SEBP6842-14 (en-us)
July 2019

Parts Manual

M320D2 Wheeled Excavator

CH91-UP (Machine)
E7A1-UP (Engine)

Powered By C7.1 Engine

PUBLICATIONS.CAT.COM

Product and Dealer Information

Note: For product identification plate locations, see the section “Product Identification Information” in the Operation and Maintenance Manual.

Delivery Date: _____

Product Information

Model: _____

Product Identification Number: _____

Engine Serial Number: _____

Transmission Serial Number: _____

Generator Serial Number: _____

Attachment Serial Numbers: _____

Attachment Information: _____

Customer Equipment Number: _____

Dealer Equipment Number: _____

Dealer Information

Name: _____ Branch: _____

Address: _____

_____

_____

	Dealer Contact	Phone Number	Hours
Sales:			
Parts:			
Service:			

MEMORANDA

TABLE OF CONTENTS

NAME	PAGE
GENERAL INFORMATION	A5
REPAIR ALTERNATIVES	A8
SUPPLEMENTAL COOLANT ADDITIVES	A9
MAINTENANCE PARTS	A10
INDEX	A13
MACHINE ARRANGEMENT	1
CHASSIS AR	1
COMMON AR	1
DISTRIBUTION AR	2
ROADING AR	4
ENGINE ARRANGEMENT	5
ENGINE AR	5
ENGINE AR-PRIMARY	6
BASIC ENGINE	8
BELT TENSIONER GP	8
CAMSHAFT GP	9
COVER GP-ACCESSORY DRIVE	10
COVER GP-VALVE MECHANISM	11
CRANKSHAFT GP	13
CYLINDER BLOCK AS	17
CYLINDER BLOCK GP	18
CYLINDER HEAD AS	19
CYLINDER HEAD GP	20
DRAIN GP-ENGINE OIL	21
DRAIN GP-OIL	22
DRIVE GP-FAN	23
EXTENSION GP-FAN	24
FASTENER GP-DAMPER & PULLEY	25
FLYWHEEL GP	26
HOUSING GP-FLYWHEEL	27
HOUSING GP-FRONT	28
JET GP-PISTON COOLING	30
LIFTING GP-ENGINE	31
MOUNTING GP-ENGINE FLEXIBLE	32
PAN GP-OIL	33
PISTON & ROD GP	34
PLUG GP-FLYWHEEL HOUSING	36
PULLEY GP-CRANKSHAFT	37
ROCKER ARM GP	38
LUBRICATION SYSTEM	41
FILLER GP-ENGINE OIL	41
FILTER GP-ENGINE OIL	42
FILTER GP-FUMES DISPOSAL	43
GAUGE GP-OIL LEVEL (DIPSTICK)	44
LINES GP-TURBOCHARGER OIL	45
PUMP GP-ENGINE OIL	46
VALVE GP-FLUID SAMPLING	48
COOLING SYSTEM	49
CONNECTION GP-HEATER	49
CONNECTION GP-WATER	50
COOLER GP-ENGINE OIL	51
COOLING AR	54
COVER GP-PROTECTION	55
FAN GP-SUCTION	56
GUARD GP-FAN	59
LINES GP-COOLANT	61
PUMP GP-WATER	63
RADIATOR & MOUNTING GP	64
TANK GP-COOLANT	66
AIR INLET AND EXHAUST SYSTEM	67
AFTERCOOLER GP-AIR	67
AIR CLEANER GP	68
LINES GP-AIR	70
LINES GP-TURBOCHARGER AIR	71
MANIFOLD GP-EXHAUST	72
MANIFOLD GP-INLET	73
MUFFLER GP	74
TURBOCHARGER GP	75
FUEL SYSTEM	77
FILTER GP-FUEL	77
FILTER GP-WATER SEP & FUEL	80
HOSE GP-REFUELING	81
INJECTOR GP-FUEL	82
LINES GP-FUEL	84
LINES GP-FUEL INJECTION	92
PUMP & MTG GP-FUEL TRANSFER	94
PUMP GP-FUEL INJECTION	95
PUMP GP-FUEL TRANSFER	97
RAIL GP-FUEL	101
TANK & MTG GP-FUEL	102
TANK GP-FUEL	103
ELECTRICAL AND STARTING SYSTEM	105
ALARM GP-TRAVEL	105
ALTERNATOR GP-CHARGING	107
BATTERY & WIRING GP	108
CONTROL & MTG GP-COMMUNICATION	112
CONTROL & MTG GP-MACHINE	113
CONTROL AR-MACHINE	115
CONTROL GP-COMMUNICATION	115
CONTROL GP-ELECTRONIC	118
CONTROL GP-UNPROGRAMMED	120
ELECTRICAL AR	125
ELECTRONICS GP-MACHINE	125
GUARD GP-ALTERNATOR	127
HARNESS AS-CAB	128
HARNESS AS-CHASSIS	134
HARNESS AS-CONSOLE	137
HARNESS AS-CONTROL	138

TABLE OF CONTENTS

NAME PAGE

HARNESS AS-ENGINE 140
HARNESS AS-LIGHTING 144
HARNESS AS-SENSOR 145
HARNESS AS-SOLENOID 146
HARNESS AS-WIRING 147
INSTALLATION AR 147
INSTALLATION AR-SECURITY 147
INSTALLATION GP-COMMUNICATION 148
INSTALLATION GP-SECURITY 156
KEY GP-ELECTRONIC 158
LAMP GP-FLOOD 159
LAMP GP-HEAD & SIGNAL 163
LAMP GP-REGISTRATION PLATE 167
LAMP GP-WARNING BEACON 168
LIGHTING GP-FLOOD 169
LIGHTING GP-ROADING 173
MONITOR & MOUNTING GP 176
MOUNTING GP-CONTROL 177
RADIO GP-COMMUNICATION 178
REFLECTOR GP 179
SENSOR & MTG GP-LIQUID LEVEL 181
SENSOR GP-ENGINE 182
STARTING AID GP 184
SWITCH GP-DISCONNECT 185
SWITCH GP-MAGNETIC 186
SWITCH GP-SHUTDOWN 190
SWIVEL GP-ELECTRIC 191
WIRING GP-CAB 192
WIRING GP-CAMERA 201
WIRING GP-CHASSIS 202
WIRING GP-CONSOLE 207
WIRING GP-ELECTRONIC CONTROL 210
WIRING GP-ENGINE 212
WIRING GP-FAN 215
WIRING GP-MONITOR 216
WIRING GP-RIDE CONTROL 217
WIRING GP-STABILIZER 218
WIRING GP-WORK TOOL 225

POWER TRAIN 226
AXLE & MTG AR-FRONT 226
AXLE & MTG AR-REAR 227
AXLE & TRANSMISSION AR 229
AXLE GP-STEERING 234
COUPLING GP-FLEXIBLE 242
POWER TRAIN AR 243
SHAFT GP-DRIVE 244
TIRE & RIM AR 247
TIRE & RIM GP 251
TRANSMISSION GP 263
UNIVERSAL JOINT GP 274

FRAME AND BODY 276
BRACKET GP-SUPPORT 276
COUNTERWEIGHT GP 277
DOOR GP-ACCESS 278
ENCLOSURE GP-ENGINE 282
ENCLOSURE GP-FUEL TANK 285
ENCLOSURE GP-RADIATOR 287
FENDER GP 288
FRAME GP-UPPER 291
GEAR & BEARING GP-SWING 294
GUARD GP-BOTTOM 299
HOOD & GUARD AR 301
INSULATION GP-SOUND SUPPR 302
LINES GP-GREASE 303
LOCK GP-TRANSPORT 304
MOUNTING GP-REGISTRATION 305
MOUNTING GP-STEP & TOOL BOX 307
PANEL GP-SOUND SUPPRESSION 308
STEP AR 310
STEP GP-TOOL BOX 311
SUPPORT GP-HOOD 314
WALKWAY GP 315

UNDERCARRIAGE 319
FRAME AS-UNDERCARRIAGE 319
FRAME GP-UNDERCARRIAGE 320
UNDERCARRIAGE AR 322

HYDRAULIC SYSTEM 323
ACCUMULATOR GP 323
ACCUMULATOR GP-BRAKE 325
ACCUMULATOR GP-HYDRAULIC 326
ACTUATOR GP-HYDRAULIC 329
ACTUATOR GP-PUMP 332
BARREL GP-MOTOR 334
BARREL GP-PUMP 335
BREATHER GP 337
CONTROL GP-BRAKE 338
COUPLING GP-PUMP 340
COVER GP-LINES 341
CYLINDER & MTG GP-AXLE LOCK 342
CYLINDER & SEAL GP-BOOM 343
CYLINDER & SEAL GP-BUCKET 348
CYLINDER & SEAL GP-STICK 351
CYLINDER GP-AXLE OSC LOCK 354
CYLINDER GP-BOOM 356
CYLINDER GP-BUCKET 358
CYLINDER GP-COUPLER 360
CYLINDER GP-HYDRAULIC 362
CYLINDER GP-STABILIZER 370
CYLINDER GP-STEERING 372
CYLINDER GP-STICK 373
DRIVE & MTG GP-PUMP 375
DRIVE GP-SWING 376
FILTER & MTG GP-OIL 381
FILTER GP-OIL 385

TABLE OF CONTENTS

NAME PAGE

FITTING GP-HYDRAULIC 390
GAUGE GP-SIGHT 394
HEAD GP-MOTOR 395
HEAD GP-PUMP 397
HYDRAULIC AR 401
HYDRAULIC AR-LOWER 403
LINES GP-AUXILIARY HYDRAULIC 404
LINES GP-BOOM 424
LINES GP-BOOM CYLINDER 440
LINES GP-CHECK VALVE 443
LINES GP-CONNECTING 462
LINES GP-COUPLER 463
LINES GP-CYLINDER 466
LINES GP-FRONT 474
LINES GP-HYDRAULIC 476
LINES GP-HYDRAULIC FAN 491
LINES GP-LOAD CONTROL VALVE 498
LINES GP-PILOT 513
LINES GP-PRESSURE TEST 525
LINES GP-PUMP 526
LINES GP-RETURN 528
LINES GP-RIDE CONTROL 535
LINES GP-STABILIZER 537
LINES GP-STEERING 547
LINES GP-STICK 549
LINES GP-SWING MOTOR 578
MOTOR & MTG GP-TRAVEL 582
MOTOR GP-GEAR 583
MOTOR GP-PISTON 586
MOTOR GP-SWING 587
PLUG GP 588
PLUG GP-CONTROL VALVE 589
PUMP & MTG GP-GEAR 591
PUMP & MTG GP-HYDRAULIC 592
PUMP & MTG GP-PILOT 593
PUMP GP-GEAR 594
PUMP GP-MAIN HYDRAULIC 597
PUMP GP-PISTON 599
ROTATING GP-MOTOR 602
ROTATING GP-PUMP 603
STABILIZER AR 605
STEERING GP-HYDRAULIC 606
SWIVEL & MOUNTING GP 608
SWIVEL GP 609
TANK & MTG GP-HYDRAULIC 613
TANK GP-HYDRAULIC 615
VALVE & LINES AR 619
VALVE & LINES AR-AUXILIARY 623
VALVE & LINES GP 626
VALVE & LINES GP-AUXILIARY 628
VALVE & LINES GP-BOOM 633
VALVE & LINES GP-CONTROL 642
VALVE & LINES GP-HEAVY LIFT 648
VALVE & LINES GP-TRAVEL CONT 649
VALVE & MTG GP-MAIN CONTROL 651
VALVE & MTG GP-SOLENOID 652
VALVE GP-BRAKE CONTROL 654
VALVE GP-CHECK 656
VALVE GP-COMBINATION 658
VALVE GP-CONTROL 661
VALVE GP-DIVERTER 669
VALVE GP-FLOW CONTROL 671
VALVE GP-LOAD CONTROL 672
VALVE GP-MAIN CONTROL 676
VALVE GP-MANUAL 680
VALVE GP-MOTOR CONTROL 681
VALVE GP-PILOT 684
VALVE GP-PUMP CONTROL 688
VALVE GP-RELIEF 694
VALVE GP-SOLENOID 703
VALVE GP-SOLENOID & PRESS REDC 723

IMPLEMENTS 725
BOOM AR 725
BOOM GP 726
BOOM GP-FORE 728
BOOM GP-STUB 730
INDICATOR GP-POSITION 732
LINES GP-GREASE 734
LINKAGE GP-BUCKET 741
PIN GP 743
PIN GP-EXCAVATOR 744
STABILIZER GP 745
STICK AR 747
STICK GP-HOE 749
VALVE GP-LUBE DISTRIBUTION 753

WORK TOOLS 755
ADJUSTER GP-BUCKET 755
BLADE & MOUNTING GP 756
BLADE AR 758
BLADE GP 759
BRACKET GP-MOUNTING 760
BUCKET & ADJUSTER GP 761
BUCKET AR-GENERAL PURPOSE 765
BUCKET AS-GENERAL PURPOSE 766
BUCKET GP-GENERAL PURPOSE 770
COUPLER AR-QUICK 773
COUPLER GP-QUICK 776
HOOK GP-LIFTING 780
LINES GP-GREASE 781
LOCK GP-QUICK COUPLER 785
PIN GP-BUCKET 789
SIDECUTTER GP 790
TIP GP-EXTRA-DUTY 791
TIP GP-GENERAL PURPOSE 792
TIP GP-PENETRATION 793
TIP GP-PENETRATION PLUS 794

TABLE OF CONTENTS

NAME PAGE

TIP-LONG 795
TIP-PENETRATION 797

OPERATOR STATION 798
AIR CONDITIONER & MOUNTING GP 798
AIR CONDITIONER AR 799
AIR CONDITIONER GP 800
ARMREST GP 802
CAB AR 804
CAB GP 804
COIL GP-EVAPORATOR 805
COMPRESSOR GP-REFRIGERANT 807
CONDENSER & MTG GP-REFRIGERANT 813
CONSOLE GP-OPERATOR 814
CONTROL & MTG GP-PEDAL 819
CONTROL AR-HANDLE 820
CONTROL GP-HANDLE 821
CONTROL GP-HEAT & AIR COND 824
CONTROL GP-HYDRAULIC HAND 825
CONTROL GP-HYDRAULIC PEDAL 826
CONTROL GP-JOYSTICK 830
CONTROL GP-PEDAL 837
CONTROL GP-PILOT OPERATED HYD 838
CONTROL PEDAL & SEAT AR 839
COVER GP-ACCESS 840
COVER GP-PLATFORM 841
DOOR & MTG GP-CAB 842
DOOR GP-CAB 843
DUCT GP-CAB AIR 844
GUARD AR-FOG LIGHTS 845
GUARD AR-OVERHEAD 846
GUARD GP-OVERHEAD 847
GUARD GP-VANDALISM 848
GUARD GP-WINDOW 850
HORN GP-ELECTRIC 854
INSTALLATION GP-RADIO 855
LEVER GP-CAB DOOR 856
LINES GP-AIR CONDITIONER 857
LINES GP-HEATER 859
LITERATURE GP 860
MIRROR GP-REAR VIEW 861
MOUNTING GP-CAB 864
MOUNTING GP-PLATFORM 865
OPERATOR AR 866
PARTS GP-DOOR 867
PEDAL GP 869
PEDAL GP-BRAKE 871
PLATE-RADIO 873
PLATFORM GP-OPERATOR 874
SCREEN GP-SUN 875
SEAT BELT GP 876
SEAT GP-SUSPENSION 877
STEERING COLUMN GP-ADJUSTABLE 881

NAME PAGE

SUPPORT GP-SEAT 882
SUSPENSION GP-SEAT 883
TANK GP-WINDOW WASHER 888
TRIM GP-CAB 889
VISOR GP-CAB 896
WINDOW GP-CAB 897
WINDOW GP-DOOR 903
WIPER GP-WINDOW 905

SERVICE EQUIPMENT AND SUPPLIES 906
BOX GP-TOOL 906
FILM GP 909
PLATE & FILM GP 913
TOOL GP 930

PART NUMBER INDEX B1

1. MACHINE IDENTIFICATION

Cat machines are identified by Product Identification Numbers (PIN). Some components included in a machine may be identified by Serial Numbers (S/N). Typical components that will be serialized include engines, transmissions, bulldozers, and rippers. The machine and engine are further identified by arrangement numbers and in some cases modification numbers. These numbers are shown on the product identification plate(s) and on the master plate in the operator's compartment.

Cat dealers need all of these numbers to determine accurate parts identification.

Effective First Quarter 2001 the Cat Product Identification Number (PIN) changed from 8 to 17 characters. In an effort to provide uniform equipment identification, Caterpillar and other construction equipment manufacturers are moving to comply with the latest version of the product identification numbering standard. Non-road machine PINs are defined by ISO 10261. The new PIN format will apply to all Cat machines and generator sets. The PIN plates and frame marking will display the 17 character PIN. The new format will look like the following:

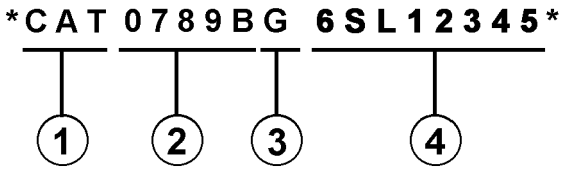

Where:

1. Caterpillar's World Manufacturing Code (characters 1-3)

2. Machine Descriptor (characters 4-8)

3. Check Character (character 9)

4. Machine Indicator Section (MIS) or Product Sequence Number (characters 10-17). These were previously referred to as the Serial Number.

Machines and generator sets produced before First Quarter 2001 will maintain their 8 character PIN format.

Components such as engines, transmissions, axles, etc. and work tools will continue to use an 8 character Serial Number (S/N).

2. ORDERING PARTS

⚠ WARNING

When replacement parts are required for this product Caterpillar recommends using Caterpillar replacement parts or parts with equivalent specifications including, but not limited to, physical dimensions, type, strength and material.

Failure to heed this warning can lead to premature failures, product damage, personal injury or death.

Quality Cat replacement parts are available from Cat dealers throughout the world. Their parts inventories are up to date and include all parts normally required to protect your investment in Cat machines. Dealers may offer repair kits or remanufactured parts to allow selection of the most effective repair alternative for a particular situation. When ordering parts, your order should specify the quantity, part number, part name, and the serial number/product identification number of the machine for which the parts are needed.

3. PARTS MANUAL ORGANIZATION

Product information in this manual is presented as "information elements" that represent all of the components for the specific model. Engine Arrangement and Seat Group are examples of information elements. The information elements are organized alphabetically by part name and secondarily by part number within each major section of the manual.

4. TABLE OF CONTENTS

A table of contents (TOC) is found at the beginning of the manual. The TOC lists each section of the manual with a complete list of all information elements organized as they appear in the manual. Page numbers are provided for quick reference to detailed parts identification illustrations and serviceable consist lists.

5. MAINTENANCE PARTS INDEX

The Maintenance Parts Index, located near the beginning of the manual, references most frequently used maintenance part numbers, providing description, quantity, usage and page number. This information is organized alphabetically by part description.

6. INDEX

The index located near the front of the manual is an alphabetical listing of all information elements included in the manual. Page numbers are provided for quick reference to detailed parts identification illustrations and serviceable consist lists.

7. PART NUMBER INDEX

A numerical index listing all part numbers and the corresponding page number(s) appears at the back of the manual.

8. CAPTIONS

Captions located at the beginning of each information element identify the part number and part name along with additional descriptive information. PIN and S/N information found in each caption should be used to select correct information for a specific machine. Field replacement options, identification of optional attachment components, and where used ("part of") information is also provided.

The first line of a caption is shown in larger type font to indicate the beginning of an information element. Captions for additional pages that may be required to illustrate an information element will be shown in standard type font and will include the term (contd.).

9. NON-SERVICED PARTS

In some instances it is necessary to display non-serviced parts that are a link to a lower level serviceable consist lists. These non-serviced part numbers are shown in italic type indicating that they are not available.

10. PARTS LIST REFERENCE NUMBERS

Numbers shown in the Ref No column correspond to numbers used in the associated graphic(s). An alphabetic suffix may be added to a reference number to identify lower level consist items. Numbers shown in the Graphic Ref column refer to the graphic number identifier displayed in the lower left corner of each illustration. The Graphic Ref number may be used in combination with the item Ref No to determine the correct part number. There may be intentional omission of a Ref No in a consist list as information is updated to reflect the latest serviceable part numbers.

11. INDENTED PART NAMES

When a part name is indented in a parts list, it is part of (included in) the group or assembly under which it is indented.

12. ILLUSTRATION REFERENCE LETTERS

When necessary, illustrations contain reference letters (A, B, C etc.) that are intended to track lines and harnesses from one point to another. They are also used to show where to reconnect illustrations that have been separated.

13. ABBREVIATIONS AND SYMBOLS

O.D. – Outside Diameter
I.D. – Inside Diameter
A – Not Part Of This Group
B – Use As Required
C – Change From Previous Type
D – Order By The Meter
E – Order By The Centimeter
F – Not Shown
G – Order By The Inch
I – Refer To Hydraulic Information System
M – Metric Part
R – Remfg Part May Be Available
Y – Separate Illustration
Z – Not Serviced Separately

14. DESCRIPTION OF TYPE CHANGES

Type - A type is defined as any configuration change that requires an additional Information Element for an Arrangement, Group, or Assembly. If serial number breaks for types are not available, a type # (Type 1, Type 2, etc.) will be displayed in the caption. These "type" changes are identified with a "C" note (change from previous type) in the Parts List. Only the "types" that apply to this Parts Manual will be included. Additional types may exist causing "C" notes to appear on an Information Element when no other types are shown.

15.<END>

This symbol indicates the end of an information element.

NOTE:

Continuing improvement and advancement of product design may cause changes to your machine which may not be included in this publication. Whenever a question arises regarding your Cat product or this publication, please consult your Cat dealer for the latest available information.

FRAME AND BODY

8E-3299 PLATFORM GP-CAB

PIN 38X1-99999

8MCS-7253 — 100090751

NOTE	REF NO	GRAPHIC REF	PART NUMBER	QTY	PART NAME 1 2 3 4 5 6 (PRODUCT LEVEL)	SEE PAGE
		1	3T-3963	1	PLATE AS	
	2	1	6H-2062	25	BOLT (3/8-16X.750IN)	
	3	1	6P-1075	41	WASHER-HARD (3MM THK)	
	4	1	9W-1444	2	SUPPORT AS-FOOT	
	5	1	9P-2229	19	BOLT (1/2-13X1IN)	
		1	9J-[illegible]	19	WASHER-HARD (4MM THK)	
	6	1	9E-8139	1	COVER AS-LH	
		1	9F-2979	5	NUT-WELD (3/8-16 THD)	
		1	1F-8189	1	CLIP	
	7	1	7E-3411	4	COVER	
	8		6J-0488	19	SCREW-HEAD (3/8-16X.875IN)	
	9	1	[illegible]074	1	COVER	
		1	9E-[illegible]		GASKET	
	10	1	9E-3249	1	[illegible]	
		1	9E-3250	1	GASKET	
	11	1	3T-3930	1	HANDHOLD	
	12	1	9E-9876	1	COVER AS	
		1	9F-2979	8	NUT-WELD (3/8-16 THD)	
		1	9E-9979	1	GASKET	
	13	1	7T-0131	1	FLOORPLATE AS	
		1	1F-0749	4	NUT-WELD (1/2-13 THD)	
	14	1	7Y-8067	1	PLUG-BUTTON	
	15	1	7T-0136	1	PLATE AS	
		1	9F-2979	5	NUT-WELD (3/8-16 THD)	
	16	1	7T-5066	1	COVER	
		1	7T-0779	1	GASKET	
	17	1	3T-3951	1	PLATE AS	
	18	1	6T-9364	4	BOLT (1/4-20X.625IN)	
M		1	6T-4206	4	WASHER-HARD (2MM THK)	
	19	1	6I-8464	1	FLOOR MAT	
	20	1	8E-8846	1	MODULE AS-OPERATOR	
	21	1	3T-3934	1	HANDHOLD	
	22	1	9P-8571	2	PLUG	
	23	2	6T-9364	4	BOLT (1/4-20X.625IN)	
M		2	6T-4206	4	WASHER-HARD (2MM THK)	
	24	2	6H-2062	17	BOLT (3/8-16X.750IN)	
	25	2	6P-1075	21	WASHER-HARD (3MM THK)	
	26	2	7T-0136	1	SEAL	
	27	2	7X-0375	2	BOLT (3/4-10X5IN)	
		2	7X-0682	2	WASHER-HARD (6MM THK)	
	28	2	3T-3462	2	PLATE	
	29	2	3T-5290	1	PLATE AS	
		2	7H-4828	6	SPACER	
	30	2	3T-5281	1	SEAL	
	31	2	7H-8917	1	GASKET	
	32	2	7H-8916	1	COVER AS	
		2	2R-2376	2	WASHER	
		2	6P-8628	2	SCREW-KNURLED	
	33	2	9W-3429	1	COVER	
	34	2	8E-9697	1	COVER	
	35	2	6D-3091	8	SCREW-SOCKET HEAD	
	36	2	9W-3142	8	MOUNTING	
	37	2	9W-9327	2	PLATE	
	38	2	7X-0390	2	BOLT (7/8-9X5IN)	
		2	7X-0672	2	WASHER-HARD	
	39	2	4L-8454	4	BOLT (3/8-16X1.0IN)	
	40	2	3T-4788	1	COVER	

12 FRAME AND BODY — 1 of 4 — SELP4570-01

FRAME AND BODY

8E-3299 PLATFORM GP-CAB (contd.) — 100090751

NOTE	REF NO	GRAPHIC REF	PART NUMBER	QTY	PART NAME 1 2 3 4 5 6 (PRODUCT LEVEL)	SEE PAGE
	41	2	8E-2515	1	COVER	
	42	2	7T-0134	1	PLATE	
	43	2	7T-0128	1	GASKET	
	44	2	7H-8724	1	GASKET	
	45	2	7H-8723	1	COVER	
	46	2	6Y-1950	2	PLUG-BUTTON	

M-METRIC PART

SELP4570-01 — 2 of 4 — FRAME AND BODY 13

FRAME AND BODY

8E-3299 PLATFORM GP-CAB (contd.) — 100090751

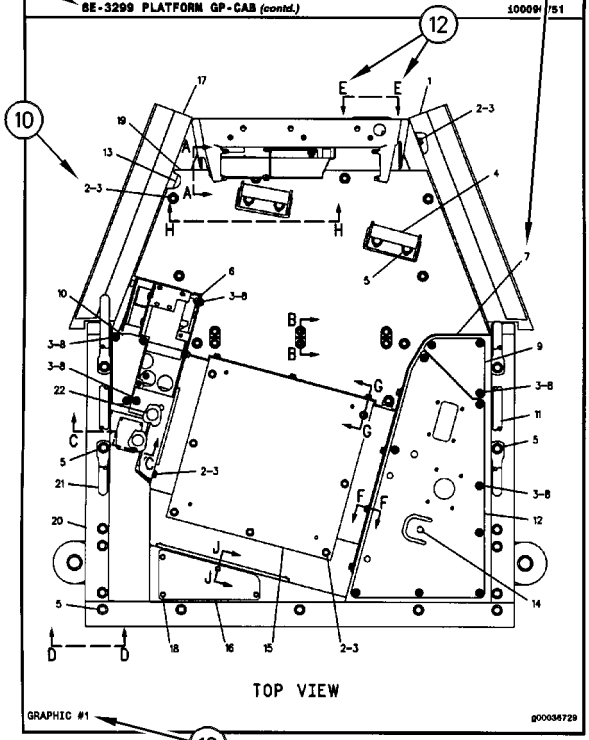

14 FRAME AND BODY — 3 of 4 — SELP4570-01

FRAME AND BODY

8E-3299 PLATFORM GP-CAB (contd.) — 100090751

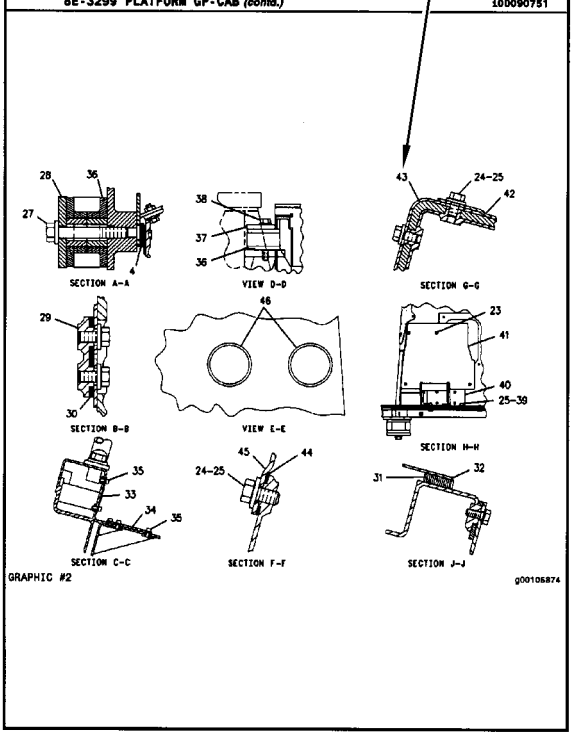

SELP4570-01 — 4 of 4 — FRAME AND BODY 15

REMANUFACTURED COMPONENTS

As an option when making repairs consider Cat Remanufactured Components. Components that are available through the Cat Remanufactured Program are identified three ways in the parts book:

- with the letter R in the note field of the parts list
- with an R* at the beginning of the first line of the caption
- with an *R at the end of the first line of the caption

Typical components included in the Remanufacturing Program include:

ALTERNATORS
CONNECTING RODS
CRANKSHAFTS - UNDERSIZE
CRANKSHAFTS - UPGRADE TO NEW
CYLINDER HEADS
ELECTRONIC CONTROL MODULES (ECM)
ELECTRONIC SENSORS
FUEL INJECTORS
FUEL NOZZLES
FUEL PUMPS
GOVERNORS
OIL PUMPS
PISTONS
SHORT BLOCKS
STARTERS
TURBOCHARGERS - COMPLETE
TURBOCHARGER CARTRIDGES
WATER PUMPS

Cat Remanufactured engines for many engine arrangements are also available.

SUPPLEMENTAL COOLANT ADDITIVES

CUSTOMER BENEFITS:

Protects against cavitation, foam, erosion, corrosion, and scale buildup in cooling systems.

- Provides measured coolant conditioner.

DESCRIPTION:

Additives deplete from the coolant with normal operation. For this reason, Supplemental Coolant Additives (SCA) must be added to all heavy duty coolants at regular intervals. In addition, when not using a fully formulated, pre-charged antifreeze, like Cat DEAC, an initial charge of SCA must be added to the cooling system. The amount of SCA added to the system is dependent on the capacity of the system.

The SCA for initial fill is provided as a liquid. SCA's for maintenance intervals are available in liquid form and as a spin-on element. (No Spin-on available for 3600 Family of Engines)

NOTE:

The amount of SCA added at initial fill is not the same as the amount added at maintenance intervals.

The coolant additive elements can be used with any ethylene or propylene glycol type antifreeze which meets ASTM D4985 or ASTM D5345 Specifications.

NOTE:

For use with standard heavy duty coolant only, not for use with Extended Life Coolant.

PARTS NEEDED:

Cooling System Capacity		Liquid SCA at Initial Fill	Liquid SCA at Maintenance*	Spin-on SCA Maintenance Element*
Liters	Gallons			
22-30	(6-8)	3P-2044 (1)	6V-3542 (1)	111-2370 (1)
30-38	(8-10)	3P-2044 (1) 6V-3542 (1)	111-2372 (1)	111-2369 (1)
38-49	(10-13)	3P-2044 (1) 8T-1589 (1)	111-2372 (1)	111-2369 (1)
49-64	(13-17)	3P-2044 (2)	8T-1589 (1)	9N-3368 (1)
64-83	(17-22)	3P-2044 (2) 8T-1589 (1)	111-2372 (1) 6V-3542 (1)	111-2371 (1)
83-114	(22-30)	3P-2044 (3) 8T-1589 (1)	3P-2044 (1)	9N-3718 (1)
114-163	(30-43)	3P-2044 (5)	3P-2044 (1) 6V-3542 (1)	111-2371 (2)
163-242	(43-64)	3P-2044 (8)	3P-2044 (2)	9N-3718 (2)

* Normal maintenance period is 250 hrs. See your Operation and Maintenance Manual for complete coolant maintenance instructions.

( ) Indicates quantity required.

MAINTENANCE PARTS

DESCRIPTION	PART NUMBER	QTY	WHERE USED	PAGE
AIR INLET AND EXHAUST SYSTEM				
FILTER ELEMENT AS-AIR (PRIMARY)	252-5001	1	AIR CLEANER GP	68
FILTER ELEMENT AS-AIR (SECONDARY)	252-5002	1	AIR CLEANER GP	68
BASIC ENGINE				
BELT-SERPENTINE	285-2040	1	DRIVE GP-FAN	23
GASKET (VALVE COVER)	388-0536	1	COVER GP-VALVE MECHANISM	11
KEY-WOODRUFF	067-6135	1	CAMSHAFT GP	9
		1	CRANKSHAFT GP	13
		1	CRANKSHAFT GP	15
SEAL (VALVE COVER)	376-4761	1	COVER GP-VALVE MECHANISM	11
COOLING SYSTEM				
CAP AS-COOLANT TANK	345-1237	1	TANK GP-COOLANT	66
CONNECTION AS (INCLUDES TEMPERATURE REGULATOR)	367-1817	1	CONNECTION GP-WATER	50
GASKET-WATER REGULATOR	281-8744	1	CONNECTION GP-WATER	50
PLUG AS-DRAIN (COOLANT TANK)	101-4639	2	LINES GP-COOLANT	61
ELECTRICAL AND STARTING SYSTEM				
BELT-DRIVE	9X-8139	1	LAMP GP-WARNING BEACON	168
FUSE (10-AMPERE)	113-8490	8	WIRING GP-CAB	192
FUSE (15-AMPERE)	113-8491	12	WIRING GP-CAB	192
FUSE (20-AMPERE)	113-8492	2	WIRING GP-CAB	192
FUSE (20-AMPERE) (GLOW PLUG)	207-1219	1	HARNESS AS-ENGINE	140
FUSE (25-AMPERE)	113-8493	2	WIRING GP-CAB	192
FUSE (5-AMPERE)	141-2759	16	WIRING GP-CAB	192
FUSE (60-AMPERE) (START)	232-6314	2	HARNESS AS-ENGINE	140
FUSE (80-AMPERE) (ALTERNATOR)	232-6315	2	HARNESS AS-ENGINE	140
FUSE (80-AMPERE) (MAIN)	232-6315	1	BATTERY & WIRING GP	108
GLOW PLUG (24-VOLT)	462-2235	6	STARTING AID GP	184
KEY (BATTERY DISCONNECT)	8H-5306	1	SWITCH GP-DISCONNECT	185
KEY AS-ELECTRONIC (SECURITY)	206-5162	2	KEY GP-ELECTRONIC	158
LAMP (24-VOLT, 4-WATT) (HEADLIGHT)	209-4853	1	LAMP GP-HEAD & SIGNAL	163
		1	LAMP GP-HEAD & SIGNAL	165
LAMP (24-VOLT, 5-WATT) (REGISTRATION PLATE)	5C-9583	1	LAMP GP-REGISTRATION PLATE	167
LAMP (24-VOLT, 5-WATT) (STICK)	202-7201	1	LIGHTING GP-ROADING	175
LAMP (24-VOLT, 70-WATT) (WARNING BEACON)	9X-7849	1	LAMP GP-WARNING BEACON	168
LAMP (24-VOLT, 75/70-WATT) (HEADLIGHT)	211-7560	1	LAMP GP-HEAD & SIGNAL	163
		1	LAMP GP-HEAD & SIGNAL	165
LAMP GP-SIGNAL (LED, REAR)	288-8631	2	LIGHTING GP-ROADING	173
LAMP-HALOGEN (24-VOLT, 70-WATT)	351-9918	1	LAMP GP-FLOOD	161
		1	LAMP GP-FLOOD	162

MAINTENANCE PARTS

DESCRIPTION	PART NUMBER	QTY	WHERE USED	PAGE
LAMP-HALOGEN (24-VOLT, 70-WATT) (FLOODLIGHT)	351-9918	1	LAMP GP-FLOOD	160
	9X-3463	1	LAMP GP-FLOOD	159
LAMP-TURN SIGNAL (24-VOLT, 21-WATT) (AMBER)	242-0588	1	LAMP GP-HEAD & SIGNAL	163
		1	LAMP GP-HEAD & SIGNAL	165
FRAME AND BODY				
SPRING-GAS	116-6325	2	DOOR GP-ACCESS	279
		1	SUPPORT GP-HOOD	314
FUEL SYSTEM				
CAP AS-FUEL (LOCKABLE, VENTED)	7X-7700	1	TANK GP-FUEL	103
FILTER AS-WATER SEP & FUEL	439-5037	1	FILTER GP-WATER SEP & FUEL	80
FILTER ELEMENT-FUEL	360-8960	1	FILTER GP-FUEL	77
KEY	5P-8500	1	TANK GP-FUEL	103
PLUG AS-DRAIN (FUEL TANK)	101-4639	1	TANK GP-FUEL	103
SCREEN AS (REFUELING)	5W-8656	1	HOSE GP-REFUELING	81
STRAINER-FUEL	9P-7121	1	TANK GP-FUEL	103
HYDRAULIC SYSTEM				
BREATHER AS	432-6061	1	TANK GP-HYDRAULIC	617
CAP AS (BREATHER) (HYDRAULIC TANK)	194-7849	1	TANK GP-HYDRAULIC	615
ELEMENT AS	442-0106	2	LINES GP-HYDRAULIC	488
	442-0109	1	FILTER & MTG GP-OIL	383
FILTER AS-ENGINE OIL	443-1365	2	LINES GP-RETURN	531
FILTER AS-OIL	443-1366	1	LINES GP-HYDRAULIC FAN	495
FILTER ELEMENT AS-OIL (HYDRAULIC) (FAN MOTOR)	229-2800	1	LINES GP-HYDRAULIC FAN	491
FILTER ELEMENT-OIL (ADVANCED EFFICIENCY) (HYDRAULIC, PILOT)	361-7480	1	FILTER GP-OIL	386
FILTER ELEMENT-OIL (ADVANCED EFFICIENCY) (SWING CIRCUIT)	361-7480	1	FILTER GP-OIL	385
FILTER ELEMENT-OIL (HYDRAULIC OIL RETURN)	8U-0723	1	FILTER GP-OIL	389
FILTER ELEMENT-OIL (ULTRA HIGH EFFICIENCY) (HYDRAULIC)	137-7249	1	FILTER GP-OIL	387
FILTER-ELEMENT	445-2651	1	FILTER GP-OIL	388
PLUG AS-DRAIN (HYDRAULIC TANK)	101-4639	1	TANK GP-HYDRAULIC	615
		1	TANK GP-HYDRAULIC	617
SCREEN-FILTER	322-6691	1	VALVE GP-SOLENOID & PRESS REDC	724
IMPLEMENTS				
FILTER-GREASE (BOOM, STICK CYLINDER BEARING)	168-3158	1	LINES GP-GREASE	735
		1	LINES GP-GREASE	738

MAINTENANCE PARTS

DESCRIPTION	PART NUMBER	QTY	WHERE USED	PAGE
LUBRICATION SYSTEM				
CAP AS-FILLER (ENGINE OIL)	359-1309	1	FILLER GP-ENGINE OIL	41
FILTER-ENGINE OIL	462-1171	1	FILTER GP-ENGINE OIL	42
FILTER-FUMES DISPOSAL	273-5711	1	FILTER GP-FUMES DISPOSAL	43
OPERATOR STATION				
CAP-VENTED (WINDOW WASHER TANK)	322-4964	1	TANK GP-WINDOW WASHER	888
DRYER AS-REFRIGERANT (RECEIVER)	176-1902	1	LINES GP-AIR CONDITIONER	857
FILTER AS-AIR (AIR CONDITIONER)	293-1137	1	AIR CONDITIONER GP	800
FILTER ELEMENT-CAB AIR	245-7823	1	AIR CONDITIONER GP	800
	293-1184	1	DUCT GP-CAB AIR	844
FILTER GP-CAB AIR	293-1183	1	DUCT GP-CAB AIR	844
LAMP (24-VOLT, 10-WATT)	201-4417	1	TRIM GP-CAB	889
LAMP AS-DOME	176-1986	1	TRIM GP-CAB	889
SEAT BELT GP (RETRACTABLE, 48-MM)	205-6210	1	SEAT GP-SUSPENSION	877
		1	SEAT GP-SUSPENSION	879
V-BELT (COMPRESSOR)	275-4909	1	COMPRESSOR GP-REFRIGERANT	810
V-BELT (REFRIGERANT COMPRESSOR)	466-9072	1	COMPRESSOR GP-REFRIGERANT	808
POWER TRAIN				
BREATHER (TRANSMISSION)	238-4683	1	TRANSMISSION GP	263
FILTER ELEMENT-OIL (TRANSMISSION)	147-5044	1	TRANSMISSION GP	264
PLUG AS-MAGNET (AXLE HOUSING)	263-3630	1	AXLE & TRANSMISSION AR	230
		1	AXLE GP-STEERING	236
SERVICE EQUIPMENT AND SUPPLIES				
KEY	5P-8500	3	PLATE & FILM GP	919
		1	PLATE & FILM GP	919
		3	PLATE & FILM GP	924
		1	PLATE & FILM GP	924
WORK TOOLS				
BLADE AS-WIPER (900-MM)	248-7990	1	BLADE GP	759
FILTER-GREASE (BOOM, STICK CYLINDER BEARING)	168-3158	1	LINES GP-GREASE	782

INDEX

NAME PAGE

A

ACCUMULATOR GP-BRAKE–CHARGED 325
ACCUMULATOR GP-HYDRAULIC–CHARGED. . . 327
ACCUMULATOR GP-HYDRAULIC–UNCHARGED 326, 328
ACCUMULATOR GP–CHARGED. 324
ACCUMULATOR GP–UNCHARGED. 323
ACTUATOR GP (VARIABLE ADJUSTABLE BOOM) 661
ACTUATOR GP-HYDRAULIC 329, 330, 331
ACTUATOR GP-PUMP. 332, 333
ADJUSTER GP-BUCKET 755
AFTERCOOLER GP-AIR 67
AIR CLEANER GP 68, 69
AIR CONDITIONER & MOUNTING GP. 798
AIR CONDITIONER AR 799
AIR CONDITIONER GP 800
ALARM GP-TRAVEL. 105
ALTERNATOR GP-CHARGING 107
ARMREST GP 802, 803
ARMREST GP–LH. 802
ARMREST GP–RH. 803
AXLE & MTG AR-FRONT 226
AXLE & MTG AR-REAR 227
AXLE & TRANSMISSION AR. 229
AXLE GP-STEERING 234

B

BARREL GP-MOTOR 334
BARREL GP-PUMP. 335
BATTERY & WIRING GP 108
BATTERY GP (12-VOLT, MAINTENANCE FREE, WET) 108
BELT TENSIONER GP. 8
BELT-DRIVE 168
BELT-SERPENTINE. 23
BLADE & MOUNTING GP 756
BLADE AR. 758
BLADE AS-WIPER (900-MM) 759
BLADE GP. 756, 759
BOOM AR 725
BOOM GP-FORE–VARIABLE ADJUSTABLE 728
BOOM GP-STUB–VARIABLE ADJUSTABLE 730
BOOM GP–1-PIECE 726
BOX GP-TOOL. 906
BOX GP-TOOL–STEP. 908
BRACKET GP-MOUNTING–REAR VIEW, CAMERA. 760
BRACKET GP-SUPPORT–ENGINE COMPARTMENT DOOR LATCH. 276
BREATHER (TRANSMISSION). 263
BREATHER AS. 617
BREATHER GP 337
BRIDGE GP-VALVE 40
BUCKET & ADJUSTER GP–GENERAL PURPOSE 761, 763, 764
BUCKET & ADJUSTER GP–GENERAL PURPOSE, B-FAMILY. 762
BUCKET AR-GENERAL PURPOSE 765
BUCKET AS-GENERAL PURPOSE 766, 767, 769
BUCKET AS-GENERAL PURPOSE–GENERAL DUTY. 768
BUCKET GP-GENERAL PURPOSE 770, 772
BUCKET GP-GENERAL PURPOSE–QUICK COUPLER 771

C

CAB AR 804
CAB GP 804
CAMSHAFT GP 9
CAP AS (BREATHER) (HYDRAULIC TANK). . . . 615
CAP AS-COOLANT TANK. 66
CAP AS-FILLER (ENGINE OIL). 41
CAP AS-FUEL (LOCKABLE, VENTED) 103
CAP-VENTED (WINDOW WASHER TANK) 888
CHASSIS AR. 1
CLAMP GP-HYDRAULIC LINES 424, 426, 428, 430, 432, 434, 436, 438, 446, 449, 452, 457, 482, 499, 502, 506, 510, 535, 635, 638
CLAMP GP-HYDRAULIC LINES (LOGGING). . . . 443, 455, 460
CLAMP GP-HYDRAULIC LINES (SINGLE). 443, 455
CLAMP GP-HYDRAULIC LINES (TWIN SPIKE). 443, 455, 460

INDEX

NAME PAGE

CLIP 38
COIL GP-EVAPORATOR 805
COMMON AR 1
COMPRESSOR GP-REFRIGERANT 807
808
810
812
CONDENSER & MTG GP-REFRIGERANT 813
CONNECTING ROD GP 34
CONNECTION AS (INCLUDES TEMPERATURE REGULATOR) 50
CONNECTION GP-AIR 73
CONNECTION GP-HEATER 49
CONNECTION GP-WATER 50
CONSOLE GP-OPERATOR 816
CONSOLE GP-OPERATOR–LH 814
CONSOLE GP-OPERATOR–RH 817
CONTROL & MTG GP-COMMUNICATION–PRODUCT LINK 522, CHINA 112
CONTROL & MTG GP-MACHINE 113
114
CONTROL & MTG GP-PEDAL–HAMMER 819
CONTROL AR-HANDLE–JOYSTICK 820
CONTROL AR-HANDLE–JOYSTICK WITH SLIDE CONTROL 820
CONTROL AR-HANDLE–JOYSTICK, 3-FUNCTION 820
CONTROL AR-MACHINE 115
CONTROL GP-BRAKE 338
CONTROL GP-COMMUNICATION–PRODUCT LINK 321SR 116
CONTROL GP-COMMUNICATION–PRODUCT LINK CELLULAR, CHINA 115
CONTROL GP-ELECTRONIC 119
126
CONTROL GP-ELECTRONIC–PL641E CELLULAR 118
CONTROL GP-HANDLE–HOOD RELEASE 822
CONTROL GP-HANDLE–WITH SLIDE CONTROL 821
CONTROL GP-HANDLE–WITH TWO SLIDE CONTROLS 823
CONTROL GP-HEAT & AIR COND–AIR INLET 824
CONTROL GP-HYDRAULIC HAND–STABILIZER BLADE 825
CONTROL GP-HYDRAULIC PEDAL 826
CONTROL GP-HYDRAULIC PEDAL–TRAVEL . . . 828
CONTROL GP-JOYSTICK 830
831
832
833
834
835
836
CONTROL GP-PEDAL–TRAVEL 837
CONTROL GP-PILOT OPERATED HYD 838
CONTROL GP-UNPROGRAMMED 120
124

NAME PAGE

CONTROL GP-UNPROGRAMMED (MACHINE) 125
CONTROL GP-UNPROGRAMMED (PRODUCT LINK 300) 120
CONTROL GP-UNPROGRAMMED–PL631 SATELLITE 123
CONTROL GP-UNPROGRAMMED–PRODUCT LINK 522 121
122
CONTROL PEDAL & SEAT AR 839
COOLER GP-ENGINE OIL 51
53
COOLING AR 54
CORE AS-HEATER 800
COUNTERWEIGHT GP 277
COUPLER AR-QUICK 775
COUPLER AR-QUICK–B-LINKAGE 775
COUPLER AR-QUICK–HYDRAULIC 773
COUPLER AR-QUICK–MECHANICAL 774
COUPLER GP-QUICK 779
COUPLER GP-QUICK–B-LINKAGE 776
COUPLING GP 94
99
COUPLING GP-FLEXIBLE 242
COUPLING GP-PUMP 340
COVER GP-ACCESSORY DRIVE 10
COVER GP-ACCESS–STORAGE 840
COVER GP-CAB 864
COVER GP-LINES 341
COVER GP-PLATFORM 841
COVER GP-PROTECTION–HYDRAULIC FAN 55
COVER GP-VALVE MECHANISM 11
12
CRANKSHAFT GP 13
15
CYLINDER & MTG GP-AXLE LOCK 342
CYLINDER & SEAL GP-BOOM 343
344
345
346
CYLINDER & SEAL GP-BUCKET 348
CYLINDER & SEAL GP-BUCKET–BUCKET 349
CYLINDER & SEAL GP-STICK 351
352
CYLINDER BLOCK AS 17
CYLINDER BLOCK GP 18
CYLINDER GP-AXLE OSC LOCK 354
CYLINDER GP-BOOM 356
CYLINDER GP-BUCKET 358
CYLINDER GP-COUPLER 360
361
785
CYLINDER GP-HYDRAULIC 366
368
CYLINDER GP-HYDRAULIC–DOZER ANGLE . . . 362
364
CYLINDER GP-STABILIZER 370
CYLINDER GP-STEERING 372
CYLINDER GP-STICK 373
CYLINDER HEAD AS 19
CYLINDER HEAD GP 20

INDEX

NAME PAGE

D

DISTRIBUTION AR 2
3
4
DOOR & MTG GP-CAB. 842
DOOR GP-ACCESS–ENGINE. 279
DOOR GP-ACCESS–PILOT MANIFOLD 278
281
DOOR GP-CAB 843
DOOR GP-TOOL BOX. 908
DRAIN GP-ENGINE OIL 21
DRAIN GP-OIL–ENGINE 22
DRIVE & MTG GP-PUMP. 375
DRIVE GP-FAN 23
DRIVE GP-SWING. 376
377
DRYER AS-REFRIGERANT (RECEIVER). 857
DUCT GP-CAB AIR. 844

E

ELECTRICAL AR 125
ELECTRICAL AR–CAB 125
ELECTRONICS GP-ENGINE. 7
ELECTRONICS GP-MACHINE 125
126
ELEMENT AS 383
488
ENCLOSURE GP-ENGINE 282
ENCLOSURE GP-FUEL TANK. 285
ENCLOSURE GP-RADIATOR. 287
ENGINE AR. 5
ENGINE AR-PRIMARY 6
EXTENSION GP-FAN 24

F

FAN GP-SUCTION–AFTERCOOLER. 57
58
FAN GP-SUCTION–ENGINE COOLANT,
HYDRAULIC OIL 56
FASTENER GP-DAMPER & PULLEY 25
FENDER GP 288
FILLER GP-ENGINE OIL 41
FILM GP. 910
FILM GP–1-PIECE BOOM. 911
FILM GP–MINERAL-BASED HYDRAULIC OIL. . . 909
FILM GP–VARIABLE ADJUSTABLE BOOM 912
FILM-IDENTIFICATION (CAT, LH). 911
912
FILM-IDENTIFICATION (CAT, RH) 911
912
FILM-IDENTIFICATION (CAT). 122
910
919
924
FILM-IDENTIFICATION (CATERPILLAR) 919
924

NAME PAGE

FILM-IDENTIFICATION (FUSE PANEL). 919
924
FILM-IDENTIFICATION (FUSE, RELAY
PANEL) 919
924
FILM-IDENTIFICATION (HYDRAULIC OIL) 909
FILM-IDENTIFICATION (IGNITION SWITCH) 156
FILM-IDENTIFICATION (JOYSTICK CONTROL,
READ OMM) 820
834
FILM-IDENTIFICATION (JOYSTICK
CONTROL). 820
835
FILM-IDENTIFICATION (LABEL) 119
FILM-IDENTIFICATION (LIFT EYE
LOCATION) 919
924
FILM-IDENTIFICATION (LIFT EYE, TIE-DOWN
LOCATION) 919
924
FILM-IDENTIFICATION (PRESSURE TAP). 919
924
FILM-IDENTIFICATION (RELAY PANEL). 919
924
FILM-IDENTIFICATION (SMARTBOOM). 633
FILM-IDENTIFICATION (STRIPE, LH) 919
924
FILM-IDENTIFICATION (STRIPE, RH) 919
924
FILM-IDENTIFICATION (TIE-DOWN). 919
924
FILM-INFORMATION (24-VOLT) 919
924
FILM-INFORMATION (DRY AIR CLEANER). 919
924
FILM-INFORMATION (EXTENDED LIFE
COOLANT). 919
924
FILM-INFORMATION (OPERATOR CONTROLS,
READ OMM) 628
832
FILM-INFORMATION (PRODUCT LINK, READ
OMM). 112
116
148
913
FILM-INSTRUCTION (AIR CONDITIONER, READ
OMM). 857
FILM-INSTRUCTION (ALTERNATE EXIT). 919
924
FILM-INSTRUCTION (BATTERY
DISCONNECT) 919
924
FILM-INSTRUCTION (ENGINE SHUTOFF). 919
924
FILM-INSTRUCTION (FUEL, READ OMM). 919
924
FILM-INSTRUCTION (HYDRAULIC HAMMER) . . 819
FILM-INSTRUCTION (HYDRAULIC OIL LEVEL
CHECK) 911
912

INDEX

NAME PAGE

FILM-INSTRUCTION (MACHINE SECURITY, CONSOLE) . . . 156
FILM-INSTRUCTION (NO STEP) . . . 919, 924
FILM-INSTRUCTION (OPERATOR CONTROLS, READ OMM) . . . 833
FILM-INSTRUCTION (OPERATOR CONTROLS) . . . 919
FILM-INSTRUCTION (PULL RING, ALTERNATE EXIT) . . . 919, 924
FILM-INSTRUCTION (REFUELING) . . . 97, 100
FILM-INSTRUCTION (STEERING WHEEL TILT CONTROL) . . . 804
FILM-INSTRUCTION (SWING LOCK) . . . 919, 924
FILM-INSTRUCTION (VARIABLE ADJUSTABLE BOOM) . . . 636, 638
FILM-NOTICE (LIFT EYE LOCATION) . . . 773, 774
FILM-WARNING (CRUSH HAZARD, CAB, READ OMM) . . . 916
FILM-WARNING (CRUSH HAZARD, READ OMM, INTL) . . . 916
FILM-WARNING (CRUSH HAZARD, READ OMM, U.S.) . . . 913
FILM-WARNING (CRUSH HAZARD, STAY BACK, INTL) . . . 916, 919, 924
FILM-WARNING (CRUSH HAZARD, STAY BACK, U.S.) . . . 913
FILM-WARNING (DO NOT OPERATE, READ OMM) . . . 773, 774
FILM-WARNING (DO NOT SPRAY, READ OMM) . . . 918
FILM-WARNING (DO NOT USE ETHER, U.S.) . . . 913
FILM-WARNING (ELECTRICAL HAZARD, READ OMM) . . . 916
FILM-WARNING (EXPLOSION HAZARD, PRODUCT LINK) . . . 112, 116, 148
FILM-WARNING (FAN, READ OMM) . . . 916
FILM-WARNING (FRONT GUARD, READ OMM) . . . 846, 850
FILM-WARNING (HIGH PRESS CYLINDER, READ OMM) . . . 913, 916
FILM-WARNING (HIGH PRESSURE CYLINDER) . . . 323, 326, 328
FILM-WARNING (HOT FLUID UNDER PRESS) . . . 916
FILM-WARNING (HOT FLUID UNDER PRESSURE, U.S.) . . . 913
FILM-WARNING (JUMP START, READ OMM, INTL) . . . 916
FILM-WARNING (JUMP START, READ OMM, U.S.) . . . 913
FILM-WARNING (MACHINE SWING, CRUSHING, INTL) . . . 916
FILM-WARNING (MACHINE SWING, CRUSHING, U.S.) . . . 913
FILM-WARNING (NO CLRN, NO HAND, READ OMM) . . . 913
FILM-WARNING (NO ETHER SPRAY/AIR INTK, INTL) . . . 916
FILM-WARNING (NO WELD, NO DRILL, READ OMM) . . . 847, 850, 852, 919, 924
FILM-WARNING (POWER LINES CLEARANCE) . . . 913
FILM-WARNING (PRODUCT LINK 300, U.S.) . . . 116, 148, 913
FILM-WARNING (READ OMM) . . . 776
FILM-WARNING (SEAT BELT, INTERNATIONAL) . . . 916
FILM-WARNING (SEAT BELT) . . . 913
FILM-WARNING (TIGHTEN WHEEL BOLTS, OMM, INTL) . . . 916
FILM-WARNING (TIGHTEN WHEEL BOLTS, OMM, U.S.) . . . 913
FILM-WARNING (TIPPING HAZARD, READ OMM) . . . 913, 916
FILM-WARNING (TOP GUARD, READ OMM) . . . 845, 846, 847
FILM-WARNING (UNIVERSAL WARNING) . . . 918
FILM-WARNING (UNIVERSAL, READ OMM) . . . 916
FILM-WARNING (UNIVERSAL, U.S.) . . . 913
FILTER & MTG GP-OIL . . . 383
FILTER & MTG GP-OIL–HYDRAULIC . . . 381
FILTER AS-AIR (AIR CONDITIONER) . . . 800
FILTER AS-ENGINE OIL . . . 531
FILTER AS-OIL . . . 495
FILTER AS-WATER SEP & FUEL . . . 80
FILTER ELEMENT AS-AIR (PRIMARY) . . . 68
FILTER ELEMENT AS-AIR (SECONDARY) . . . 68
FILTER ELEMENT AS-OIL (HYDRAULIC) (FAN MOTOR) . . . 491
FILTER ELEMENT-CAB AIR . . . 800, 844
FILTER ELEMENT-FUEL . . . 77
FILTER ELEMENT-OIL (ADVANCED EFFICIENCY) (HYDRAULIC, PILOT) . . . 386
FILTER ELEMENT-OIL (ADVANCED EFFICIENCY) (SWING CIRCUIT) . . . 385

INDEX

NAME PAGE

FILTER ELEMENT-OIL (HYDRAULIC OIL RETURN) . . . 389
FILTER ELEMENT-OIL (TRANSMISSION) . . . 264
FILTER ELEMENT-OIL (ULTRA HIGH EFFICIENCY) (HYDRAULIC) . . . 387
FILTER GP-CAB AIR . . . 844
FILTER GP-ENGINE OIL . . . 42
FILTER GP-ENGINE OIL (PILOT) . . . 488
FILTER GP-FUEL . . . 77, 78, 79
FILTER GP-FUMES DISPOSAL . . . 43
FILTER GP-GREASE (BOOM, STICK CYLINDER BEARING) . . . 735, 738, 782
FILTER GP-OIL . . . 386, 388
FILTER GP-OIL (HYDRAULIC) . . . 383
FILTER GP-OIL (HYDRAULIC) (FAN MOTOR) . . . 491
FILTER GP-OIL–HYDRAULIC . . . 387, 389
FILTER GP-OIL–HYDRAULIC, SWING CIRCUIT . . . 385
FILTER GP-WATER SEP & FUEL . . . 80
FILTER-ELEMENT . . . 388
FILTER-ENGINE OIL . . . 42
FILTER-FUMES DISPOSAL . . . 43
FILTER-GREASE (BOOM, STICK CYLINDER BEARING) . . . 735, 738, 782
FITTING GP-HYDRAULIC–GRAPPLE ROTATE . . . 391
FITTING GP-HYDRAULIC–QUICK DISCONNECT . . . 390, 392, 393
FLOOR MAT (PLATFORM) . . . 874
FLYWHEEL GP . . . 26
FRAME AS-UNDERCARRIAGE–BLADE, STABILIZER . . . 319
FRAME GP-UNDERCARRIAGE–BLADE, STABILIZER . . . 320
FRAME GP-UNDERCARRIAGE–FRONT BLADE, REAR STABILIZER . . . 321
FRAME GP-UPPER . . . 291
FUSE (10-AMPERE) . . . 192
FUSE (15-AMPERE) . . . 192
FUSE (20-AMPERE) . . . 192
FUSE (20-AMPERE) (GLOW PLUG) . . . 140
FUSE (25-AMPERE) . . . 192
FUSE (5-AMPERE) . . . 192
FUSE (60-AMPERE) (START) . . . 140
FUSE (80-AMPERE) (ALTERNATOR) . . . 140
FUSE (80-AMPERE) (MAIN) . . . 108

NAME PAGE

G

GASKET (VALVE COVER) . . . 11
GASKET-WATER REGULATOR . . . 50
GAUGE (SIGHT GLASS) (COOLANT TANK) . . . 66
GAUGE GP-OIL LEVEL (DIPSTICK) . . . 44
GAUGE GP-SIGHT . . . 394
GEAR & BEARING GP-SWING . . . 294, 296, 297, 298
GLOW PLUG (24-VOLT) . . . 184
GUARD AR-FOG LIGHTS . . . 845
GUARD AR-OVERHEAD . . . 846
GUARD GP-ALTERNATOR . . . 127
GUARD GP-BOTTOM . . . 299
GUARD GP-FAN–AFTERCOOLER . . . 60
GUARD GP-FAN–ENGINE COOLANT, HYDRAULIC OIL . . . 59
GUARD GP-OVERHEAD . . . 847
GUARD GP-VANDALISM . . . 848
GUARD GP-WINDOW . . . 850, 852

H

HARNESS AS-CAB . . . 130, 132
HARNESS AS-CAB–FUSE, RELAY . . . 128
HARNESS AS-CAB–ROOF . . . 131
HARNESS AS-CHASSIS . . . 136
HARNESS AS-CHASSIS (ELECTRONIC) . . . 206
HARNESS AS-CHASSIS–ELECTRONIC . . . 134
HARNESS AS-CONSOLE . . . 207
HARNESS AS-CONSOLE (STABILIZER) . . . 218
HARNESS AS-CONSOLE–SEAT . . . 137
HARNESS AS-CONTROL . . . 138
HARNESS AS-CONTROL (IMPLEMENT) . . . 210
HARNESS AS-CONTROL (SECURITY) . . . 156
HARNESS AS-CONTROL–PRODUCT LINK 321SR . . . 139
HARNESS AS-ENGINE . . . 140, 143
HARNESS AS-ENGINE–ECM . . . 141
HARNESS AS-FRONT LIGHTING . . . 172
HARNESS AS-HEATER & AIR COND . . . 800
HARNESS AS-HEATER & AIR COND (CONTROL PANEL SWITCHES) . . . 798
HARNESS AS-LIGHTING . . . 169
HARNESS AS-LIGHTING (LICENSE PLATE) . . . 305
HARNESS AS-LIGHTING–CAB FLOODLIGHT . . . 144
HARNESS AS-LIGHTING–LICENSE PLATE . . . 144
HARNESS AS-PLATFORM . . . 212
HARNESS AS-SENSOR . . . 197
HARNESS AS-SENSOR (FAN SPEED) . . . 215
HARNESS AS-SENSOR (PUMP) . . . 199
HARNESS AS-SENSOR–FAN SPEED . . . 145
HARNESS AS-SENSOR–RIDE CONTROL . . . 146
HARNESS AS-SENSOR–TRAVEL SPEED . . . 145
HARNESS AS-SOLENOID (FAN) . . . 215

NAME PAGE

HARNESS AS-SOLENOID–UNDERCARRIAGE. 146
HARNESS AS-STARTING AID. 184
HARNESS AS-WIRING. 143
HARNESS AS-WIRING (AIR CONDITIONER) . . . 798
HARNESS AS-WIRING (CAMERA, REAR). 216
HARNESS AS-WIRING–INJECTOR. 147
HARNESS AS-WORK TOOL 225
HEAD GP-MOTOR. 395
HEAD GP-PUMP 397
399
HOOD & GUARD AR. 301
HOOK GP-LIFTING 780
HORN GP-ELECTRIC. 854
HOSE GP-REFUELING 81
HOUSING GP-AXLE (LH) 237
HOUSING GP-AXLE (RH). 237
HOUSING GP-FILTER 383
HOUSING GP-FLYWHEEL 27
HOUSING GP-FRONT 28
HUB GP-WHEEL 230
HYDRAULIC AR. 401
HYDRAULIC AR-LOWER. 403
HYDRAULIC AR–HAMMER. 401
HYDRAULIC AR–MEDIUM PRESSURE FUNCTION. 402
HYDRAULIC AR–MULTIFUNCTION CONTROL VALVE. 401
HYDRAULIC AR–UPPER. 402

I

INDICATOR GP-POSITION–RIDE CONTROL, FOREBOOM 733
INDICATOR GP-POSITION–RIDE CONTROL, STUB BOOM 732
INJECTOR GP-FUEL 82
83
INSTALLATION AR 147
INSTALLATION AR-SECURITY 147
INSTALLATION GP-COMMUNICATION–PL631 SATELLITE. 154
INSTALLATION GP-COMMUNICATION–PL641 CELLULAR. 150
152
INSTALLATION GP-COMMUNICATION–PRODUCT LINK. 148
INSTALLATION GP-RADIO 855
INSTALLATION GP-SECURITY 156
INSULATION GP-SOUND SUPPR 302

J

JET GP-PISTON COOLING 30

NAME PAGE

K

KEY 103
919
924
KEY (BATTERY DISCONNECT) 185
KEY AS-ELECTRONIC (SECURITY) 158
KEY GP-ELECTRONIC–MACHINE SECURITY SYSTEM 158
KEY-WOODRUFF. 9
13
15
KIT-PLUNGER (PEDAL). 826
828
KIT-REGULATOR (WITH SPRING) (PEDAL CONTROL). 826

L

LAMP (24-VOLT, 10-WATT) 889
LAMP (24-VOLT, 4-WATT) (HEADLIGHT) 163
165
LAMP (24-VOLT, 5-WATT) (REGISTRATION PLATE) 167
LAMP (24-VOLT, 5-WATT) (STICK) 175
LAMP (24-VOLT, 70-WATT) (WARNING BEACON) 168
LAMP (24-VOLT, 75/70-WATT) (HEADLIGHT). . . 163
165
LAMP AS-DOME 889
LAMP GP-FLOOD 159
160
161
162
LAMP GP-HEAD & SIGNAL–FRONT, LH 163
LAMP GP-HEAD & SIGNAL–FRONT, RH. 165
LAMP GP-REGISTRATION PLATE. 167
LAMP GP-ROADING (24-VOLT, 5-WATT) 175
LAMP GP-SIGNAL (LED, REAR) 173
LAMP GP-WARNING BEACON–AMBER. 168
LAMP-HALOGEN (24-VOLT, 70-WATT). 161
162
LAMP-HALOGEN (24-VOLT, 70-WATT) (FLOODLIGHT) 159
160
LAMP-TURN SIGNAL (24-VOLT, 21-WATT) (AMBER). 163
165
LEVER GP-CAB DOOR. 856
LIFTING GP-ENGINE 31
LIGHTING GP-FLOOD–BOOM 169
LIGHTING GP-FLOOD–CAB 170
171
LIGHTING GP-FLOOD–CAB GUARD. 172
LIGHTING GP-ROADING–LED. 173
LIGHTING GP-ROADING–STICK LAMP 175
LINES GP-AIR 70
LINES GP-AIR CONDITIONER 857
LINES GP-AUXILIARY HYDRAULIC–1-PIECE BOOM, MEDIUM PRESSURE 404

INDEX

NAME PAGE

LINES GP-AUXILIARY HYDRAULIC–1-PIECE BOOM, QUICK COUPLER 405
LINES GP-AUXILIARY HYDRAULIC–1-PIECE, MED PRESSURE, QCPLR. 407
LINES GP-AUXILIARY HYDRAULIC–HIGH PRESSURE FUNCTION, 1-PIECE BOOM 414
LINES GP-AUXILIARY HYDRAULIC–VA BOOM, MEDIUM PRESSURE 409
LINES GP-AUXILIARY HYDRAULIC–VARIABLE ADJ, HIGH PRESSURE 416
LINES GP-AUXILIARY HYDRAULIC–VARIABLE ADJ, QUICK COUPLER. 410
418
LINES GP-AUXILIARY HYDRAULIC–VARIABLE ADJUSTABLE 420
422
LINES GP-AUXILIARY HYDRAULIC–VARIABLE ADJUSTABLE BOOM 412
LINES GP-BOOM CYLINDER. 440
LINES GP-BOOM–1-PIECE 424
426
432
438
LINES GP-BOOM–VARIABLE ADJ, HIGH PRESSURE 436
LINES GP-BOOM–VARIABLE ADJUSTABLE 428
430
434
LINES GP-CHECK VALVE–1-PIECE, HIGH PRESSURE FLOW 460
LINES GP-CHECK VALVE–STICK CYLINDER . . 443
LINES GP-CHECK VALVE–STICK CYLINDER, 1-PIECE BOOM 446
455
LINES GP-CHECK VALVE–STICK CYLINDER, VAR ADJ BOOM 449
452
457
LINES GP-CONNECTING 462
LINES GP-COOLANT 61
LINES GP-COUPLER 465
LINES GP-COUPLER–B-LINKAGE 463
LINES GP-CYLINDER. 468
470
LINES GP-CYLINDER–BLADE, REAR 466
LINES GP-CYLINDER–REAR BLADE. 472
LINES GP-FRONT 474
475
LINES GP-FUEL. 84
86
87
88
90
LINES GP-FUEL INJECTION 92
93
LINES GP-GREASE 734
739
781
LINES GP-GREASE–1-PIECE. 738
LINES GP-GREASE–BLADE 782
LINES GP-GREASE–DOZER ANGLE. 784

NAME PAGE

LINES GP-GREASE–OSCILLATING AXLE PIN. 303
LINES GP-GREASE–SWING GEAR 734
LINES GP-GREASE–VARIABLE ADJUSTABLE 735
LINES GP-GREASE–VARIABLE ADJUSTABLE BOOM 737
LINES GP-HEATER. 859
LINES GP-HYDRAULIC 476
478
488
LINES GP-HYDRAULIC FAN 491
495
LINES GP-HYDRAULIC–2-CIRCUITS 482
LINES GP-HYDRAULIC–4 CIRCUITS. 485
LINES GP-LOAD CONTROL VALVE 498
LINES GP-LOAD CONTROL VALVE–BOOM CYLINDER 502
506
510
LINES GP-LOAD CONTROL VALVE–STICK CYLINDER, VAR ADJ BOOM 499
LINES GP-PILOT–OPERATOR. 515
LINES GP-PILOT–PLATFORM TRAVEL 513
LINES GP-PILOT–PLATFORM, BRAKE. 517
LINES GP-PILOT–RETURN OIL 522
LINES GP-PILOT–UPPER 523
LINES GP-PILOT–VA BOOM CYLINDER 520
LINES GP-PRESSURE TEST. 525
LINES GP-PUMP 526
LINES GP-RETURN 528
531
LINES GP-RIDE CONTROL–VARIABLE ADJUSTABLE BOOM 535
LINES GP-STABILIZER–FRONT 537
544
LINES GP-STABILIZER–REAR. 540
LINES GP-STEERING. 547
LINES GP-STICK 549
550
574
LINES GP-STICK–AUX HYD, MEDIUM PRESSURE 559
LINES GP-STICK–AUX HYD, QUICK COUPLER 551
553
LINES GP-STICK–AUXILIARY HYD, MEDIUM PRESSURE 563
LINES GP-STICK–AUXILIARY HYDRAULIC 561
565
567
569
LINES GP-STICK–BUCKET CYLINDER. 571
573
LINES GP-STICK–DIVERTER VALVE 555
557
576
LINES GP-SWING MOTOR. 578
580
LINES GP-TURBOCHARGER AIR 71
LINES GP-TURBOCHARGER OIL. 45

INDEX

NAME PAGE

LINKAGE GP-BUCKET 741
LITERATURE GP 1
860
LOCK GP-QUICK COUPLER–HYDRAULIC 785
LOCK GP-QUICK COUPLER–MECHANICAL 787
LOCK GP-TRANSPORT–TRAVEL 304

M

MANIFOLD GP-EXHAUST 72
MANIFOLD GP-INLET 73
MIRROR GP-REAR VIEW–FRONT, RH 861
MIRROR GP-REAR VIEW–RIGHT FRONT 863
MODULE GP-INTERFACE (KEY) 156
MONITOR & MOUNTING GP 176
MOTOR & MTG GP-TRAVEL 582
MOTOR GP-GEAR–HYDRAULIC FAN 583
584
MOTOR GP-PISTON–TRAVEL 586
MOTOR GP-SWING 587
MOTOR GP-WINDOW WIPER (24-VOLT) 905
MOUNTING GP-CAB 864
MOUNTING GP-CONTROL 177
MOUNTING GP-ENGINE FLEXIBLE 32
MOUNTING GP-PLATFORM 865
MOUNTING GP-REGISTRATION–WITH WIRING, LIGHTS 305
MOUNTING GP-STEP & TOOL BOX 307
MUFFLER GP 74

O

OPERATOR AR 866

P

PADLOCK GP 103
919
924
PAN GP-OIL 33
PANEL GP-SOUND SUPPRESSION 308
309
PARTS GP-DOOR 867
PEDAL GP-BRAKE 871
PEDAL GP–ELECTRONIC 869
PIN GP-BUCKET 789
PIN GP-EXCAVATOR 744
PIN GP–COUPLER 743
PISTON & ROD GP 34
PISTON GP 34
PLATE & FILM GP 918
919
924
929
PLATE & FILM GP–ENGLISH 913
PLATE & FILM GP–INTERNATIONAL 916
PLATE-IDENTIFICATION (CAT) 918
PLATE-RADIO 873

NAME PAGE

PLATFORM GP-OPERATOR 874
PLUG AS-DRAIN (COOLANT TANK) 61
PLUG AS-DRAIN (FUEL TANK) 103
PLUG AS-DRAIN (HYDRAULIC TANK) 615
617
PLUG AS-MAGNET (AXLE HOUSING) 230
236
PLUG GP 609
654
658
663
PLUG GP-CONNECTOR (64-PIN) 143
PLUG GP-CONTROL VALVE 589
590
663
PLUG GP-CONTROL VALVE (GENERATOR) . . . 659
PLUG GP-FLYWHEEL HOUSING 36
PLUG GP-SWIVEL 609
PLUG GP–HYDRAULIC TANK 588
POWER TRAIN AR 243
PULLER-FUSE 192
PULLEY GP-CRANKSHAFT 37
PUMP & MOTOR GP (FUEL TRANSFER) 94
PUMP & MOTOR GP (HYDRAULIC TANK) 99
PUMP & MTG GP-FUEL TRANSFER 94
PUMP & MTG GP-GEAR 591
PUMP & MTG GP-HYDRAULIC 592
PUMP & MTG GP-PILOT–BRAKE, STEERING 593
PUMP GP-CHARGE 599
PUMP GP-ENGINE OIL 46
47
PUMP GP-FUEL INJECTION 95
96
PUMP GP-FUEL TRANSFER 97
99
100
PUMP GP-GEAR 596
PUMP GP-GEAR–AUX, BRAKE, PILOT, STEERING 595
PUMP GP-GEAR–HYDRAULIC FAN 594
PUMP GP-MAIN HYDRAULIC 597
PUMP GP-METERING (HMU) 547
PUMP GP-PISTON 601
PUMP GP-PISTON–SWING, CHARGE 599
PUMP GP-WATER 63

R

RADIATOR & MOUNTING GP 64
RADIO GP-COMMUNICATION–PRODUCT LINK 121SR 178
RAIL GP-FUEL 101
REFLECTOR GP 179
RELAY (24-VOLT) (BEACON) 192
RELAY (24-VOLT) (BOOM LIGHTS) 192
RELAY (24-VOLT) (BRAKE LIGHT) 192
RELAY (24-VOLT) (FRONT CAB FLOODLIGHTS) 192
RELAY (24-VOLT) (HIGH BEAM, LH) 192

NAME PAGE

RELAY (24-VOLT) (HIGH BEAM, RH) 192
RELAY (24-VOLT) (HORN) 192
RELAY (24-VOLT) (IMPLEMENT LOCKOUT) . . . 192
RELAY (24-VOLT) (LOW BEAM, LH) 192
RELAY (24-VOLT) (LOW BEAM, RH) 192
RELAY (24-VOLT) (POSITION LAMP, LH) 192
RELAY (24-VOLT) (POSITION LAMP, RH) 192
RELAY (24-VOLT) (TRAVEL ALARM) 105
RELAY (24-VOLT) (WIPER CUT-OUT) 192
RELAY (BLOWER) 824
RELAY (COMPRESSOR CLUTCH) 824
RELAY AS (24-VOLT) (WIPER) 192
ROADING AR 4
ROCKER ARM GP 38
40
ROTATING GP-MOTOR 602
ROTATING GP-PUMP–BASIC 603

S

SCREEN AS (REFUELING) 81
SCREEN GP-SUN 875
SCREEN-FILTER 724
SEAL (VALVE COVER) 11
SEAT BELT GP (RETRACTABLE, 48-MM) 877
879
SEAT BELT GP–RETRACTABLE, 2-IN 876
SEAT GP-SUSPENSION–COMFORT 877
SEAT GP-SUSPENSION–FABRIC 879
SENSOR (FUEL RAIL PRESSURE) 101
SENSOR & MTG GP-LIQUID LEVEL–FUEL TANK 181
SENSOR AS-SPEED (FAN) 584
SENSOR AS-SPEED (TRANSMISSION OUTPUT) 263
SENSOR AS-TEMPERATURE (AIR) 824
SENSOR AS-TEMPERATURE (AMBIENT AIR TEMP) 800
SENSOR AS-TEMPERATURE (COOLANT) 800
SENSOR GP-ENGINE 6
182
183
SENSOR GP-FUEL LEVEL 181
SENSOR GP-LIQUID LEVEL 80
SENSOR GP-PRESSURE (BRAKE CONTROL) (BRAKE OIL) 338
SENSOR GP-PRESSURE (ENGINE OIL) 182
183
SENSOR GP-PRESSURE (INLET MANIFOLD AIR) 182
183
SENSOR GP-PRESSURE (PILOT OIL) 686
SENSOR GP-SPEED (ENGINE) 182
183
SENSOR-PRESSURE (LOWERING CONTROL) 506
SENSOR-PRESSURE (OVERLOAD WARNING) 502
510
633
SENSOR-PRESSURE (RIDE CONTROL) 324
328
SENSOR-PRESSURE (ROD END) 535
SENSOR-TEMPERATURE (2-PIN) 617
SENSOR-TEMPERATURE (2-PIN) (AIR INLET MANIFOLD) 182
183
SENSOR-TEMPERATURE (2-PIN) (COOLANT) 182
183
SENSOR-TEMPERATURE (2-PIN) (HYDRAULIC OIL) 615
SENSOR-TEMPERATURE (AMBIENT AIR) 798
SHAFT GP-DRIVE 246
SHAFT GP-DRIVE–CARRIER BEARING 244
SHAFT GP-MOTOR 602
SIDECUTTER GP 790
SOFTWARE GP-COMMUNICATION (PRODUCT LINK 121SR) 178
SOFTWARE GP-MACHINE 125
126
SOFTWARE GP-MONITOR 121
176
SOFTWARE GP-MONITOR (CELLULAR) 118
SOFTWARE GP-MONITOR (PRODUCT LINK 522) 122
SOFTWARE GP-MONITOR (SATELLITE RADIO) 123
SOLENOID 73
693
703
706
711
714
SOLENOID (BLADE) 705
SOLENOID (MULTIFUNCTION COMBINED VALVE) 658
659
SOLENOID (QUICK COUPLER) 668
SOLENOID (STABILIZER) 704
SOLENOID (TRANSMISSION GEAR) 708
SPRING AS-GAS 814
SPRING AS-GAS (GUARD, FRONT) 850
852
SPRING-GAS 279
281
314
STABILIZER AR 605
STABILIZER AR–REAR 605
STABILIZER GP 745
STARTING AID GP 184
STARTING MOTOR GP-ELECTRIC 5
STEERING COLUMN GP-ADJUSTABLE 881
STEERING GP-HYDRAULIC 606
STEP AR 310
STEP GP-TOOL BOX 311
313
STICK AR 747
748
STICK GP-HOE 749
751

INDEX

NAME PAGE

STRAINER-FUEL 103
SUPPORT GP-HOOD 314
SUPPORT GP-LINES 88
90
SUPPORT GP-SEAT 882
SUSPENSION GP-SEAT 879
886
SUSPENSION GP-SEAT–COMFORT 883
SWITCH AS (REFUELING PUMP RELAY) 97
100
SWITCH AS (WINDOW LOWER LIMIT) 900
SWITCH AS-MAGNETIC (24-VOLT) (STARTER RELAY) 188
SWITCH AS-MAGNETIC (HAZARD FLASHER RELAY) 173
SWITCH AS-MULTIFUNCTION (HYDRAULIC STEERING) 606
SWITCH AS-POSITION (ARMREST) 209
SWITCH AS-POSITION (JOYSTICK) 207
SWITCH AS-PRESSURE 633
686
SWITCH AS-PRESSURE (BRAKE OIL) 338
SWITCH AS-PRESSURE (REFRIGERANT) 857
SWITCH AS-ROCKER (FLOODLIGHT) 197
199
SWITCH AS-ROCKER (HAZARD WARNING LIGHTS) 197
199
SWITCH AS-ROCKER (HEADLIGHT) 197
199
SWITCH AS-ROCKER (LEFT STABILIZER) 466
468
470
472
538
541
544
SWITCH AS-ROCKER (RADIO ON, OFF) 855
SWITCH AS-ROCKER (RIGHT STABILIZER) . . . 538
541
544
SWITCH AS-START (KEY) (ENGINE) 207
209
SWITCH GP-DISCONNECT–BATTERY 185
SWITCH GP-MAGNETIC 186
187
188
SWITCH GP-MAGNETIC (24-VOLT) 97
SWITCH GP-MAGNETIC (24-VOLT) (ECM) 108
SWITCH GP-MAGNETIC (24-VOLT) (FUEL TRANSFER PUMP) 100
SWITCH GP-MAGNETIC (24-VOLT) (MAIN POWER RELAY) 192
SWITCH GP-MAGNETIC (24-VOLT) (START RELAY) 108
186
SWITCH GP-MAGNETIC–GLOW PLUG RELAY 189
SWITCH GP-PRESSURE 617

NAME PAGE

SWITCH GP-PRESSURE (HYDRAULIC TANK, FILTER) 615
SWITCH GP-SHUTDOWN 190
SWITCH-PRESSURE (INLET AIR RESTRICTION) 69
SWIVEL & MOUNTING GP 608
SWIVEL GP 609
610
611
SWIVEL GP-ELECTRIC 191

T

TANK & MTG GP-FUEL 102
TANK & MTG GP-HYDRAULIC 613
614
TANK GP-COOLANT 66
TANK GP-FUEL 103
TANK GP-HYDRAULIC 615
617
TANK GP-WINDOW WASHER 888
TIE ROD GP (LH) 236
TIE ROD GP (RH) 237
TIP GP-EXTRA-DUTY 791
TIP GP-GENERAL PURPOSE–K-80 792
TIP GP-LONG (J-300) 765
TIP GP-PENETRATION PLUS–K-80 794
TIP GP-PENETRATION–K-80 793
TIP-LONG–J-350 795
TIP-LONG–J-350, HEAVY-DUTY 796
TIP-PENETRATION PLUS (K-80) 794
TIP-PENETRATION–J-350, HEAVY-DUTY 797
TIRE & RIM AR 247
248
249
250
TIRE & RIM GP 253
254
259
260
261
262
TIRE & RIM GP–LH 255
256
TIRE & RIM GP–RH 251
252
257
258
TOOL GP 930
TRANSMISSION GP 263
TRIM GP-CAB 889
892
894
TURBOCHARGER GP 75
76

U

UNDERCARRIAGE AR 322

NAME PAGE

UNDERCARRIAGE AR–FRONT BLADE, REAR STABILIZER. 322
UNIVERSAL JOINT GP 236
274
275

V

V-BELT (COMPRESSOR) 810
V-BELT (REFRIGERANT COMPRESSOR) 808
VALVE & LINES AR. 619
VALVE & LINES AR-AUXILIARY–HAMMER. 623
VALVE & LINES AR-AUXILIARY–MULTIFUNCTION CONTROL VALVE 625
VALVE & LINES AR–1-PIECE 621
VALVE & LINES AR–1-PIECE, HIGH PRESSURE FLOW 621
622
VALVE & LINES AR–VARIABLE ADJ, HIGH PRESSURE 622
VALVE & LINES AR–VARIABLE ADJUSTABLE CYLINDER 620
621
VALVE & LINES GP-AUXILIARY. 628
VALVE & LINES GP-AUXILIARY–DRIFT REDUCTION 630
VALVE & LINES GP-BOOM. 633
VALVE & LINES GP-BOOM–DRIFT REDUCTION 640
VALVE & LINES GP-BOOM–VARIABLE ADJUSTABLE BOOM CYLINDER 635
VALVE & LINES GP-BOOM–VARIABLE ADJUSTABLE CYLINDER 638
VALVE & LINES GP-CONTROL 642
646
VALVE & LINES GP-CONTROL–DRIFT REDUCTION, BUCKET. 644
VALVE & LINES GP-HEAVY LIFT 648
VALVE & LINES GP-TRAVEL CONT–FAST TRAVEL 649
VALVE & LINES GP–QUICK COUPLER. 626
VALVE & MTG GP-MAIN CONTROL. 651
VALVE & MTG GP-SOLENOID–MEDIUM PRESSURE, AUXILIARY 652
VALVE AS-PRESSURE RELIEF (REFRIGERANT COMPRESSOR) 812
VALVE AS-PRESSURE RELIEF (REFRIGERANT) 807
VALVE AS-RELIEF 665
VALVE AS-RELIEF (125-BAR 1813-PSI). 665
VALVE AS-RELIEF (140-BAR, 2031-PSI) 665
VALVE AS-RELIEF (63-BAR, 914-PSI) 665
VALVE AS-RELIEF (80-BAR, 1160-PSI) 665
VALVE AS-RELIEF (AUX, BRAKE, PILOT, STEERING) 596
VALVE AS-RELIEF (DOWNSHIFT INHIBITOR) 264
VALVE GP-BALL (FUEL SHUTOFF) 84
VALVE GP-BRAKE CONTROL. 338

NAME PAGE

VALVE GP-BRAKE CONTROL–HYDRAULIC MOTOR. 654
VALVE GP-CHECK 656
VALVE GP-CHECK (AXLE OSC LOCK CYLINDER) 354
VALVE GP-CHECK (BOOM LOWERING CONTROL, LH) 502
506
VALVE GP-CHECK (BOOM LOWERING CONTROL, RH). 502
506
VALVE GP-CHECK (IMPLEMENT LOWERING). 721
VALVE GP-CHECK (PILOT OPERATED) 361
446
449
452
455
457
460
635
VALVE GP-CHECK (PILOT OPERATED) (STICK CYLINDER) 443
499
VALVE GP-CHECK (QUICK COUPLER). 626
VALVE GP-COMBINATION–MULTIFUNCTION. . . 658
VALVE GP-CONTROL 667
VALVE GP-CONTROL (QUICK COUPLER) 626
VALVE GP-CONTROL–HYDRAULIC HAMMER 663
VALVE GP-CONTROL–MEDIUM PRESSURE FUNCTION. 665
VALVE GP-CONTROL–QUICK COUPLER 668
VALVE GP-CONTROL–VA BOOM. 661
VALVE GP-DIRECTIONAL CONTROL (AUTOMATIC ENGINE SPEED CONTROL) 721
VALVE GP-DIVERTER 669
670
VALVE GP-FLOW CONTROL. 671
676
VALVE GP-FLOW CONTROL (BOOM LOWERING CONTROL, LH). 502
506
VALVE GP-FLOW CONTROL (BOOM LOWERING CONTROL, RH) 502
506
VALVE GP-FLUID SAMPLING 48
VALVE GP-LOAD CONTROL 672
674
VALVE GP-LUBE DISTRIBUTION (12-INJECTOR) 784
VALVE GP-LUBE DISTRIBUTION–11-INJECTOR 753
VALVE GP-LUBE DISTRIBUTION–7-INJECTOR 754
VALVE GP-MAIN CONTROL 676
VALVE GP-MANUAL–AUXILIARY, SHUTOFF . . . 680
VALVE GP-MOTOR CONTROL–PRESSURE, FLOW COMPENSATOR 681
VALVE GP-MOTOR CONTROL–TRAVEL 683
VALVE GP-PILOT 686

INDEX

NAME PAGE

VALVE GP-PILOT–JOYSTICK. 684
VALVE GP-PRESSURE REDUCING (PILOT) . . . 721
VALVE GP-PRIORITY (MAIN) (STEERING). 547
VALVE GP-PUMP CONTROL. 691
693
VALVE GP-PUMP CONTROL–HORSEPOWER CONTROL 690
VALVE GP-PUMP CONTROL–PRESSURE COMPENSATOR 689
VALVE GP-PUMP CONTROL–SWING. 688
VALVE GP-RELIEF 697
699
700
701
702
VALVE GP-RELIEF (CROSSOVER, MAKEUP) 395
VALVE GP-RELIEF (LINE, VARIABLE ADJUSTABLE BOOM) 661
VALVE GP-RELIEF (LINE) (HAMMER) 663
VALVE GP-RELIEF–CROSSOVER 695
698
VALVE GP-RELIEF–LINE. 694
VALVE GP-RELIEF–STEERING HIGH PRESSURE CUTOFF 696
VALVE GP-SHUTTLE (STICK CYLINDER). 455
VALVE GP-SHUTTLE (STICK CYLINDER) (STICK CYLINDER) 443
446
449
452
457
460
500
VALVE GP-SOLENOID. 544
703
704
705
706
708
709
710
711
712
713
714
715
716
719
720
VALVE GP-SOLENOID (BLADE) 466
468
470
472
VALVE GP-SOLENOID (CONTROL ACTION) . . . 665
VALVE GP-SOLENOID (FAST TRAVEL). 649
VALVE GP-SOLENOID (HEAVY LIFT). 721
VALVE GP-SOLENOID (HYDRAULIC FAN MOTOR) 584

NAME PAGE

VALVE GP-SOLENOID (IMPLEMENT LOCKOUT). 721
VALVE GP-SOLENOID (JOYSTICK STEER, HYD CAB RISER) 715
716
VALVE GP-SOLENOID (MEDIUM PRESSURE FUNCTION) 665
VALVE GP-SOLENOID (MEDIUM PRESSURE, AUXILIARY) 652
VALVE GP-SOLENOID (MULTIFUNCTION CONTROL VALVE) 658
VALVE GP-SOLENOID (OSCILLATING AXLE) 721
VALVE GP-SOLENOID (PILOT OPERATED). . . . 686
VALVE GP-SOLENOID (RIDE CONTROL, HEAD END, LH) 535
VALVE GP-SOLENOID (RIDE CONTROL, HEAD END, RH). 535
VALVE GP-SOLENOID (RIDE CONTROL) 535
712
713
717
VALVE GP-SOLENOID (SMARTBOOM, BOOM LOAD CONTROL) 633
VALVE GP-SOLENOID (SMARTBOOM) 710
VALVE GP-SOLENOID (STABILIZER) 537
540
VALVE GP-SOLENOID (SWING BRAKE) 721
VALVE GP-SOLENOID (TRANSMISSION GEAR). 721
VALVE GP-SOLENOID & PRESS REDC 723
724
VALVE GP-SOLENOID & PRESS REDC (CREEPER SPEED) (TRAVEL MOTOR). 718
VALVE GP-SOLENOID & PRESS REDC (HAMMER ENABLE). 663
VALVE GP-SOLENOID & PRESS REDC (MULTIFUNCTION CONTROL VALVE) 658
VALVE GP-SOLENOID & RELIEF (MULTIFUNCTION CONTROL VALVE) 658
659
VALVE GP-SOLENOID–PILOT 721
VALVE GP-SOLENOID–RIDE CONTROL 717
VALVE GP-SOLENOID–TRAVEL MOTOR. 718
VALVE GP-THROTTLE (BOOM, STICK). 676
VALVE GP-THROTTLE (BUCKET, BLADE/STB, TRAVEL). 676
VALVE GP-THROTTLE (VARIABLE ADJUSTABLE BOOM) 661
VISOR GP-CAB 896

W

WALKWAY GP 315
317
WINDOW GP-CAB. 899
900
WINDOW GP-CAB–FRONT, LOWER 897
WINDOW GP-DOOR. 903
WIPER GP-WINDOW 905

INDEX

NAME	PAGE
WIRING GP-CAB	195
	197
	199
WIRING GP-CAB–FUSE, RELAY	192
WIRING GP-CAMERA–UPPER	201
WIRING GP-CHASSIS–ELECTRIC	204
WIRING GP-CHASSIS–ELECTRONIC	206
WIRING GP-CHASSIS–ENGINE ECM	202
WIRING GP-CONSOLE	207
	209
WIRING GP-ELECTRONIC CONTROL	210
WIRING GP-ENGINE	212
	213
	214
WIRING GP-FAN	215
WIRING GP-MONITOR–CAMERA, REAR	216
WIRING GP-RIDE CONTROL	217
WIRING GP-STABILIZER–FRONT & REAR, LH & RH	218
WIRING GP-STABILIZER–UNDERCARRIAGE	219
WIRING GP-WORK TOOL–MULTIFUNCTION COMBINED VALVE	225

MEMORANDA

449-2824 CHASSIS AR

S/N: CH91-UP
PART OF 449-2823 COMMON AR
ALSO AN ATTACHMENT

SMCS-7000 **i06267052**

NOTE	PART NUMBER	QTY	PART NAME 1 2 3 4 5 6 (PRODUCT LEVEL)	SEE PAGE
Y	*466-9093*	1	AIR CONDITIONER AR	799
			—OR—	
Y	*466-9070*	1	AIR CONDITIONER AR	799
Y	*111-1858*	1	DRIVE GP-SWING	376
Y	*340-6880*	1	FRAME GP-UPPER	291
Y	*190-8206*	1	GEAR & BEARING GP-SWING	294
Y	*340-6886*	1	GUARD GP-BOTTOM	299
Y	*454-3395*	1	HOOD & GUARD AR	301
Y	*111-1857*	1	LITERATURE GP	860
Y	*450-2079*	1	MOUNTING GP-PLATFORM	865
Y	*453-7074*	1	PLATE & FILM GP	919
Y	*454-2156*	1	STEP AR	310
Y	*252-9828*	1	TANK & MTG GP-FUEL	102

Y - SEPARATE ILLUSTRATION

<END>

449-2823 COMMON AR

S/N: CH91-UP
PART OF 453-8185, 517-3262 DISTRIBUTION AR
ALSO AN ATTACHMENT

SMCS-7000 **i06508414**

NOTE	PART NUMBER	QTY	PART NAME 1 2 3 4 5 6 (PRODUCT LEVEL)	SEE PAGE
Y	*396-6834*	1	CAB AR	804
Y	*449-2824*	1	CHASSIS AR	1
Y	*454-7364*	1	COOLING AR	54
Y	*396-4423*	1	ELECTRICAL AR	125
Y	*482-4529*	1	ENGINE AR	5
Y	*253-2270*	1	FILM GP (MINERAL-BASED HYDRAULIC OIL)	909
Y	*449-2784*	1	HYDRAULIC AR (UPPER)	402
Y	*354-7286*	1	HYDRAULIC AR-LOWER	403
Y	*354-7270*	1	INSTALLATION AR	147
Y	*453-7111*	1	POWER TRAIN AR	243

Y - SEPARATE ILLUSTRATION

<END>

453-8185 DISTRIBUTION AR

S/N: CH91-UP

AN ATTACHMENT

SMCS-7000 **i06861640**

NOTE	PART NUMBER	QTY	PART NAME 1 2 3 4 5 6 (PRODUCT LEVEL)	SEE PAGE
Y	*278-5284*	1	ALARM GP-TRAVEL	105
Y	*449-2823*	1	COMMON AR	1
Y	*425-9130*	1	BOOM AR (WITHOUT AUTOLUBE)	725
Y	*453-8180*	1	CAB AR	804
Y	*252-9836*	1	COUNTERWEIGHT GP	277
Y	*391-2634*	1	COVER GP-LINES	341
Y	*261-3608*	1	COVER GP-PLATFORM	841
Y	*445-2355*	1	HYDRAULIC AR (HAMMER)	401
Y	**108-1029**	1	LAMP GP-WARNING BEACON (24-VOLT) (AMBER)	168
Y	*418-8768*	1	LINES GP-STICK (AUXILIARY HYDRAULIC)	569
Y	*333-0122*	1	MIRROR GP-REAR VIEW (FRONT, RH)	863
Y	*123-4968*	1	PIN GP-BUCKET	789
			—OR—	
Y	*123-4801*	1	PIN GP-EXCAVATOR (BUCKET)	744
Y	*253-2262*	1	PLATE & FILM GP (INTERNATIONAL)	916
Y	*374-0829*	1	PUMP GP-FUEL TRANSFER	97
			—OR—	
Y	*475-4069*	1	PUMP GP-FUEL TRANSFER	100
Y	*454-8156*	1	STICK AR (WITHOUT AUTOLUBE)	748
Y	*443-7807*	1	TIRE & RIM AR	248
Y	*426-2551*	1	UNDERCARRIAGE AR (FRONT BLADE, REAR STABILIZER)	322
Y	*425-3925*	1	VALVE & LINES AR (1-PIECE BOOM, STICK CYLINDER)	619
Y	*454-2118*	1	VALVE & LINES AR (1-PIECE, HIGH PRESSURE FLOW)	621
	262-2781	1	PLATE-RADIO	
	423-8892	1	PLATE-RADIO	

Y - SEPARATE ILLUSTRATION

<END>

473-2841 DISTRIBUTION AR

S/N: CH91-UP

AN ATTACHMENT

SMCS-7000 **i06861638**

NOTE	PART NUMBER	QTY	PART NAME 1 2 3 4 5 6 (PRODUCT LEVEL)	SEE PAGE
Y	*278-5284*	1	ALARM GP-TRAVEL	105
Y	*425-9130*	1	BOOM AR	725
Y	*453-8180*	1	CAB AR	804
Y	*453-7073*	1	CONTROL & MTG GP-COMMUNICATION	112
Y	*252-9836*	1	COUNTERWEIGHT GP	277
Y	*391-2634*	1	COVER GP-LINES	341
Y	*261-3608*	1	COVER GP-PLATFORM	841
Y	*463-8753*	1	FENDER GP	288
Y	*445-2355*	1	HYDRAULIC AR (HAMMER)	401
Y	**108-1029**	1	LAMP GP-WARNING BEACON (24-VOLT)	168
Y	*418-8768*	1	LINES GP-STICK (AUXILIARY HYDRAULIC)	569
Y	*333-0122*	1	MIRROR GP-REAR VIEW (FRONT, RH)	863
Y	*123-4801*	1	PIN GP-EXCAVATOR (BUCKET)	744
Y	*253-2262*	1	PLATE & FILM GP (INTERNATIONAL)	916
Y	*475-2030*	1	PLATE & FILM GP	929
Y	*475-4069*	1	PUMP GP-FUEL TRANSFER	100
Y	*454-8156*	1	STICK AR	748
Y	*473-2842*	1	TIRE & RIM AR	249
Y	*426-2551*	1	UNDERCARRIAGE AR (FRONT BLADE, REAR STABILIZER)	322
Y	*425-3925*	1	VALVE & LINES AR (1-PIECE BOOM, STICK CYLINDER)	619
Y	*454-2118*	1	VALVE & LINES AR (1-PIECE, HIGH PRESSURE FLOW)	621
	262-2781	1	PLATE-RADIO	
	423-8892	1	PLATE-RADIO	

Y - SEPARATE ILLUSTRATION

<END>

517-3262 DISTRIBUTION AR

S/N: CH91-UP

AN ATTACHMENT

SMCS-7000 **i06816246**

NOTE	PART NUMBER	QTY	PART NAME 1 2 3 4 5 6 (PRODUCT LEVEL)	SEE PAGE
Y	*278-5284*	1	ALARM GP-TRAVEL	105
Y	*425-9130*	1	BOOM AR	725
Y	*453-8180*	1	CAB AR	804
Y	*449-2823*	1	COMMON AR	1
Y	*252-9836*	1	COUNTERWEIGHT GP	277
Y	*391-2634*	1	COVER GP-LINES	341
Y	*261-3608*	1	COVER GP-PLATFORM	841
Y	*445-2355*	1	HYDRAULIC AR (HAMMER)	401
Y	**108-1029**	1	LAMP GP-WARNING BEACON (24-VOLT)	168
Y	*418-8768*	1	LINES GP-STICK (AUXILIARY HYDRAULIC)	569
Y	*333-0122*	1	MIRROR GP-REAR VIEW (FRONT, RH)	863
Y	*123-4801*	1	PIN GP-EXCAVATOR (BUCKET)	744
Y	*253-2262*	1	PLATE & FILM GP (INTERNATIONAL)	916
Y	*475-4069*	1	PUMP GP-FUEL TRANSFER	100
Y	*454-8156*	1	STICK AR	748
Y	*490-6073*	1	TIRE & RIM AR	250
Y	*426-2551*	1	UNDERCARRIAGE AR (FRONT BLADE, REAR STABILIZER)	322
Y	*425-3925*	1	VALVE & LINES AR (1-PIECE BOOM, STICK CYLINDER)	619
Y	*454-2118*	1	VALVE & LINES AR (1-PIECE, HIGH PRESSURE FLOW)	621
	262-2781	1	PLATE-RADIO	
	423-8892	1	PLATE-RADIO	

Y - SEPARATE ILLUSTRATION

<END>

453-3264 ROADING AR

S/N: CH91-UP

AN ATTACHMENT

SMCS-7000 **i05820369**

NOTE	PART NUMBER	QTY	PART NAME 1 2 3 4 5 6 (PRODUCT LEVEL)	SEE PAGE
Y	*422-9765*	1	LIGHTING GP-ROADING (STICK LAMP)	175
Y	*359-4768*	1	MOUNTING GP-REGISTRATION (WITH WIRING, LIGHTS)	305

Y - SEPARATE ILLUSTRATION

<END>

441-0100 ENGINE AR

S/N: CH91-UP
PART OF 482-4529 ENGINE AR
ALSO AN ATTACHMENT

SMCS-1000 **i05938717**

NOTE	PART NUMBER	QTY	PART NAME 1 2 3 4 5 6 (PRODUCT LEVEL)	SEE PAGE
Y	*446-6728*	1	ENGINE AR-PRIMARY	6
M	**175-7141**	3	NUT-HEX FLANGE (M10X1.5-THD)	
R	**225-3150**	1	STARTING MOTOR GP-ELECTRIC	
M	**6I-0364**	3	STUD (M10X1.5X45-MM)	

M - METRIC PART
R - REMANUFACTURED PART MAY BE AVAILABLE
Y - SEPARATE ILLUSTRATION

<END>

482-4529 ENGINE AR

S/N: CH91-UP
PART OF 449-2823 COMMON AR
ALSO AN ATTACHMENT

SMCS-1000 **i06502218**

NOTE	PART NUMBER	QTY	PART NAME 1 2 3 4 5 6 (PRODUCT LEVEL)	SEE PAGE
Y	*441-0100*	1	ENGINE AR	5
Y	*392-2508*	1	LINES GP-FUEL	84
Y	*478-6537*	1	MUFFLER GP	74
Y	*432-8257*	1	PUMP & MTG GP-HYDRAULIC	592

Y - SEPARATE ILLUSTRATION

<END>

446-6728 ENGINE AR-PRIMARY

S/N: E7A1-UP
128.8 BRAKE KW (172.7 BHP) AT 2000-RPM
PART OF 441-0100 ENGINE AR
ALSO AN ATTACHMENT

SMCS-1000 **i06893224**

NOTE	PART NUMBER	QTY	PART NAME 1 2 3 4 5 6 (PRODUCT LEVEL)	SEE PAGE
Y	*377-0721*	1	ALTERNATOR GP-CHARGING	107
Y	*371-2693*	1	BELT TENSIONER GP	8
Y	*425-0196*	1	BREATHER GP (CRANKCASE)	337
Y	*396-2615*	1	CAMSHAFT GP	9
Y	*346-2911*	1	CONNECTION GP-HEATER	49
Y	*373-3606*	1	CONNECTION GP-WATER	50
Y	*445-0071*	1	CONTROL GP-UNPROGRAMMED	124
Y	*346-0097*	1	COOLER GP-ENGINE OIL	53
Y	*378-0629*	1	COVER GP-ACCESSORY DRIVE	10
Y	*389-3346*	1	COVER GP-VALVE MECHANISM	11
Y	*374-6300*	1	CRANKSHAFT GP	13
Y	*390-0854*	1	CYLINDER BLOCK GP	18
Y	*385-2572*	1	CYLINDER HEAD GP	20
Y	*378-8166*	1	DRAIN GP-ENGINE OIL	21
Y	*392-6907*	1	DRIVE GP-FAN	23
Y	*371-2694*	1	EXTENSION GP-FAN	24
Y	*375-0098*	1	FASTENER GP-DAMPER & PULLEY	25
Y	*379-6626*	1	FILLER GP-ENGINE OIL	41
Y	*415-5625*	1	FILM GP (ALTERNATOR)	910
Y	*346-0220*	1	FILTER GP-ENGINE OIL	42
Y	*453-7163*	1	FILTER GP-FUEL	79
Y	*425-0197*	1	FILTER GP-FUMES DISPOSAL	43
Y	*345-8901*	1	FLYWHEEL GP	26
Y	*378-3484*	1	GAUGE GP-OIL LEVEL (DIPSTICK) (ENGINE)	44
Y	*345-8838*	1	HOUSING GP-FLYWHEEL	27
Y	*371-2725*	1	HOUSING GP-FRONT	28
Y	*371-2483*	1	INJECTOR GP-FUEL	82
Y	*371-2478*	1	JET GP-PISTON COOLING	30
Y	*371-2740*	1	LIFTING GP-ENGINE	31
Y	*479-3169*	1	LINES GP-FUEL	88
Y	*393-7694*	1	MANIFOLD GP-EXHAUST	72
Y	*378-8582*	1	MANIFOLD GP-INLET	73
Y	*446-0274*	1	MOUNTING GP-CONTROL	177
Y	*378-0594*	1	PAN GP-OIL	33
Y	*374-6301*	1	PISTON & ROD GP	34
Y	*378-8167*	1	PLATE & FILM GP	918
Y	*346-1478*	1	PLUG GP-FLYWHEEL HOUSING	36
Y	*371-2554*	1	PULLEY GP-CRANKSHAFT	37
Y	*346-0737*	1	PUMP GP-ENGINE OIL	46
			—OR—	
Y	*462-6685*	1	PUMP GP-ENGINE OIL	47
Y	*391-4811*	1	PUMP GP-FUEL INJECTION	96
Y	*372-2297*	1	PUMP GP-WATER	63
Y	*394-9639*	1	RAIL GP-FUEL	101
Y	*371-2480*	1	ROCKER ARM GP	40
Y	*395-0110*	1	SENSOR GP-ENGINE	182

446-6728 **ENGINE AR-PRIMARY (**contd.**)** **i06893224**

NOTE	PART NUMBER	QTY	PART NAME 1 2 3 4 5 6 (PRODUCT LEVEL)	SEE PAGE
Y	*395-0114*	1	STARTING AID GP	184
Y	*380-2039*	1	TURBOCHARGER GP	75
Y	*371-2745*	1	VALVE GP-FLUID SAMPLING	48
Y	*395-0113*	1	WIRING GP-ENGINE	213
	453-9677	1	ELECTRONICS GP-ENGINE	
	376-6464	1	PLATE GP (SERIAL NUMBER)	
	350-8958	1	PLATE-SERIAL NUMBER (ENGINE)	
	332-0905	2	RIVET-DRIVE	

Y - SEPARATE ILLUSTRATION

<END>

371-2693 BELT TENSIONER GP

S/N: E7A1-UP
PART OF 446-6728 ENGINE AR-PRIMARY
ALSO AN ATTACHMENT

SMCS-1357, 1358, 1397 **i05938521**

NOTE	REF NO	GRAPHIC REF	PART NUMBER	QTY	PART NAME 1 2 3 4 5 6 (PRODUCT LEVEL)	SEE PAGE
	1	1	**321-6131**	1	PULLEY (8-GROOVE)	
	2	1	**377-9082**	1	BELT TENSIONER	

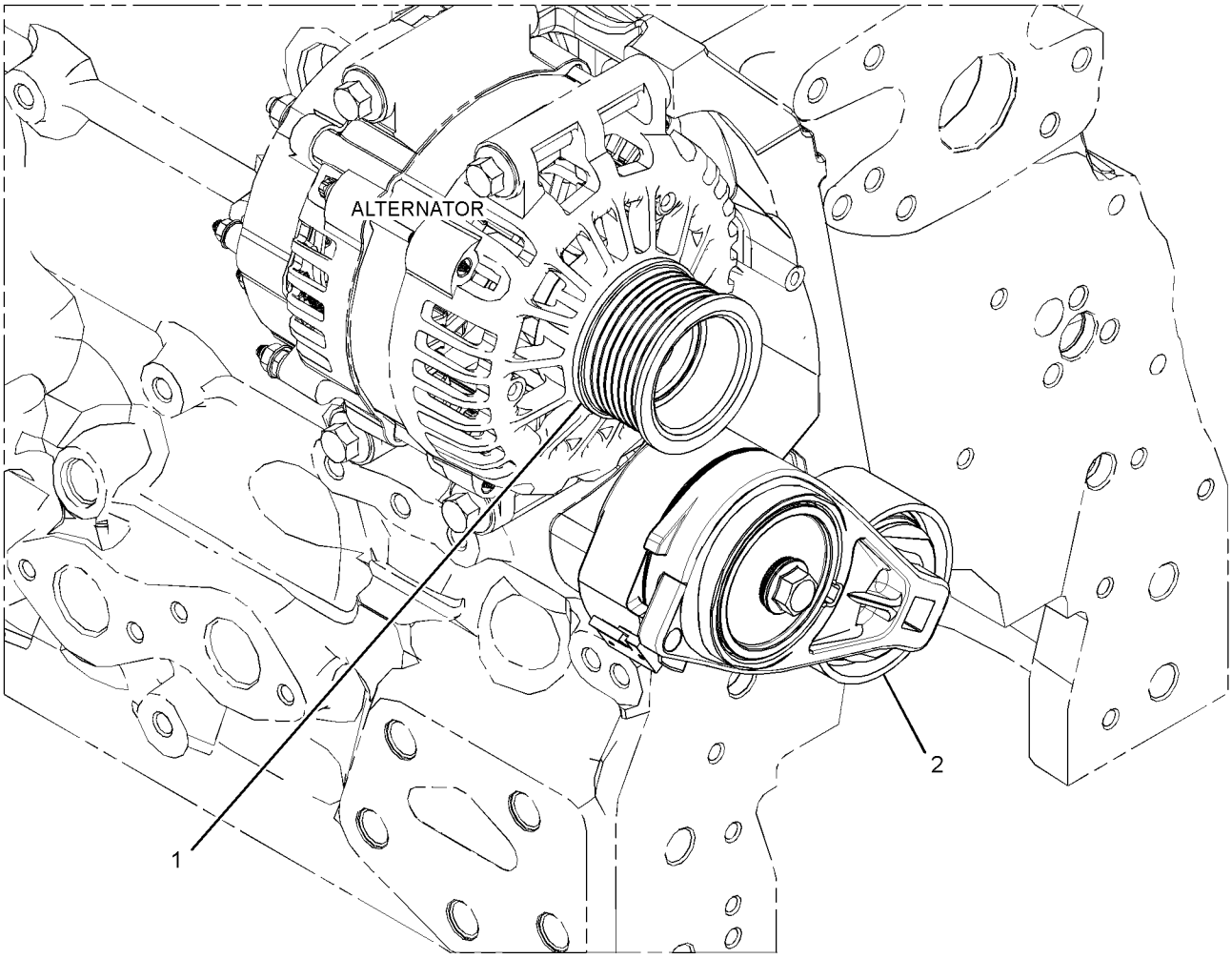

GRAPHIC #1 <END> g02736725

396-2615 CAMSHAFT GP

S/N: E7A1-UP
PART OF 446-6728 ENGINE AR-PRIMARY
ALSO AN ATTACHMENT

SMCS-1210 **i05938523**

NOTE	REF NO	GRAPHIC REF	PART NUMBER	QTY	PART NAME 1 2 3 4 5 6 (PRODUCT LEVEL)	SEE PAGE
	1	1	**278-5125**	12	TAPPET	
	2	1	**396-8795**	1	CAMSHAFT GP	
	2A	1	**067-6135**	1	KEY-WOODRUFF	
	3	1	**319-8426**	12	PUSHROD	

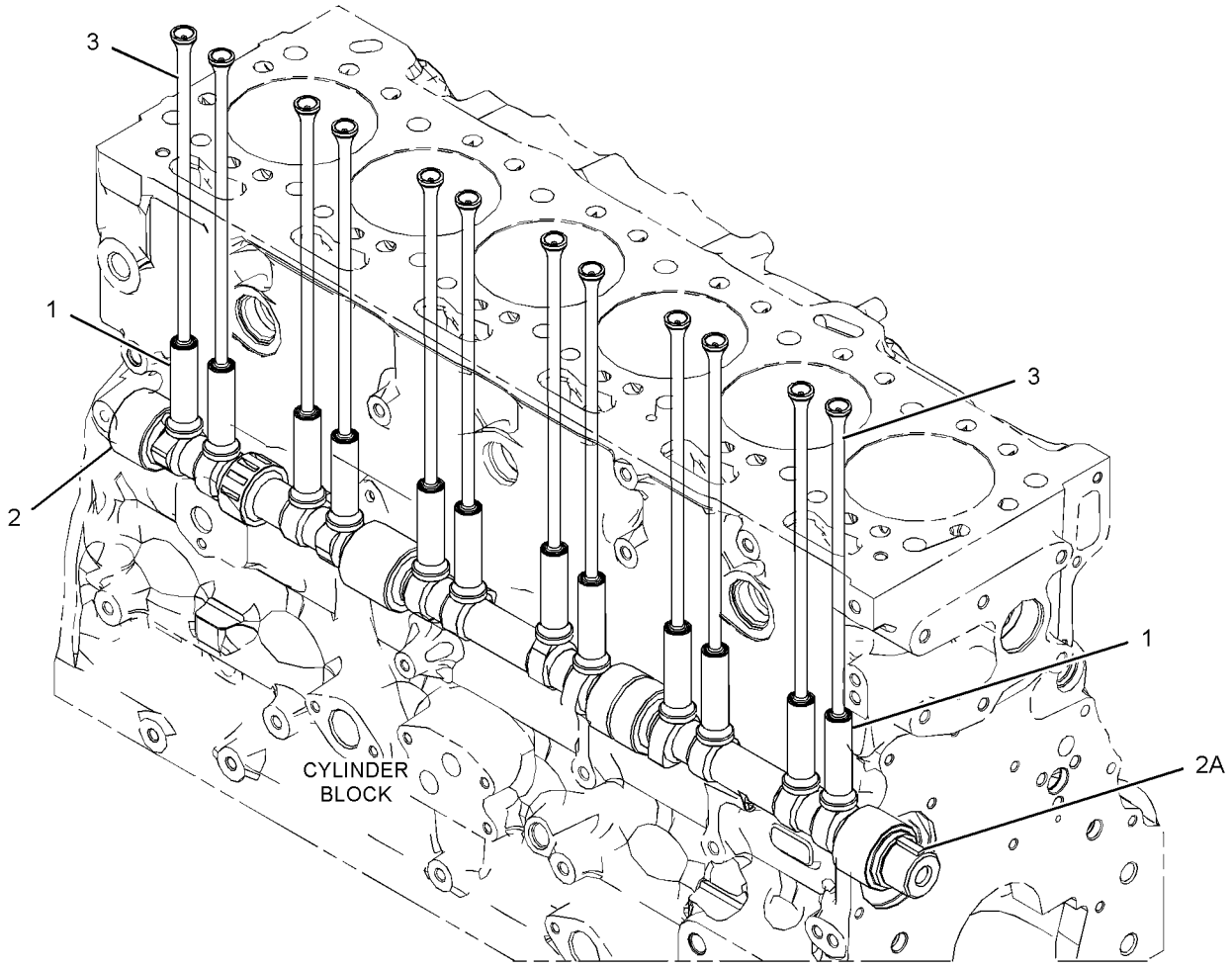

GRAPHIC #1 <END> g03380150

378-0629 COVER GP-ACCESSORY DRIVE

S/N: E7A1-UP
SAEA AAT SPLINE
PART OF 446-6728 ENGINE AR-PRIMARY
ALSO AN ATTACHMENT

SMCS-1150 **i05938615**

NOTE	REF NO	GRAPHIC REF	PART NUMBER	QTY	PART NAME 1 2 3 4 5 6 (PRODUCT LEVEL)	SEE PAGE
M	1	1	**100-4830**	2	BOLT (M10X1.5X20-MM)	
	2	1	**102-2073**	1	SEAL-O-RING	
M	3	1	**102-2078**	1	BOLT (M10X1.5X25-MM)	
M	4	1	**126-3212**	5	BOLT (M8X1.25X25-MM)	
	5	1	**198-8262**	1	COVER AS	
	5A	1	**198-8263**	1	SEAL-O-RING	
	6	1	**222-8625**	1	ADAPTER AS	
	6A	1	**6H-3957**	1	BALL BEARING	
	6B	1	**102-2075**	1	BEARING	
	6C	1	**102-2076**	1	CLIP	
	6D	1	**217-7877**	1	GEAR (33-TEETH)	
	7	1	**277-4223**	1	PLUG	

M - METRIC PART

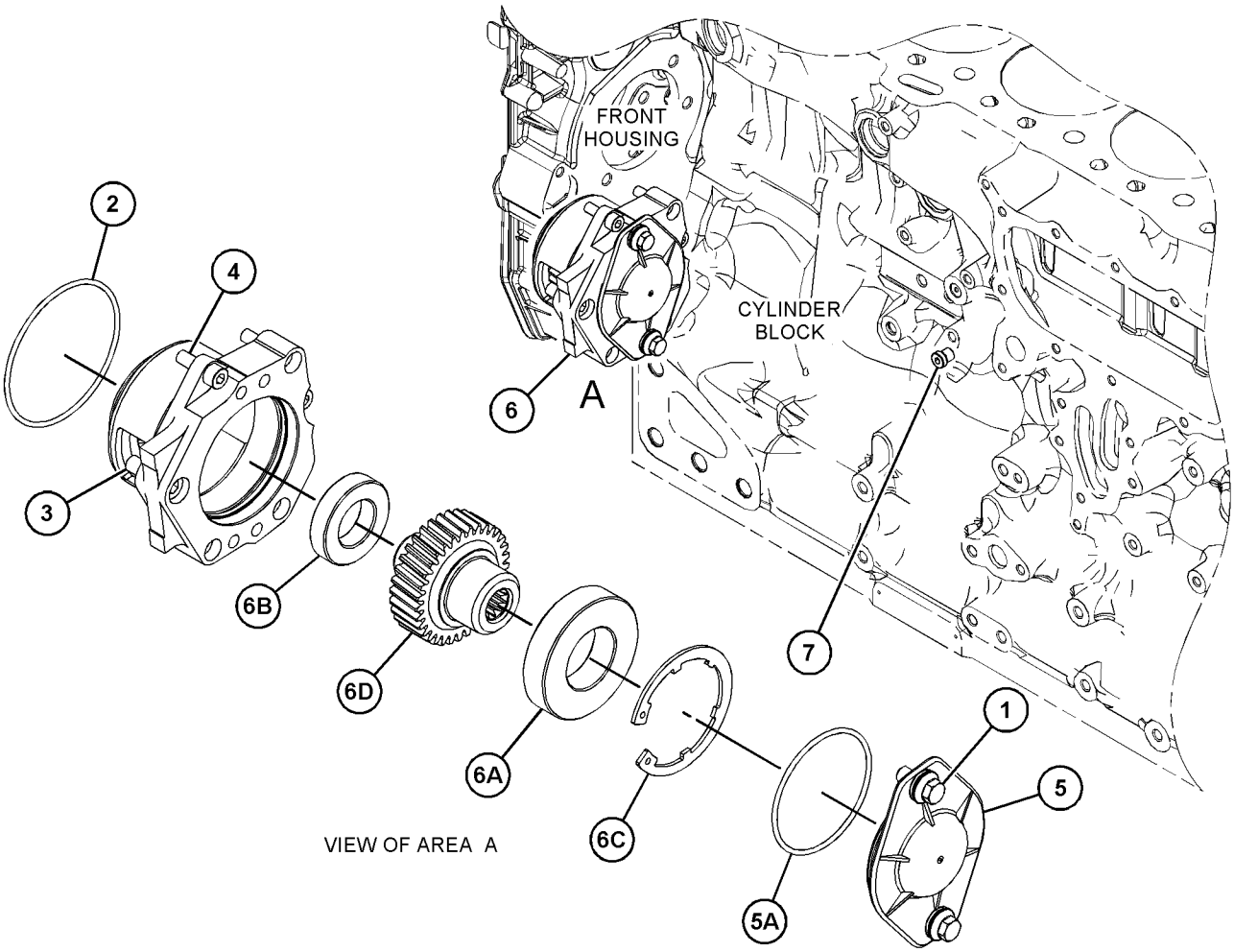

GRAPHIC #1 <END> g03658957

389-3346 COVER GP-VALVE MECHANISM

S/N: E7A1-UP
PART OF 446-6728 ENGINE AR-PRIMARY
ALSO AN ATTACHMENT
TYPE 1

SMCS-1107 **i06871154**

NOTE	REF NO	GRAPHIC REF	PART NUMBER	QTY	PART NAME 1 2 3 4 5 6 (PRODUCT LEVEL)	SEE PAGE
M	1	1	**101-3895**	9	BOLT (M8X1.25X35-MM)	
M	2	1	**103-5705**	6	BOLT (M8X1.25X110-MM)	
	3	1	**383-1382**	1	COVER GP-VALVE MECHANISM	
M	3A	1	**195-9245**	3	SCREW (M4X0.7X10-MM)	
	3B	1	**376-4761**	1	SEAL (VALVE COVER)	
	3C	1	**380-9615**	1	BREATHER	
	4	1	**388-0536**	1	GASKET (VALVE COVER)	
	5	1	**383-1388**	1	COVER-BASE	
M	6	1	**6I-0217**	14	BOLT (M8X1.25X20-MM)	

M - METRIC PART

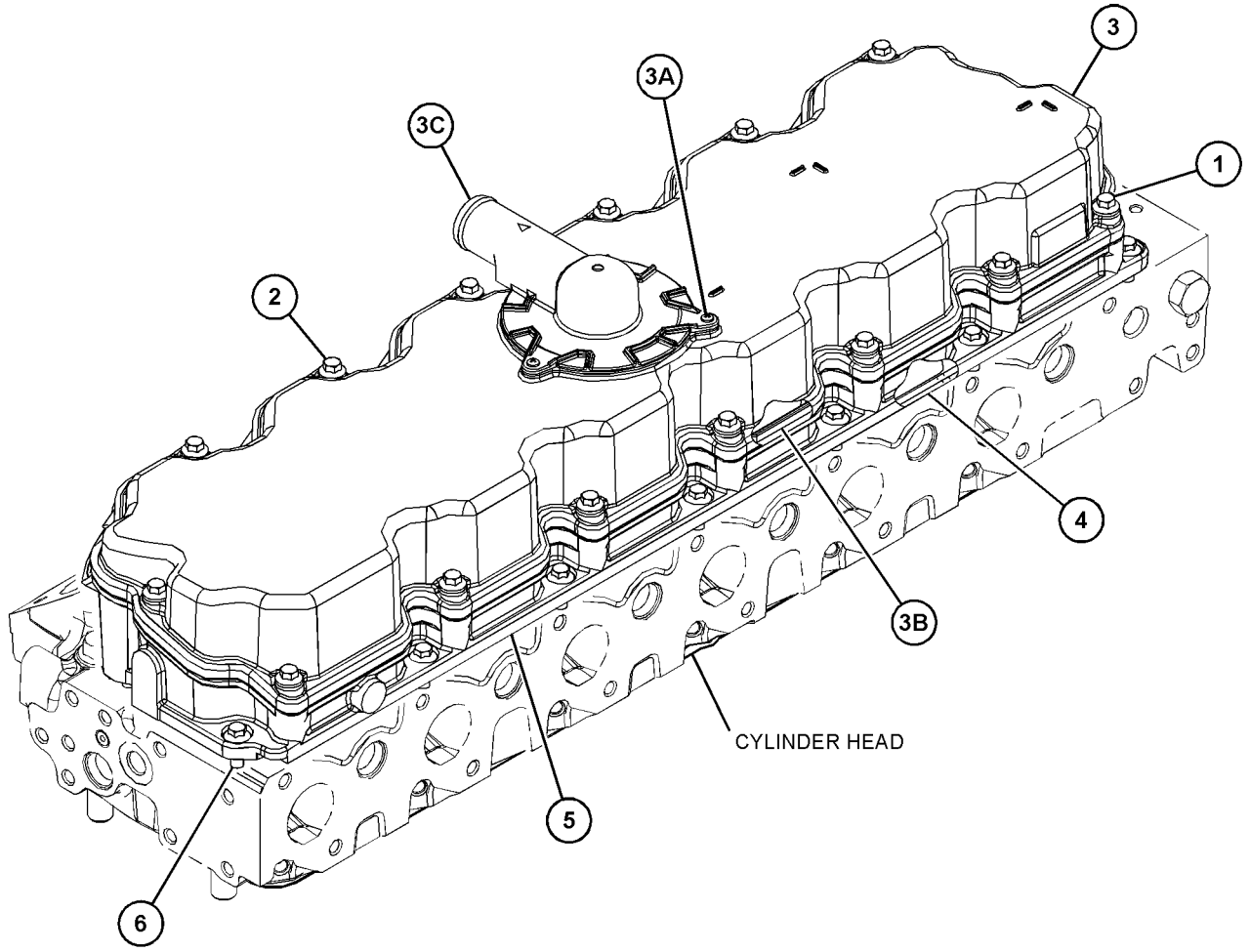

GRAPHIC #1 <END> g06145214

389-3346 COVER GP-VALVE MECHANISM

S/N: E7A1-UP
PART OF 446-6728 ENGINE AR-PRIMARY
ALSO AN ATTACHMENT
TYPE 2

SMCS-1107 **i07638313**

NOTE	REF NO	GRAPHIC REF	PART NUMBER	QTY	PART NAME 1 2 3 4 5 6 (PRODUCT LEVEL)	SEE PAGE
M	1	1	**101-3895**	9	BOLT (M8X1.25X35-MM)	
M	2	1	**103-5705**	6	BOLT (M8X1.25X110-MM)	
C	3	1	**527-1637**	1	COVER GP-VALVE MECHANISM	
M	3A	1	**195-9245**	3	SCREW (M4X0.7X10-MM)	
	3B	1	**527-1641**	1	SEAL	
	3C	1	**380-9615**	1	BREATHER	
		1	**326-7289**	1	SEAL-O-RING	
	4	1	**566-7931**	1	GASKET	
	5	1	**383-1388**	1	COVER-BASE	
M	6	1	**6I-0217**	14	BOLT (M8X1.25X20-MM)	

C - CHANGE FROM PREVIOUS TYPE
M - METRIC PART

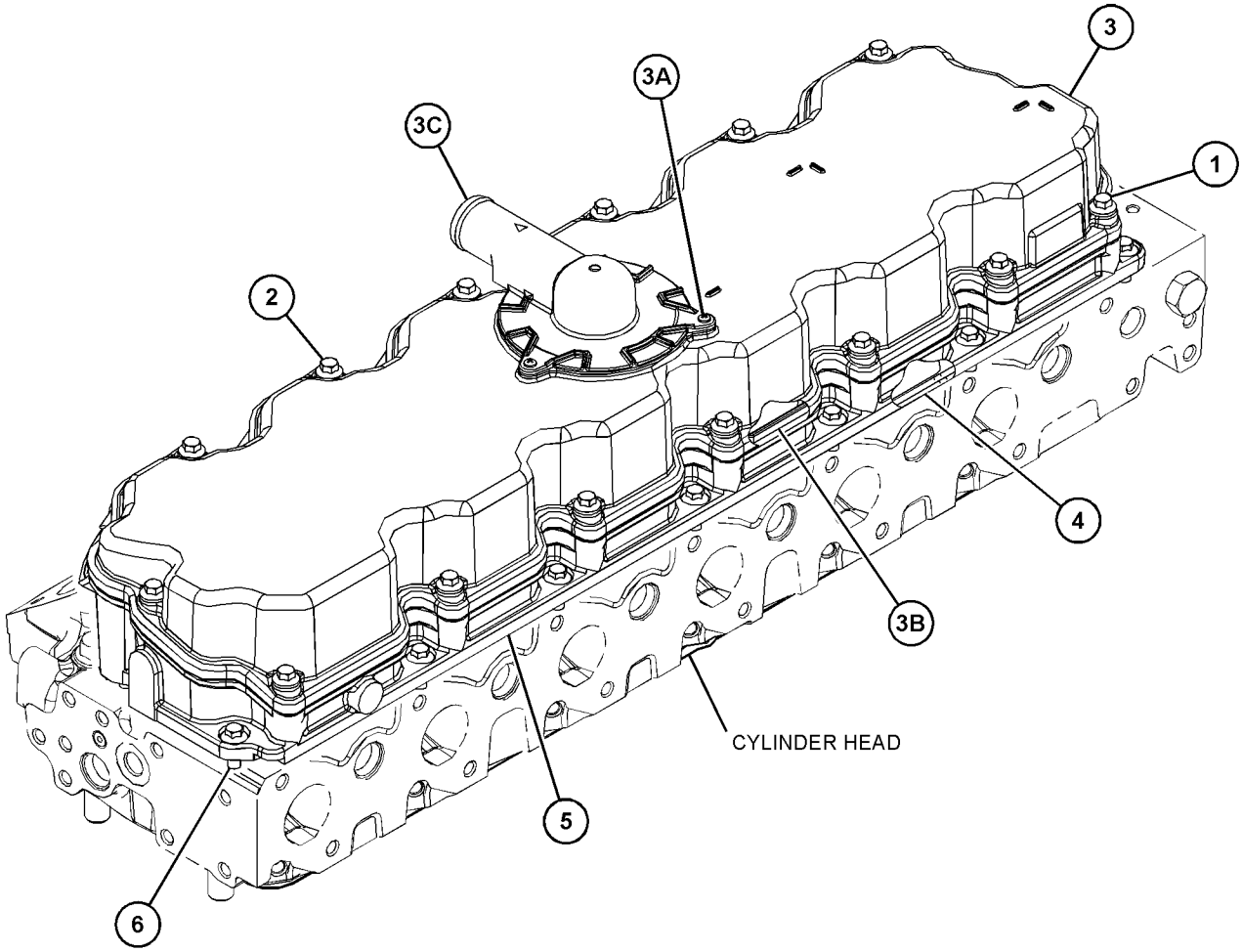

GRAPHIC #1 <END> g06145214

374-6300 CRANKSHAFT GP

S/N: E7A1-UP
PART OF 446-6728 ENGINE AR-PRIMARY
ALSO AN ATTACHMENT
TYPE 1

SMCS-1202 **i05830622**

NOTE	REF NO	GRAPHIC REF	PART NUMBER	QTY	PART NAME 1 2 3 4 5 6 (PRODUCT LEVEL)	SEE PAGE
P	1	1	*317-5485*	7	BEARING	
P	2	1	*317-5486*	7	BEARING	
	3	1	**339-8780**	1	DOWEL	
J	4	1	**363-0559**	2	WASHER-THRUST	
	5	1	**376-4074**	1	CRANKSHAFT	
	6	1	**376-4078**	1	DISC-TIMING	
	7	1	**067-6135**	1	KEY-WOODRUFF	
	8	1	**276-7391**	1	GEAR (34-TEETH)	
M	9	1	**276-7394**	3	SCREW (M6X1XX12-MM)	
					AVAILABLE REPAIR KIT(S):	
P			**360-1978**	1	KIT-BEARING (STANDARD) (CRANKSHAFT)	
					(INCLUDES BEARINGS)	
J			**364-5145**	1	KIT-WASHER (STANDARD)	
					(INCLUDES WASHERS)	

J - KIT MARKED J SERVICES PART(S) MARKED J
M - METRIC PART
P - KIT MARKED P SERVICES PART(S) MARKED P

374-6300 **CRANKSHAFT GP** (contd.) **i05830622**

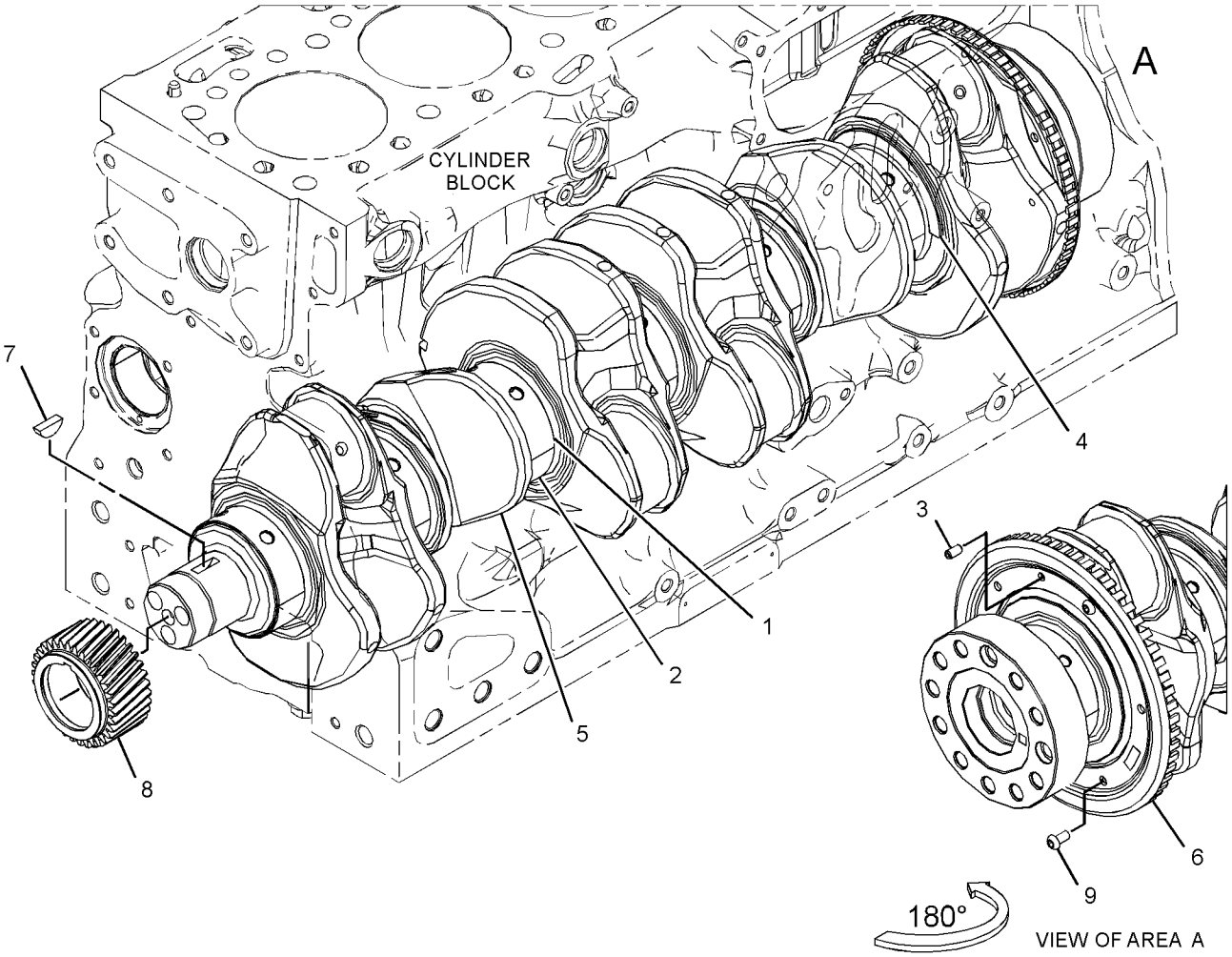

GRAPHIC #1 <END> g03115317

374-6300 CRANKSHAFT GP

S/N: E7A1-UP
PART OF 446-6728 ENGINE AR-PRIMARY
ALSO AN ATTACHMENT
TYPE 2

SMCS-1202 **i06986607**

NOTE	REF NO	GRAPHIC REF	PART NUMBER	QTY	PART NAME 1 2 3 4 5 6 (PRODUCT LEVEL)	SEE PAGE
	1	1	**067-6135**	1	KEY-WOODRUFF	
	2	1	**276-7391**	1	GEAR (34-TEETH)	
M	3	1	**276-7394**	3	SCREW (M6X1XX12-MM)	
	4	1	**339-8780**	1	DOWEL	
J	5	1	*363-0559*	2	WASHER-THRUST	
	6	1	**376-4074**	1	CRANKSHAFT	
	7	1	**376-4078**	1	DISC-TIMING	
CP	8	1	*470-8101*	7	BEARING-CRANKSHAFT (STANDARD-UPPER)	
CP	9	1	*470-8171*	7	BEARING-CRANKSHAFT (STANDARD-LOWER)	
					AVAILABLE REPAIR KIT(S):	
P			**448-4217**	1	KIT-BEARING (STANDARD)	
					(INCLUDES BEARINGS)	
AB			**448-4218**		KIT-BEARING (0.254-MM US)	
					(INCLUDES BEARINGS)	
AB			**448-4220**		KIT-BEARING (0.508-MM US)	
					(INCLUDES BEARINGS)	
AB			**448-4222**		KIT-BEARING (0.762-MM US)	
					(INCLUDES BEARINGS)	
J			**364-5145**	1	KIT-WASHER (STANDARD)	
					(INCLUDES WASHERS)	
AB			**448-4227**		KIT-WASHER (0.20-MM US)	
					(INCLUDES WASHERS)	

A - NOT PART OF THIS GROUP
B - USE AS REQUIRED
C - CHANGE FROM PREVIOUS TYPE
J - KIT MARKED J SERVICES PART(S) MARKED J
M - METRIC PART
P - KIT MARKED P SERVICES PART(S) MARKED P

374-6300 **CRANKSHAFT GP** (contd.) **i06986607**

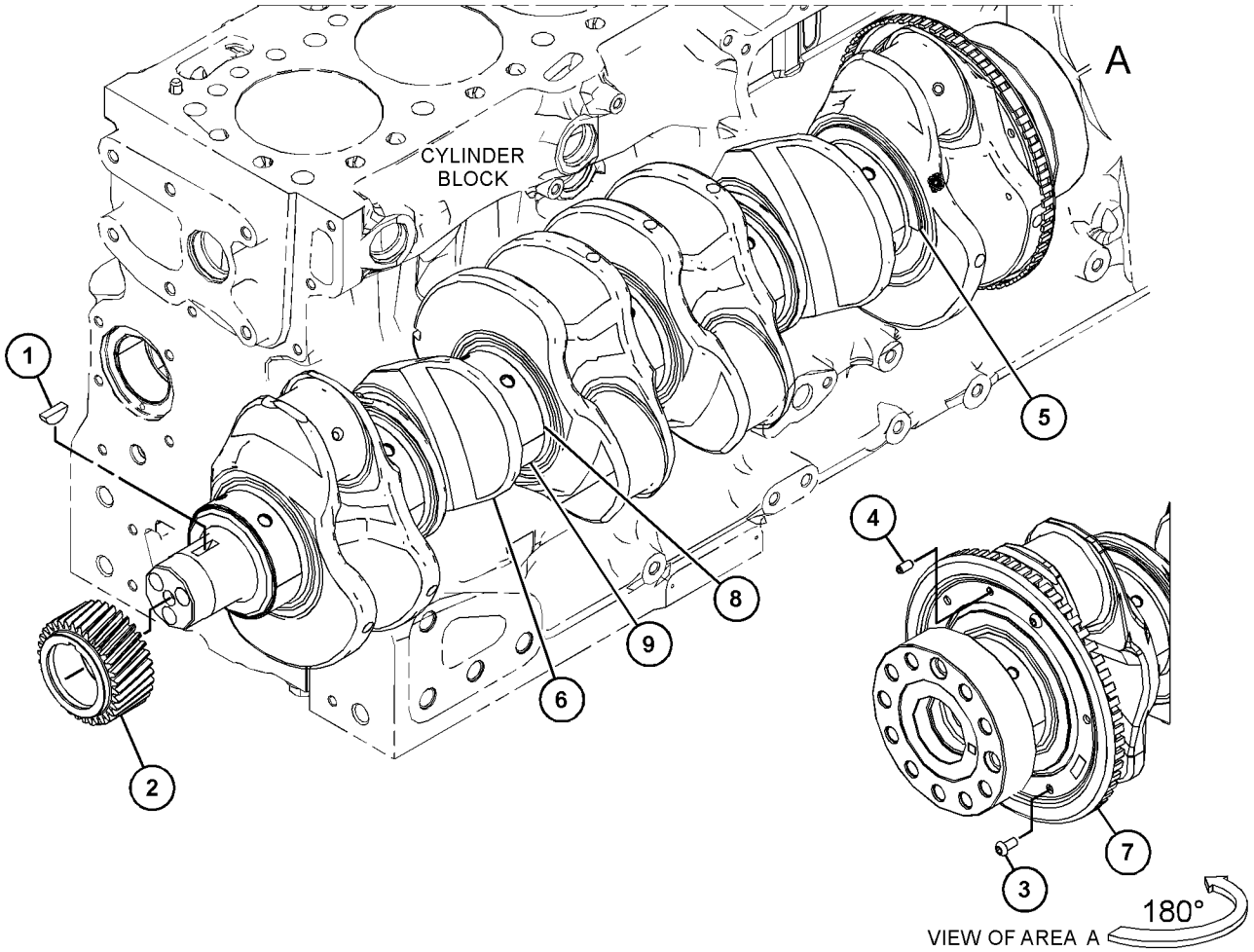

GRAPHIC #1 <END> g06188935

383-3581 CYLINDER BLOCK AS

S/N: E7A1-UP
PART OF 390-0854 CYLINDER BLOCK GP
ALSO AN ATTACHMENT

SMCS-1201 **i07383693**

NOTE	REF NO	GRAPHIC REF	PART NUMBER	QTY	PART NAME 1 2 3 4 5 6 (PRODUCT LEVEL)	SEE PAGE
	1	1	**232-7597**	2	PLUG	
	2	1	**276-5602**	2	PLUG-CORE	
	3	1	**232-7596**	1	PLUG	
	4	1	**067-6043**	7	PLUG-SIDE	
	5	1	**067-6823**	1	PLUG	
	6	1	**185-0884**	2	DOWEL	
	7	1	**225-8858**	2	PLUG	
	8	1	**232-7599**	2	PLUG	
	9	1	**276-5600**	14	BOLT-SPECIAL (BEARING CAP)	
	10	1	**331-6835**	2	PLUG-SEAL	
F			**370-6545**	1	BUSHING-CAMSHAFT	

F - NOT SHOWN

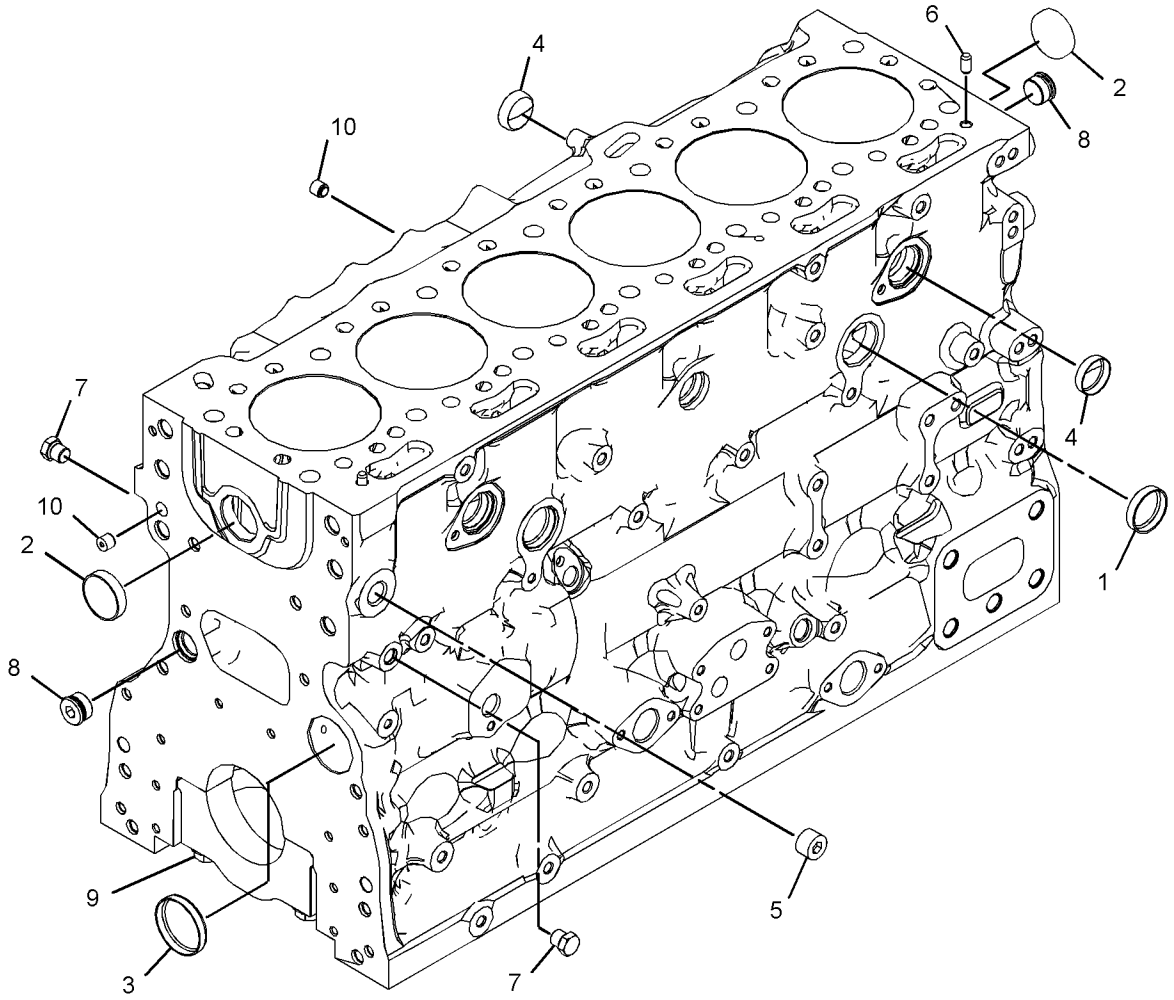

GRAPHIC #1 <END> g03351937

390-0854 CYLINDER BLOCK GP

S/N: E7A1-UP
PART OF 446-6728 ENGINE AR-PRIMARY
ALSO AN ATTACHMENT

SMCS-1201 **i05497530**

NOTE	REF NO	GRAPHIC REF	PART NUMBER	QTY	PART NAME 1 2 3 4 5 6 (PRODUCT LEVEL)	SEE PAGE
	1	1	**276-5603**	1	SEAL-O-RING	
Y	2	1	*383-3581*	1	CYLINDER BLOCK AS	17
M	3	1	**209-9219**	10	BOLT (M8X1.25X16-MM)	
	4	1	**232-7449**	1	HOUSING AS	
	5	1	**232-1322**	1	PLUG	

M - METRIC PART
Y - SEPARATE ILLUSTRATION

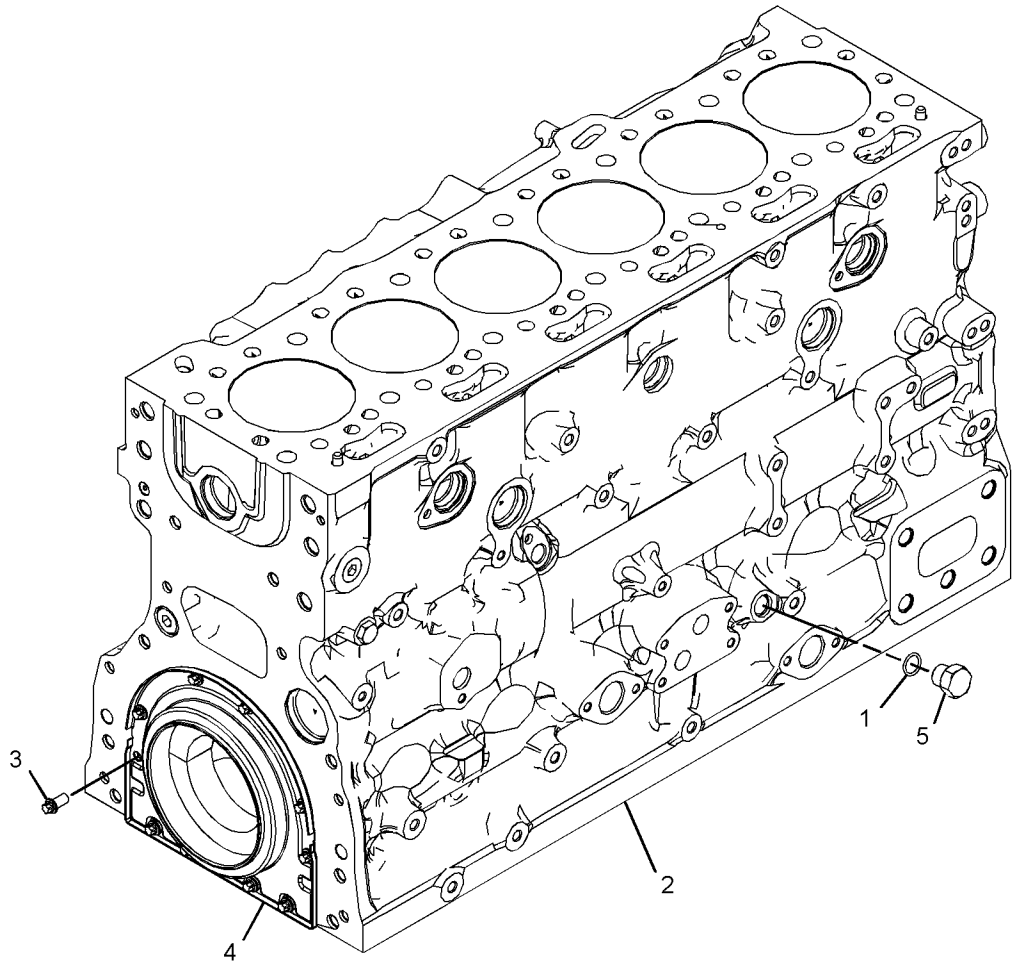

GRAPHIC #1 <END> g03384924

384-5313 CYLINDER HEAD AS

S/N: E7A1-UP
PART OF 385-2572 CYLINDER HEAD GP
ALSO AN ATTACHMENT

SMCS-1100 **i05527212**

NOTE	REF NO	GRAPHIC REF	PART NUMBER	QTY	PART NAME 1 2 3 4 5 6 (PRODUCT LEVEL)	SEE PAGE
	1	1	**276-8116**	6	PLUG-CORE	
	2	1	**377-0400**	12	INSERT-VALVE SEAT (EXHAUST)	
	3	1	**377-0399**	12	INSERT-VALVE SEAT (INTAKE)	
	4	1	**276-8117**	13	PLUG-CORE	

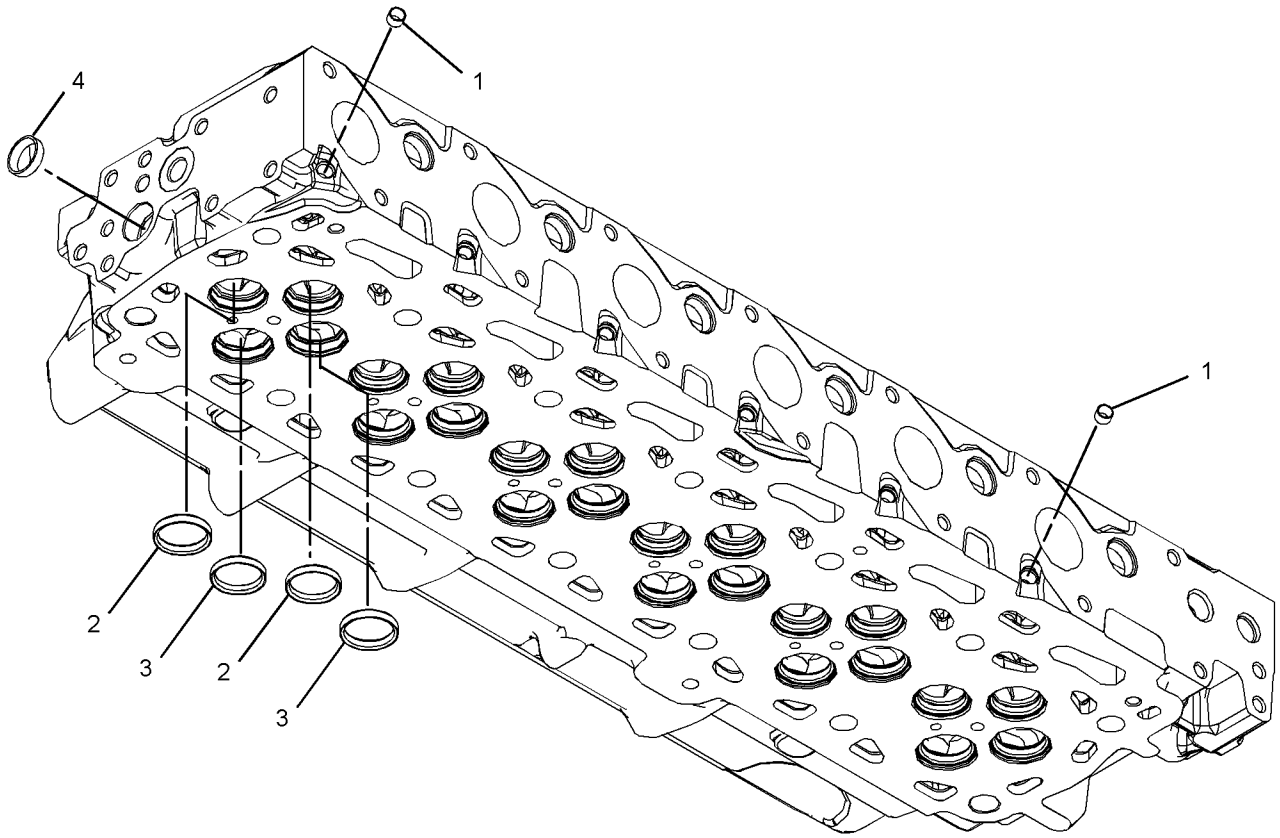

GRAPHIC #1 <END> g03379426

385-2572 CYLINDER HEAD GP

S/N: E7A1-UP
PART OF 446-6728 ENGINE AR-PRIMARY
ALSO AN ATTACHMENT

SMCS-1100 **i05496188**

NOTE	REF NO	GRAPHIC REF	PART NUMBER	QTY	PART NAME 1 2 3 4 5 6 (PRODUCT LEVEL)	SEE PAGE
	1	1	**199-9751**	1	SEAL-O-RING	
Y	2	1	**384-5313**	1	CYLINDER HEAD AS	19
	3	1	**388-4707**	1	GASKET-CYLINDER HEAD	
	4	1	**232-1322**	1	PLUG	
	5	1	**276-8134**	14	BOLT-SPECIAL (CYLINDER HEAD)	
	6	1	**277-4302**	2	DOWEL	
	7	1	**295-6661**	1	PLUG	

Y - SEPARATE ILLUSTRATION

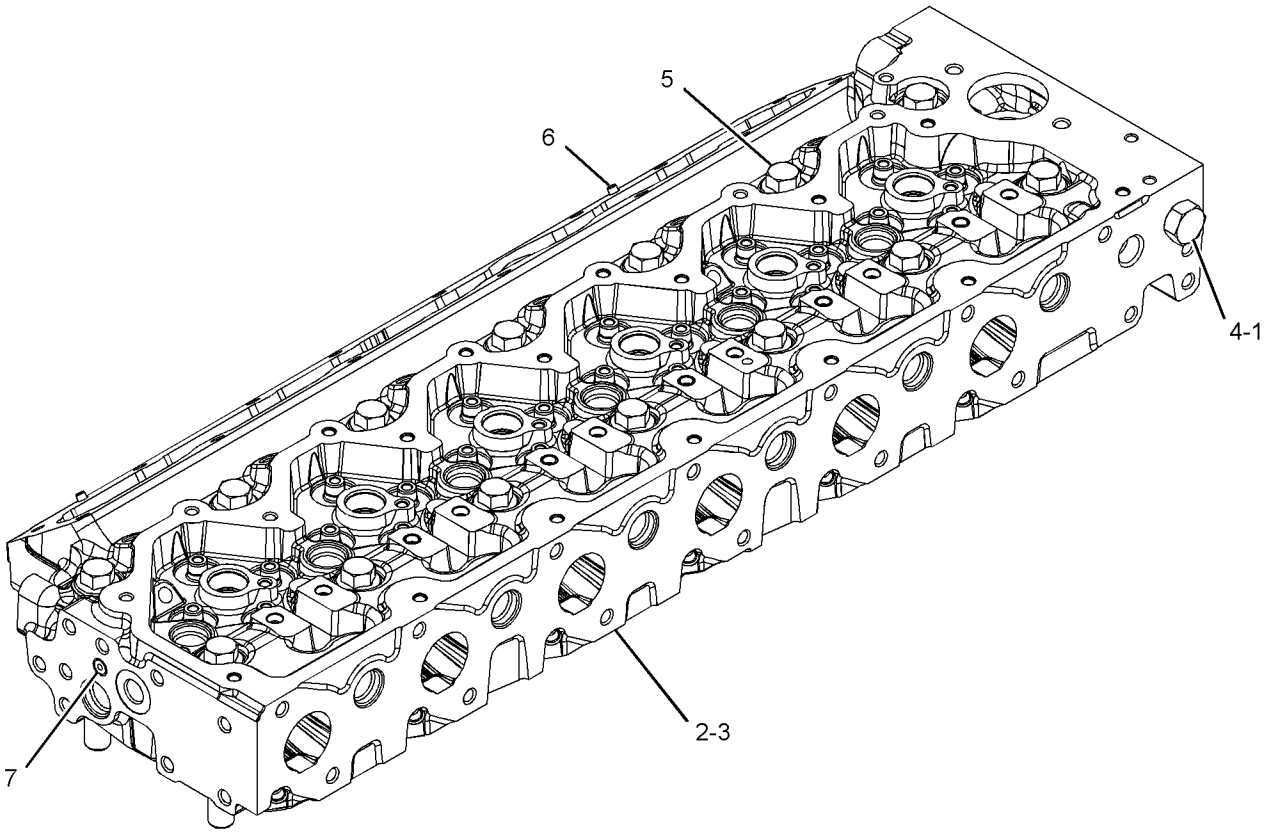

GRAPHIC #1 <END> g03379427

378-8166 DRAIN GP-ENGINE OIL

S/N: E7A1-UP
PART OF 446-6728 ENGINE AR-PRIMARY
ALSO AN ATTACHMENT

SMCS-1302 **i05938534**

NOTE	REF NO	GRAPHIC REF	PART NUMBER	QTY	PART NAME 1 2 3 4 5 6 (PRODUCT LEVEL)	SEE PAGE
	1	1	**6V-7238**	1	VALVE-SHUTOFF	
	2	1	**3K-0360**	1	SEAL-O-RING	

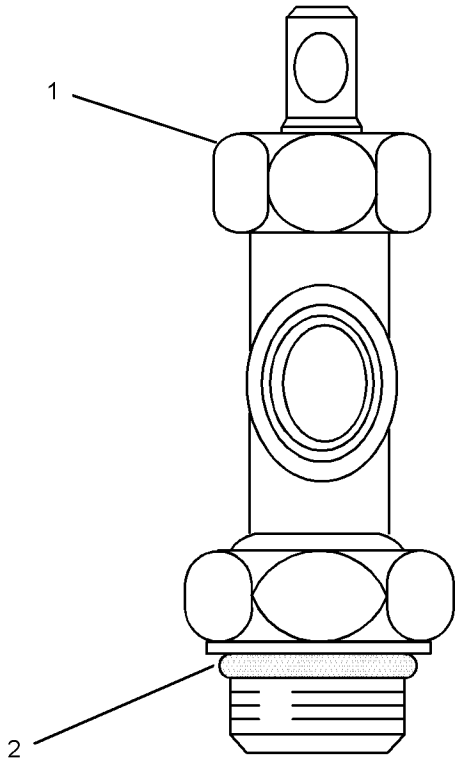

GRAPHIC #1 <END> g03457400

253-9848 DRAIN GP-OIL—ENGINE

S/N: CH91-UP
PART OF 354-7270 INSTALLATION AR
ALSO AN ATTACHMENT

SMCS-1302 **i05970846**

NOTE	REF NO	GRAPHIC REF	PART NUMBER	QTY	PART NAME 1 2 3 4 5 6 (PRODUCT LEVEL)	SEE PAGE
	1	1	*165-2273*	1	VALVE AS-SHUTOFF (ENGINE OIL DRAIN)	
		1	**3K-0360**	1	SEAL-O-RING	
		1	**6V-7238**	1	VALVE-SHUTOFF (ENGINE OIL)	
	2	1	**275-4913**	1	ADAPTER	
	3	1	**159-5255**	1	ADAPTER	
	4	1	**2P-4173**	1	VALVE-DRAIN (ENGINE OIL)	
	5	1	**5P-9186**	1	SEAL-O-RING	

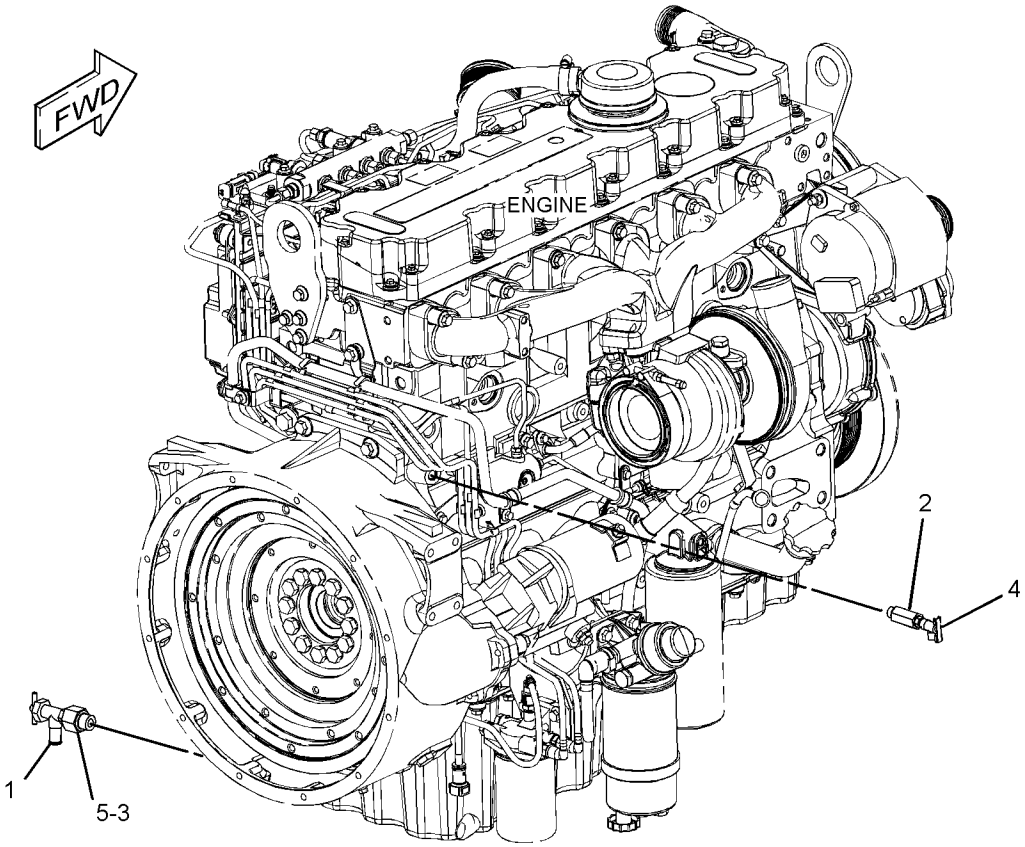

GRAPHIC #1 <END> g01369586

392-6907 DRIVE GP-FAN

S/N: E7A1-UP
PART OF 446-6728 ENGINE AR-PRIMARY
ALSO AN ATTACHMENT

SMCS-1359 **i05938544**

NOTE	REF NO	GRAPHIC REF	PART NUMBER	QTY	PART NAME 1 2 3 4 5 6 (PRODUCT LEVEL)	SEE PAGE
M	1	1	**111-0859**	4	BOLT (M10X1.5X35-MM)	
	2	1	**289-8336**	1	HOUSING AS	
	3	1	**283-4148**	1	PULLEY (8-GROOVE)	
	4	1	**285-2040**	1	BELT-SERPENTINE	

M - METRIC PART

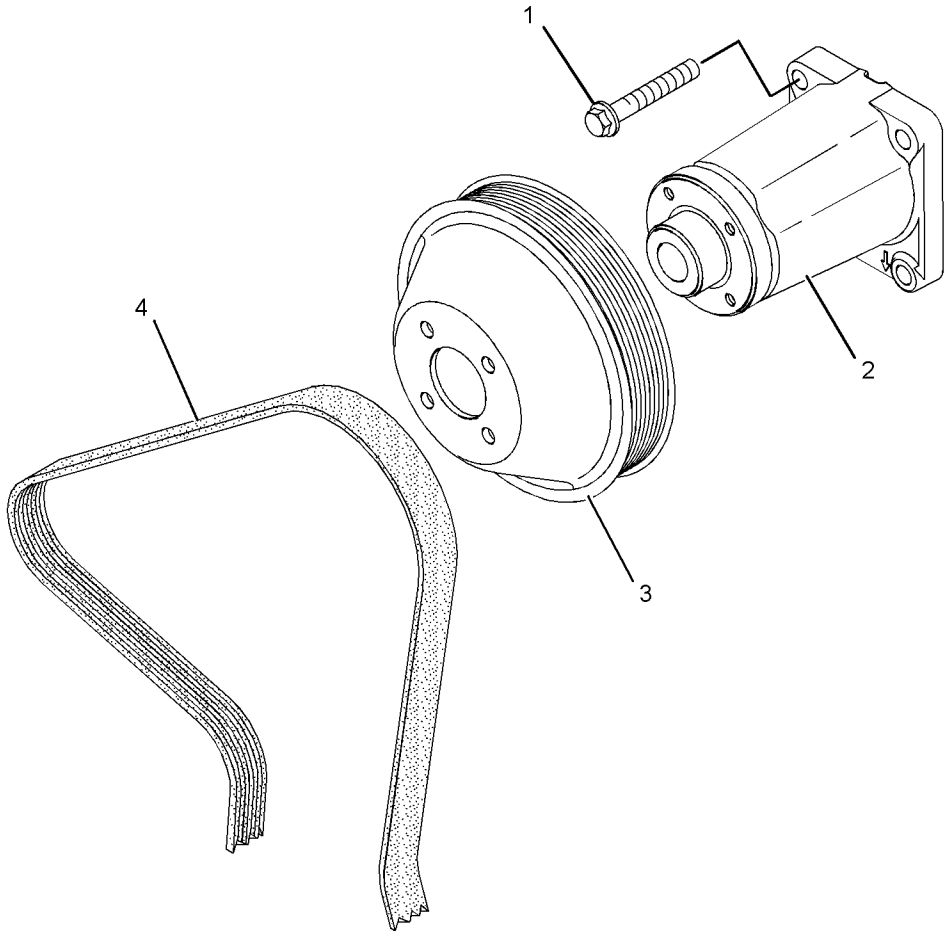

GRAPHIC #1 <END> g01235346

371-2694 EXTENSION GP-FAN

S/N: E7A1-UP
PART OF 446-6728 ENGINE AR-PRIMARY
ALSO AN ATTACHMENT

SMCS-1359 **i05938538**

NOTE	REF NO	GRAPHIC REF	PART NUMBER	QTY	PART NAME 1 2 3 4 5 6 (PRODUCT LEVEL)	SEE PAGE
	1	1	**179-7071**	4	BOLT (M8X1.25X20-MM)	

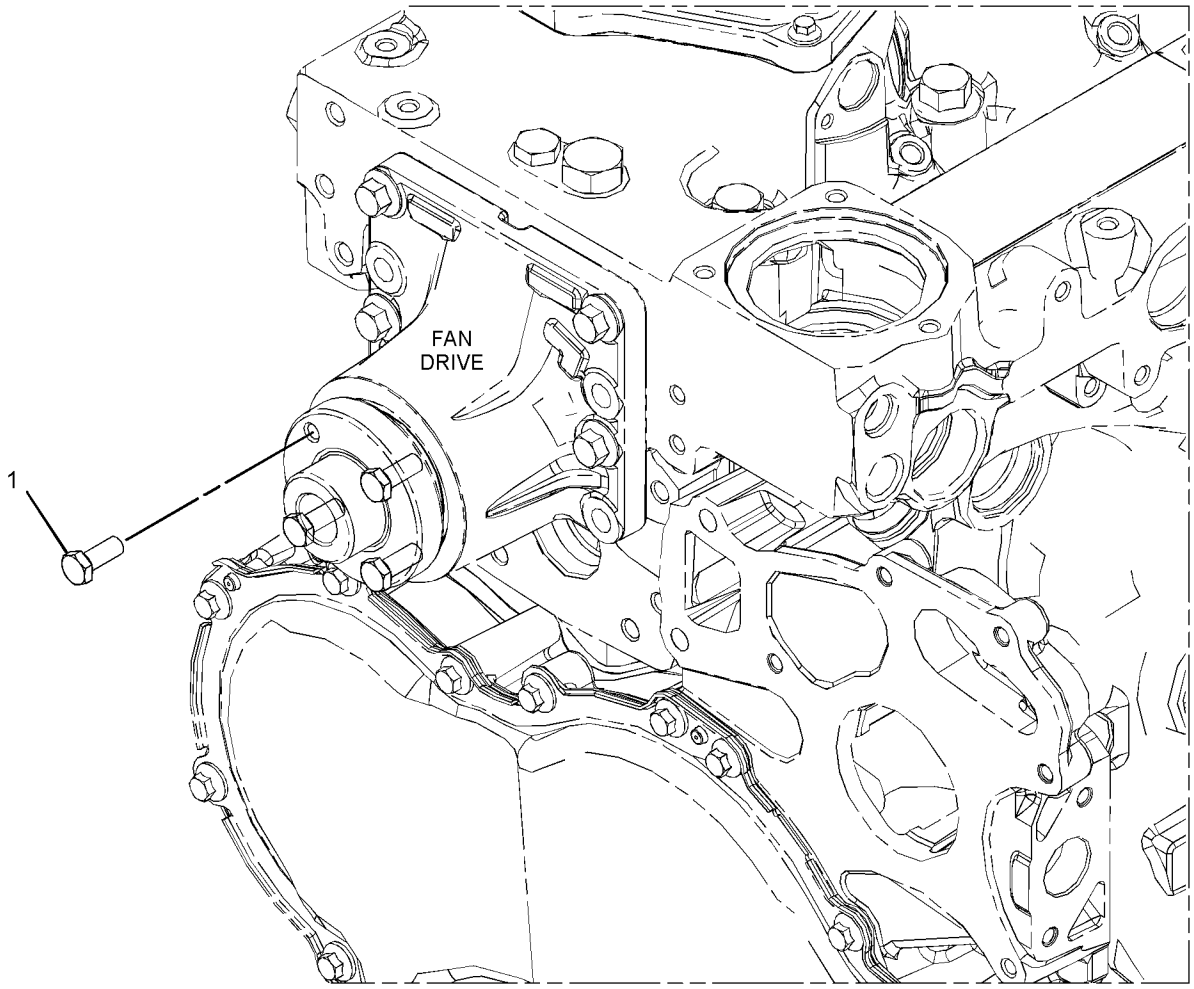

GRAPHIC #1 <END> g02564805

375-0098 FASTENER GP-DAMPER & PULLEY

S/N: E7A1-UP
PART OF 446-6728 ENGINE AR-PRIMARY
ALSO AN ATTACHMENT

SMCS-1205, 7553 **i06299767**

NOTE	REF NO	GRAPHIC REF	PART NUMBER	QTY	PART NAME 1 2 3 4 5 6 (PRODUCT LEVEL)	SEE PAGE
M	1	1	**274-1935**	6	BOLT (M12X1.75X30-MM)	

M - METRIC PART

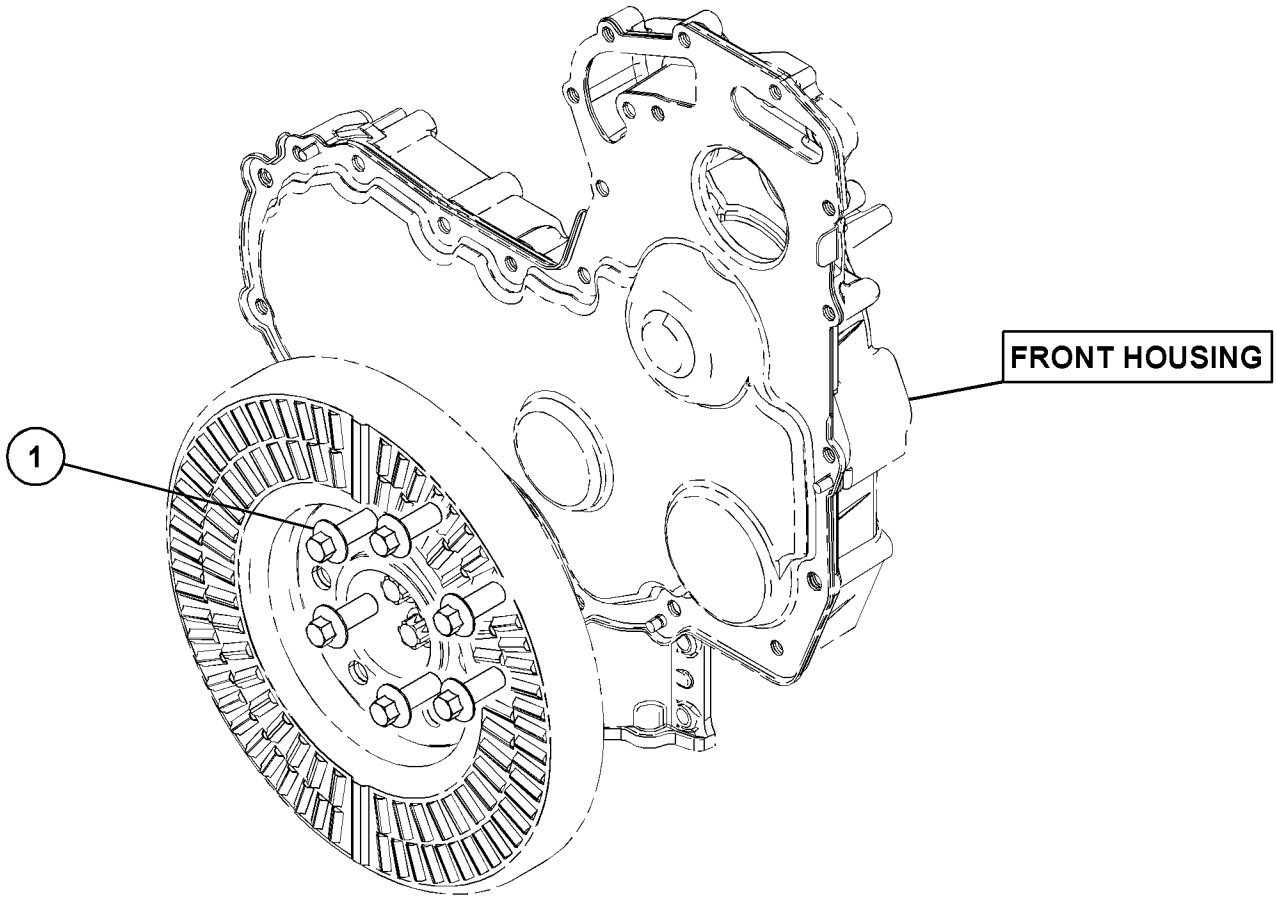

GRAPHIC #1 <END> g03172177

345-8901 FLYWHEEL GP

S/N: E7A1-UP
PART OF 446-6728 ENGINE AR-PRIMARY
ALSO AN ATTACHMENT

SMCS-1156 **i06240176**

NOTE	REF NO	GRAPHIC REF	PART NUMBER	QTY	PART NAME 1 2 3 4 5 6 (PRODUCT LEVEL)	SEE PAGE
	1	1	**458-3400**	1	FLYWHEEL AS	
	1A	1	**033-7687**	1	RING-STARTING MOTOR (126-TEETH)	
	2	1	**0S-1603**	12	BOLT (1/2-20X1.5-IN)	
	3	1	**145-4911**	12	WASHER	

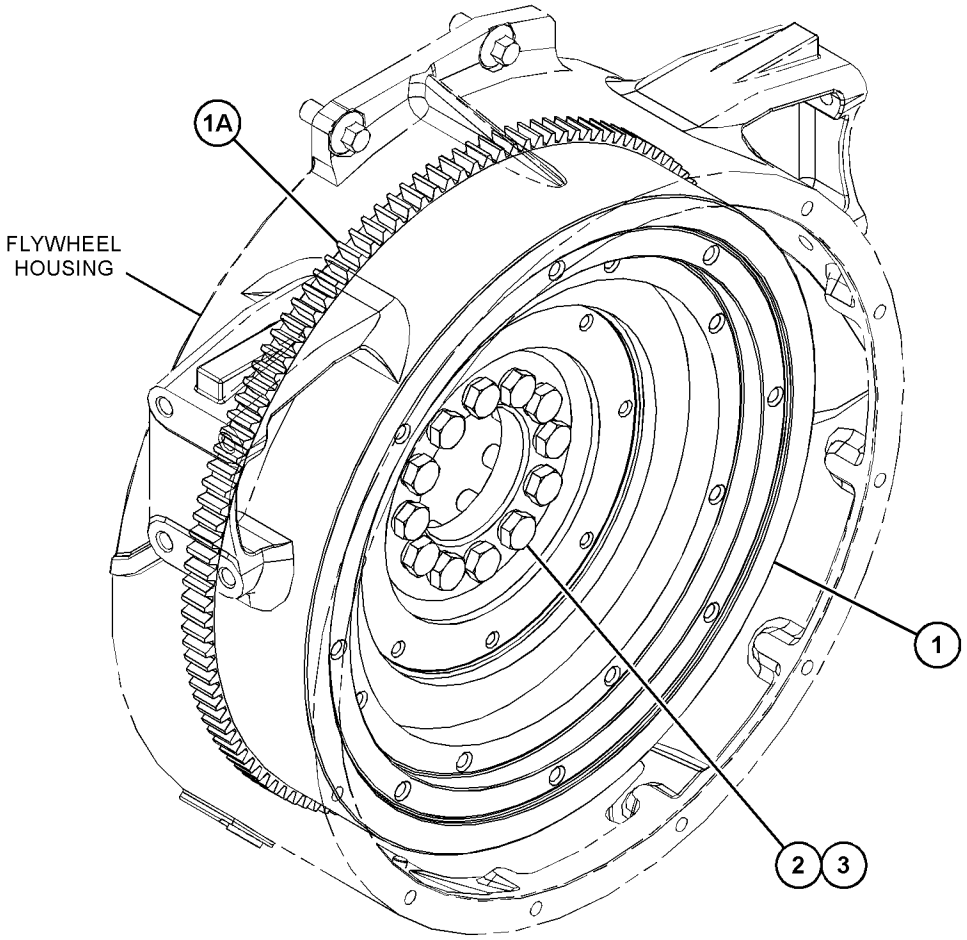

GRAPHIC #1 <END> g03647217

345-8838 HOUSING GP-FLYWHEEL

S/N: E7A1-UP
PART OF 446-6728 ENGINE AR-PRIMARY
ALSO AN ATTACHMENT

SMCS-1157 **i05938579**

NOTE	REF NO	GRAPHIC REF	PART NUMBER	QTY	PART NAME 1 2 3 4 5 6 (PRODUCT LEVEL)	SEE PAGE
M	1	1	**6I-0423**	2	BOLT (M12X1.75X30-MM)	
	2	1	**7W-1176**	1	PLATE-COVER	
M	3	1	**114-4363**	2	BOLT (M8X1.25X12-MM)	
M	4	1	**121-0883**	6	BOLT (M10X1.5X30-MM)	
	5	1	**199-3109**	1	PLUG	
	6	1	**287-8597**	2	DOWEL	
	7	1	**306-2332**	1	HOUSING-FLYWHEEL	
	8	1	**375-9272**	2	PLUG	
	9	1	**393-4006**	1	GASKET	

M - METRIC PART

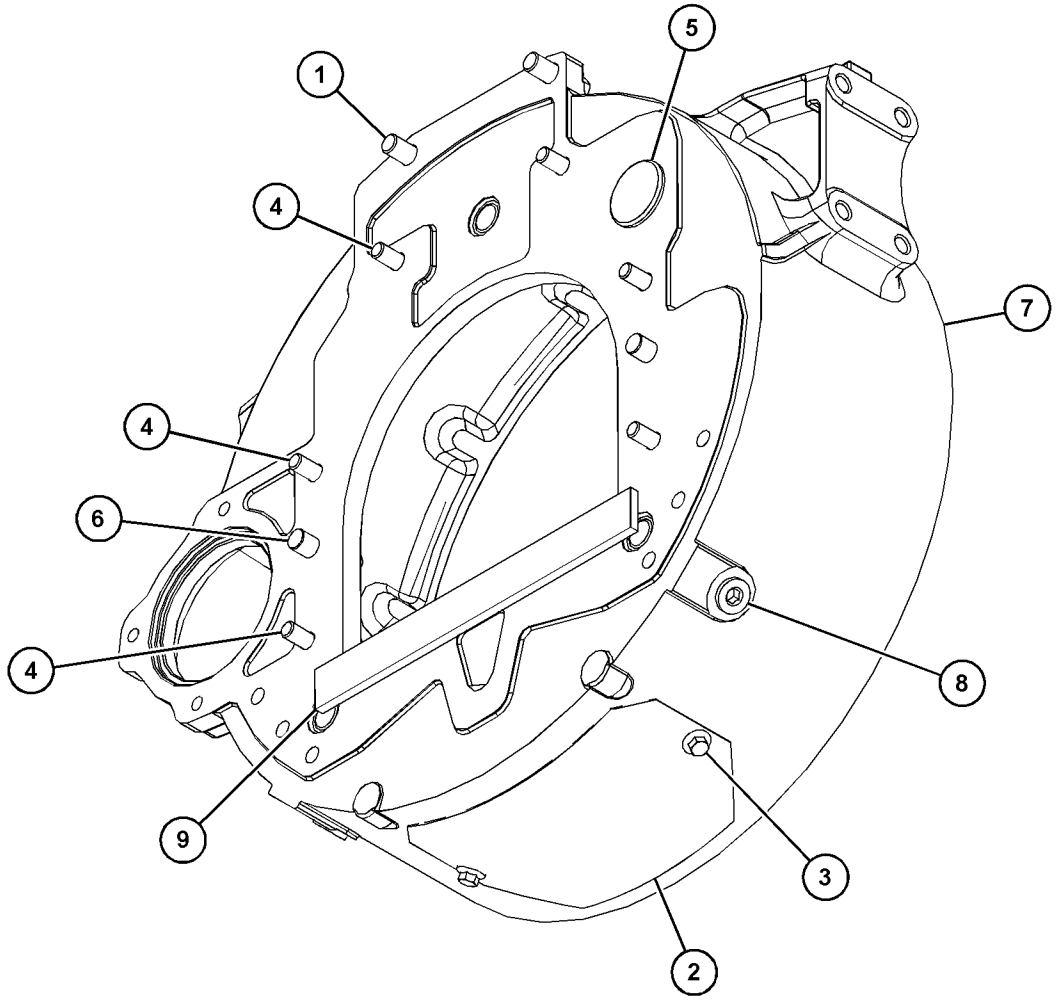

GRAPHIC #1 <END> g03647626

371-2725 HOUSING GP-FRONT

S/N: E7A1-UP
PART OF 446-6728 ENGINE AR-PRIMARY
ALSO AN ATTACHMENT

SMCS-1151, 1162, 1206 **i06858972**

NOTE	REF NO	GRAPHIC REF	PART NUMBER	QTY	PART NAME 1 2 3 4 5 6 (PRODUCT LEVEL)	SEE PAGE
M	1	1	**6I-0650**	3	BOLT (M10X1.5X65-MM)	
M	2	1	**7C-4616**	1	BOLT (M12X1.75X45-MM)	
	3	1	**067-6179**	1	DOWEL	
M	4	1	**100-3751**	5	BOLT (M8X1.25X65-MM)	
M	5	1	**100-4830**	1	BOLT (M10X1.5X20-MM)	
M	6	1	**101-3895**	2	BOLT (M8X1.25X35-MM)	
M	7	1	**124-3815**	9	BOLT (M8X1.25X16-MM)	
	8	1	**133-1011**	1	WASHER	
	9	1	**232-3666**	1	WASHER-THRUST	
	10	1	**277-3013**	1	SEAL	
	11	1	**346-0408**	1	PLATE	
	12	1	**443-9076**	1	CASE-GEAR	
M	13	1	**6I-0217**	6	BOLT (M8X1.25X20-MM)	
M	14	1	**6I-0645**	4	BOLT (M8X1.25X25-MM)	
	15	1	**324-0444**	1	HUB-IDLER GEAR	
	16	1	**425-7103**	1	GEAR (68-TEETH)	
	17	1	**226-8767**	1	COVER AS-FRONT	
		1	**226-8766**	1	GASKET-COVER	
	18	1	**251-4336**	1	GEAR AS-IDLER (73-TEETH)	
	19	1	**277-3012**	1	GASKET-COVER	

M - METRIC PART

371-2725 **HOUSING GP-FRONT (**contd.**)** **i06858972**

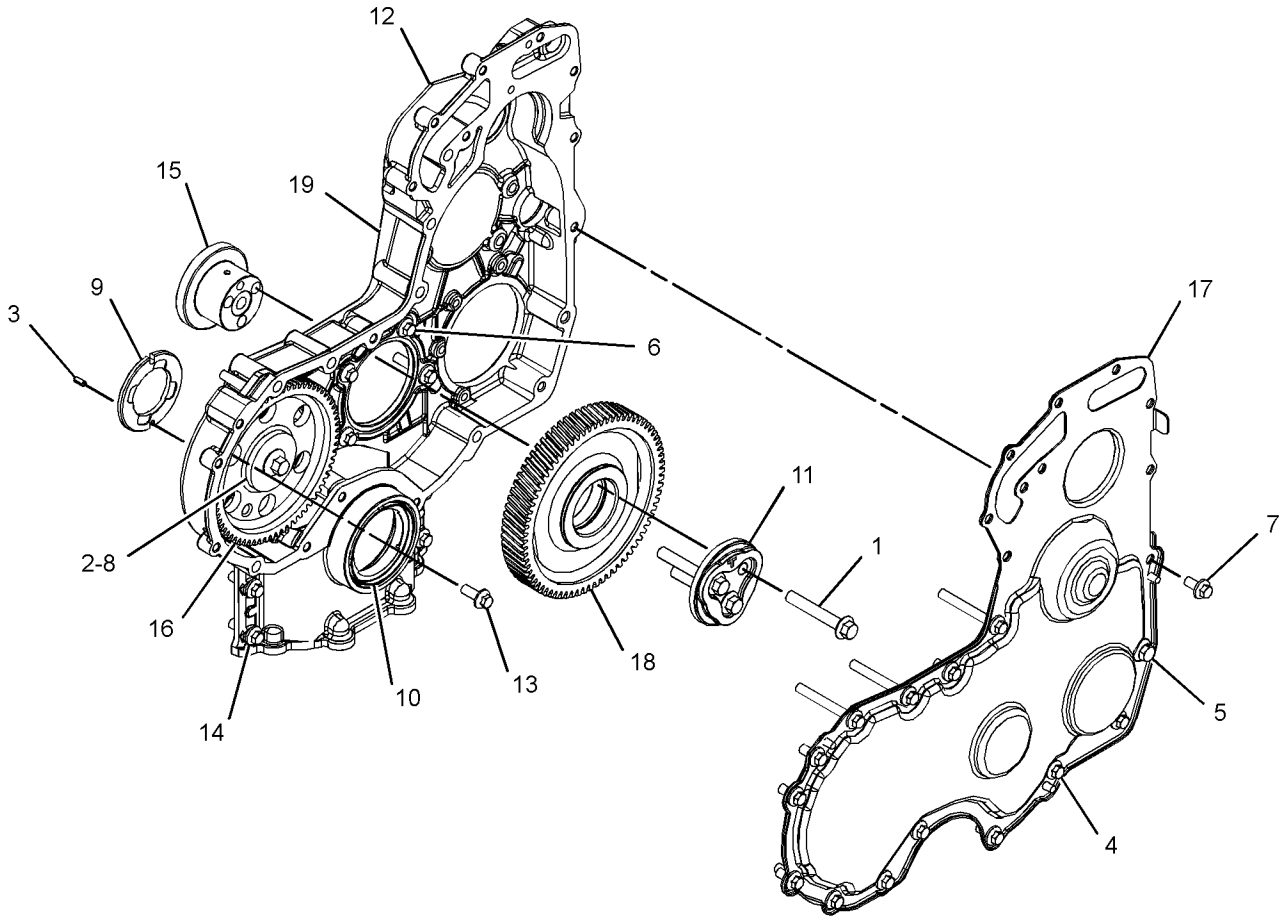

GRAPHIC #1 <END> g03378599

371-2478 JET GP-PISTON COOLING

S/N: E7A1-UP
PART OF 446-6728 ENGINE AR-PRIMARY
ALSO AN ATTACHMENT

SMCS-1331 **i05494318**

NOTE	REF NO	GRAPHIC REF	PART NUMBER	QTY	PART NAME 1 2 3 4 5 6 (PRODUCT LEVEL)	SEE PAGE
M	1	1	**100-4841**	6	BOLT (M6X1X10-MM)	
	2	1	**329-3796**	6	TUBE AS-OIL JET	

M - METRIC PART

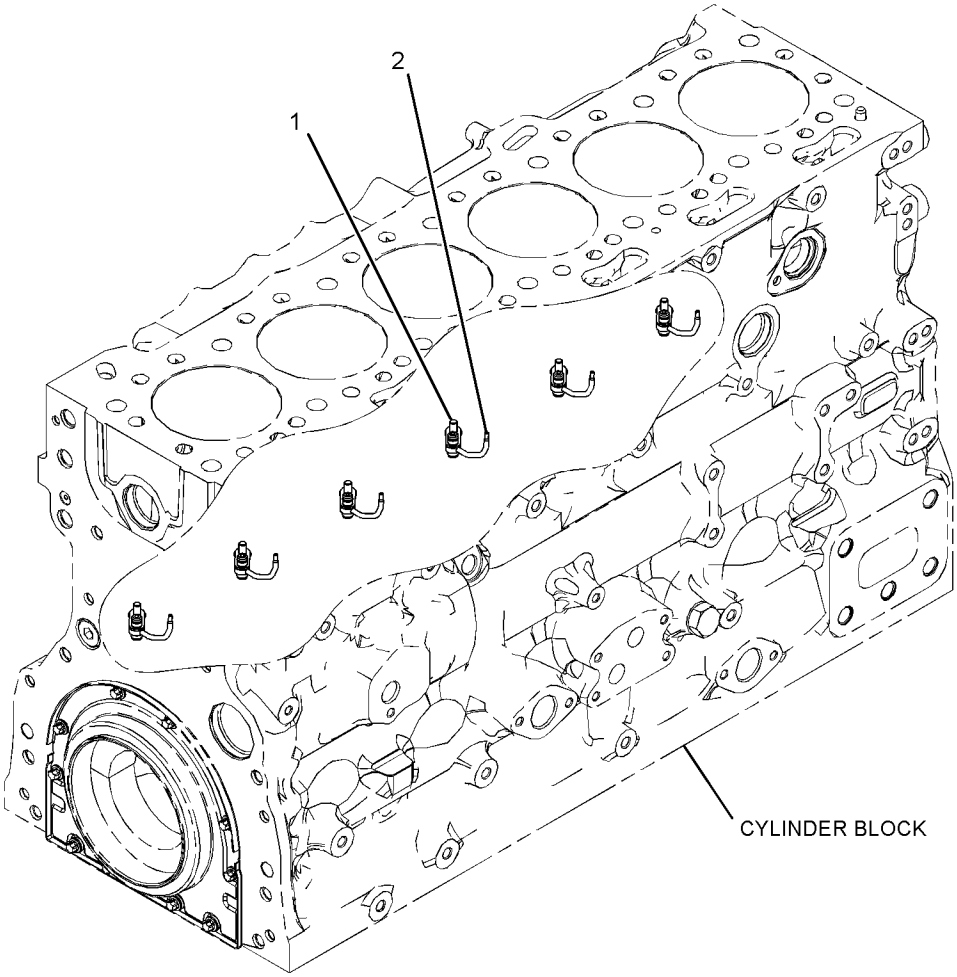

GRAPHIC #1 <END> g03378569

371-2740 LIFTING GP-ENGINE

S/N: E7A1-UP
PART OF 446-6728 ENGINE AR-PRIMARY
ALSO AN ATTACHMENT

SMCS-1122 **i05496036**

NOTE	REF NO	GRAPHIC REF	PART NUMBER	QTY	PART NAME 1 2 3 4 5 6 (PRODUCT LEVEL)	SEE PAGE
	1	1	**279-9651**	1	PLATE-LIFTING	
	2	1	**304-5062**	1	BRACKET	
M	3	1	**6I-0654**	2	BOLT (M10X1.5X25-MM)	
M	4	1	**123-2899**	4	BOLT (M10X1.5X40-MM)	
	5	1	**415-1604**	1	BRACKET-LIFTING	

M - METRIC PART

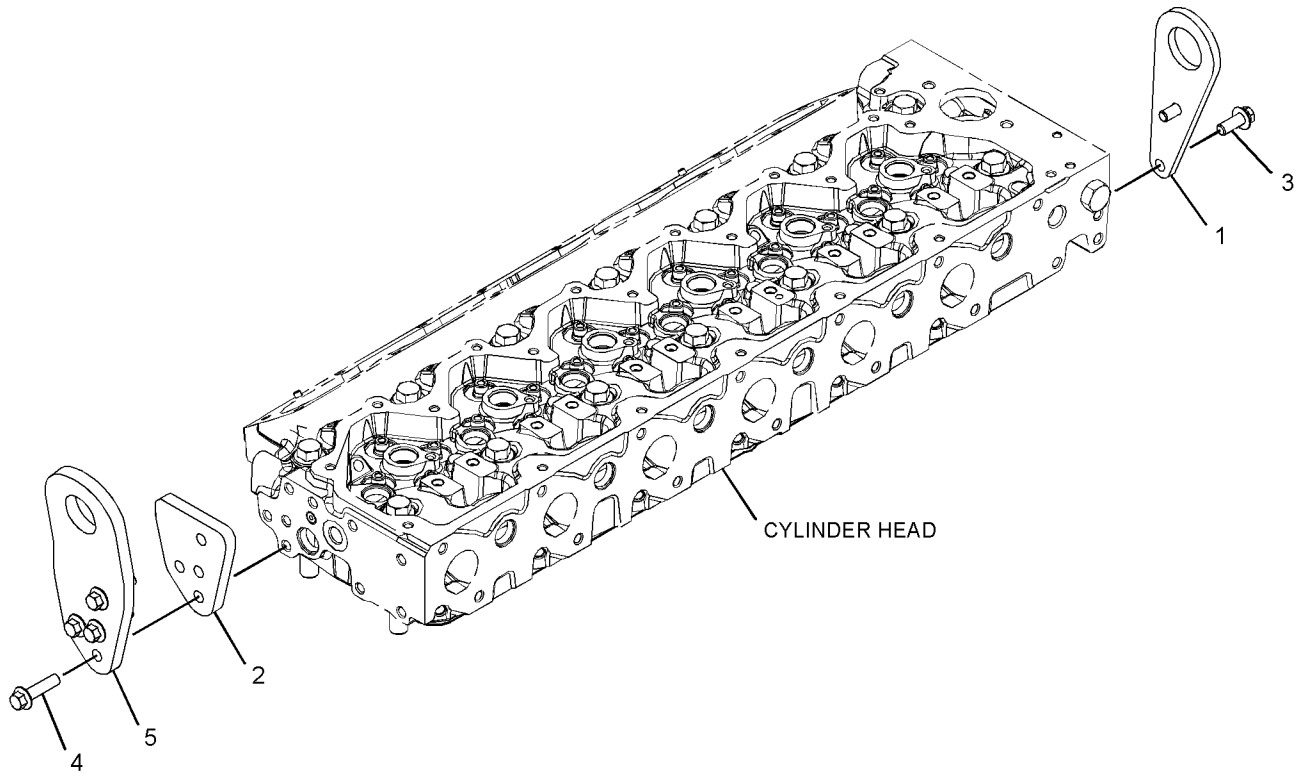

GRAPHIC #1 <END> g03456846

253-9834 MOUNTING GP-ENGINE FLEXIBLE

S/N: CH91-UP
PART OF 354-7270 INSTALLATION AR
ALSO AN ATTACHMENT

SMCS-1152 **i05970844**

NOTE	REF NO	GRAPHIC REF	PART NUMBER	QTY	PART NAME 1 2 3 4 5 6 (PRODUCT LEVEL)	SEE PAGE
	1	1	**187-3764**	2	MOUNT AS	
	2	1	**207-1706**	1	MOUNT AS	
	3	1	**207-1707**	1	MOUNT AS	
	4	1	**214-9350**	2	BRACKET AS-ENGINE (REAR)	
	5	1	**214-9376**	4	PLATE	
	6	1	**216-4197**	1	BRACKET AS-ENGINE (FRONT, LH)	
	7	1	**216-4199**	2	SPACER (17.5X85X10-MM THK)	
	8	1	**260-8394**	1	BRACKET AS-ENGINE (FRONT, RH)	
	9	1	**123-8642**	4	WASHER (17X75X6-MM THK)	
M	10	1	**7X-2556**	2	BOLT (M16X2X100-MM)	
M	11	1	**8T-4136**	16	BOLT (M10X1.5X25-MM)	
M	12	1	**8T-4139**	8	BOLT (M12X1.75X30-MM)	
M	13	1	**8T-4140**	4	BOLT (M16X2X60-MM)	
M	14	1	**8T-4173**	2	BOLT (M16X2X110-MM)	

M - METRIC PART

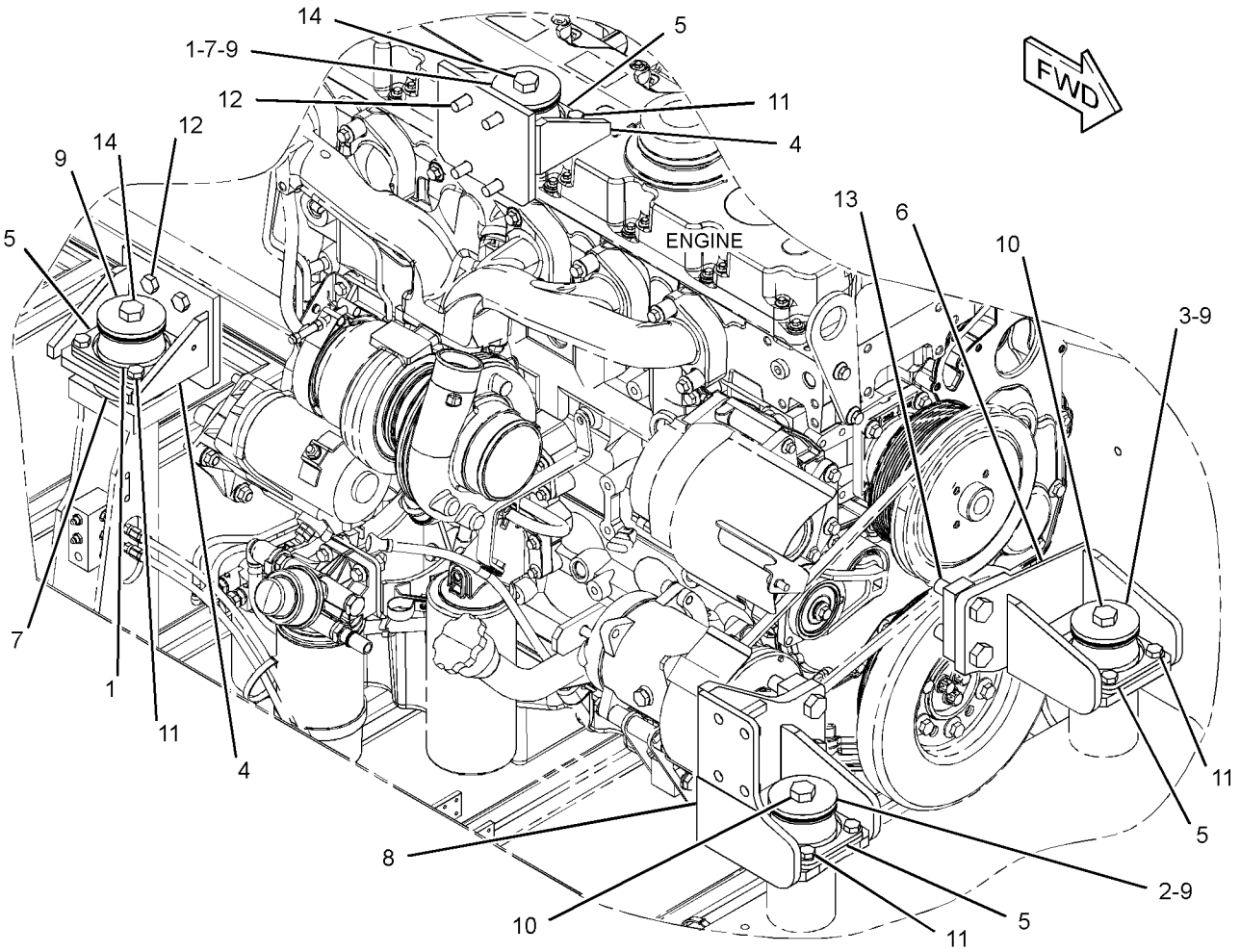

GRAPHIC #1 <END> g01324661

378-0594 PAN GP-OIL

S/N: E7A1-UP
WITHOUT OIL LEVEL SENSOR
PART OF 446-6728 ENGINE AR-PRIMARY
ALSO AN ATTACHMENT

SMCS-1302 **i07236242**

NOTE	REF NO	GRAPHIC REF	PART NUMBER	QTY	PART NAME 1 2 3 4 5 6 (PRODUCT LEVEL)	SEE PAGE
M	1	1	**8T-0269**	2	BOLT-SOCKET HEAD (M6X1X20-MM)	
M	2	1	**6I-0654**	1	BOLT (M10X1.5X25-MM)	
	3	1	**230-8094**	1	BRIDGE	
	4	1	**351-4749**	1	GASKET-OIL PAN	
	5	1	**539-7274**	1	PAN GP-OIL	
	5A	1	**8L-2786**	2	SEAL-O-RING	
	5B	1	**9S-4185**	2	PLUG (3/4-16-THD)	
M	6	1	**6I-0217**	28	BOLT (M8X1.25X20-MM)	
M	7	1	**6I-0260**	2	BOLT (M8X1.25X25-MM)	
M	8	1	**6I-0572**	3	BOLT (M8X1.25X20-MM)	
	9	1	**275-9897**	1	BRACKET	
	10	1	**285-2991**	1	TUBE AS-OIL SUCTION	
		1	**236-5511**	1	CLIP-PIPE	
	11	1	**6I-4681**	1	GASKET	

M - METRIC PART

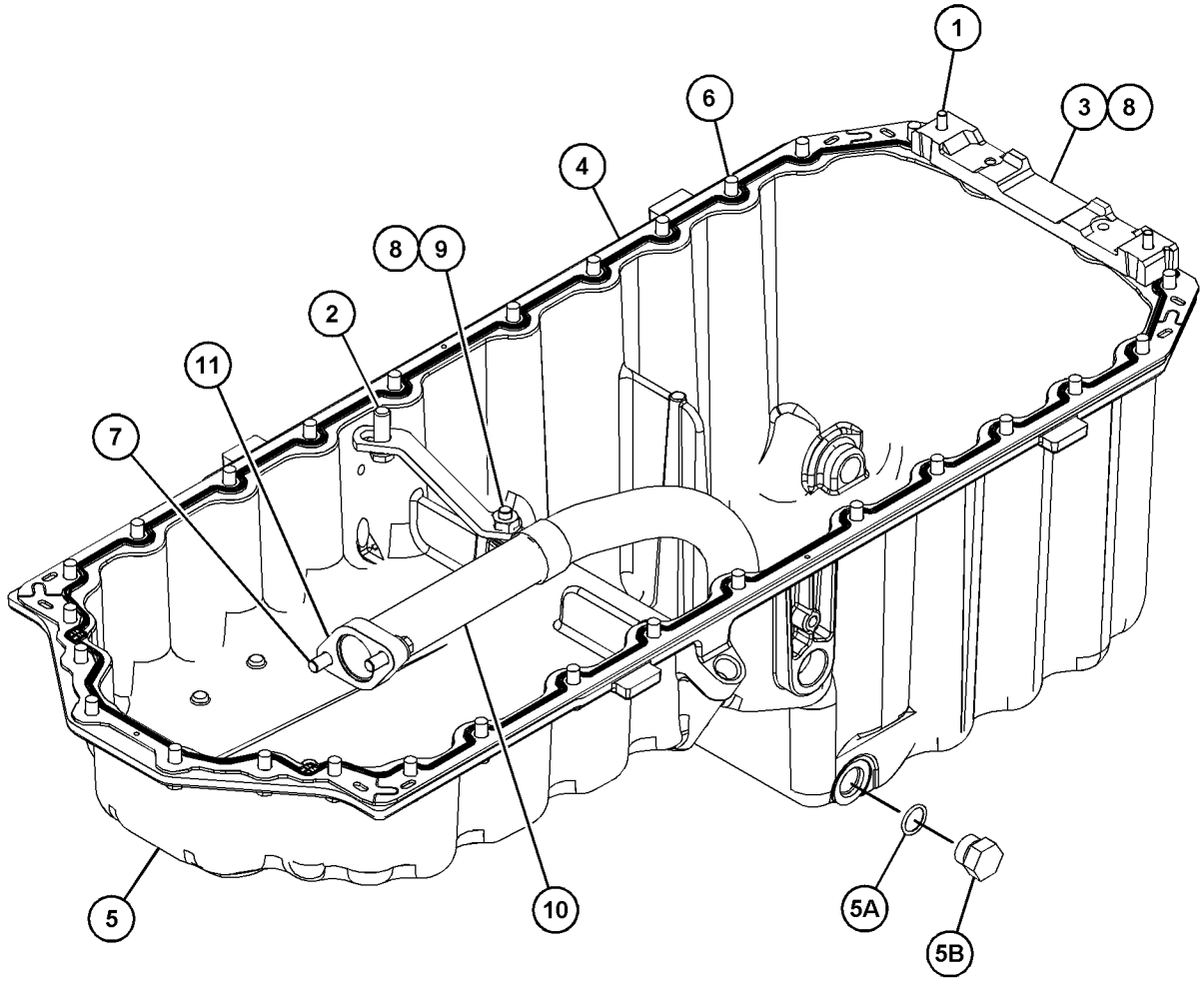

GRAPHIC #1 <END> g03650954

374-6301 PISTON & ROD GP

S/N: E7A1-UP
PART OF 446-6728 ENGINE AR-PRIMARY
ALSO AN ATTACHMENT

SMCS-1225 **i07383526**

NOTE	REF NO	GRAPHIC REF	PART NUMBER	QTY	PART NAME 1 2 3 4 5 6 (PRODUCT LEVEL)	SEE PAGE
	1	1	**331-0290**	6	CONNECTING ROD GP	
					(EACH INCLUDES)	
	1A	1	**276-7478**	1	BUSHING	
M	1B	1	**323-9312**	2	BOLT (M10X1X50-MM)	
J	2	1	*450-5996*	6	PISTON GP	
AB		1	**391-3732**		PISTON GP (0.5-MM OS)	
AB		1	**391-3735**		PISTON GP (1-MM OS)	
P	3	1	*317-5482*	6	BEARING	
P	4	1	*470-8038*	6	BEARING (LOWER)	
J	5	1	**124-3536**	12	RING-RETAINING	
					AVAILABLE REPAIR KIT(S):	
BC			**276-7476**	1	KIT-PISTON RING (STANDARD)	
					(INCLUDES RINGS)	
AB			**380-2065**		KIT-PISTON RING (0.5-MM OS)	
					(INCLUDES RINGS)	
AB			**466-4849**		KIT-PISTON RING (1-MM OS)	
					(INCLUDES RINGS)	
P			**436-7781**	1	KIT-BEARING (CONNECTING ROD) (STANDARD)	
					(INCLUDES BEARINGS)	
AB			**480-4489**		KIT-BEARING (0.254-MM US)	
					(INCLUDES BEARINGS)	
AB			**480-4490**		KIT-BEARING (0.51-MM US)	
					(INCLUDES BEARINGS)	
AB			**480-4491**		KIT-BEARING (0.762-MM US)	
					(INCLUDES BEARINGS)	
J			**444-2190**	1	KIT-PISTON	
					(INCLUDES PIN, PISTON RINGS, RETAINING RINGS & PISTON)	

A - NOT PART OF THIS GROUP
B - USE AS REQUIRED
C - CHANGE FROM PREVIOUS TYPE
J - KIT MARKED J SERVICES PART(S) MARKED J
M - METRIC PART
P - KIT MARKED P SERVICES PART(S) MARKED P

374-6301 **PISTON & ROD GP (**contd.**)** **i07383526**

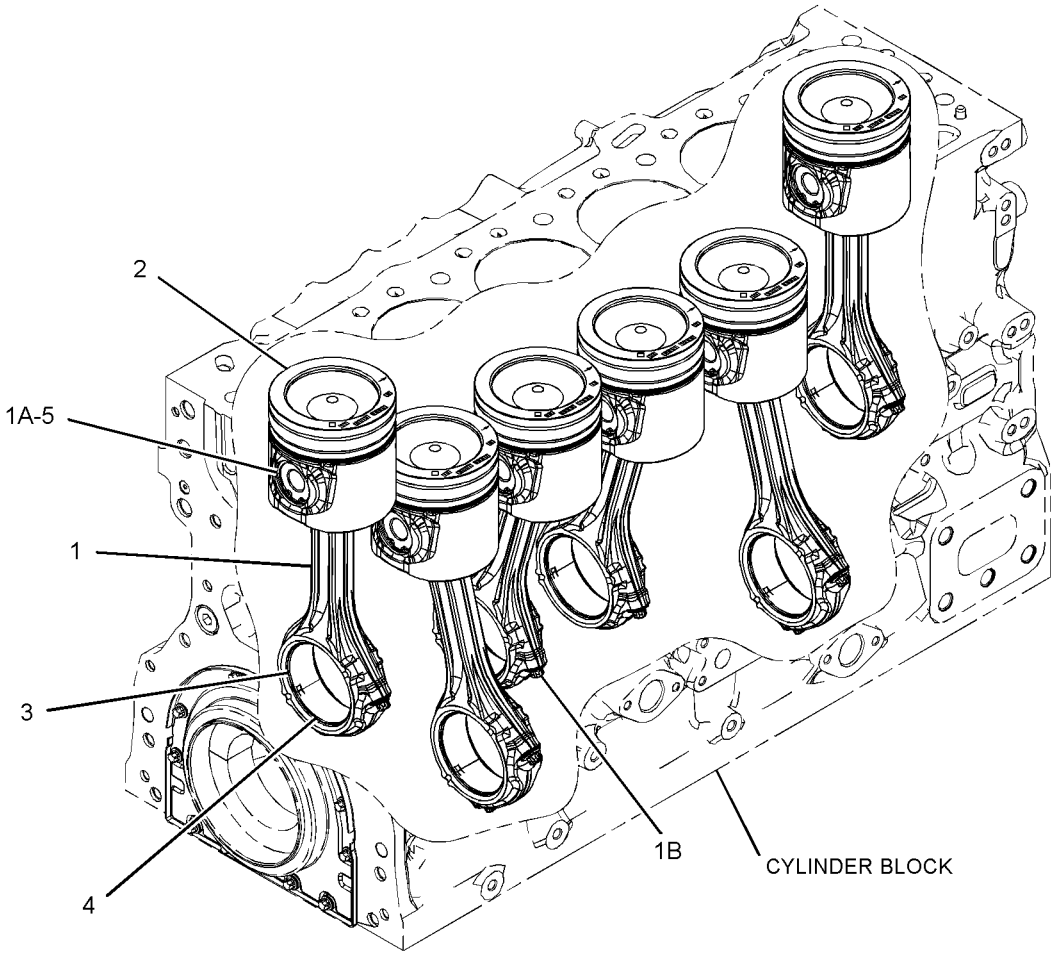

GRAPHIC #1 <END> g06158534

346-1478 PLUG GP-FLYWHEEL HOUSING

S/N: E7A1-UP
PART OF 446-6728 ENGINE AR-PRIMARY
ALSO AN ATTACHMENT

SMCS-1157 **i05938614**

NOTE	REF NO	GRAPHIC REF	PART NUMBER	QTY	PART NAME 1 2 3 4 5 6 (PRODUCT LEVEL)	SEE PAGE
	1	1	**6H-3616**	10	PLUG-PROTECTION	

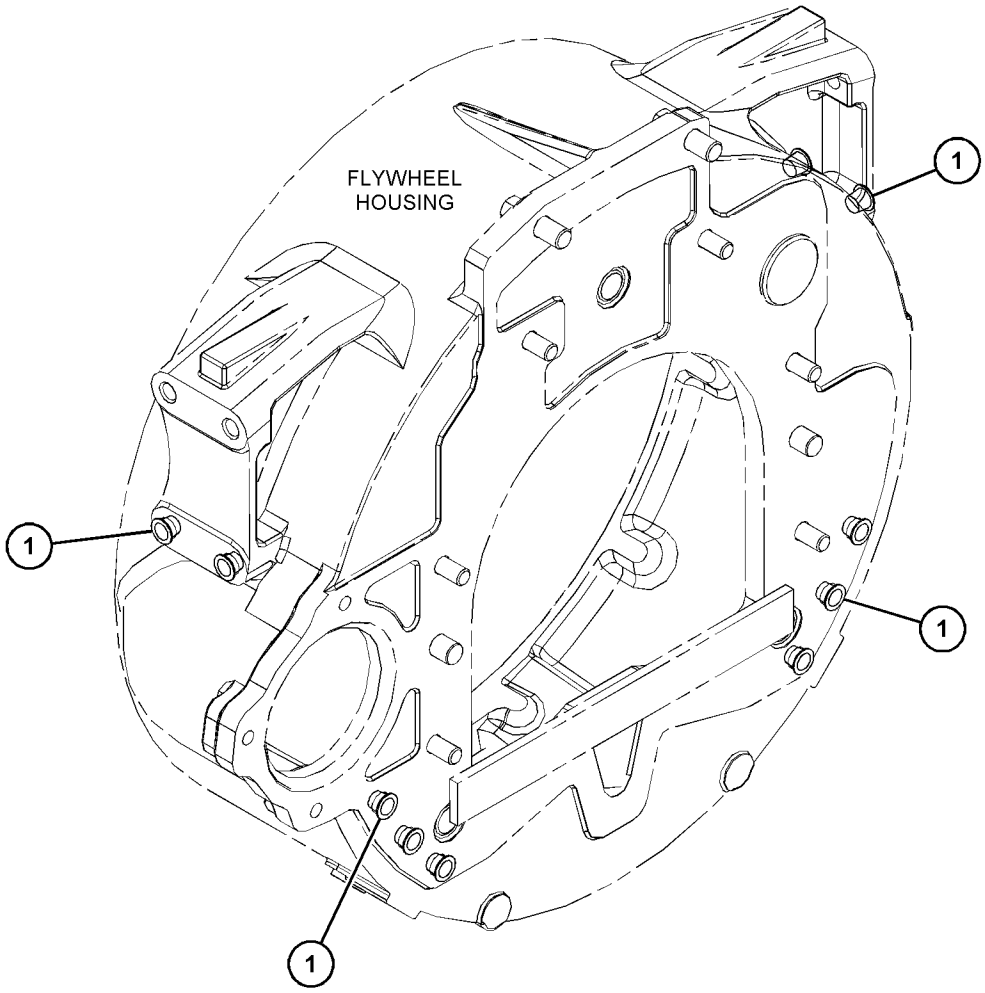

GRAPHIC #1 <END> g03651126

371-2554 PULLEY GP-CRANKSHAFT

S/N: E7A1-UP
PART OF 446-6728 ENGINE AR-PRIMARY
ALSO AN ATTACHMENT

SMCS-1205 **i05938616**

NOTE	REF NO	GRAPHIC REF	PART NUMBER	QTY	PART NAME 1 2 3 4 5 6 (PRODUCT LEVEL)	SEE PAGE
	1	1	**274-1931**	1	PULLEY (8-GROOVE)	
	2	1	**342-6502**	1	ADAPTER	
M	3	1	**342-6510**	3	BOLT-TORX (M14X1.5X70-MM)	
	4	1	**351-1724**	1	DAMPER	

M - METRIC PART

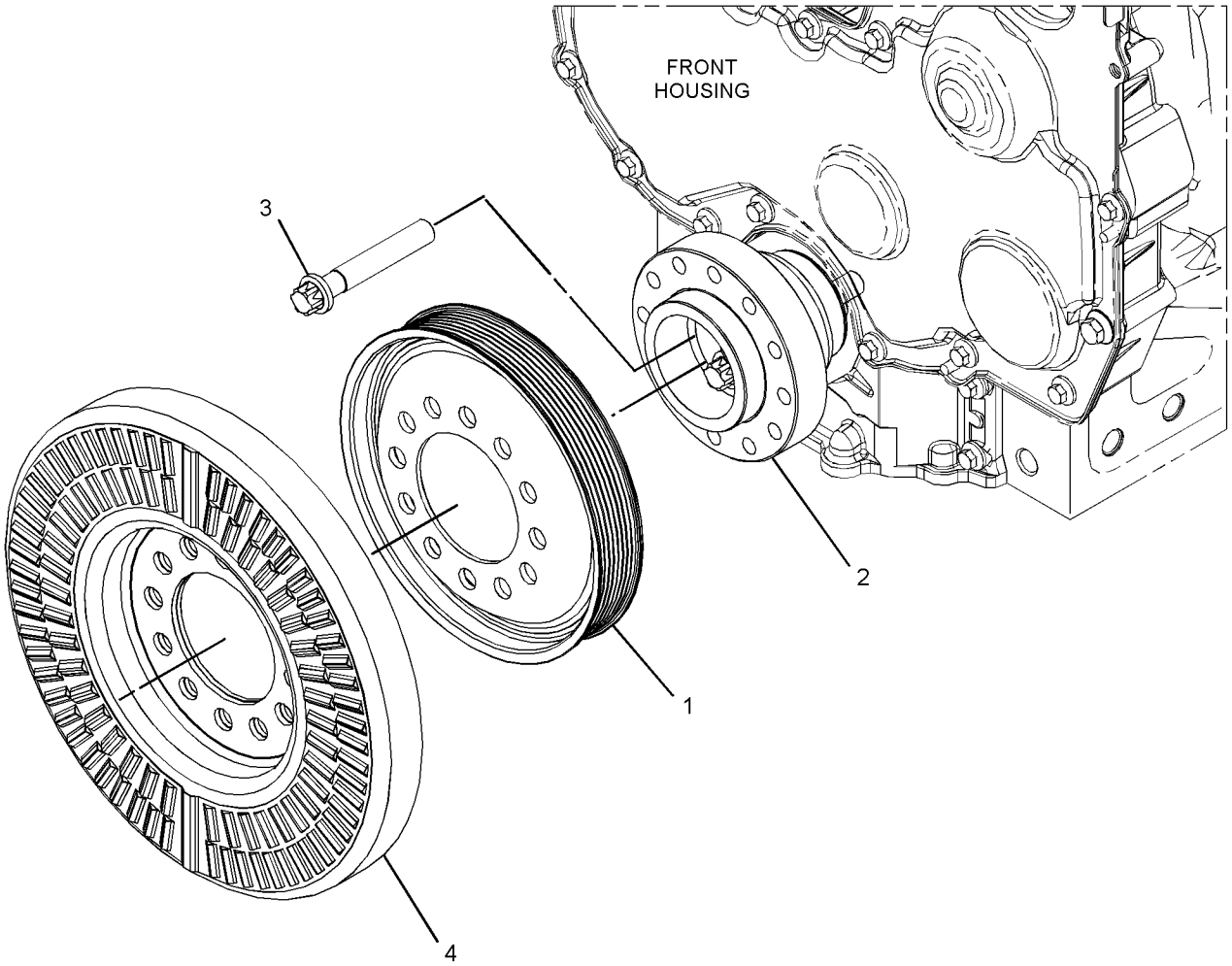

GRAPHIC #1 <END> g03110077

280-1911 ROCKER ARM GP

S/N: E7A1-UP
PART OF 371-2480 ROCKER ARM GP
ALSO AN ATTACHMENT

SMCS-1123 **i04526450**

NOTE	REF NO	GRAPHIC REF	PART NUMBER	QTY	PART NAME 1 2 3 4 5 6 (PRODUCT LEVEL)	SEE PAGE
	1	1	**276-9201**	1	CLIP	
	2	1	**276-9206**	5	SPRING-SHAFT	
	3	1	**276-9207**	1	SPRING-SHAFT	
	4	1	**277-5307**	1	SHAFT AS-ROCKER ARM	
	4A	1	**276-9200**	1	PLUG-SHAFT END	
	5	1	**278-5111**	6	ROCKER ARM AS	
					(EACH INCLUDES)	
	5A	1	**276-9230**	1	NUT	
	5B	1	**278-5113**	1	SCREW-ADJUSTING (TORX)	
	6	1	**278-5112**	6	ROCKER ARM AS	
					(EACH INCLUDES)	
	6A	1	**276-9230**	1	NUT	
	6B	1	**278-5113**	1	SCREW-ADJUSTING (TORX)	
	7	1	**280-1912**	6	BRACKET	
	8	1	**280-1913**	6	RETAINER	
	9	1	**280-1914**	12	BOLT (M8X1.25X55-MM)	

280-1911 **ROCKER ARM GP (**contd.**)** **i04526450**

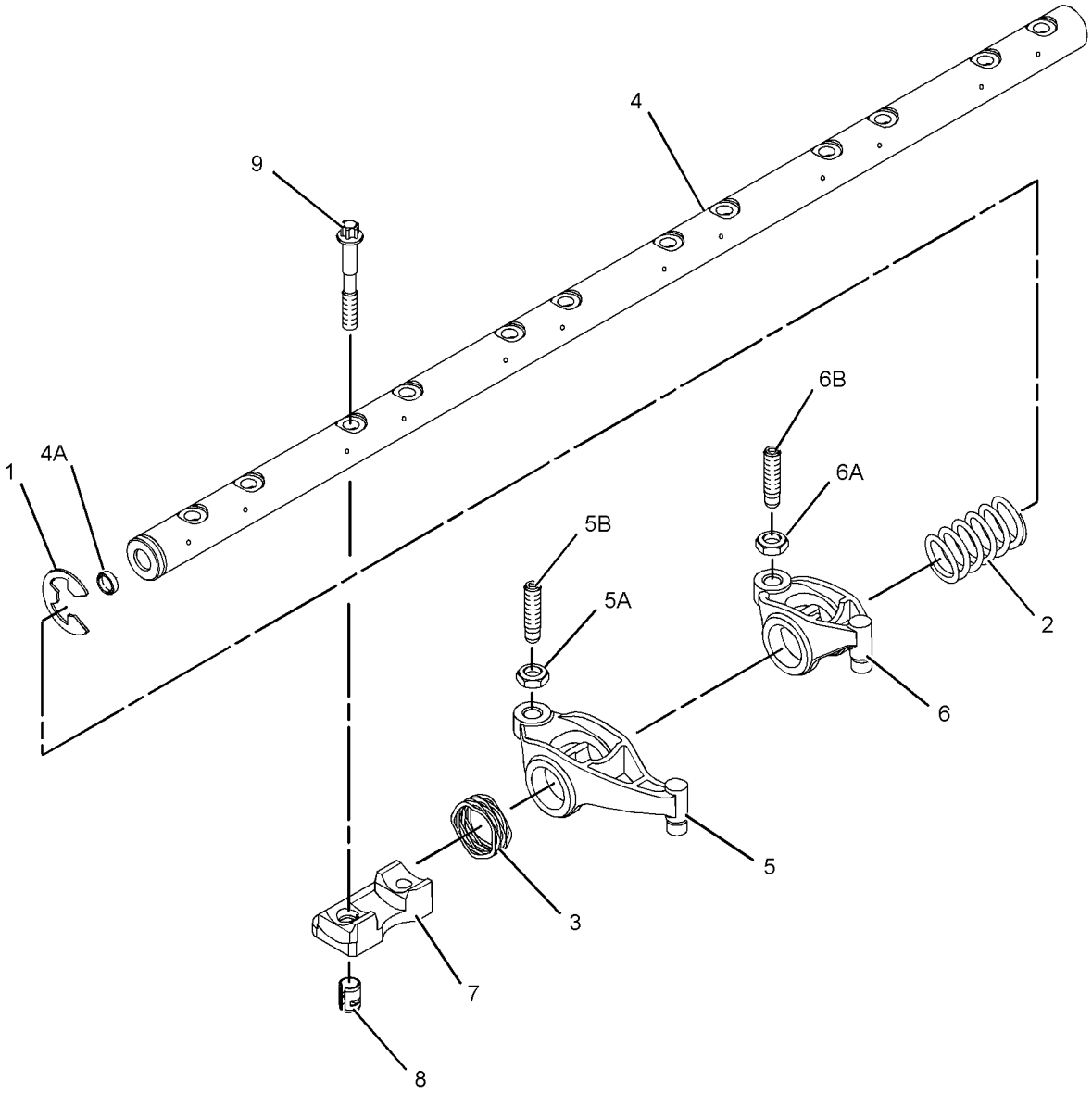

GRAPHIC #1 <END> g01235750

371-2480 ROCKER ARM GP

S/N: E7A1-UP
PART OF 446-6728 ENGINE AR-PRIMARY
ALSO AN ATTACHMENT

SMCS-1123 **i05773123**

NOTE	REF NO	GRAPHIC REF	PART NUMBER	QTY	PART NAME 1 2 3 4 5 6 (PRODUCT LEVEL)	SEE PAGE
	1	1	**436-0521**	24	SPRING-VALVE	
	2	1	**346-4709**	12	BRIDGE GP-VALVE	
	3	1	**276-8123**	48	COTTER-CAP	
	4	1	**276-8133**	24	CAP-VALVE	
Y	5	1	**280-1911**	1	ROCKER ARM GP	38
	6	1	**299-5511**	24	SEAL-VALVE STEM	
	7	1	**309-6678**	12	VALVE-INLET	
	8	1	**339-9637**	12	VALVE-EXHAUST	

Y - SEPARATE ILLUSTRATION

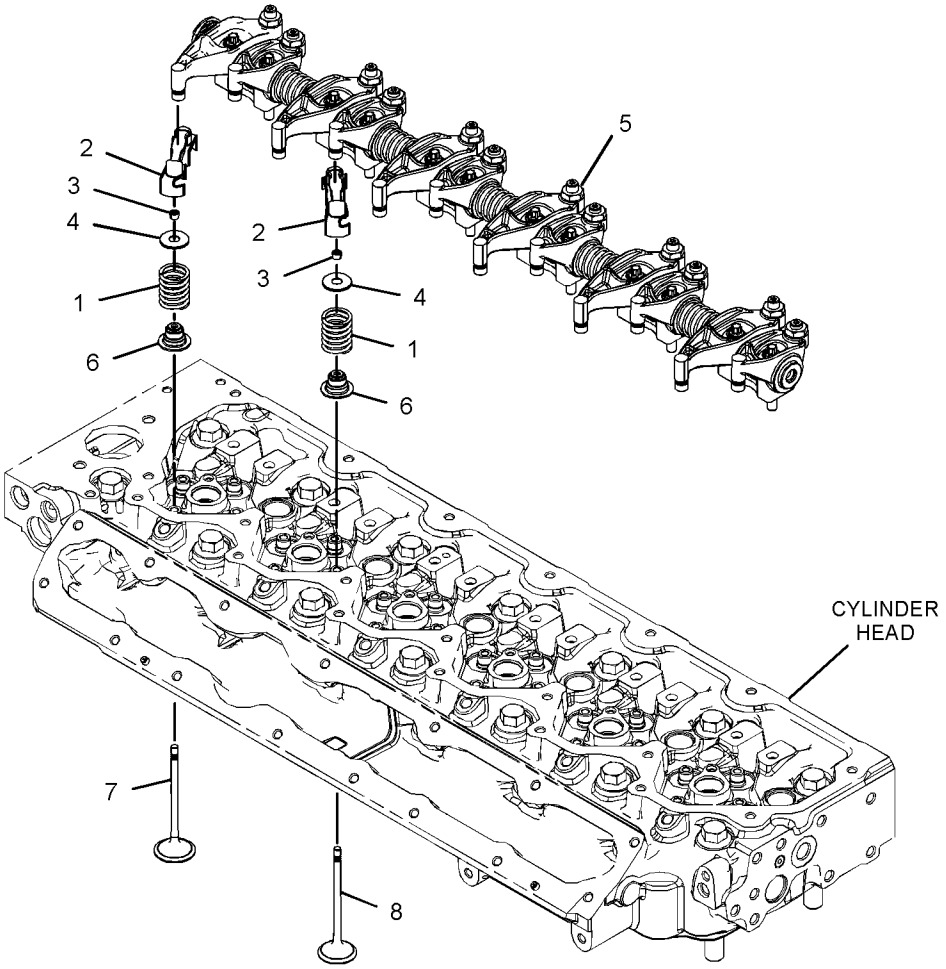

GRAPHIC #1 <END> g03103178

379-6626 FILLER GP-ENGINE OIL

S/N: E7A1-UP
PART OF 446-6728 ENGINE AR-PRIMARY
ALSO AN ATTACHMENT

SMCS-1316 **i05938545**

NOTE	REF NO	GRAPHIC REF	PART NUMBER	QTY	PART NAME 1 2 3 4 5 6 (PRODUCT LEVEL)	SEE PAGE
	1	1	**225-6522**	1	PLUG-CUP	
	2	1	**278-0017**	1	GASKET	
M	3	1	**6I-0260**	2	BOLT (M8X1.25X25-MM)	
	4	1	**385-5363**	1	FILLER GP-ENGINE OIL	
	4A	1	**359-1309**	1	CAP AS-FILLER (ENGINE OIL)	

M - METRIC PART

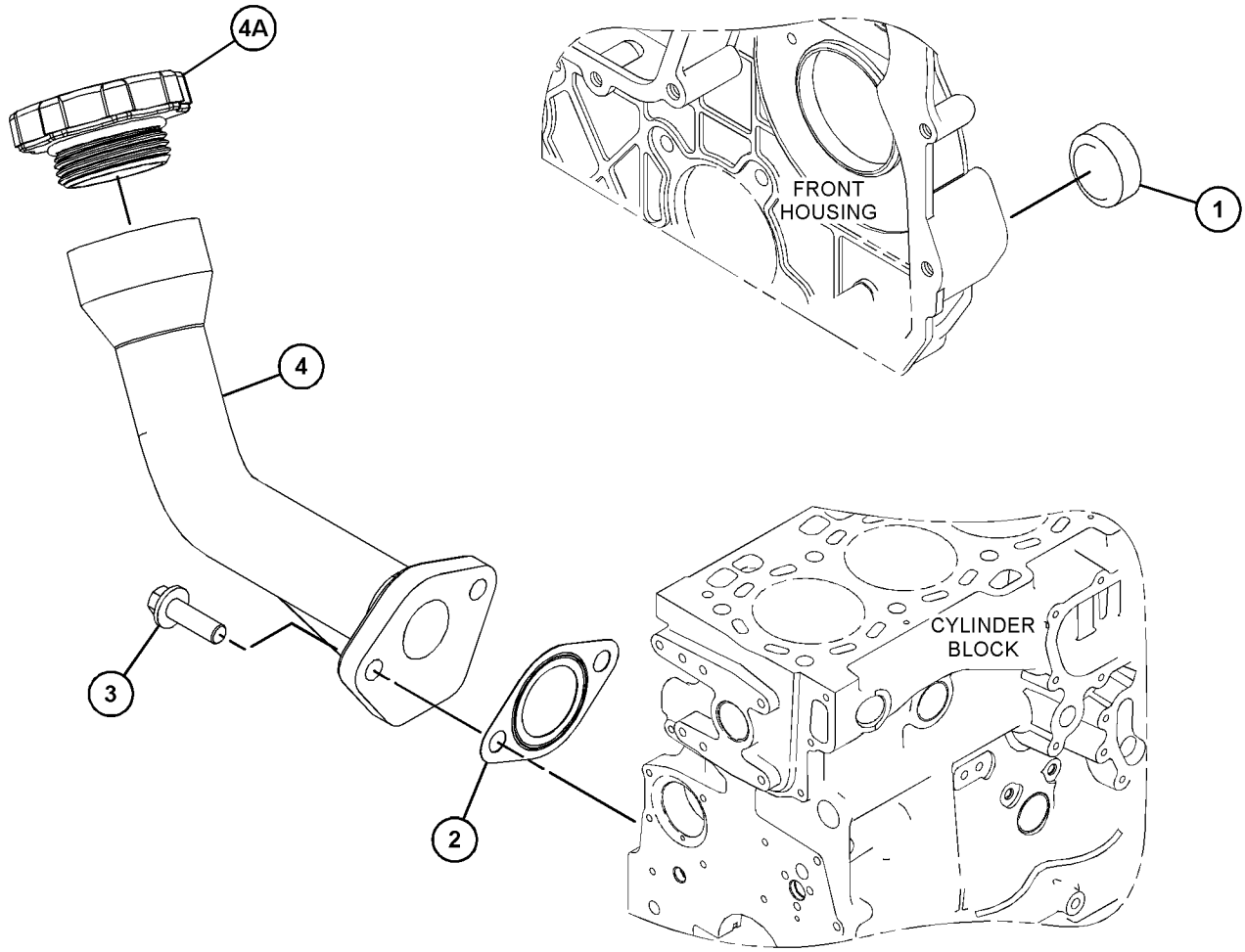

GRAPHIC #1 <END> g03730816

346-0220 FILTER GP-ENGINE OIL

S/N: E7A1-UP
PART OF 446-6728 ENGINE AR-PRIMARY
ALSO AN ATTACHMENT

SMCS-1308 **i05938564**

NOTE	REF NO	GRAPHIC REF	PART NUMBER	QTY	PART NAME 1 2 3 4 5 6 (PRODUCT LEVEL)	SEE PAGE
	1	1	**462-1171**	1	FILTER-ENGINE OIL	

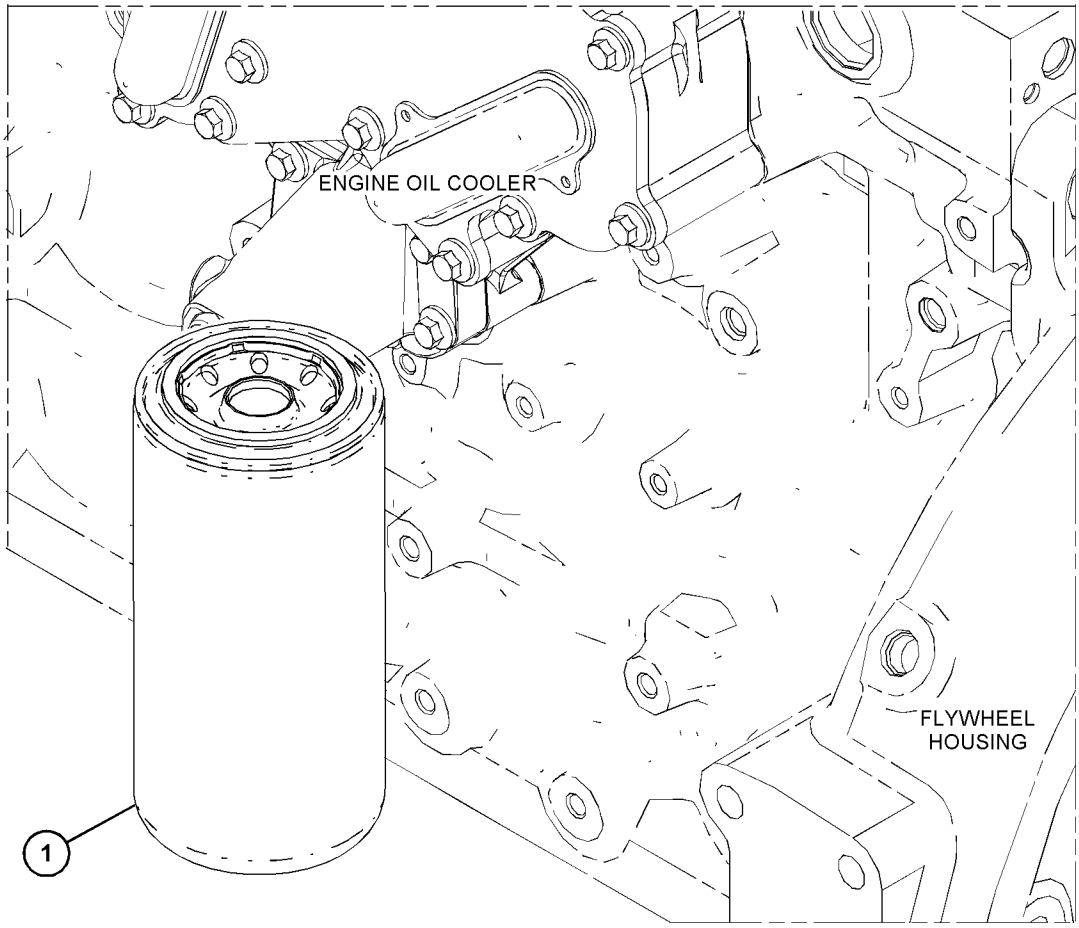

GRAPHIC #1 <END> g03710180

425-0197 FILTER GP-FUMES DISPOSAL

S/N: E7A1-UP
PART OF 446-6728 ENGINE AR-PRIMARY
ALSO AN ATTACHMENT

SMCS-1074 **i05938561**

NOTE	REF NO	GRAPHIC REF	PART NUMBER	QTY	PART NAME 1 2 3 4 5 6 (PRODUCT LEVEL)	SEE PAGE
	1	1	**273-5711**	1	FILTER-FUMES DISPOSAL	

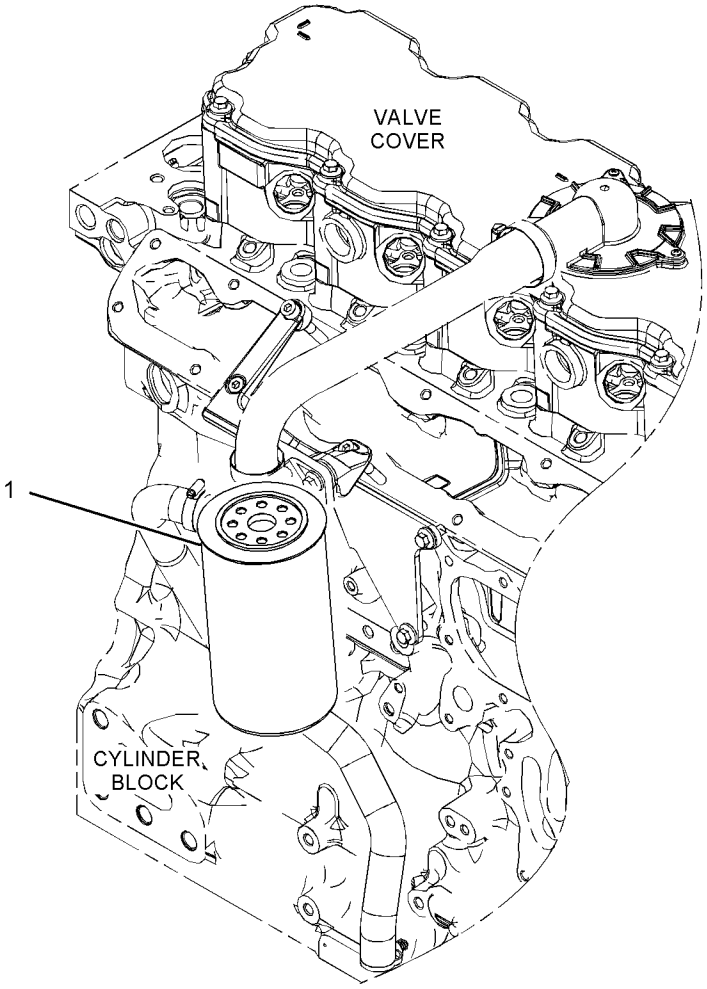

GRAPHIC #1 <END> g03380365

378-3484 GAUGE GP-OIL LEVEL (DIPSTICK)

S/N: E7A1-UP
ENGINE
PART OF 446-6728 ENGINE AR-PRIMARY
ALSO AN ATTACHMENT

SMCS-1326 **i07580191**

NOTE	REF NO	GRAPHIC REF	PART NUMBER	QTY	PART NAME 1 2 3 4 5 6 (PRODUCT LEVEL)	SEE PAGE
	1	1	**353-2636**	1	GAUGE GP-OIL LEVEL (DIPSTICK) (ENGINE)	
	1A	1	**228-7089**	1	SEAL-O-RING	
	1B	1	**275-9891**	2	SEAL-O-RING	
	2	1	**6I-0289**	1	PLUG	
	3	1	**6I-1497**	1	SEAL	

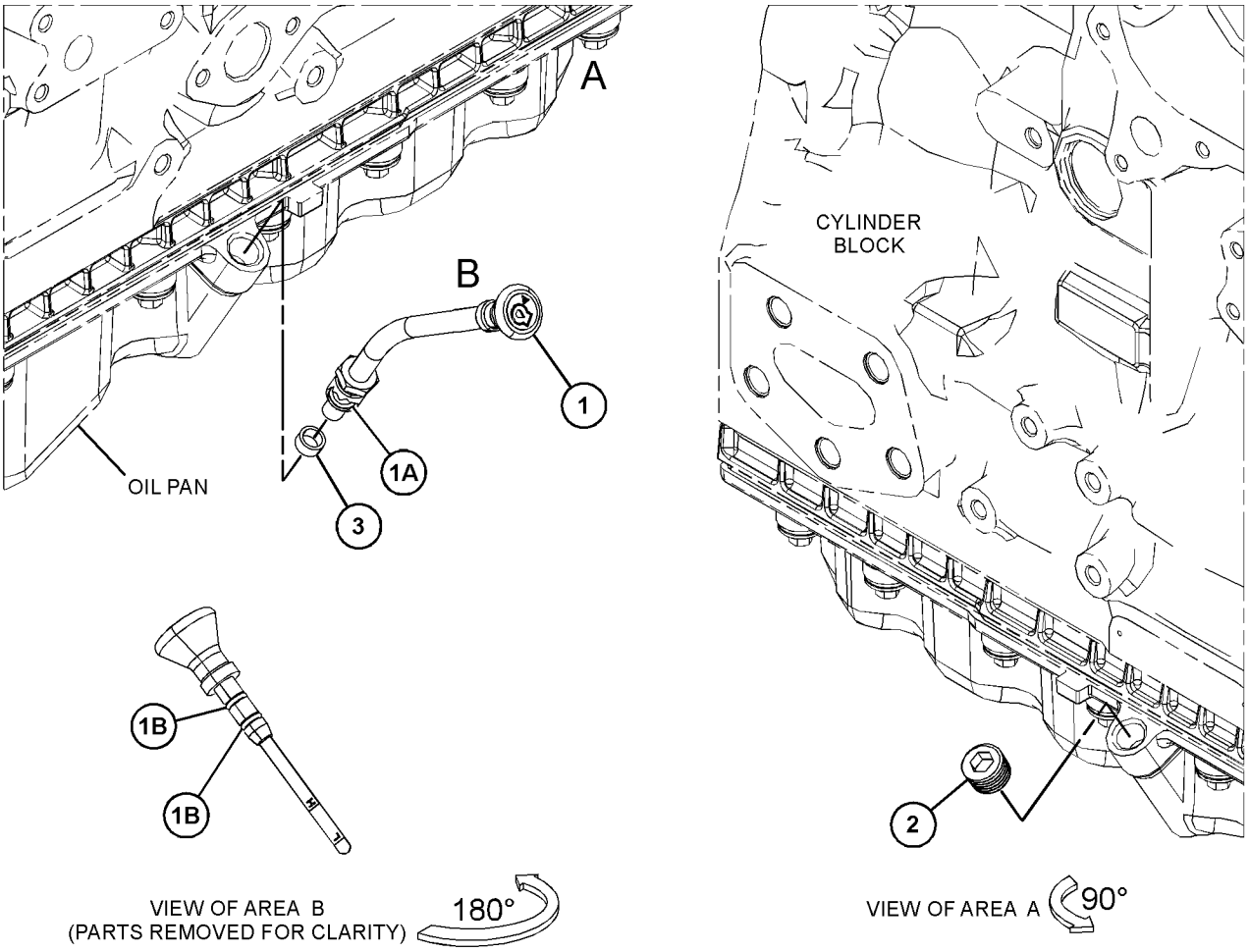

GRAPHIC #1 <END> g06390020

368-8559 LINES GP-TURBOCHARGER OIL

S/N: E7A1-UP
PART OF 380-2039 TURBOCHARGER GP
ALSO AN ATTACHMENT

SMCS-1052 **i05767279**

NOTE	REF NO	GRAPHIC REF	PART NUMBER	QTY	PART NAME 1 2 3 4 5 6 (PRODUCT LEVEL)	SEE PAGE
	1	1	**277-9938**	1	BOLT-SPECIAL (BANJO)	
	2	1	**277-9940**	1	SEAL-O-RING	
	3	1	**365-5823**	2	WASHER	

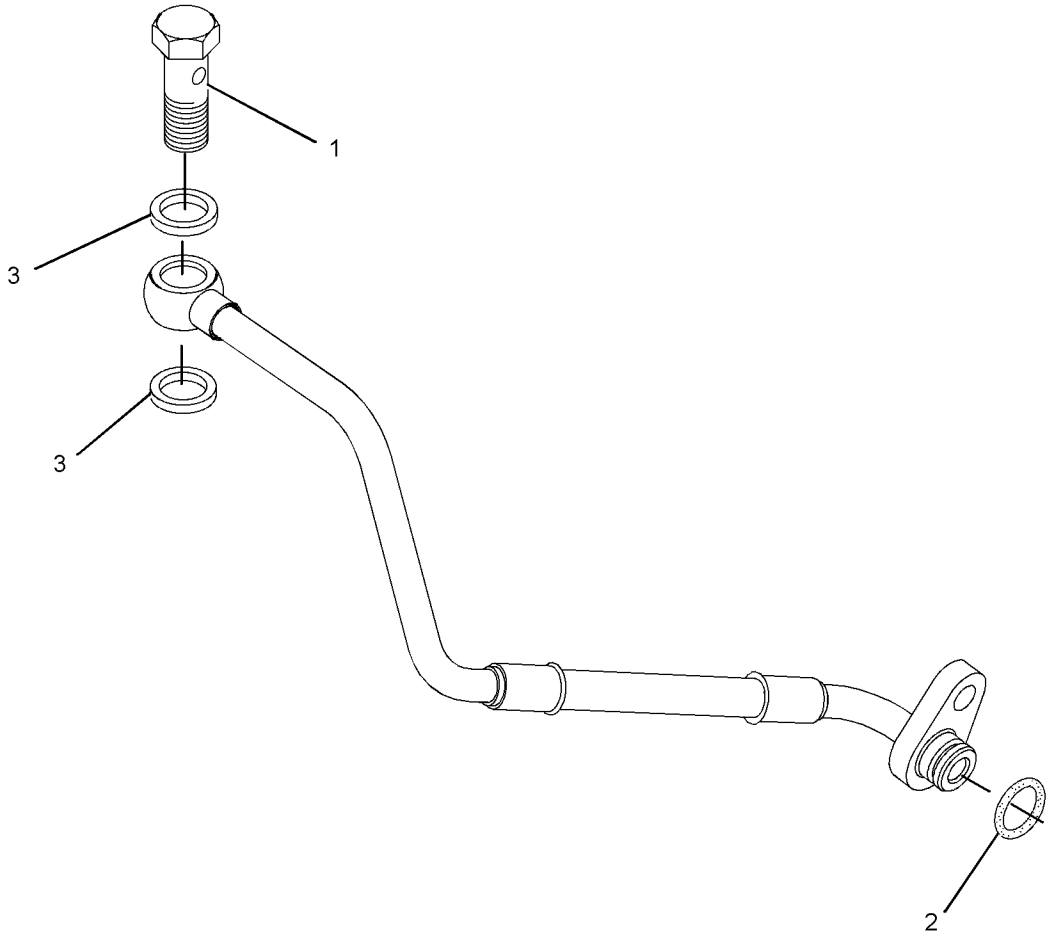

GRAPHIC #1 <END> g02400339

346-0737 PUMP GP-ENGINE OIL

S/N: E7A1-UP
PART OF 446-6728 ENGINE AR-PRIMARY
ALSO AN ATTACHMENT

SMCS-1304, 1315 **i06300017**

NOTE	REF NO	GRAPHIC REF	PART NUMBER	QTY	PART NAME 1 2 3 4 5 6 (PRODUCT LEVEL)	SEE PAGE
	1	1	**373-8014**	1	PUMP-OIL	
M	2	1	**6I-1090**	4	BOLT (M8X1.25X40-MM)	

M - METRIC PART

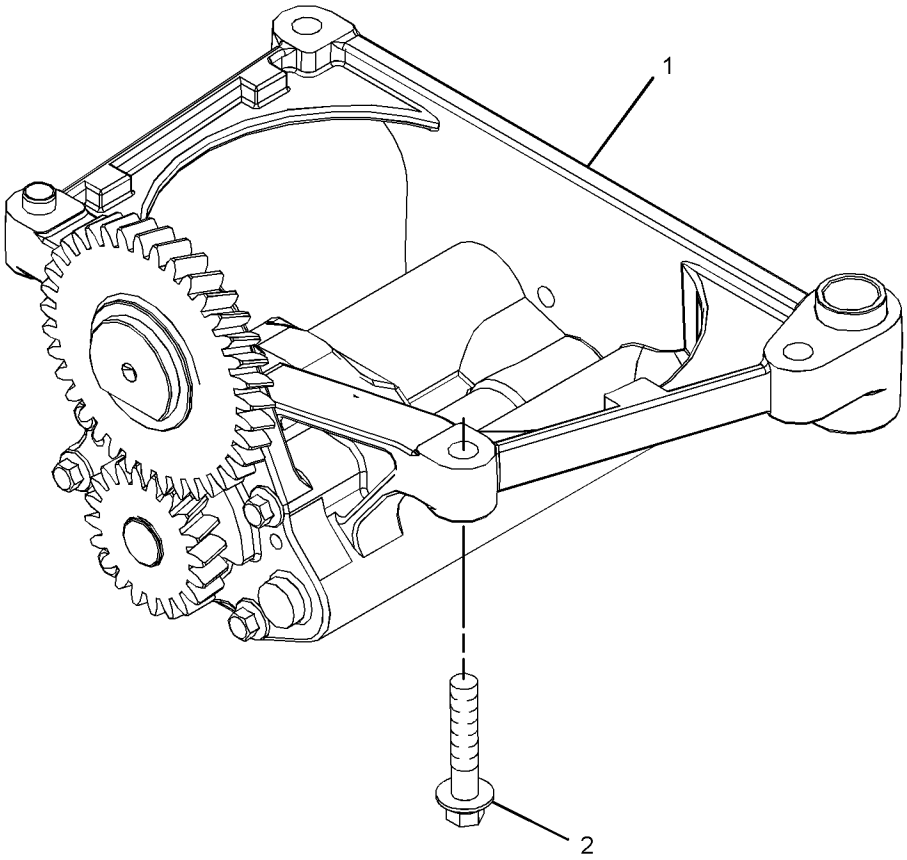

GRAPHIC #1 <END> g02815299

462-6685 PUMP GP-ENGINE OIL

S/N: E7A1-UP
PART OF 446-6728 ENGINE AR-PRIMARY
ALSO AN ATTACHMENT

SMCS-1304, 1315 **i07025293**

NOTE	REF NO	GRAPHIC REF	PART NUMBER	QTY	PART NAME 1 2 3 4 5 6 (PRODUCT LEVEL)	SEE PAGE
	1	1	**420-0454**	1	PUMP AS-OIL	
M	2	1	**6I-1090**	4	BOLT (M8X1.25X40-MM)	

M - METRIC PART

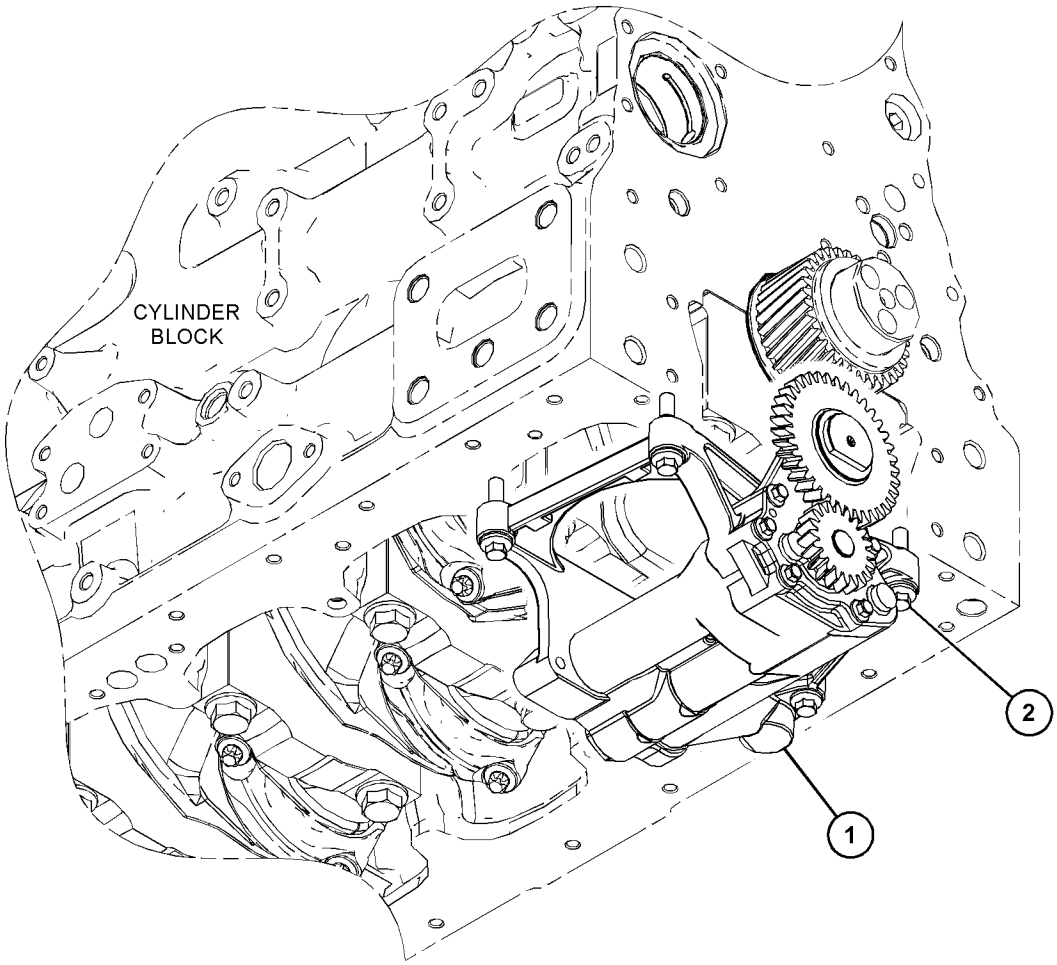

GRAPHIC #1 <END> g03797853

371-2745 VALVE GP-FLUID SAMPLING

S/N: E7A1-UP
PART OF 446-6728 ENGINE AR-PRIMARY
ALSO AN ATTACHMENT

SMCS-7542 **i05938621**

NOTE	REF NO	GRAPHIC REF	PART NUMBER	QTY	PART NAME 1 2 3 4 5 6 (PRODUCT LEVEL)	SEE PAGE
	1	1	**216-9633**	1	VALVE AS-FLUID SAMPLING	
	2	1	**8C-3445**	1	CAP-DUST	

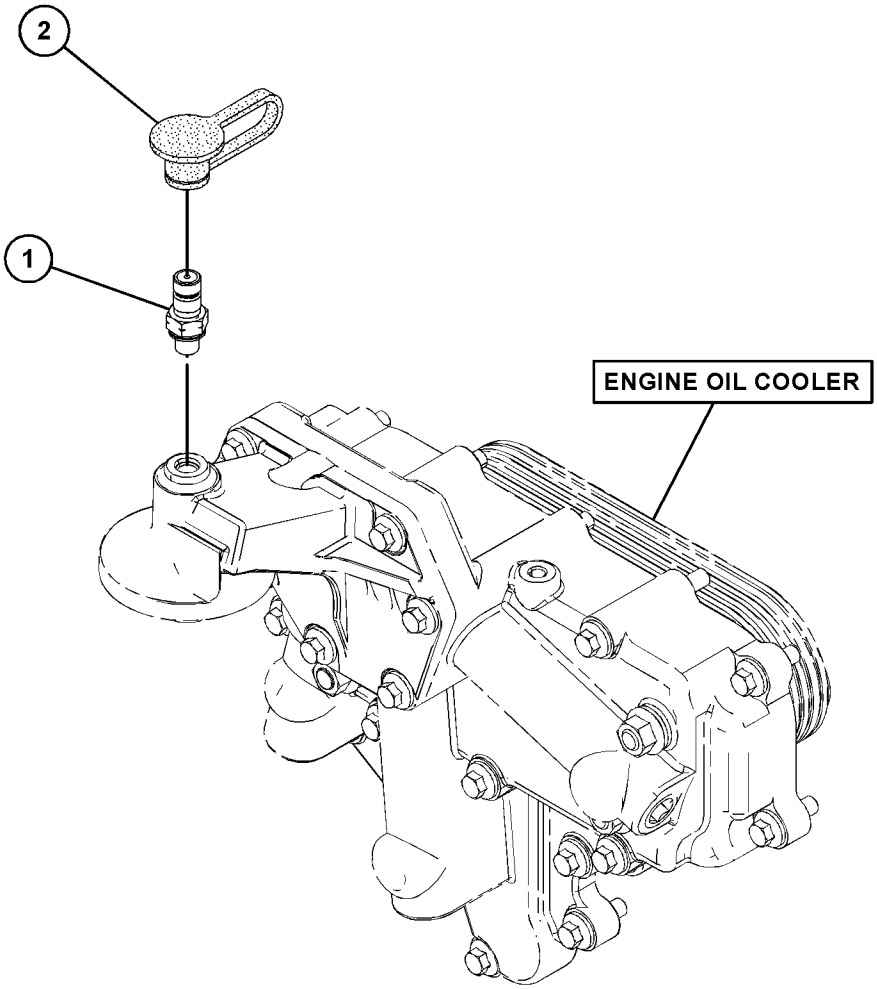

GRAPHIC #1 <END> g03178016

346-2911 CONNECTION GP-HEATER

S/N: E7A1-UP
FOR USE WITH OPTIONAL CUSTOMER CONNECTION FOR CAB HEATER
PART OF 446-6728 ENGINE AR-PRIMARY
ALSO AN ATTACHMENT

SMCS-1380, 1383 **i06229479**

NOTE	REF NO	GRAPHIC REF	PART NUMBER	QTY	PART NAME 1 2 3 4 5 6 (PRODUCT LEVEL)	SEE PAGE
	1	1	**067-6823**	1	PLUG	
	2	1	**9X-3959**	1	ELBOW	
	3	1	**474-1553**	1	ADAPTER	

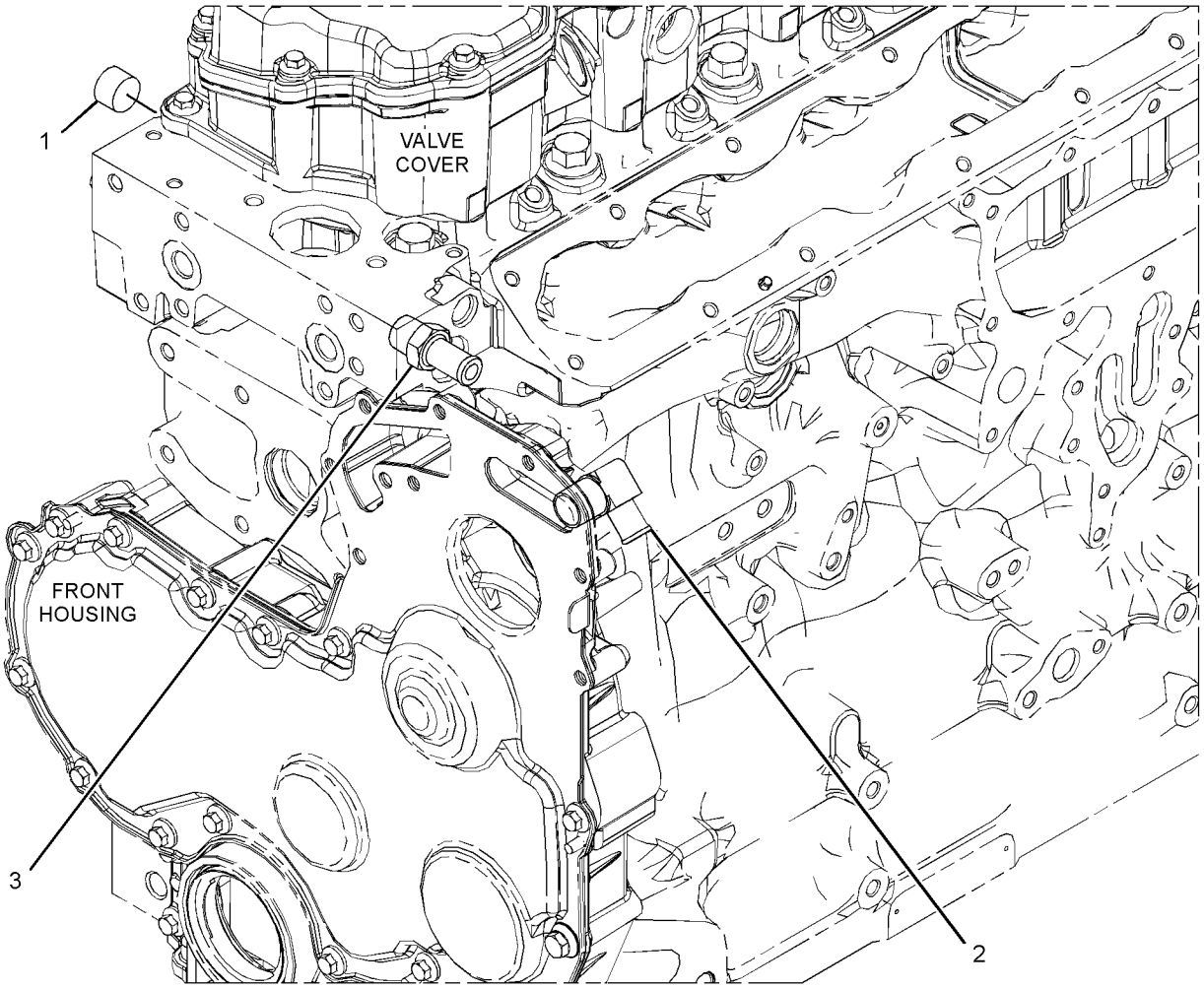

GRAPHIC #1 <END> g03105759

373-3606 CONNECTION GP-WATER

S/N: E7A1-UP
PART OF 446-6728 ENGINE AR-PRIMARY
ALSO AN ATTACHMENT

SMCS-1380 **i05536525**

NOTE	REF NO	GRAPHIC REF	PART NUMBER	QTY	PART NAME 1 2 3 4 5 6 (PRODUCT LEVEL)	SEE PAGE
M	1	1	**123-2899**	1	BOLT (M10X1.5X40-MM)	
	2	1	**367-1817**	1	CONNECTION AS (INCLUDES TEMPERATURE REGULATOR)	
	2A	1	**367-8509**	1	SEAL-BONDED	
	2B	1	**367-8512**	1	PLUG	
M	3	1	**103-5687**	1	BOLT (M10X1.5X85-MM)	
	4	1	**281-8744**	1	GASKET-WATER REGULATOR	

M - METRIC PART

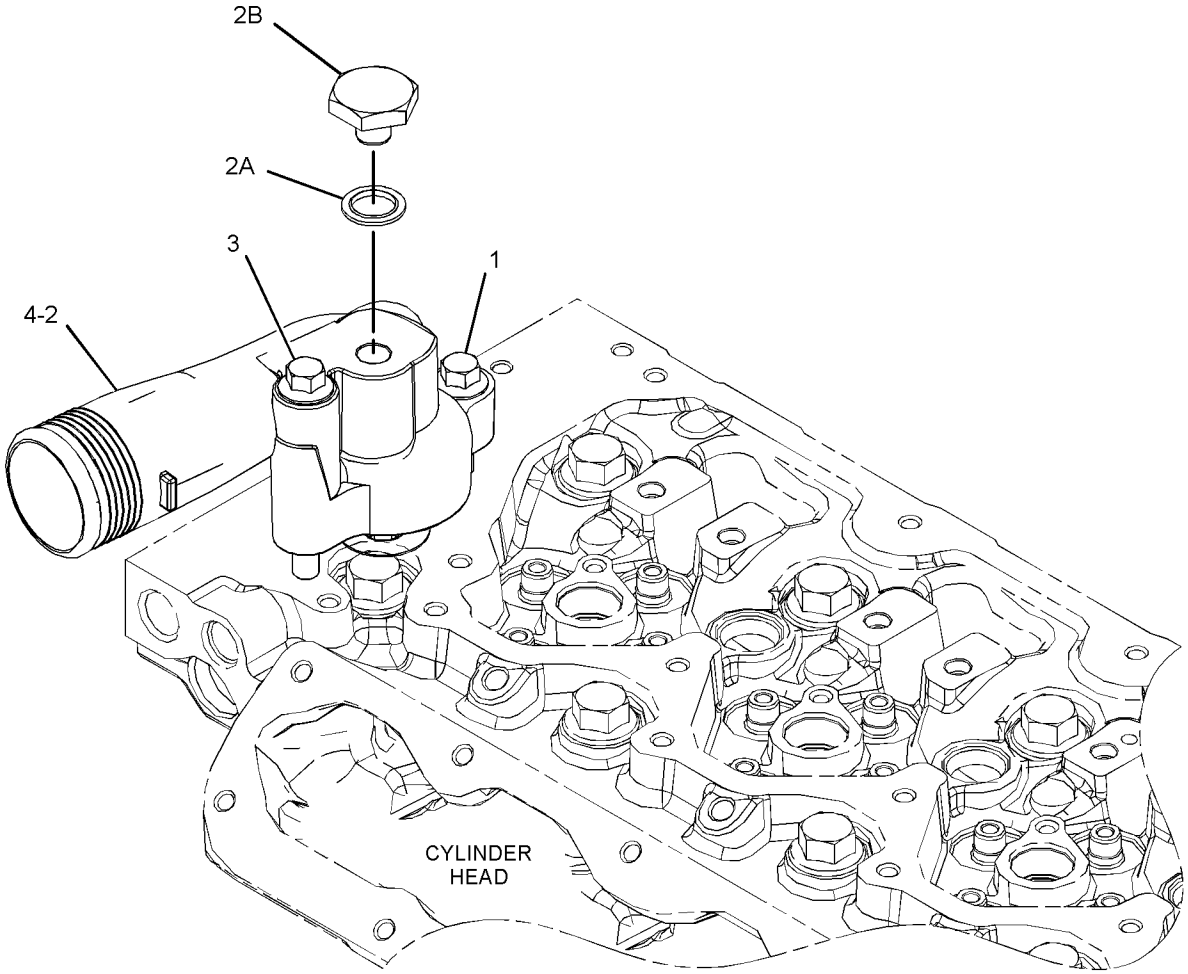

GRAPHIC #1 <END> g03483203

326-7401 COOLER GP-ENGINE OIL

S/N: E7A1-UP
PART OF 346-0097 COOLER GP-ENGINE OIL
ALSO AN ATTACHMENT

SMCS-1378 **i06300018**

NOTE	REF NO	GRAPHIC REF	PART NUMBER	QTY	PART NAME 1 2 3 4 5 6 (PRODUCT LEVEL)	SEE PAGE
M	1	1	**6I-0260**	1	BOLT (M8X1.25X25-MM)	
M	2	1	**6I-4793**	6	BOLT (M8X1.25X50-MM)	
	3	1	**277-2500**	1	GASKET	
	4	1	**281-7039**	1	COOLER-OIL (ENGINE)	
	5	1	**281-7040**	1	GASKET	

M - METRIC PART

326-7401 **COOLER GP-ENGINE OIL (**contd.**)** **i06300018**

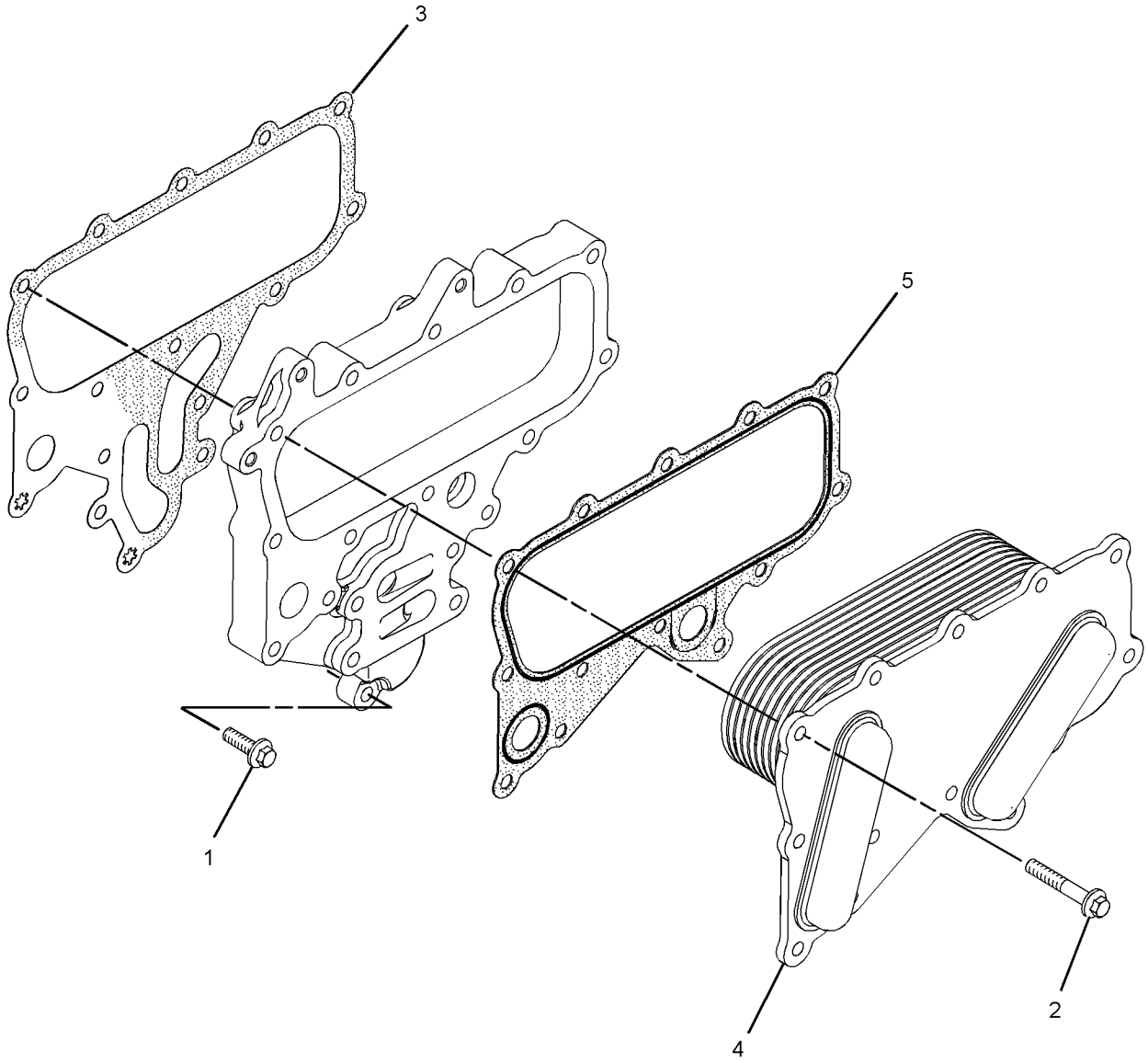

GRAPHIC #1 <END> g01508024

346-0097 COOLER GP-ENGINE OIL

S/N: E7A1-UP
PART OF 446-6728 ENGINE AR-PRIMARY
ALSO AN ATTACHMENT

SMCS-1378 **i07656758**

NOTE	REF NO	GRAPHIC REF	PART NUMBER	QTY	PART NAME 1 2 3 4 5 6 (PRODUCT LEVEL)	SEE PAGE
	1	1	**225-7944**	2	GASKET	
	2	1	**232-3751**	1	PLATE	
M	3	1	**6I-4793**	11	BOLT (M8X1.25X50-MM)	
	4	1	**502-2115**	1	HEAD AS-OIL FILTER	
Y	5	1	**326-7401**	1	COOLER GP-ENGINE OIL	51
	6	1	**367-7142**	1	TUBE AS-OIL	
M	7	1	**6I-0260**	4	BOLT (M8X1.25X25-MM)	
M	8	1	**6I-0456**	4	BOLT (M8X1.25X45-MM)	

M - METRIC PART
Y - SEPARATE ILLUSTRATION

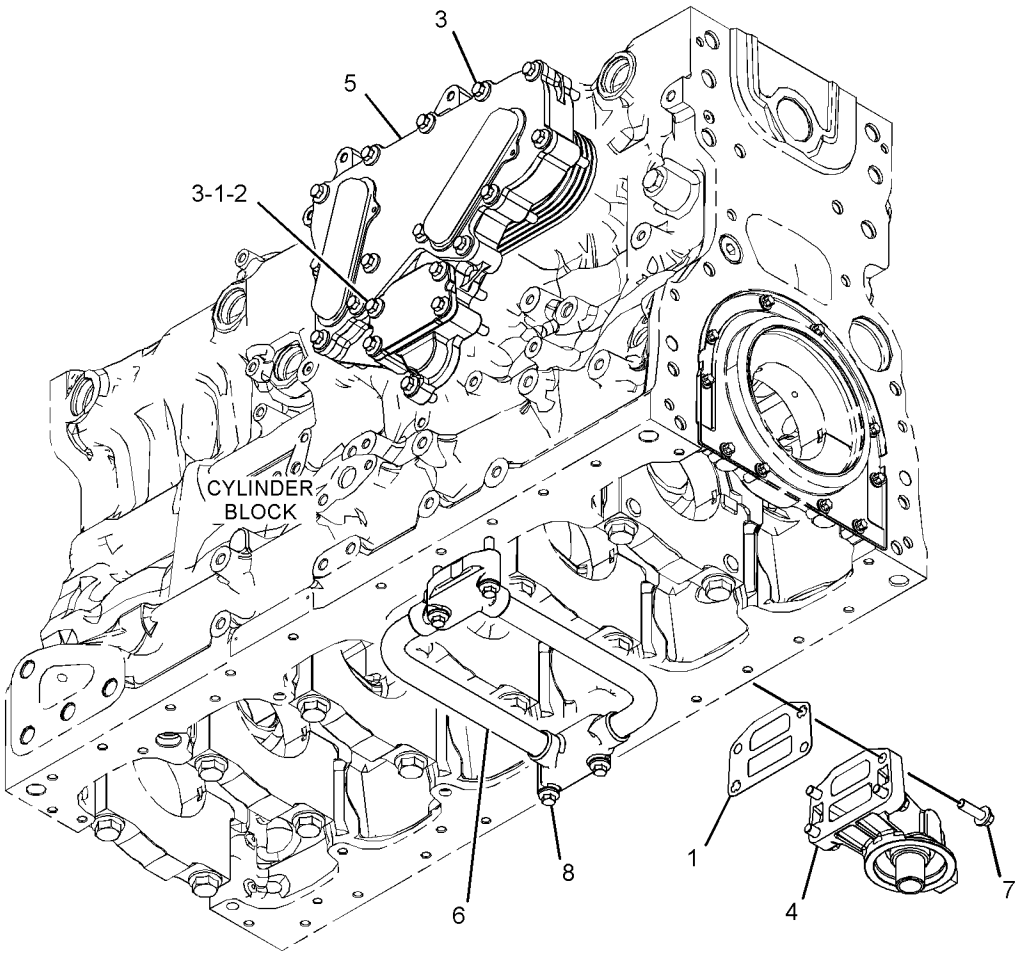

GRAPHIC #1 <END> g03776103

454-7364 COOLING AR

S/N: CH91-UP
PART OF 449-2823 COMMON AR
ALSO AN ATTACHMENT

SMCS-1350 **i06819111**

NOTE	PART NUMBER	QTY	PART NAME 1 2 3 4 5 6 (PRODUCT LEVEL)	SEE PAGE
Y	*419-6583*	1	AFTERCOOLER GP-AIR	67
Y	*269-9105*	1	COVER GP-PROTECTION	55
Y	*186-0507*	1	FAN GP-SUCTION (ENGINE COOLANT, HYDRAULIC OIL)	56
Y	*253-9843*	1	FAN GP-SUCTION (AFTERCOOLER)	57
			S/N: CH91-136	
Y	*466-9074*	1	FAN GP-SUCTION	58
			S/N: CH9137-UP	
Y	*253-9837*	1	GUARD GP-FAN (ENGINE COOLANT, HYDRAULIC OIL)	59
Y	*253-9844*	1	GUARD GP-FAN (AFTERCOOLER)	60
Y	*454-7365*	1	LINES GP-COOLANT	61
Y	*272-2773*	1	LINES GP-HYDRAULIC FAN	491
			—OR—	
Y	*475-2054*	1	LINES GP-HYDRAULIC FAN	495
Y	*253-9836*	1	MOTOR GP-GEAR (HYDRAULIC FAN)	583
Y	*419-6587*	1	RADIATOR & MOUNTING GP	64
Y	*253-9849*	1	WIRING GP-FAN (RADIATOR)	215

Y - SEPARATE ILLUSTRATION

<END>

269-9105 COVER GP-PROTECTION—HYDRAULIC FAN

S/N: CH91-UP
PART OF 454-7364 COOLING AR
ALSO AN ATTACHMENT

SMCS-7315 **i05934409**

NOTE	REF NO	GRAPHIC REF	PART NUMBER	QTY	PART NAME 1 2 3 4 5 6 (PRODUCT LEVEL)	SEE PAGE
	1	1	**259-6812**	1	PLATE AS	
	2	1	**5P-4116**	1	WASHER-HARD (8.8X20.5X2-MM THK)	
M	3	1	**8T-4908**	1	BOLT (M8X1.25X25-MM)	

M - METRIC PART

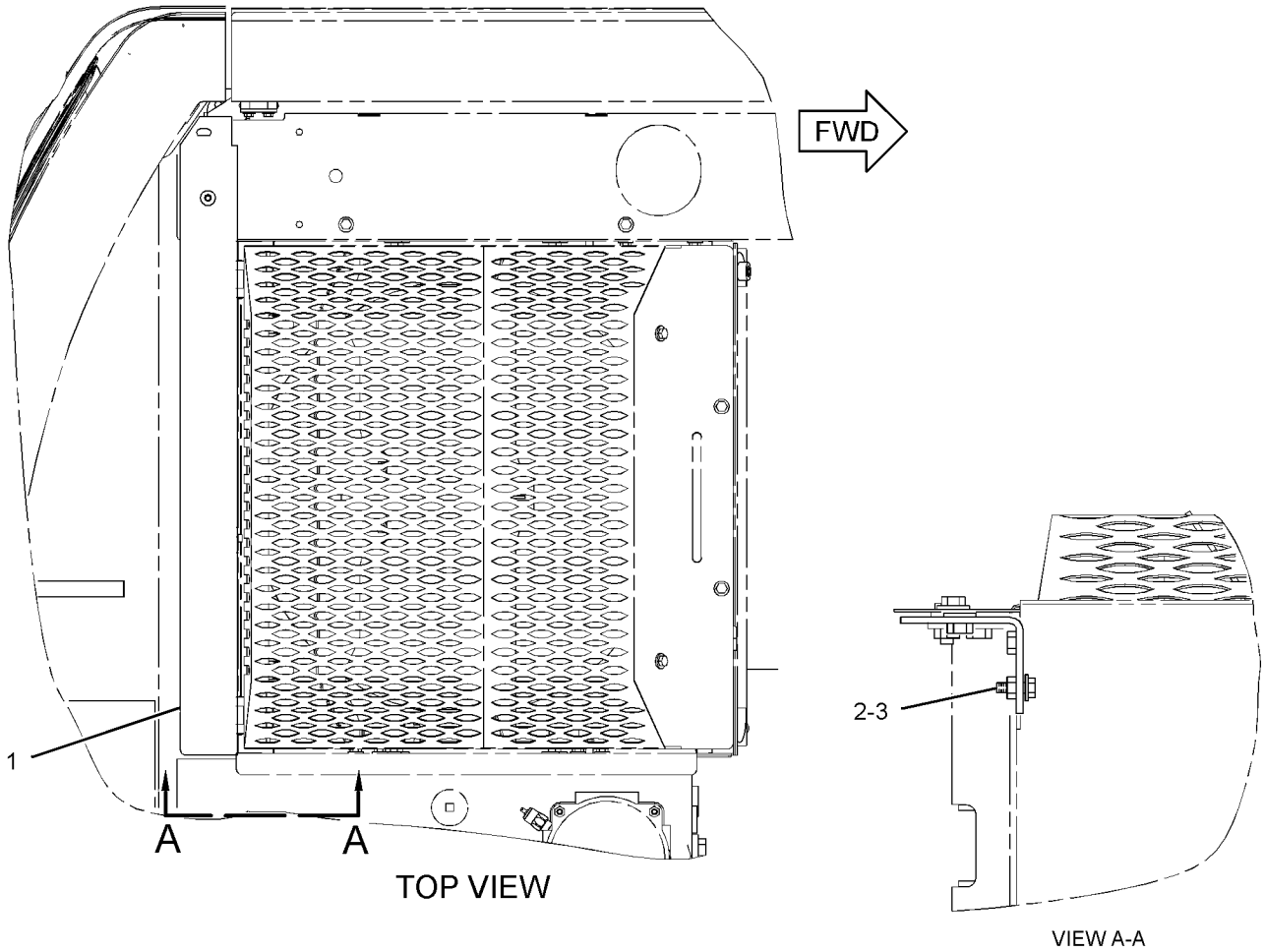

GRAPHIC #1 <END> g01326155

186-0507 FAN GP-SUCTION—ENGINE COOLANT, HYDRAULIC OIL

S/N: CH91-UP
9-BLADE
PART OF 454-7364 COOLING AR
ALSO AN ATTACHMENT

SMCS-1356 **i05495050**

NOTE	REF NO	GRAPHIC REF	PART NUMBER	QTY	PART NAME 1 2 3 4 5 6 (PRODUCT LEVEL)	SEE PAGE
	1	1	**196-1757**	1	ADAPTER	
	2	1	**197-6548**	1	SPIDER AS-FAN (9-BLADE)	
M	3	1	**8T-4189**	4	BOLT (M8X1.25X20-MM)	
	4	1	**8T-4224**	4	WASHER-HARD (8.8X16X2-MM THK)	

M - METRIC PART

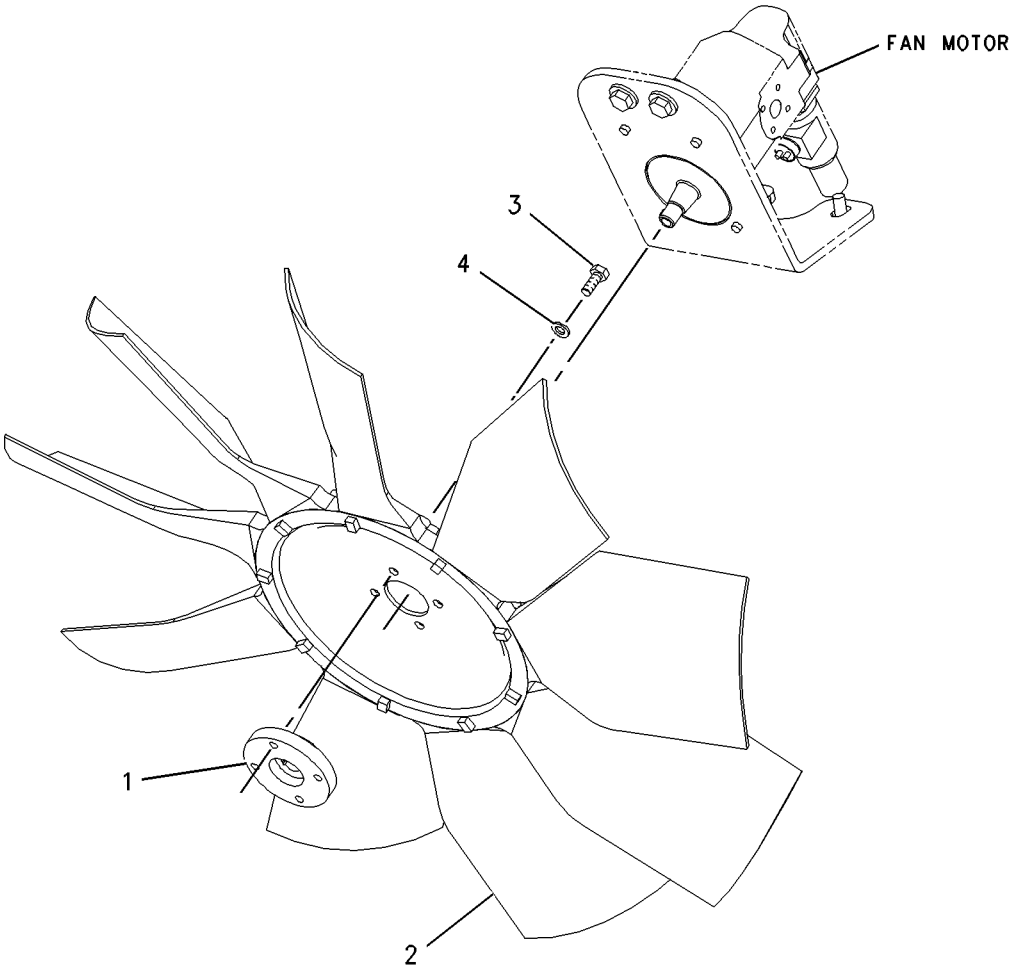

GRAPHIC #1 <END> g00829091

253-9843 FAN GP-SUCTION—AFTERCOOLER

S/N: CH91-136
7-BLADE
PART OF 454-7364 COOLING AR
ALSO AN ATTACHMENT

SMCS-1356 **i05495092**

NOTE	REF NO	GRAPHIC REF	PART NUMBER	QTY	PART NAME 1 2 3 4 5 6 (PRODUCT LEVEL)	SEE PAGE
	1	1	**197-8159**	1	SPIDER AS-FAN (7-BLADE)	
	2	1	**261-4773**	1	ADAPTER	
M	3	1	**7X-2539**	4	BOLT (M8X1.25X110-MM)	
	4	1	**8T-4224**	4	WASHER-HARD (8.8X16X2-MM THK)	

M - METRIC PART

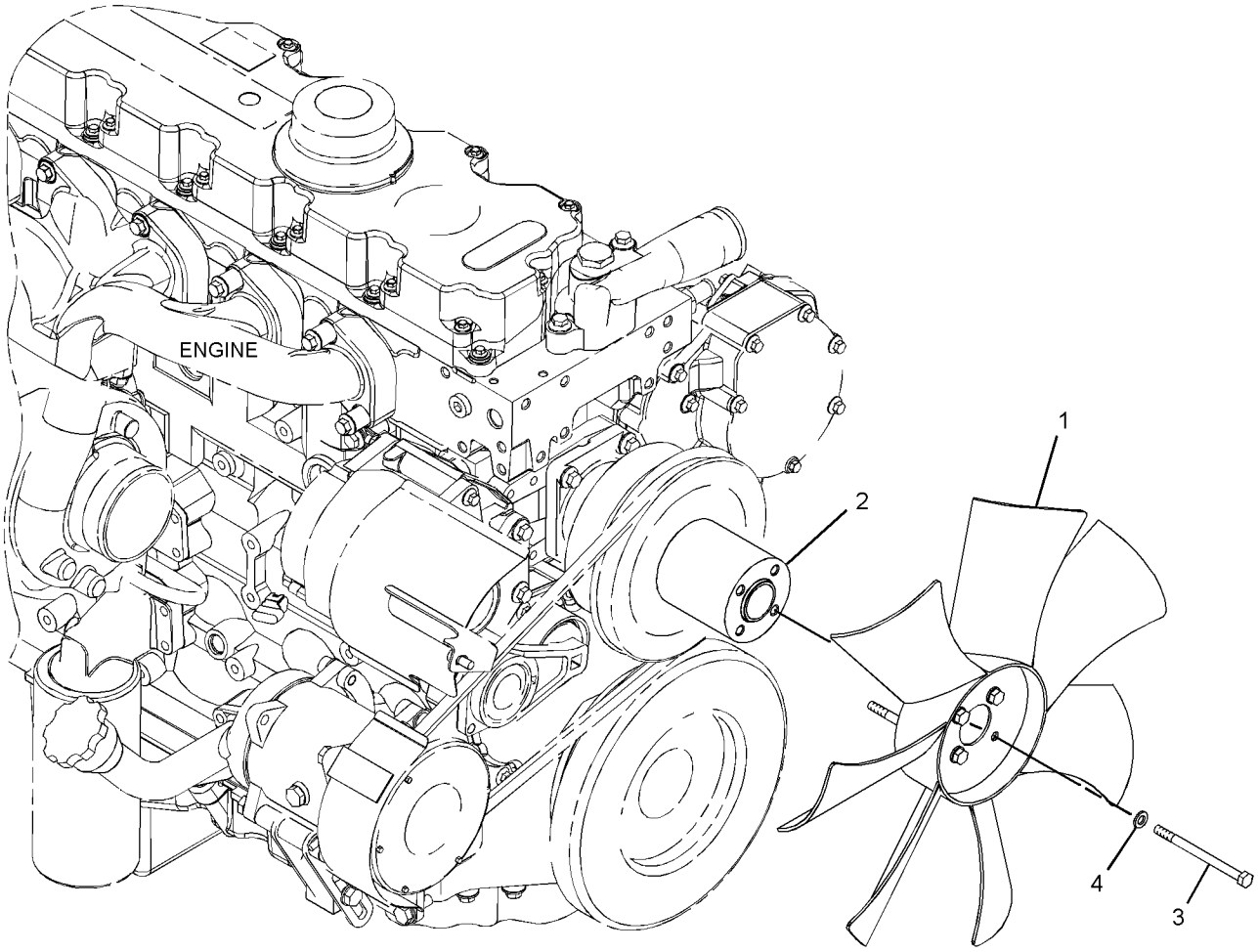

GRAPHIC #1 <END> g01320193

466-9074 FAN GP-SUCTION—AFTERCOOLER

S/N: CH9137-UP
PART OF 454-7364 COOLING AR
ALSO AN ATTACHMENT

SMCS-1356 **i06819130**

NOTE	REF NO	GRAPHIC REF	PART NUMBER	QTY	PART NAME 1 2 3 4 5 6 (PRODUCT LEVEL)	SEE PAGE
	1	1	**197-8159**	1	SPIDER AS-FAN (7-BLADE)	
	2	1	**261-4773**	1	ADAPTER	
	3	1	**343-9677**	1	PULLEY-FAN	
	4	1	**466-9073**	1	SPACER	
M	5	1	**7X-2539**	4	BOLT (M8X1.25X110-MM)	
	6	1	**8T-4224**	4	WASHER-HARD (8.8X16X2-MM THK)	

M - METRIC PART

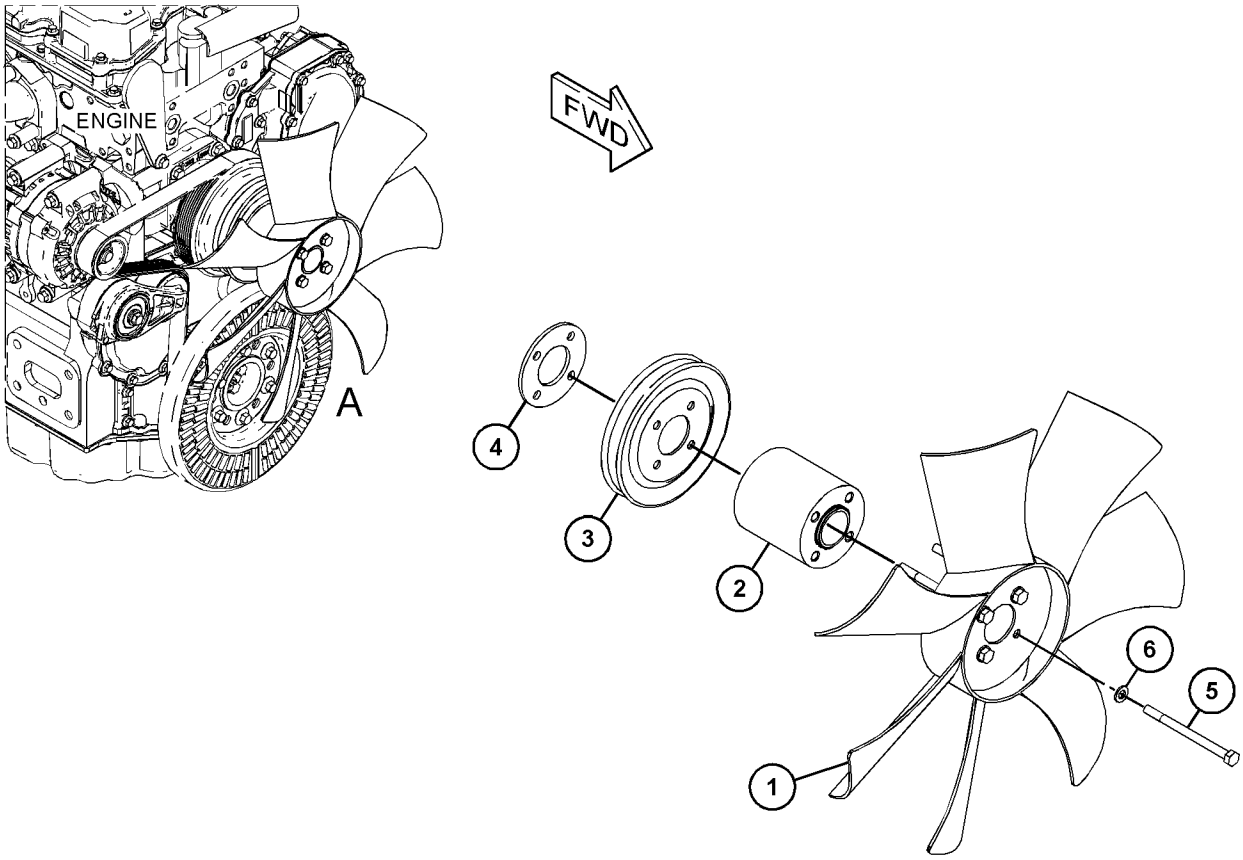

VIEW OF AREA A
(EXPLODED)

GRAPHIC #1 <END> g03873368

253-9837 GUARD GP-FAN—ENGINE COOLANT, HYDRAULIC OIL

S/N: CH91-UP
PART OF 454-7364 COOLING AR
ALSO AN ATTACHMENT

SMCS-1360 **i05495090**

NOTE	REF NO	GRAPHIC REF	PART NUMBER	QTY	PART NAME 1 2 3 4 5 6 (PRODUCT LEVEL)	SEE PAGE
	1	1	**128-1465**	1	SPRING-GAS	
	2	1	**202-5466**	2	BRACKET AS	
	3	1	**239-3798**	2	SPACER	
	4	1	**259-2735**	1	GRILL AS	
	5	1	**262-4729**	1	SHROUD	
	6	1	**4P-7581**	1	CLIP (LADDER)	
	7	1	**4P-8134**	1	CLIP (LADDER)	
	8	1	**5P-4116**	4	WASHER-HARD (8.8X20.5X2-MM THK)	
	9	1	**7X-7729**	10	WASHER (11X25X3-MM THK)	
M	10	1	**8T-4137**	10	BOLT (M10X1.5X20-MM)	
	11	1	**8T-4224**	1	WASHER-HARD (8.8X16X2-MM THK)	
M	12	1	**8T-4908**	4	BOLT (M8X1.25X25-MM)	

M - METRIC PART

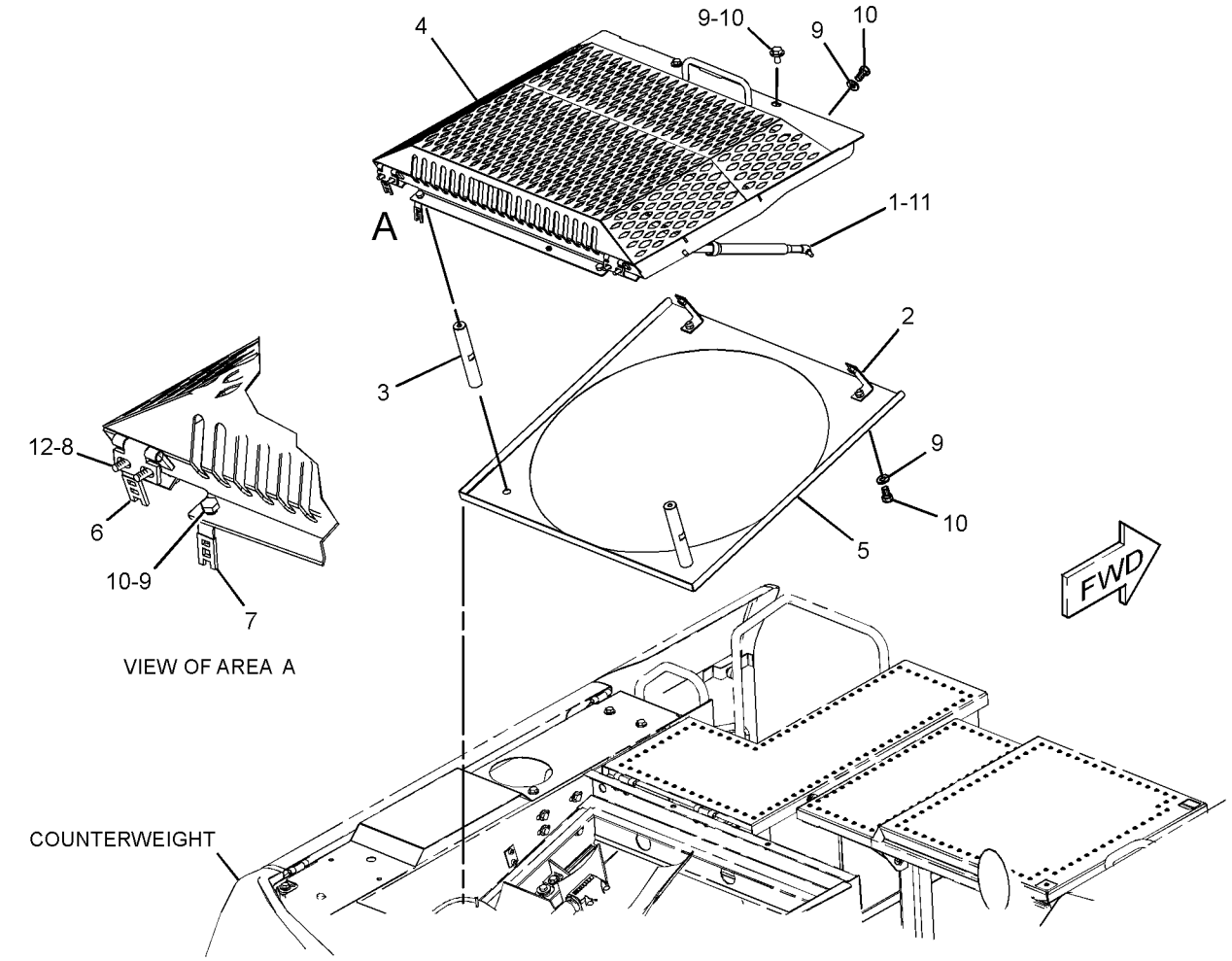

GRAPHIC #1 <END> g01321386

253-9844 GUARD GP-FAN—AFTERCOOLER

S/N: CH91-UP
PART OF 454-7364 COOLING AR
ALSO AN ATTACHMENT

SMCS-1360 **i05558163**

NOTE	REF NO	GRAPHIC REF	PART NUMBER	QTY	PART NAME 1 2 3 4 5 6 (PRODUCT LEVEL)	SEE PAGE
	1	1	**146-6346**	4	CLIP	
	2	1	**258-5137**	1	SHROUD	
	3	1	**261-3529**	1	PLATE AS	
	4	1	**262-2714**	1	PLATE AS	
	5	1	**351-5174**	1	GRILL AS	
	6	1	**7X-7729**	4	WASHER (11X25X3-MM THK)	
M	7	1	**8T-4136**	3	BOLT (M10X1.5X25-MM)	
M	8	1	**8T-4200**	12	BOLT (M8X1.25X16-MM)	
	9	1	**8T-4224**	12	WASHER-HARD (8.8X16X2-MM THK)	
BE	10	1	**262-6678**		SEAL (141-CM)	
E	11	1	**117-0121**		SEAL (30-CM)	
E	11A	1	**117-0121**		SEAL (18-CM)	
E	11B	1	**117-0121**		SEAL (215-CM)	
M	12	1	**8T-4195**	1	BOLT (M10X1.5X30-MM)	
	13	1	**5P-7177**	1	RETAINER	

B - USE AS REQUIRED
E - ORDER BY THE CENTIMETER
M - METRIC PART

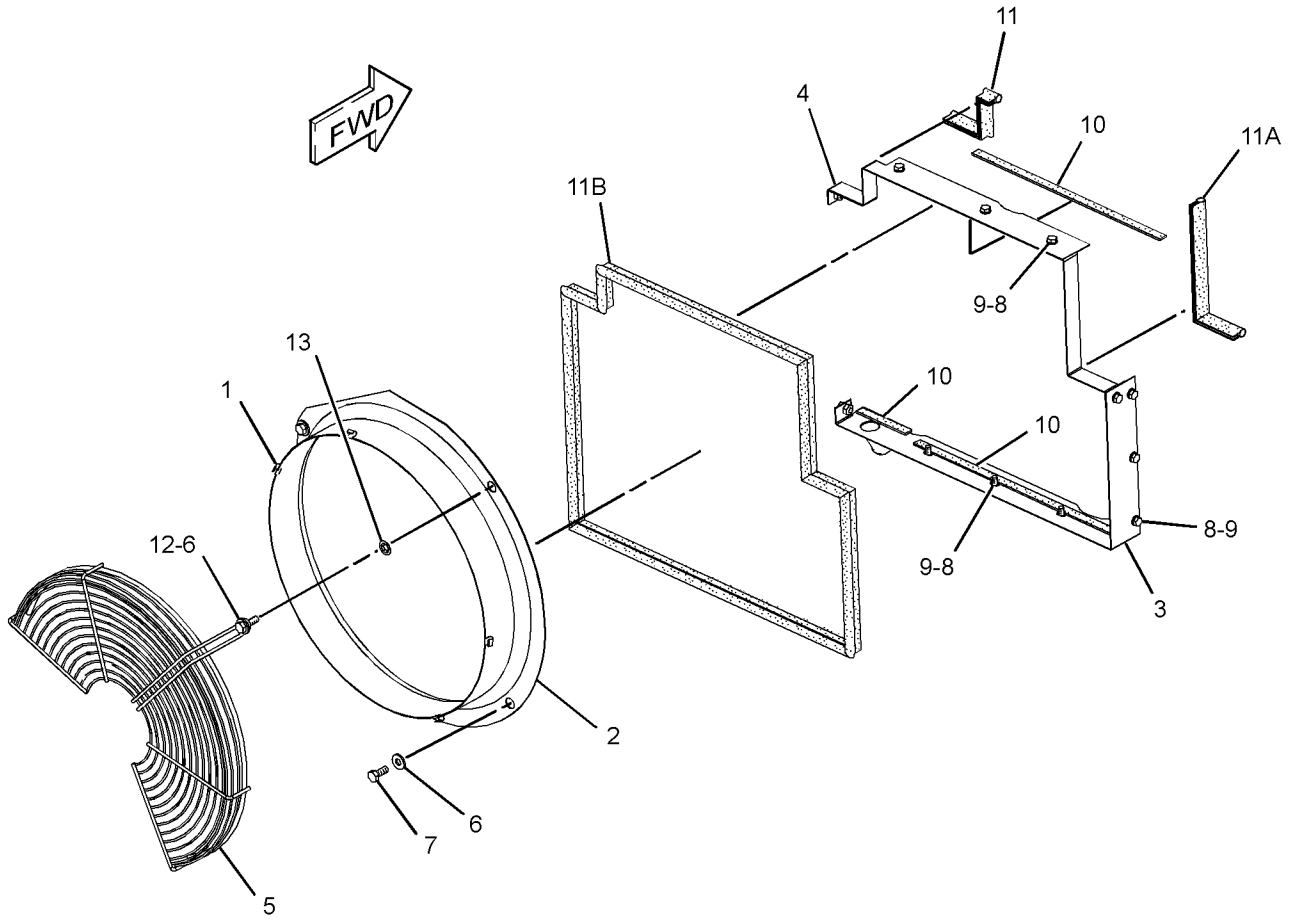

GRAPHIC #1 <END> g02022191

454-7365 LINES GP-COOLANT

S/N: CH91-UP
PART OF 454-7364 COOLING AR
ALSO AN ATTACHMENT

SMCS-1380 **i06617865**

NOTE	REF NO	GRAPHIC REF	PART NUMBER	QTY	PART NAME 1 2 3 4 5 6 (PRODUCT LEVEL)	SEE PAGE
	1	1	**297-7987**	1	ELBOW	
	2	1	**6V-0405**	1	SEAL-BONDED	
	3	1	**8T-7909**	1	ADAPTER	
	4	1	**101-4639**	2	PLUG AS-DRAIN (COOLANT TANK)	
	5	1	**121-5327**	1	GROMMET	
	6	1	*150-3024*	1	ELBOW AS	
		1	**3J-1907**	1	SEAL-O-RING	
		1	**5P-4924**	1	ELBOW	
	7	1	*164-5562*	1	CONNECTOR AS	
		1	**3J-1907**	1	SEAL-O-RING	
		1	**5P-1046**	1	CONNECTOR	
	8	1	**3S-2093**	2	STRAP-CABLE	
	9	1	**267-2477**	1	HOSE	
	10	1	**267-2483**	4	SPACER (10.5X40X15-MM THK)	
	11	1	**279-6422**	1	BRACKET AS	
Y	12	1	*360-4644*	1	TANK GP-COOLANT	66
	13	1	**361-4832**	1	TUBE AS	
	14	1	**361-4833**	1	TUBE AS	
	15	1	**419-6591**	1	HOSE	
	16	1	**419-6592**	1	HOSE	
	17	1	**454-7381**	1	HOSE	
	18	1	**454-7382**	1	HOSE	
	19	1	**104-3173**	1	CLIP (LOOP)	
	20	1	**2M-9780**	2	SEAL-O-RING	
	21	1	**3J-7354**	1	SEAL-O-RING	
M	22	1	**5C-9553**	4	BOLT (M6X1X16-MM)	
	23	1	**5P-4961**	4	CLAMP-HOSE	
	24	1	**7D-7233**	1	CLIP (LOOP)	
	25	1	**7X-7958**	2	CLAMP-HOSE	
	26	1	**8T-4121**	9	WASHER-HARD (11X21X2.5-MM THK)	
M	27	1	**8T-4137**	1	BOLT (M10X1.5X20-MM)	
M	28	1	**8T-4195**	9	BOLT (M10X1.5X30-MM)	
	29	1	**8T-4984**	4	CLAMP-HOSE	
	30	1	**8T-6703**	4	CLAMP-HOSE	
	31	1	**8U-6120**	2	CLAMP	
	32	1	**9X-8256**	4	WASHER (6.6X12X2-MM THK)	
E	33	1	**8C-3681**		HOSE (110-CM)	
G	34	1	**423-1982**		HOSE (65.2-IN)	
G	34A	1	**423-1982**		HOSE (13.6-IN)	

E - ORDER BY THE CENTIMETER
G - ORDER BY THE INCH
M - METRIC PART
Y - SEPARATE ILLUSTRATION

454-7365 **LINES GP-COOLANT** (contd.) **i06617865**

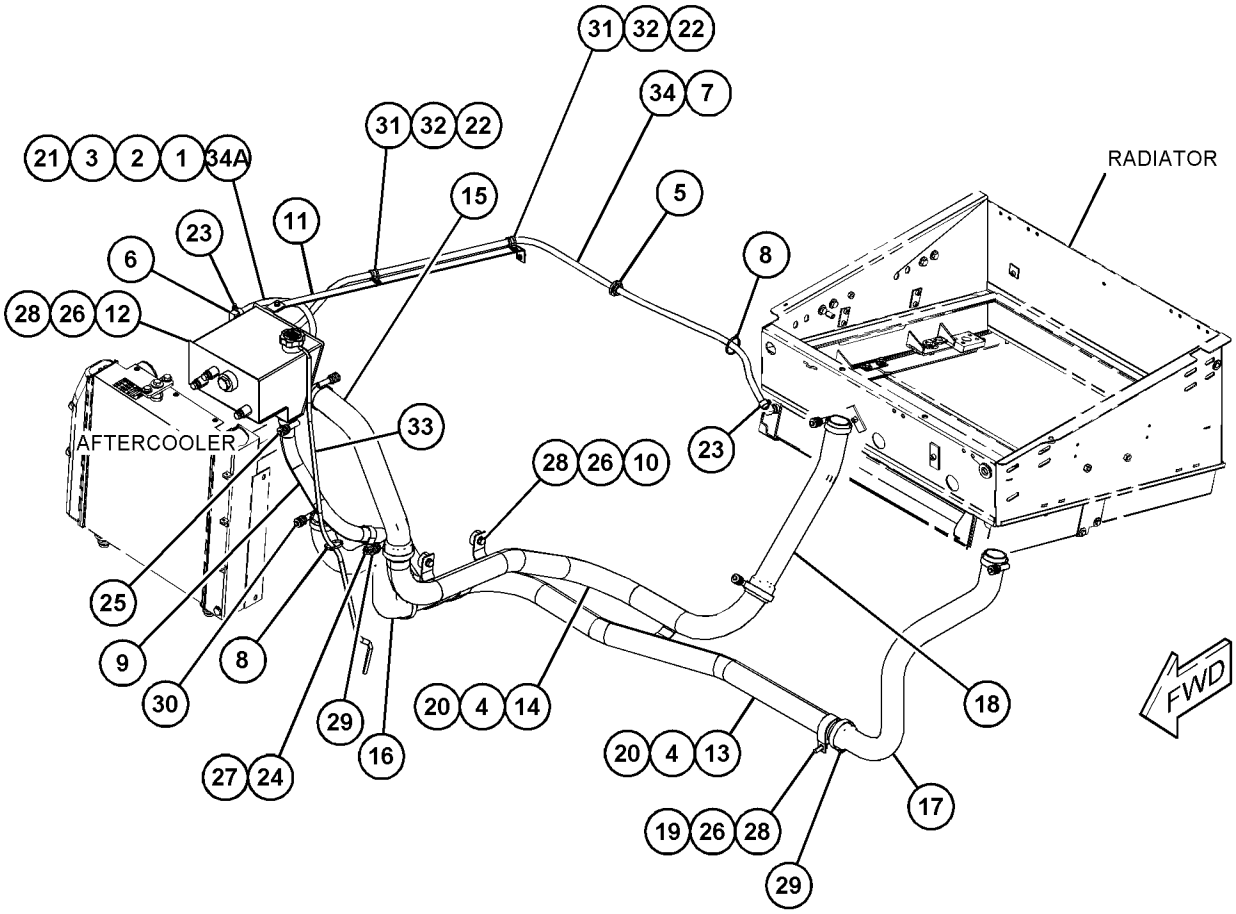

GRAPHIC #1 <END> g06133359

372-2297 PUMP GP-WATER

S/N: E7A1-UP
PART OF 446-6728 ENGINE AR-PRIMARY
ALSO AN ATTACHMENT

SMCS-1361 **i06830085**

NOTE	REF NO	GRAPHIC REF	PART NUMBER	QTY	PART NAME 1 2 3 4 5 6 (PRODUCT LEVEL)	SEE PAGE
M	1	1	**6I-0217**	2	BOLT (M8X1.25X20-MM)	
J	2	1	*485-4894*	1	PUMP GP-WATER	
	2A	1	**278-3242**	3	BOLT-FLANGE HEAD (M8X1.25X18-MM)	
	2B	1	**374-4419**	1	GASKET	
M	3	1	**113-8129**	2	BOLT (M8X1.25X75-MM)	
	4	1	**225-8019**	1	GASKET	
	5	1	**277-2925**	1	CONNECTION AS	
	5A	1	**225-7738**	1	SEAL-O-RING	
	5B	1	**277-2923**	1	GASKET	
M	6	1	**6I-0254**	2	BOLT (M8X1.25X30-MM)	
M	7	1	**6I-0839**	5	BOLT (M8X1.25X70-MM)	
					AVAILABLE REPAIR KIT(S):	
J			**485-4895**	1	PUMP GP-WATER	
					(INCLUDES PUMP GASKET & PUMP GP-WATER)	

J - KIT MARKED J SERVICES PART(S) MARKED J
M - METRIC PART

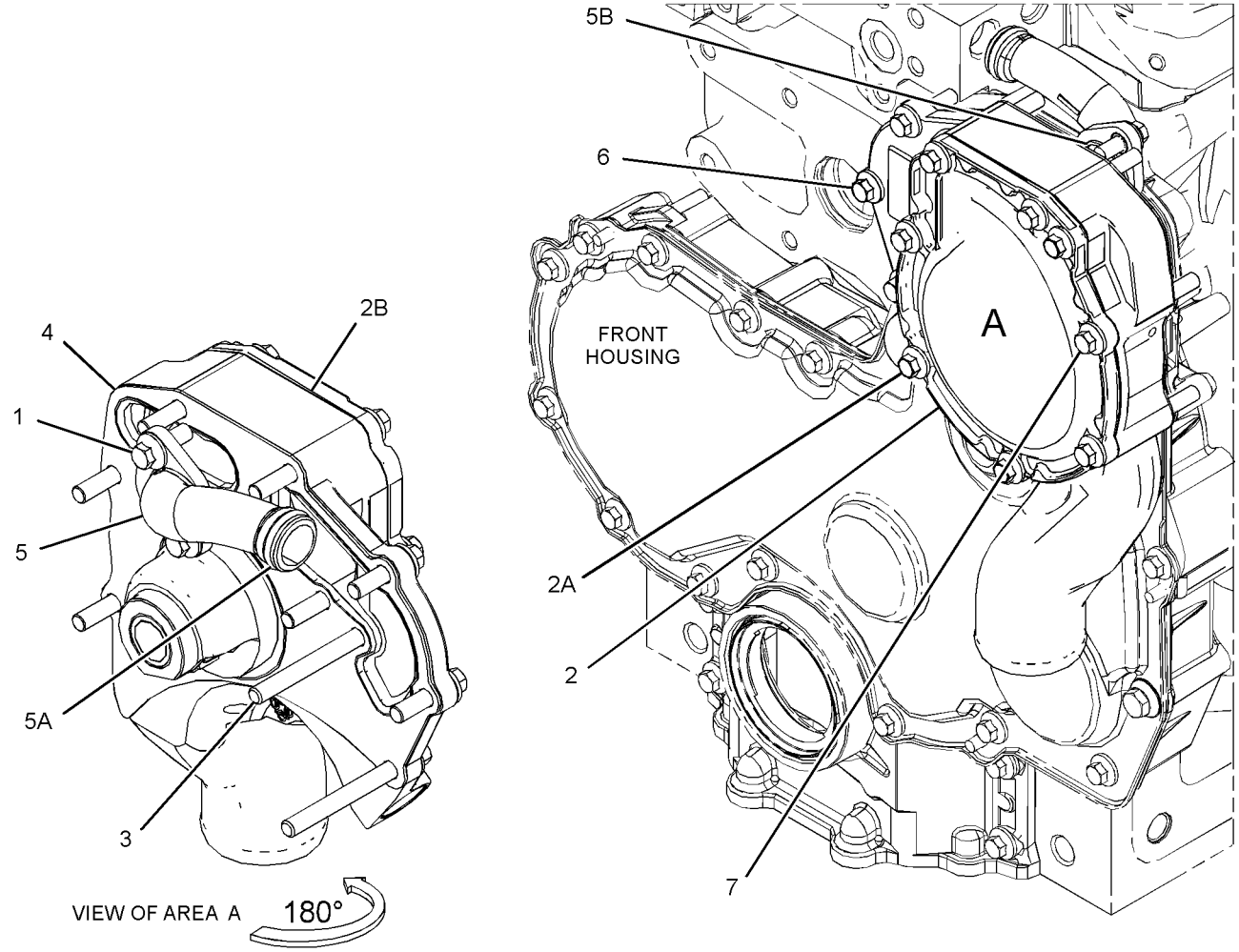

GRAPHIC #1 <END> g06129592

419-6587 RADIATOR & MOUNTING GP

S/N: CH91-UP
PART OF 454-7364 COOLING AR
ALSO AN ATTACHMENT

SMCS-1353 **i05495189**

NOTE	REF NO	GRAPHIC REF	PART NUMBER	QTY	PART NAME 1 2 3 4 5 6 (PRODUCT LEVEL)	SEE PAGE
	1	1	**2W-9710**	4	MOUNT AS	
	2	1	*150-3024*	1	ELBOW AS	
		1	**3J-1907**	1	SEAL-O-RING	
		1	**5P-4924**	1	ELBOW	
	3	1	**258-5131**	2	PLATE	
	4	1	**261-0698**	4	PLATE	
	5	1	**261-2992**	8	WASHER (10.3X32X3.5-MM THK)	
	6	1	**340-3236**	2	WASHER	
	7	1	**392-2630**	1	SUPPORT AS	
M		1	**8T-3490**	5	NUT-WELD (M10X1.5-THD)	
		1	**127-9580**	1	ROD	
M		1	**159-9540**	5	NUT-WELD (M8X1.25-THD)	
	8	1	**419-6590**	1	RADIATOR & HYD OIL COOLER AS	
	9	1	**2D-0388**	1	GROMMET (25.4-MM ID)	
	10	1	**7X-7729**	16	WASHER (11X25X3-MM THK)	
M	11	1	**8T-4137**	12	BOLT (M10X1.5X20-MM)	
M	12	1	**8T-4191**	4	BOLT (M10X1.5X16-MM)	
M	13	1	**8T-4196**	4	BOLT (M10X1.5X35-MM)	
	14	1	**9D-3768**	1	GROMMET	
E	15	1	**128-1423**		SEAL (9-CM)	
E	16	1	**117-0121**		SEAL (84-CM EACH)	
E	17	1	**201-8780**		SEAL (73-CM EACH)	
E	17A	1	**201-8780**		SEAL (75-CM EACH)	
E	17B	1	**201-8780**		SEAL (84-CM EACH)	

E - ORDER BY THE CENTIMETER
M - METRIC PART

419-6587 **RADIATOR & MOUNTING GP** (contd.) **i05495189**

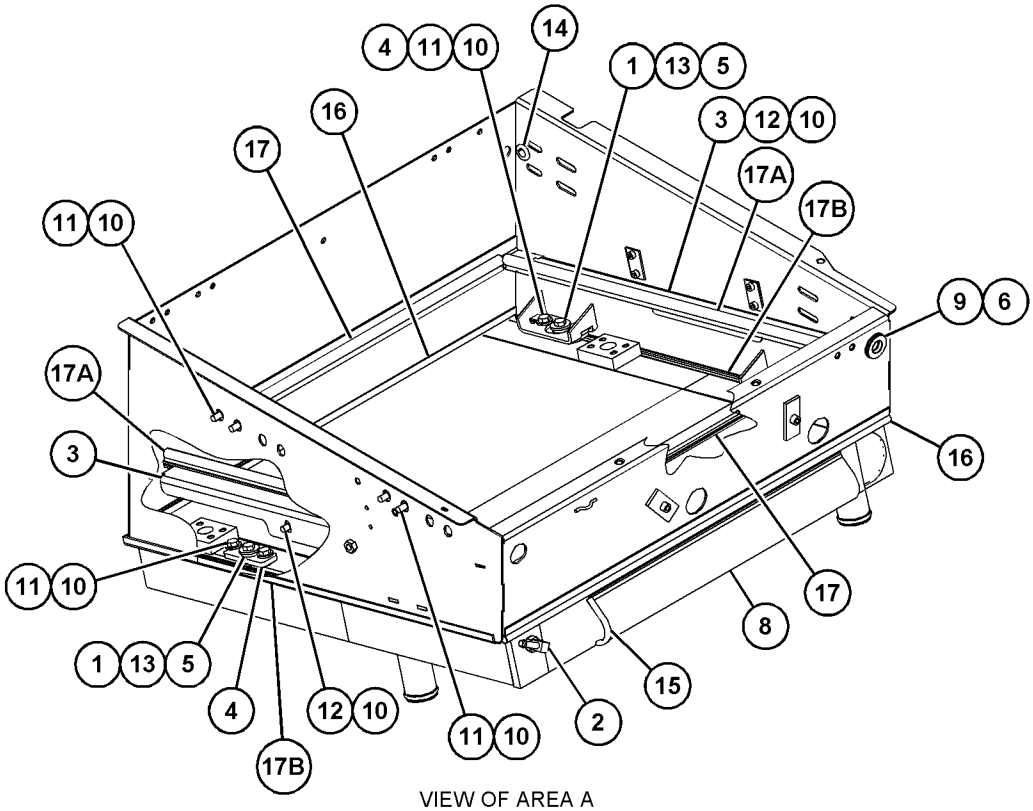

VIEW OF AREA A

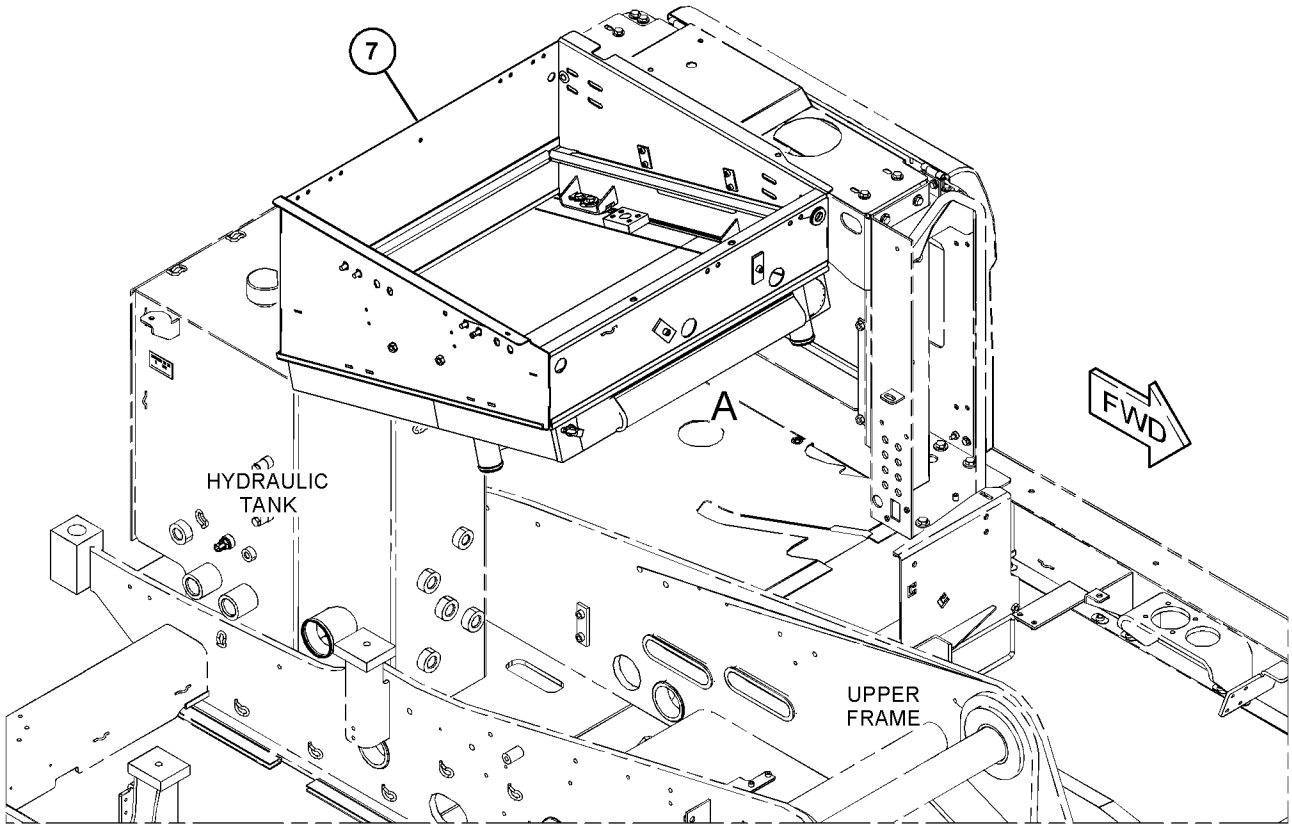

GRAPHIC #1 <END> g03480466

360-4644 TANK GP-COOLANT

S/N: CH91-UP
PART OF 454-7365 LINES GP-COOLANT
ALSO AN ATTACHMENT

SMCS-1354, 1377 **i05496712**

NOTE	REF NO	GRAPHIC REF	PART NUMBER	QTY	PART NAME 1 2 3 4 5 6 (PRODUCT LEVEL)	SEE PAGE
	1	1	**4E-0041**	1	GAUGE (SIGHT GLASS) (COOLANT TANK)	
	2	1	**345-1237**	1	CAP AS-COOLANT TANK	
	3	1	**360-4645**	1	TANK AS	
	4	1	**3D-2824**	1	SEAL-O-RING	

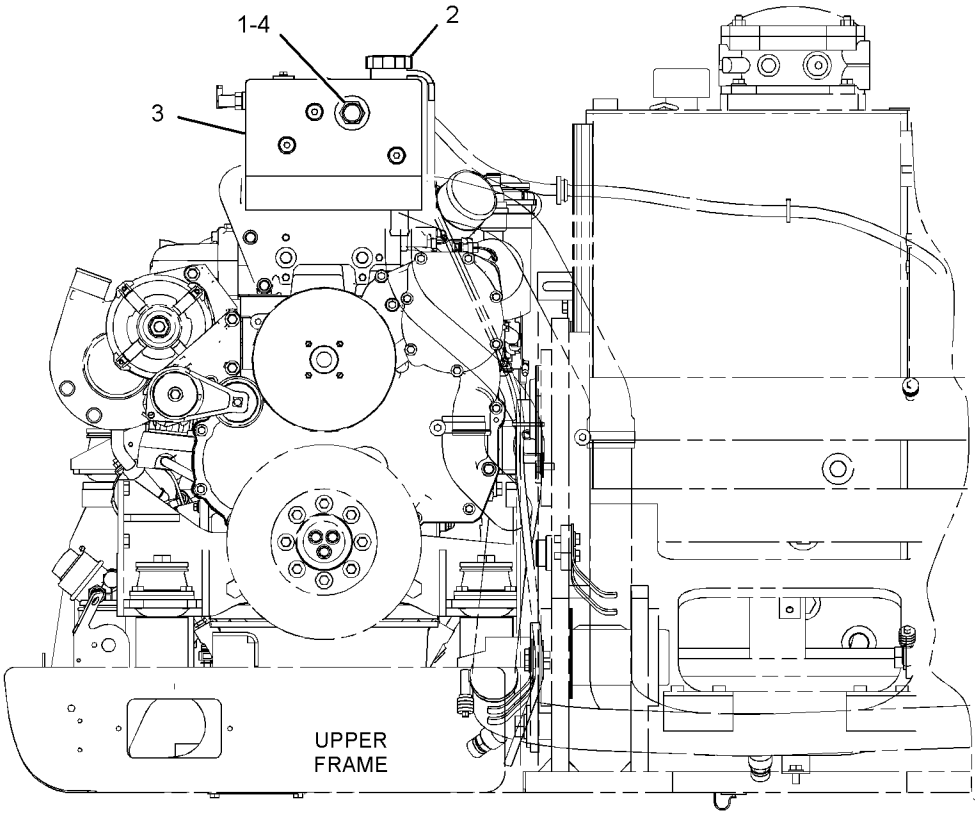

FRONT VIEW

GRAPHIC #1 <END> g02417576

419-6583 AFTERCOOLER GP-AIR

S/N: CH91-UP
PART OF 454-7364 COOLING AR
ALSO AN ATTACHMENT

SMCS-1063 **i05495169**

NOTE	REF NO	GRAPHIC REF	PART NUMBER	QTY	PART NAME 1 2 3 4 5 6 (PRODUCT LEVEL)	SEE PAGE
	1	1	**2W-9710**	3	MOUNT AS	
	2	1	**254-7550**	2	BRACKET	
	3	1	**261-0698**	1	PLATE	
	4	1	**419-6584**	1	AFTERCOOLER GP-AIR	
	5	1	**261-2992**	6	WASHER (10.3X32X3.5-MM THK)	
	6	1	**7X-7729**	2	WASHER (11X25X3-MM THK)	
	7	1	**8T-4121**	4	WASHER-HARD (11X21X2.5-MM THK)	
M	8	1	**8T-4191**	2	BOLT (M10X1.5X16-MM)	
M	9	1	**8T-4195**	4	BOLT (M10X1.5X30-MM)	
M	10	1	**8T-4196**	3	BOLT (M10X1.5X35-MM)	

M - METRIC PART

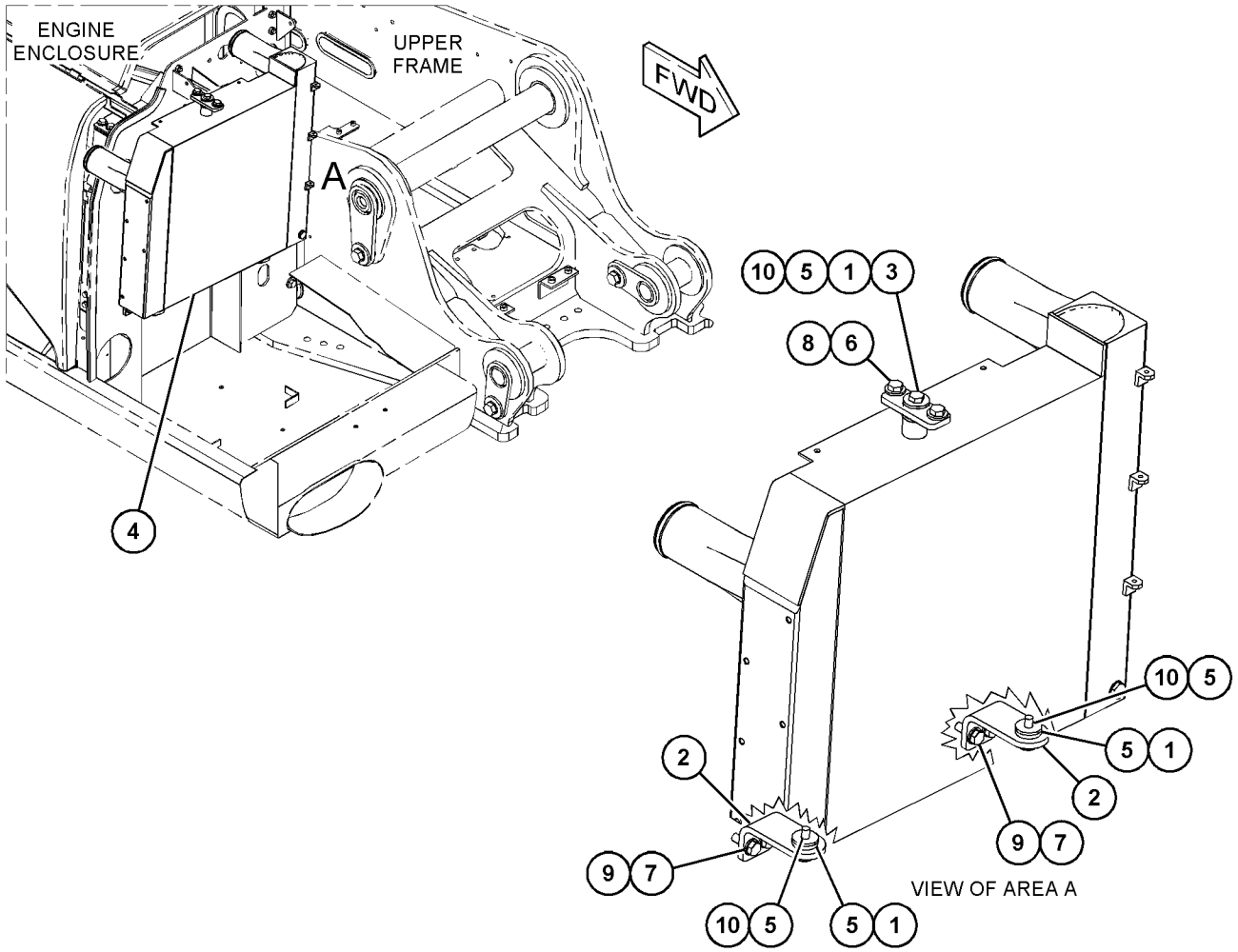

GRAPHIC #1 <END> g03480172

240-8552 AIR CLEANER GP

S/N: CH91-UP
PART OF 253-9845 AIR CLEANER GP
ALSO AN ATTACHMENT

SMCS-1051, 1054 **i05495265**

NOTE	REF NO	GRAPHIC REF	PART NUMBER	QTY	PART NAME 1 2 3 4 5 6 (PRODUCT LEVEL)	SEE PAGE
M	1	1	**244-1432**	1	BOLT-TEE (M10X1X80.8-MM)	
	2	1	**252-5001**	1	FILTER ELEMENT AS-AIR (PRIMARY)	
	3	1	**252-5002**	1	FILTER ELEMENT AS-AIR (SECONDARY)	
	4	1	**252-5003**	1	FRAME (AIR CLEANER ELEMENT)	
	5	1	**252-5004**	1	COVER	

M - METRIC PART

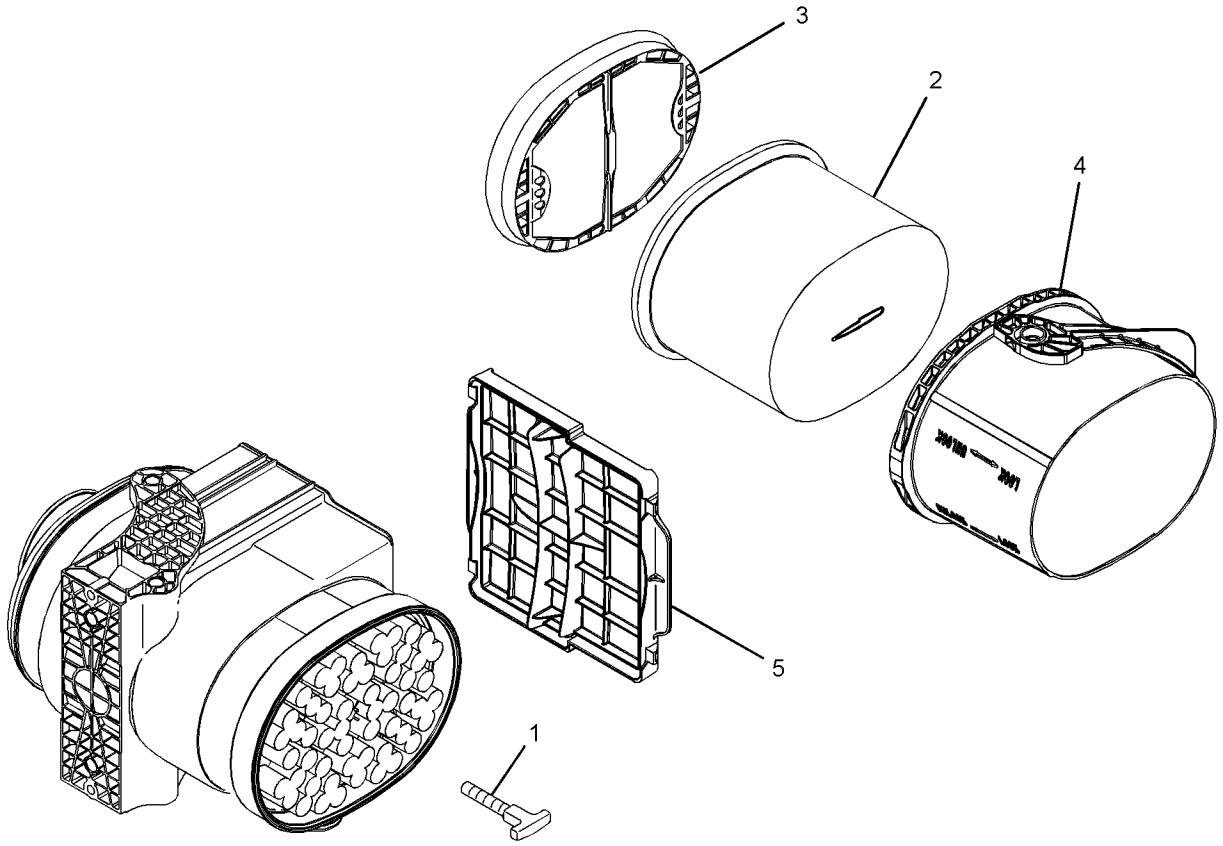

GRAPHIC #1 <END> g01191292

253-9845 AIR CLEANER GP

S/N: CH91-UP
PART OF 354-7270 INSTALLATION AR
ALSO AN ATTACHMENT

SMCS-1051, 1054 **i05495261**

NOTE	REF NO	GRAPHIC REF	PART NUMBER	QTY	PART NAME 1 2 3 4 5 6 (PRODUCT LEVEL)	SEE PAGE
	1	1	**7X-7958**	1	CLAMP-HOSE	
	2	1	**8T-6703**	1	CLAMP-HOSE	
Y	3	1	*240-8552*	1	AIR CLEANER GP	68
	4	1	**254-7873**	1	SWITCH-PRESSURE (INLET AIR RESTRICTION)	
	5	1	**260-3526**	1	HOSE AS	
	6	1	**260-3530**	1	HOSE	
M	7	1	**8T-4189**	3	BOLT (M8X1.25X20-MM)	
	8	1	**8T-4224**	3	WASHER-HARD (8.8X16X2-MM THK)	
	9	1	**8T-4987**	1	CLAMP-HOSE	

M - METRIC PART
Y - SEPARATE ILLUSTRATION

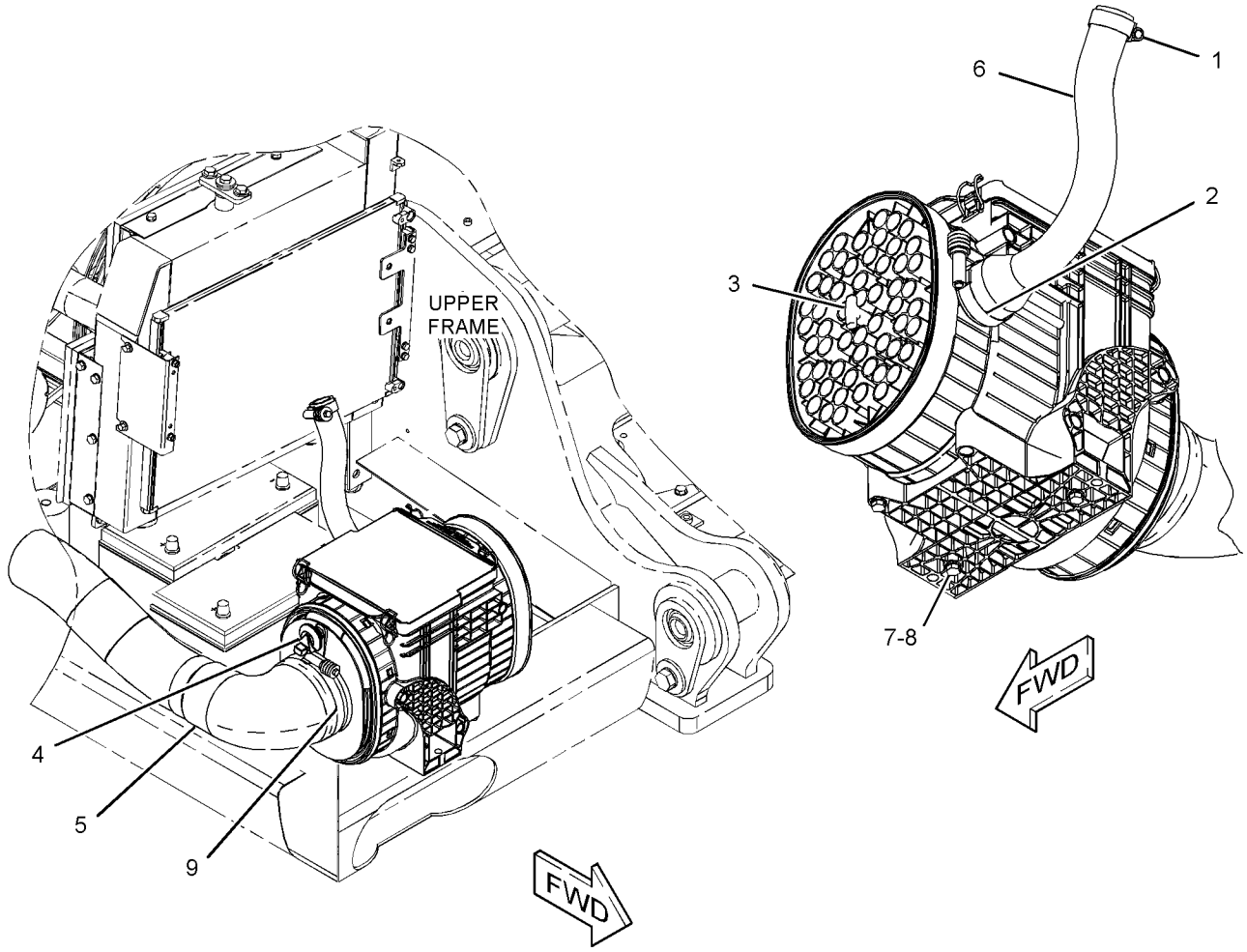

GRAPHIC #1 <END> g03216853

253-9846 LINES GP-AIR

S/N: CH91-UP
PART OF 354-7270 INSTALLATION AR
ALSO AN ATTACHMENT

SMCS-1071 **i05970845**

NOTE	REF NO	GRAPHIC REF	PART NUMBER	QTY	PART NAME 1 2 3 4 5 6 (PRODUCT LEVEL)	SEE PAGE
	1	1	**8T-6703**	1	CLAMP-HOSE	
	2	1	**260-3527**	1	HOSE-AIR	
	3	1	**260-3531**	1	TUBE AS	
	4	1	**260-3540**	1	HOSE-AIR	
	5	1	**275-4945**	1	HOSE	
M	6	1	**099-3649**	2	BOLT (M8X1.25X40-MM)	
	7	1	**144-0367**	3	CLAMP-HOSE	
M	8	1	**5C-7261**	2	NUT (M8X1.25-THD)	
	9	1	**8T-4224**	2	WASHER-HARD (8.8X16X2-MM THK)	
	10	1	**9X-2201**	3	CLAMP-HOSE	

M - METRIC PART

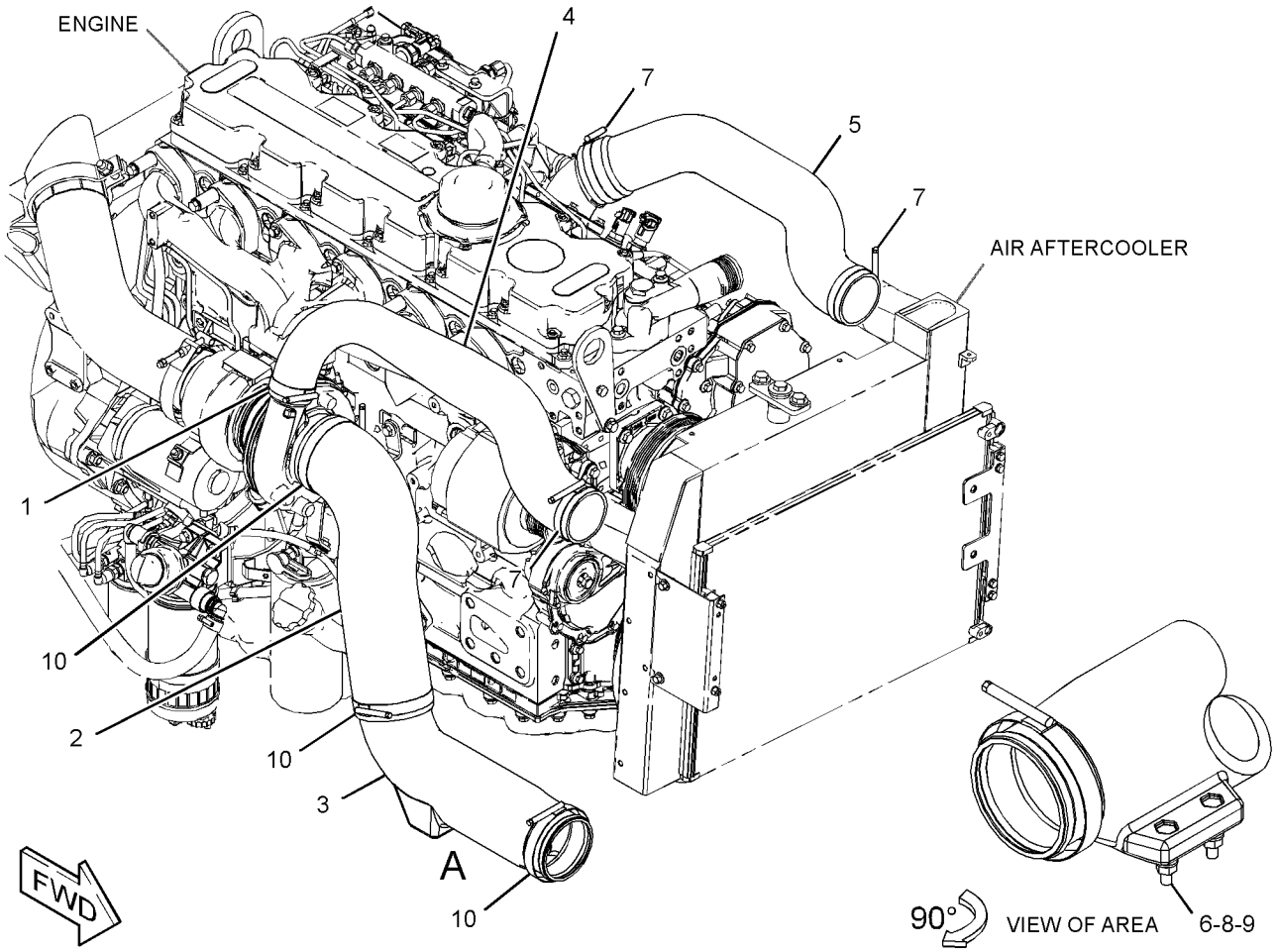

GRAPHIC #1 <END> g03213547

377-2877 LINES GP-TURBOCHARGER AIR

S/N: E7A1-UP
PART OF 380-2039 TURBOCHARGER GP
ALSO AN ATTACHMENT

SMCS-1052, 1071 **i05495860**

NOTE	REF NO	GRAPHIC REF	PART NUMBER	QTY	PART NAME 1 2 3 4 5 6 (PRODUCT LEVEL)	SEE PAGE
	1	1	**225-8526**	2	WASHER (10.4X13.75X1.37-MM THK)	
	2	1	**133-9469**	1	CLIP	
	3	1	**225-8524**	1	BOLT-SPECIAL	
	4	1	**335-8611**	2	CLIP	
	5	1	**377-2876**	1	TUBE AS	
	6	1	**422-7715**	1	HOSE-TURBOCHARGER	
	7	1	**107-2348**	2	CLIP	

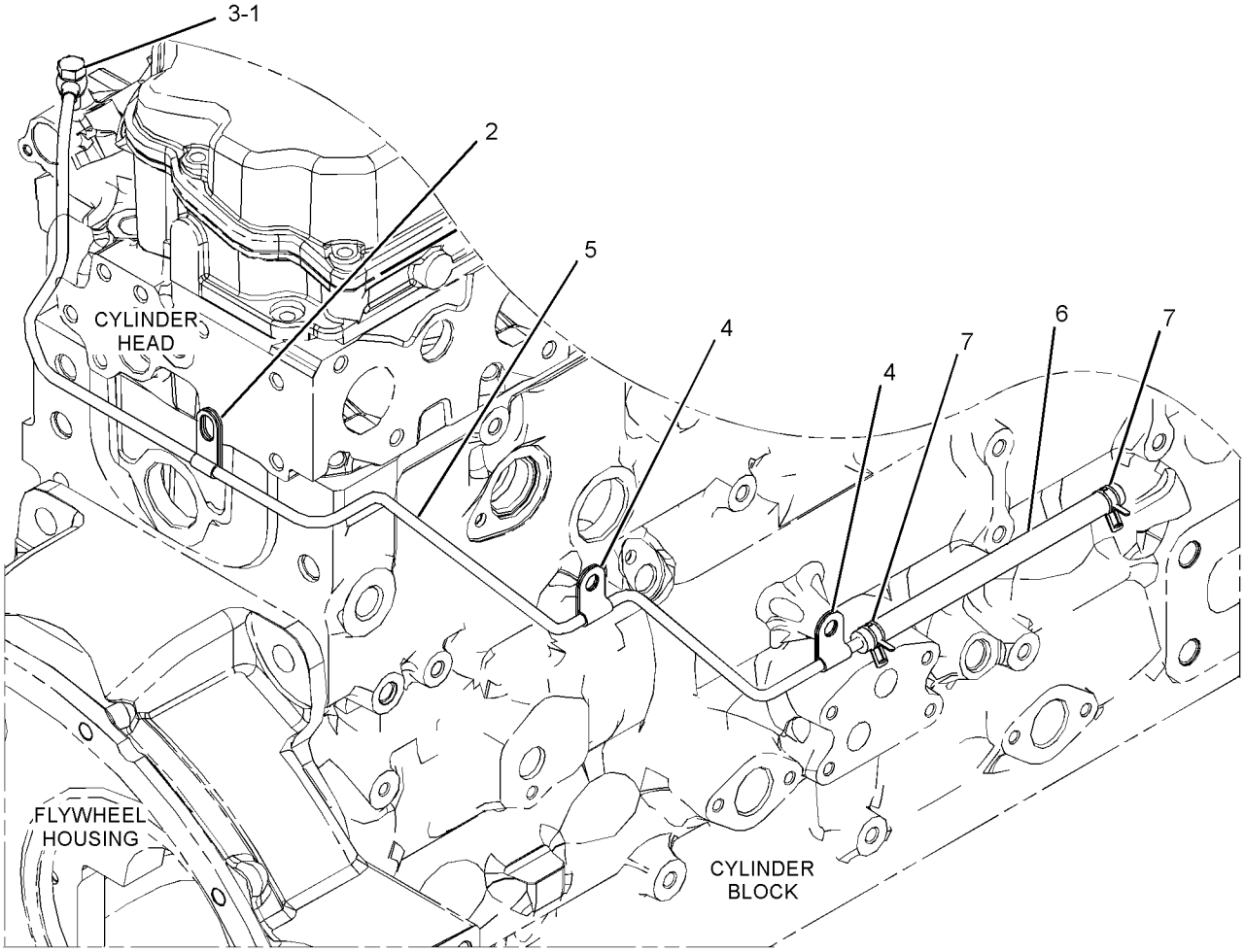

GRAPHIC #1 <END> g03380817

393-7694 MANIFOLD GP-EXHAUST

S/N: E7A1-UP
PART OF 446-6728 ENGINE AR-PRIMARY
ALSO AN ATTACHMENT

SMCS-1059 **i05499035**

NOTE	REF NO	GRAPHIC REF	PART NUMBER	QTY	PART NAME 1 2 3 4 5 6 (PRODUCT LEVEL)	SEE PAGE
	1	1	**238-8292**	12	BOLT-FLANGE HEAD	
	2	1	**286-7851**	12	SPACER	
	3	1	**367-3340**	4	STUD	
	4	1	**384-2286**	1	MANIFOLD	
	5	1	**416-7727**	2	GASKET	

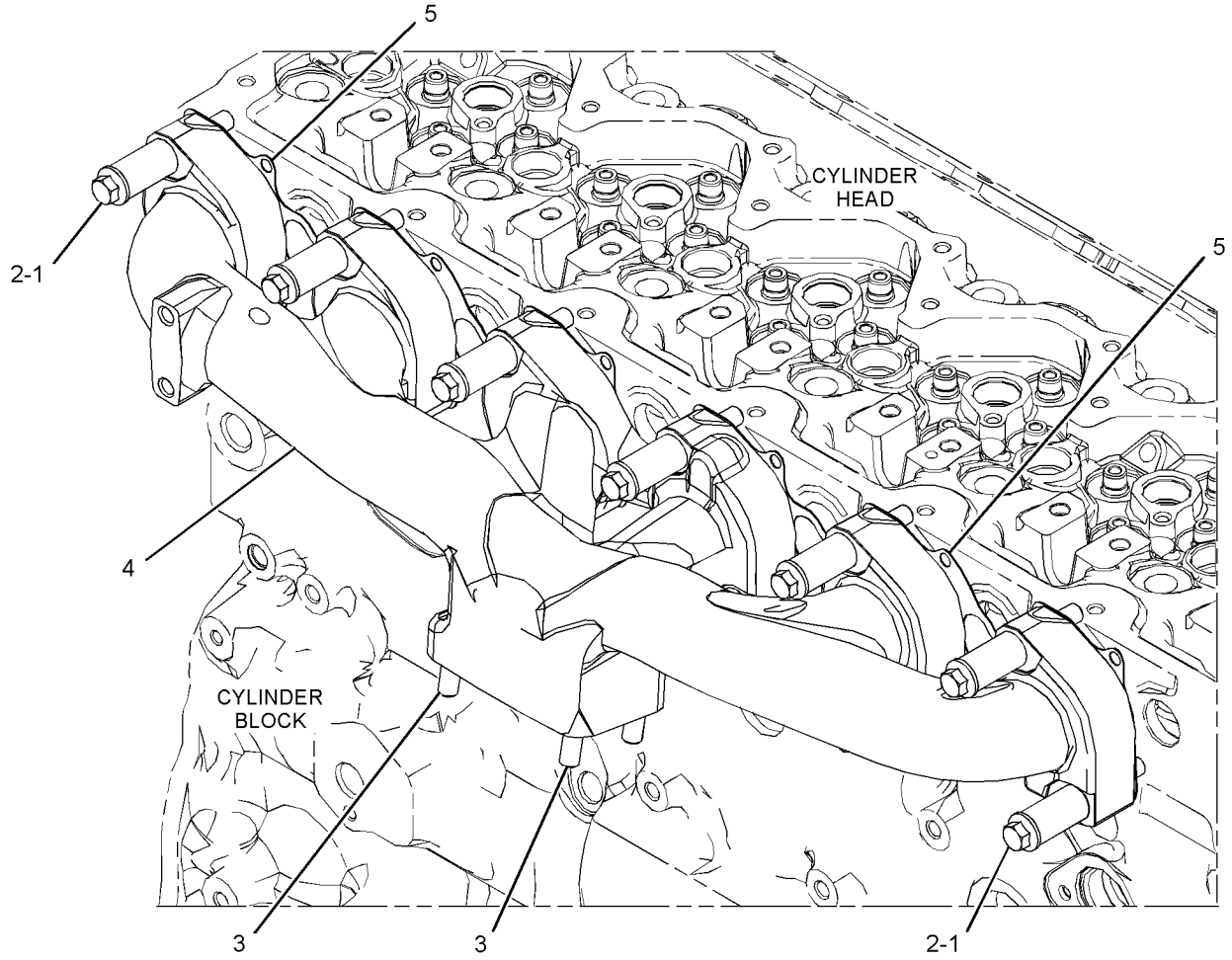

GRAPHIC #1 <END> g03379009

378-8582 MANIFOLD GP-INLET

S/N: E7A1-UP
PART OF 446-6728 ENGINE AR-PRIMARY
ALSO AN ATTACHMENT

SMCS-1058, 1090 **i06861637**

NOTE	REF NO	GRAPHIC REF	PART NUMBER	QTY	PART NAME 1 2 3 4 5 6 (PRODUCT LEVEL)	SEE PAGE
M	1	1	**6I-0917**	2	BOLT (M6X1X25-MM)	
M	2	1	**105-2740**	12	BOLT (M8X1.25X40-MM)	
	3	1	**369-1658**	1	SOLENOID	
	4	1	**452-9704**	1	COVER (CYLINDER HEAD)	
M	5	1	**6I-0260**	4	BOLT (M8X1.25X25-MM)	
	6	1	**390-7626**	1	CONNECTION GP-AIR	
	6A	1	**238-8288**	1	GASKET-INLET	
	6B	1	**292-3462**	1	PLUG-PIPE	

M - METRIC PART

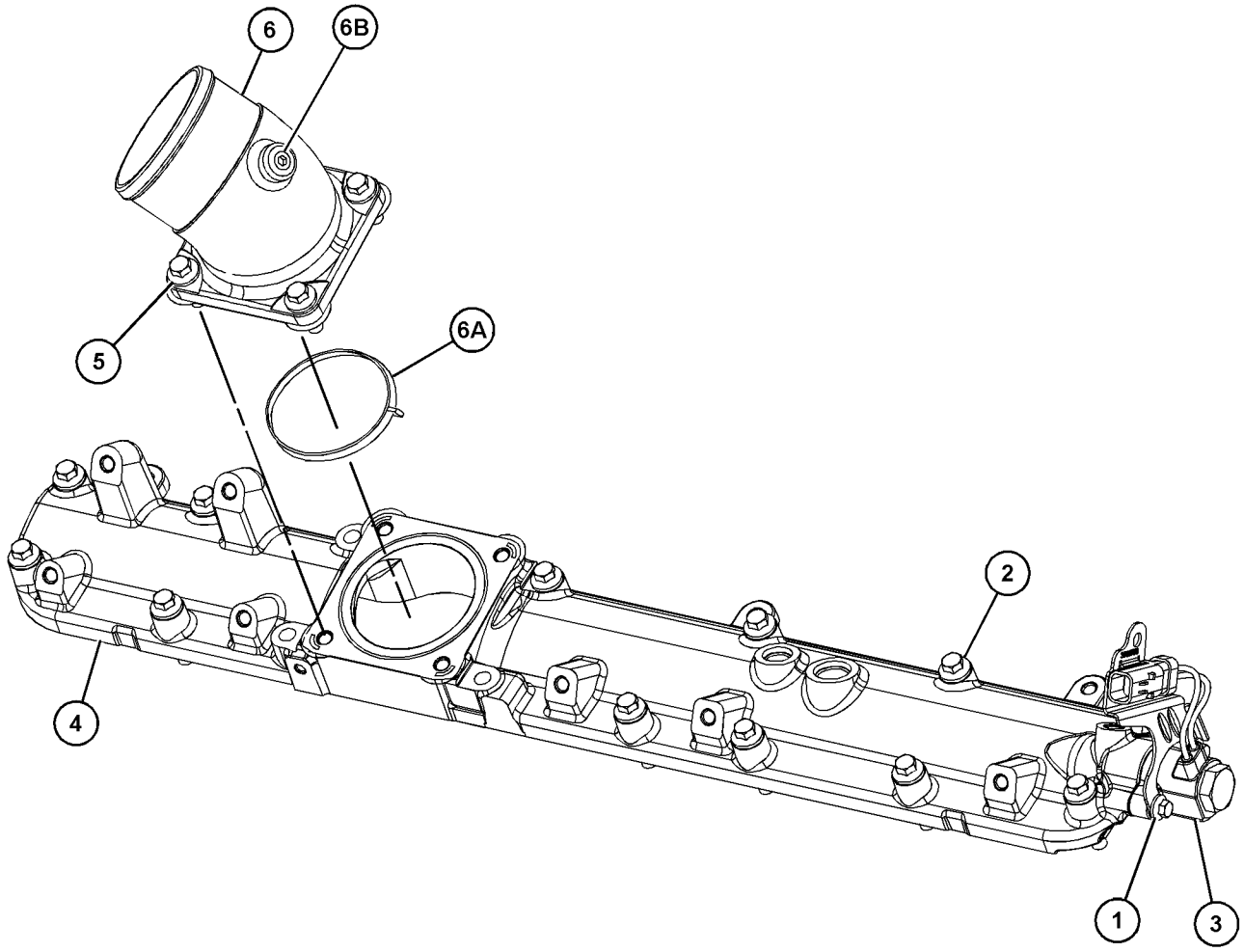

GRAPHIC #1 <END> g03651405

478-6537 MUFFLER GP

S/N: CH91-UP
PART OF 482-4529 ENGINE AR
ALSO AN ATTACHMENT

SMCS-1062 **i06671926**

NOTE	REF NO	GRAPHIC REF	PART NUMBER	QTY	PART NAME 1 2 3 4 5 6 (PRODUCT LEVEL)	SEE PAGE
	1	1	**4F-4974**	2	CLAMP	
	2	1	**260-3534**	1	MUFFLER	
	3	1	**262-6686**	1	SHIELD AS	
M		1	**159-3042**	1	NUT-WELD (M10X1.5-THD)	
	4	1	**265-7964**	2	U-BOLT	
	5	1	**455-0466**	1	TUBE-EXHAUST	
	6	1	**306-8030**	1	BRACKET AS	
	7	1	**478-6538**	1	TUBE	
	8	1	**8T-4121**	4	WASHER-HARD (11X21X2.5-MM THK)	
M	9	1	**8T-4133**	10	NUT (M10X1.5-THD)	
M	10	1	**8T-4137**	5	BOLT (M10X1.5X20-MM)	
M	11	1	**8T-4185**	2	BOLT (M10X1.5X50-MM)	
	12	1	**7X-7729**	5	WASHER (11X25X3-MM THK)	

M - METRIC PART

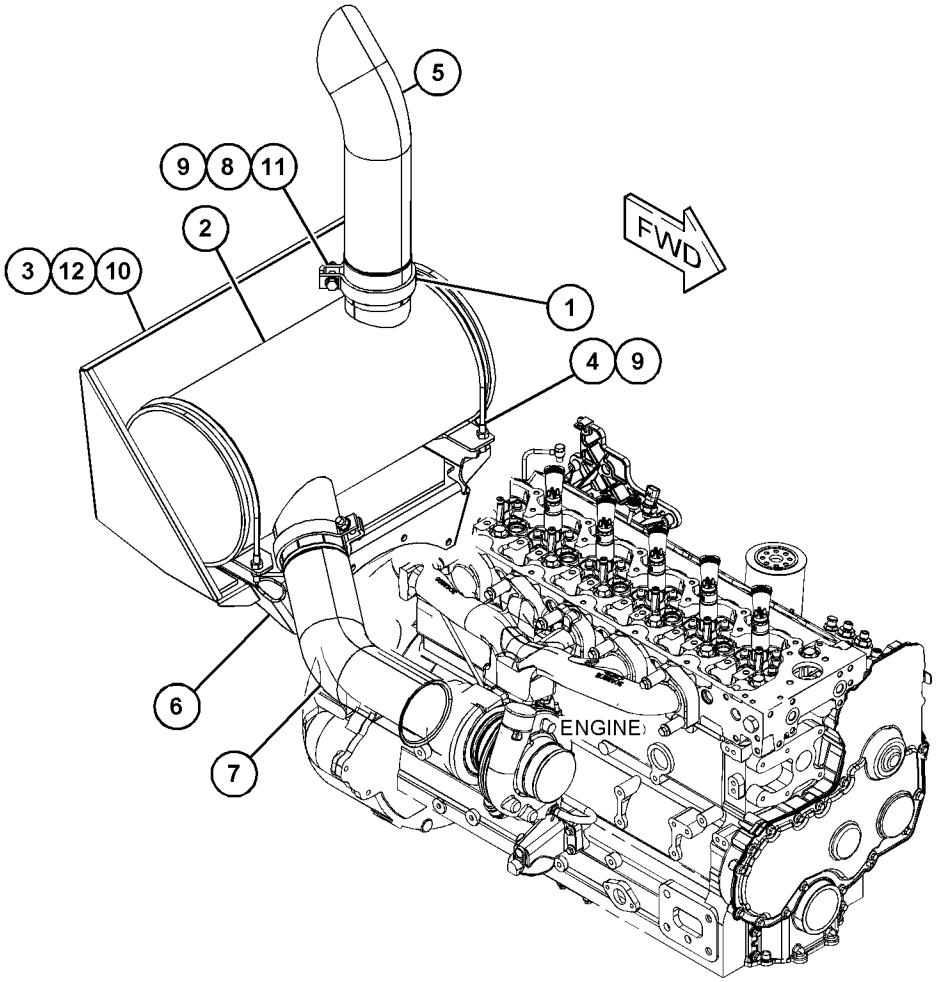

GRAPHIC #1 <END> g06084884

380-2039 TURBOCHARGER GP

S/N: E7A1-UP
PART OF 446-6728 ENGINE AR-PRIMARY
ALSO AN ATTACHMENT
TYPE 1

SMCS-1052, 1053 **i05938683**

NOTE	REF NO	GRAPHIC REF	PART NUMBER	QTY	PART NAME 1 2 3 4 5 6 (PRODUCT LEVEL)	SEE PAGE
M	1	1	**6I-0217**	5	BOLT (M8X1.25X20-MM)	
M	2	1	**6I-0563**	4	NUT (M10X1.5-THD)	
M	3	1	**100-4830**	1	BOLT (M10X1.5X20-MM)	
M	4	1	**124-3815**	2	BOLT (M8X1.25X16-MM)	
	5	1	**278-0017**	1	GASKET	
R	6	1	**315-9810**	1	TURBOCHARGER GP	
	6A	1	**277-9602**	1	CLAMP	
	6B	1	**277-9603**	1	CLAMP	
Y	7	1	**368-8559**	1	LINES GP-TURBOCHARGER OIL	45
Y	8	1	**377-2877**	1	LINES GP-TURBOCHARGER AIR	71
	9	1	**420-2371**	1	LINE AS (TURBOCHARGER AIR)	
	10	1	**437-4170**	1	GASKET	

M - METRIC PART
R - REMANUFACTURED PART MAY BE AVAILABLE
Y - SEPARATE ILLUSTRATION

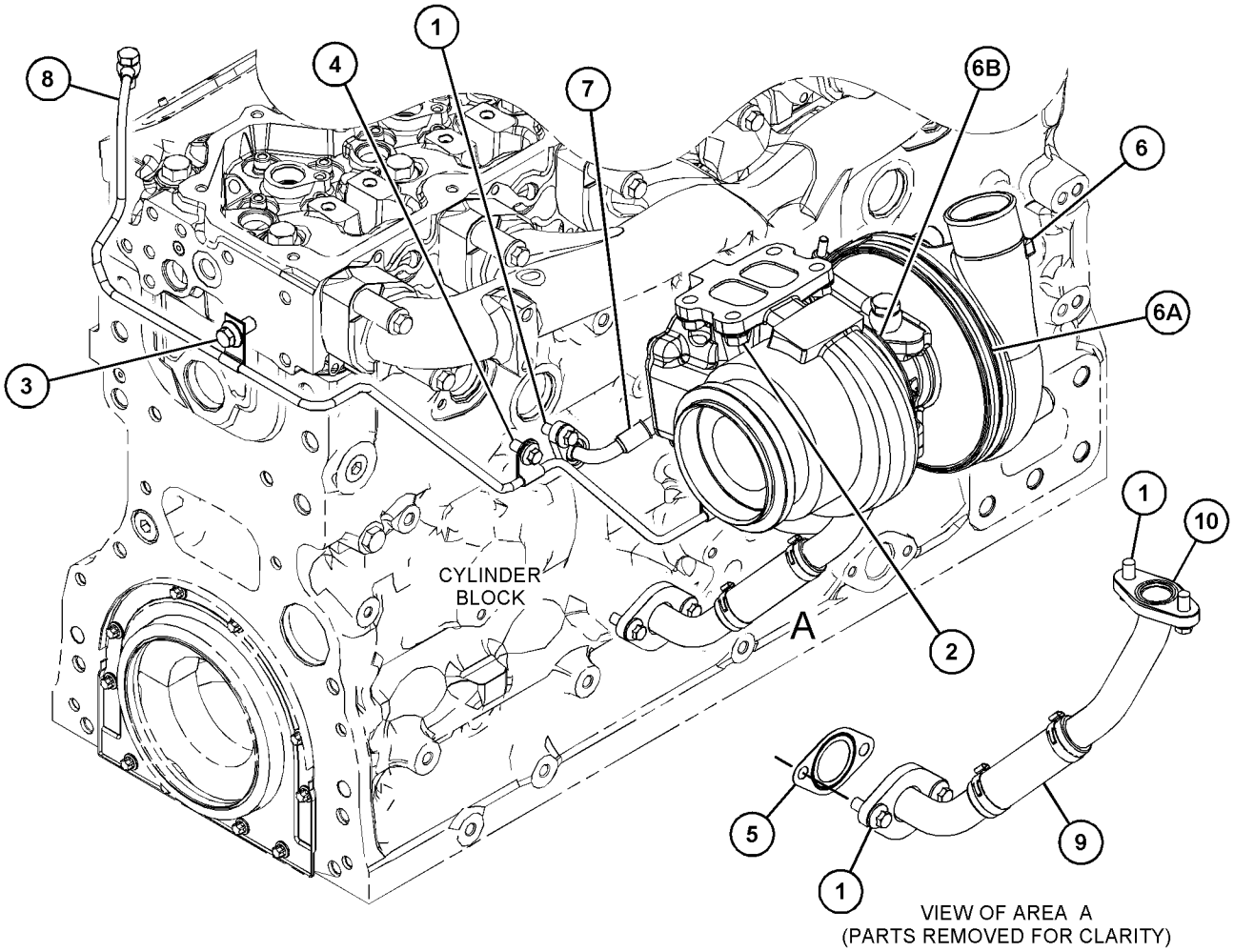

GRAPHIC #1 <END> g03731309

380-2039 TURBOCHARGER GP

S/N: E7A1-UP
PART OF 446-6728 ENGINE AR-PRIMARY
ALSO AN ATTACHMENT
TYPE 2

SMCS-1052, 1053 **i07449974**

NOTE	REF NO	GRAPHIC REF	PART NUMBER	QTY	PART NAME 1 2 3 4 5 6 (PRODUCT LEVEL)	SEE PAGE
M	1	1	**6I-0217**	5	BOLT (M8X1.25X20-MM)	
M	2	1	**6I-0563**	4	NUT (M10X1.5-THD)	
M	3	1	**100-4830**	1	BOLT (M10X1.5X20-MM)	
M	4	1	**124-3815**	2	BOLT (M8X1.25X16-MM)	
	5	1	**278-0017**	1	GASKET	
C	6	1	**458-8357**	1	TURBOCHARGER AS	
		1	**560-7640**	1	KIT-AIR ACTUATOR	
Y	7	1	**368-8559**	1	LINES GP-TURBOCHARGER OIL	45
Y	8	1	**377-2877**	1	LINES GP-TURBOCHARGER AIR	71
	9	1	**420-2371**	1	LINE AS (TURBOCHARGER OIL DRAIN)	
	10	1	**437-4170**	1	GASKET	

C - CHANGE FROM PREVIOUS TYPE
M - METRIC PART
Y - SEPARATE ILLUSTRATION

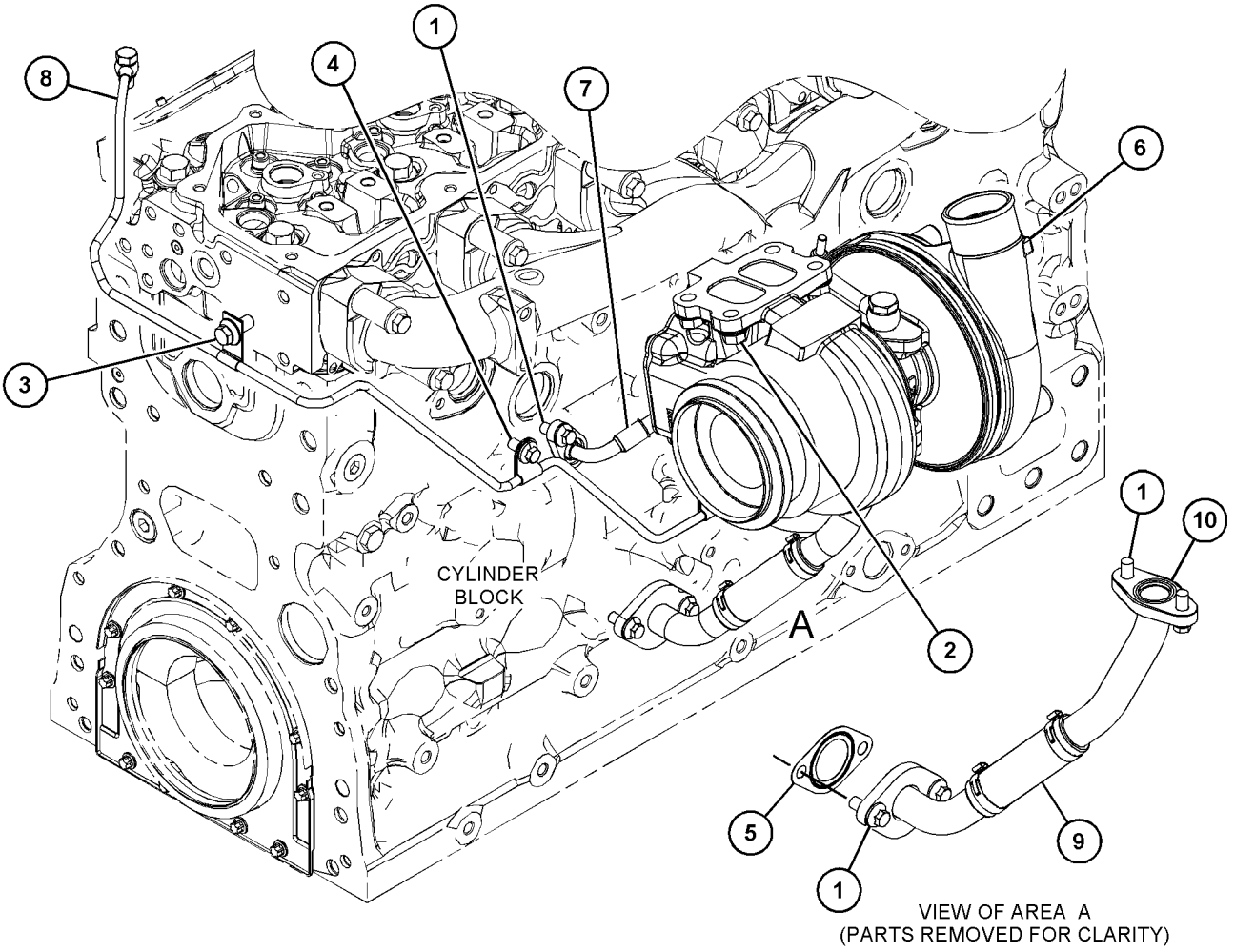

GRAPHIC #1 <END> g06327660

360-8958 FILTER GP-FUEL

S/N: E7A1-UP
PART OF 452-8547 FILTER GP-FUEL
ALSO AN ATTACHMENT

SMCS-1261 **i07103511**

NOTE	REF NO	GRAPHIC REF	PART NUMBER	QTY	PART NAME 1 2 3 4 5 6 (PRODUCT LEVEL)	SEE PAGE
	1	1	**360-8960**	1	FILTER ELEMENT-FUEL	
					AVAILABLE REPAIR KIT(S):	
			362-5412	1	KIT-DRAIN (FUEL FILTER)	
					(INCLUDES DRAIN, KNOB, & SEALS)	

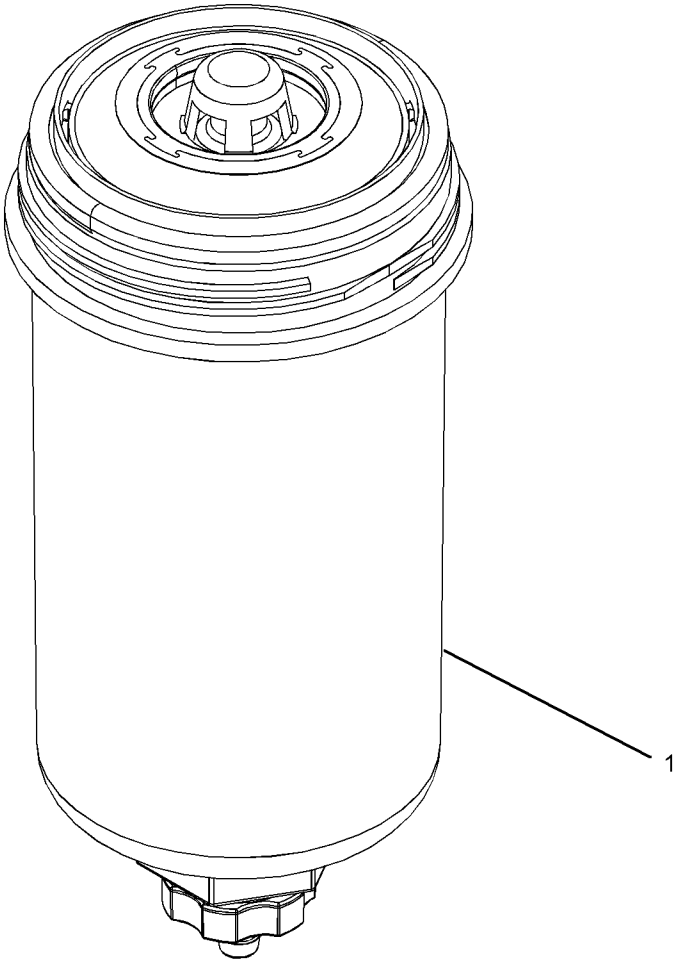

GRAPHIC #1 <END> g03173178

452-8547 FILTER GP-FUEL

S/N: E7A1-UP
PART OF 453-7163 FILTER GP-FUEL
ALSO AN ATTACHMENT

SMCS-1261 **i05938623**

NOTE	REF NO	GRAPHIC REF	PART NUMBER	QTY	PART NAME 1 2 3 4 5 6 (PRODUCT LEVEL)	SEE PAGE
Y	1	1	**360-8958**	2	FILTER GP-FUEL	77
	2	1	**362-9689**	2	SCREW-SPECIAL	
					AVAILABLE REPAIR KIT(S):	
			362-5412	2	KIT-DRAIN	
					(EACH KIT INCLUDES DRAIN, KNOB & SEAL)	

Y - SEPARATE ILLUSTRATION

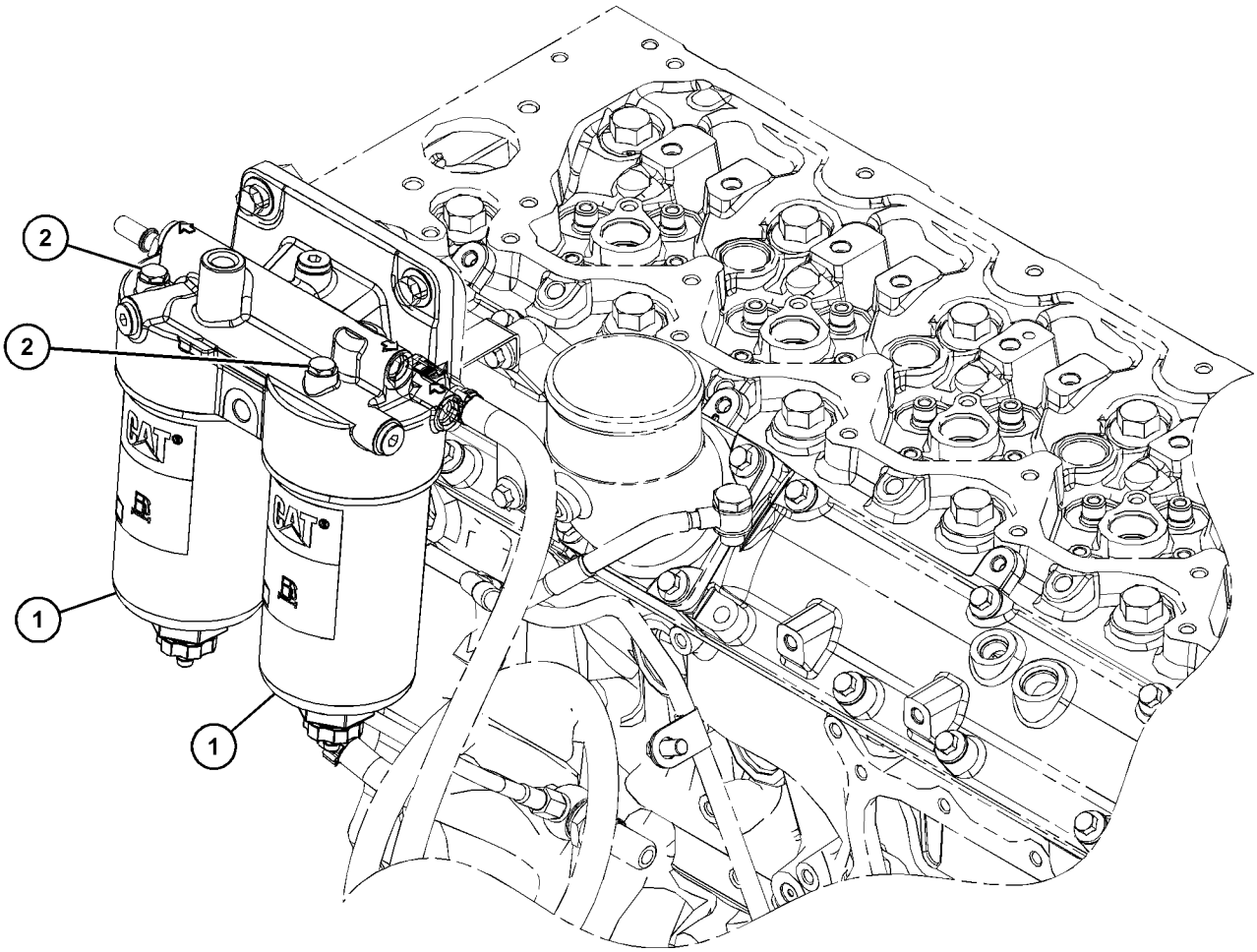

GRAPHIC #1 <END> g03701881

453-7163 FILTER GP-FUEL

S/N: E7A1-UP
PART OF 446-6728 ENGINE AR-PRIMARY
ALSO AN ATTACHMENT

SMCS-1261 **i05938569**

NOTE	REF NO	GRAPHIC REF	PART NUMBER	QTY	PART NAME 1 2 3 4 5 6 (PRODUCT LEVEL)	SEE PAGE
Y	1	1	**452-8547**	1	FILTER GP-FUEL	78

Y - SEPARATE ILLUSTRATION

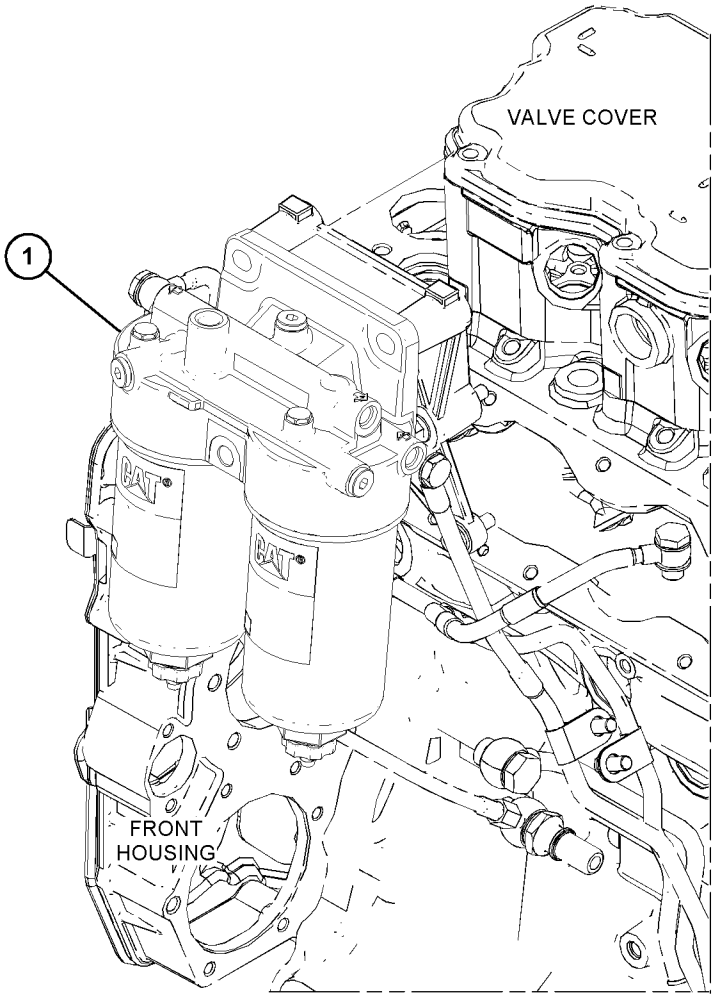

GRAPHIC #1 <END> g03695817

444-5022 FILTER GP-WATER SEP & FUEL

S/N: CH91-UP
PART OF 392-2508 LINES GP-FUEL
ALSO AN ATTACHMENT

SMCS-1261, 1263 **i07377451**

NOTE	REF NO	GRAPHIC REF	PART NUMBER	QTY	PART NAME 1 2 3 4 5 6 (PRODUCT LEVEL)	SEE PAGE
	1	1	**192-9207**	2	PLUG AS	
					(EACH INCLUDES)	
	1A	1	**126-9093**	1	SEAL	
	2	1	**439-5037**	1	FILTER AS-WATER SEP & FUEL	
	3	1	**439-5039**	1	SENSOR GP-LIQUID LEVEL	
	4	1	**439-5040**	1	BOWL AS	
	5	1	**446-0105**	1	MODULE AS	
	6	1	**445-5511**	1	VALVE AS	

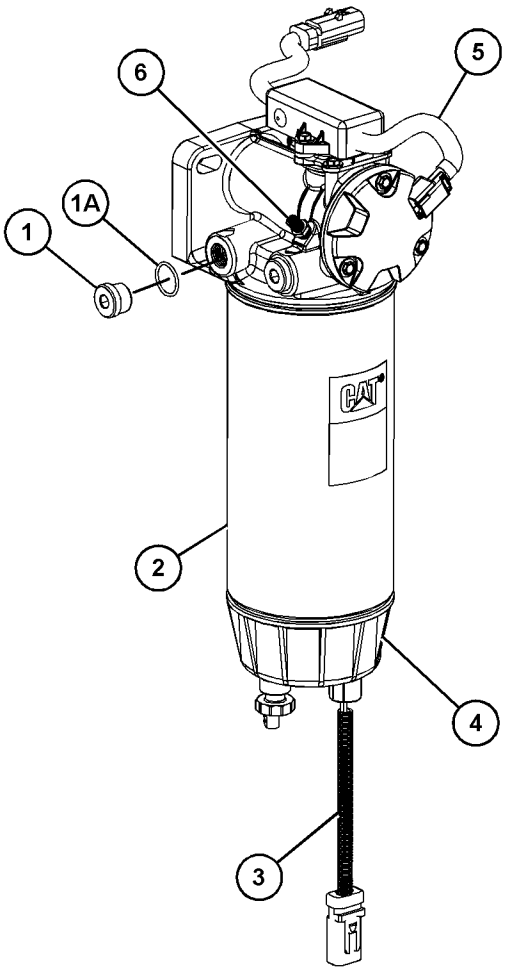

GRAPHIC #1 <END> g03651397

267-2488 HOSE GP-REFUELING

S/N: CH91-UP

PART OF 374-0829, 475-4069 PUMP GP-FUEL TRANSFER AN ATTACHMENT

SMCS-1295 **i05513052**

NOTE	REF NO	GRAPHIC REF	PART NUMBER	QTY	PART NAME 1 2 3 4 5 6 (PRODUCT LEVEL)	SEE PAGE
	1	1	**5W-8655**	1	HOSE AS (SUCTION)	
	2	1	**5W-8656**	1	SCREEN AS (REFUELING)	
	3	1	**5W-8657**	1	COUPLING	
	4	1	**275-4907**	1	CONNECTOR AS	
	5	1	**5W-8650**	2	CLAMP-HOSE	

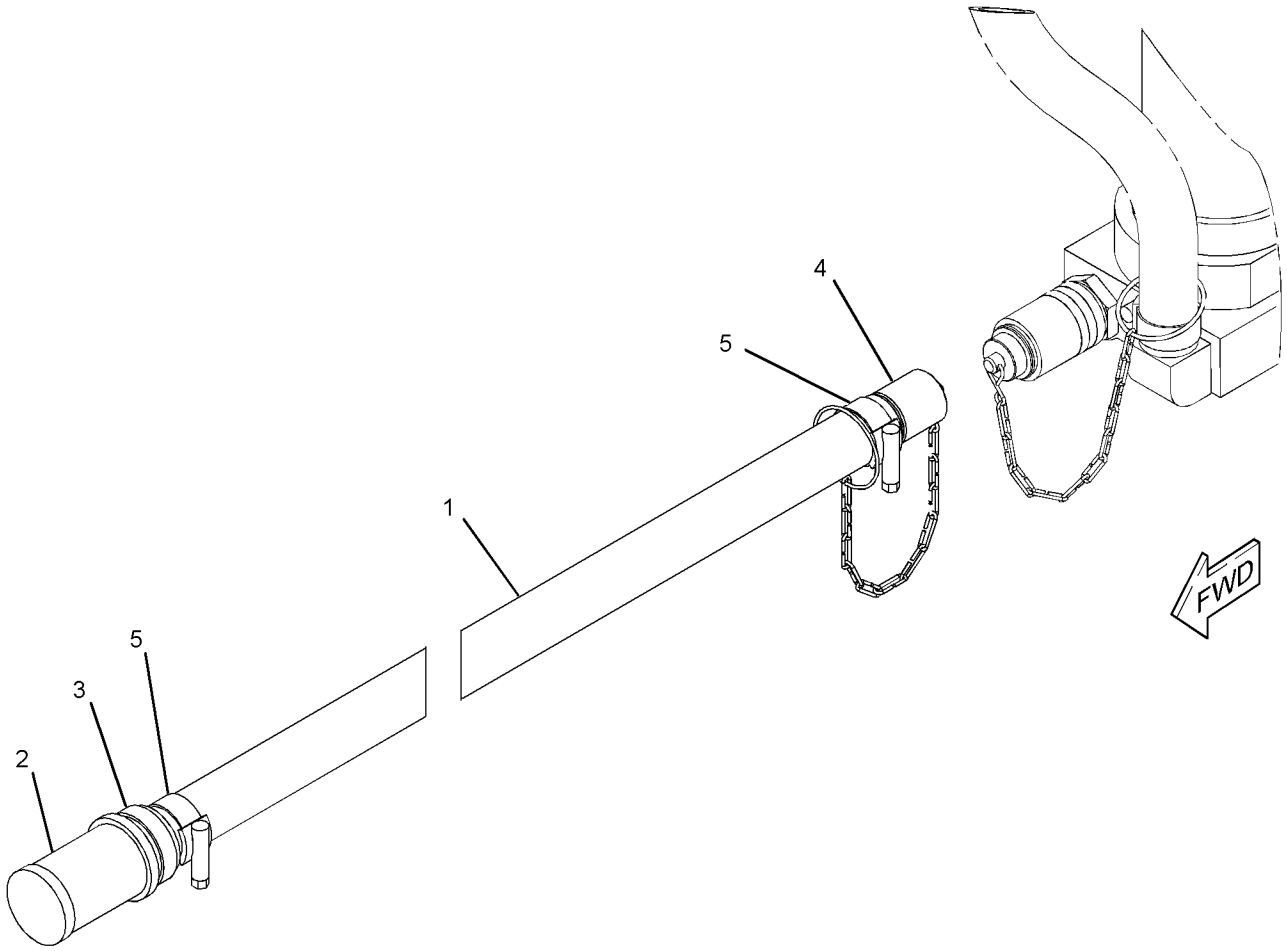

GRAPHIC #1 <END> g01318308

371-2483 INJECTOR GP-FUEL

S/N: E7A1-UP
PART OF 446-6728 ENGINE AR-PRIMARY
ALSO AN ATTACHMENT

SMCS-1251, 1254, 1290, 1713 **i06928409**

NOTE	REF NO	GRAPHIC REF	PART NUMBER	QTY	PART NAME 1 2 3 4 5 6 (PRODUCT LEVEL)	SEE PAGE
	1	1	**278-5170**	6	BOLT	
	2	1	**369-7799**	6	CLAMP-INJECTOR	
YR	3	1	**371-3974**	6	INJECTOR GP-FUEL	83
	4	1	**517-8243**	6	SLEEVE-INJECTOR	

R - REMANUFACTURED PART MAY BE AVAILABLE
Y - SEPARATE ILLUSTRATION

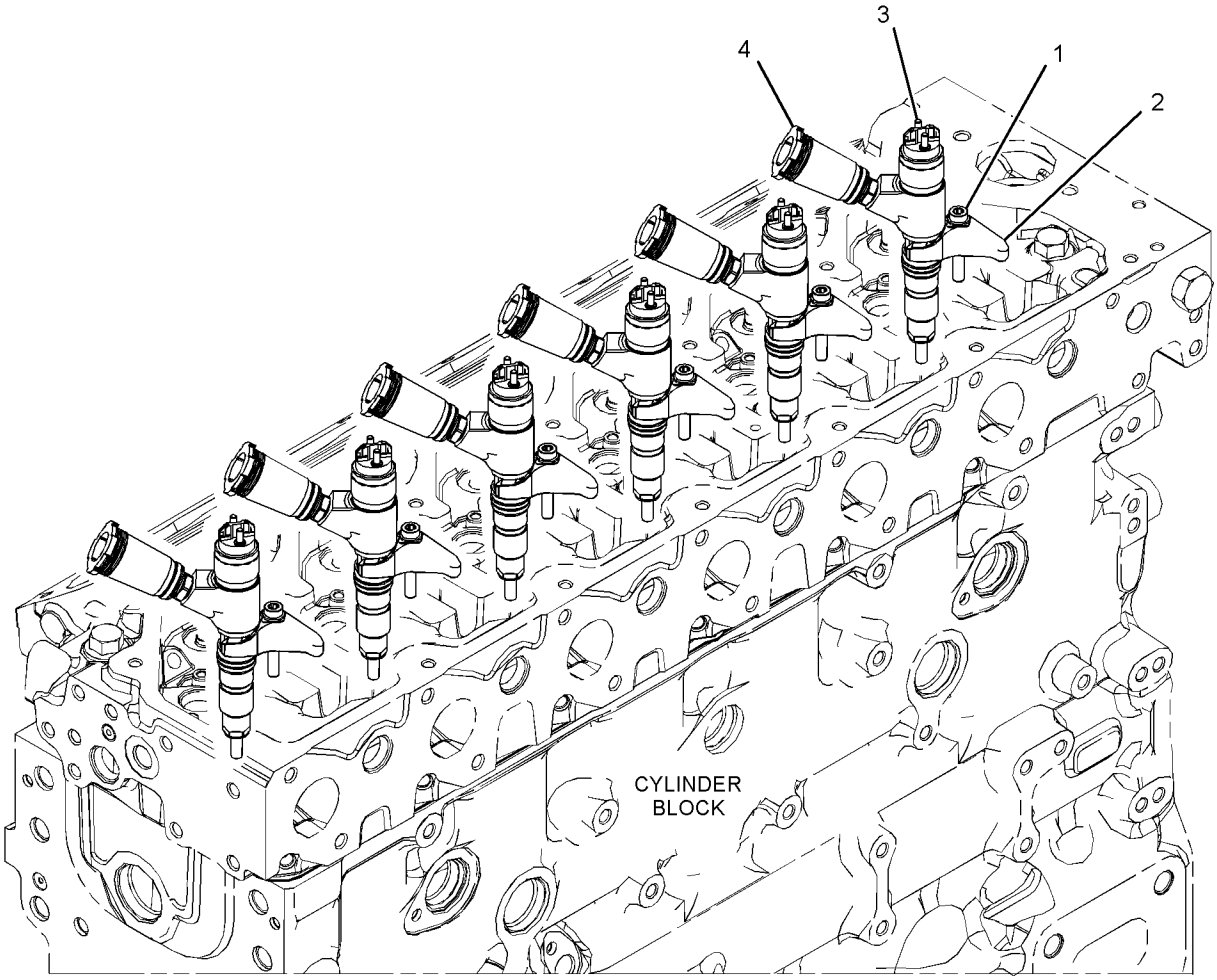

GRAPHIC #1 <END> g03169579

371-3974 INJECTOR GP-FUEL*R

S/N: E7A1-UP
PART OF 371-2483 INJECTOR GP-FUEL
ALSO AN ATTACHMENT

SMCS-1251, 1254, 1290, 1713 **i07426461**

NOTE	REF NO	GRAPHIC REF	PART NUMBER	QTY	PART NAME 1 2 3 4 5 6 (PRODUCT LEVEL)	SEE PAGE
	1	1	**376-6403**	1	WASHER-SEALING	
	2	1	**376-6405**	1	SEAL-O-RING	

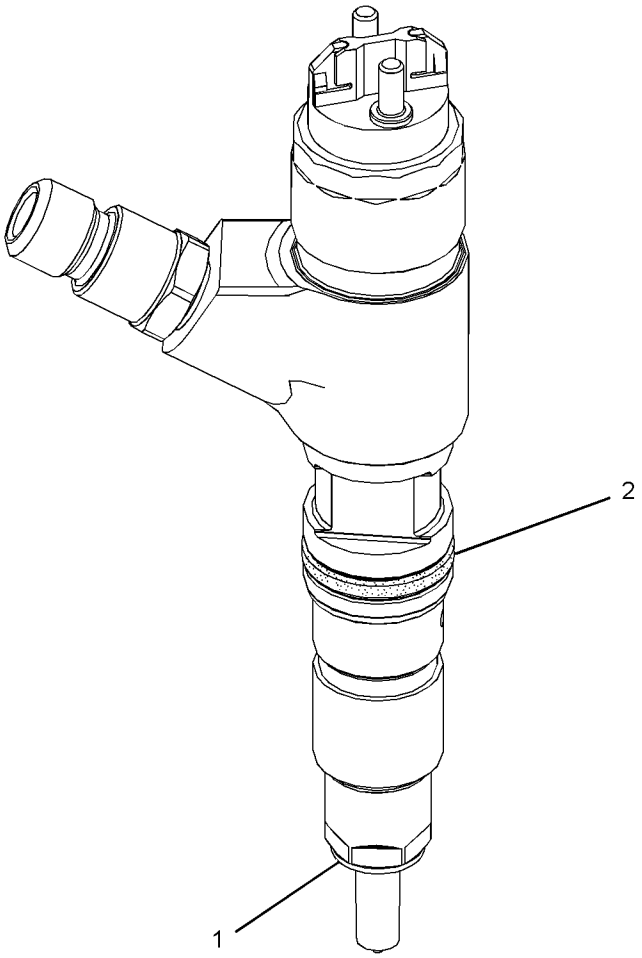

GRAPHIC #1 <END> g03110876

392-2508 LINES GP-FUEL

S/N: CH91-UP
PART OF 482-4529 ENGINE AR
ALSO AN ATTACHMENT

SMCS-1274 **i06554791**

NOTE	REF NO	GRAPHIC REF	PART NUMBER	QTY	PART NAME 1 2 3 4 5 6 (PRODUCT LEVEL)	SEE PAGE
	1	1	**199-7618**	1	PLATE AS	
	2	1	**215-9632**	2	SPACER (12X20X20-MM THK)	
	3	1	**264-3541**	2	CLAMP	
	4	1	**264-3542**	2	GROMMET	
	5	1	**275-4910**	4	STRAP	
	6	1	**355-4053**	1	VALVE GP-BALL (FUEL SHUTOFF)	
		1	**157-0489**	1	WASHER	
M		1	**162-1381**	1	BOLT AS	
		1	**196-7515**	1	LEVER	
	7	1	**364-3890**	1	HOSE AS	
	8	1	**392-2478**	1	BRACKET AS	
	9	1	**392-2480**	1	HOSE AS	
	10	1	**392-2510**	1	HOSE AS	
	11	1	**392-2511**	1	HOSE AS	
	12	1	**426-4076**	2	ELBOW AS	
					(EACH INCLUDES)	
		1	**8T-6850**	1	SEAL-O-RING	
		1	**416-7151**	1	RING-RETAINER	
	13	1	*442-1579*	2	FITTING AS	
					(EACH INCLUDES)	
		1	**126-9093**	1	SEAL	
		1	**439-1840**	1	FITTING	
	14	1	**444-5015**	1	HOSE AS	
	15	1	**444-5016**	1	BRACKET	
Y	16	1	**444-5022**	1	FILTER GP-WATER SEP & FUEL	80
	17	1	**482-9790**	1	BRACKET	
	18	1	**067-2551**	2	CLIP	
M	19	1	**105-3484**	2	BOLT-SOCKET HEAD (M10X1.5X25-MM)	
M	20	1	**108-4282**	1	BOLT-SOCKET HEAD (M10X1.5X100-MM)	
M	21	1	**270-9433**	2	BOLT-SOCKET HEAD (M6X1X45-MM)	
	22	1	**351-4321**	1	CLIP (LOOP)	
	23	1	**3S-2093**	5	STRAP-CABLE	
	24	1	**3S-8665**	1	CLIP (LOOP)	
	25	1	**5P-4116**	2	WASHER-HARD (8.8X20.5X2-MM THK)	
	26	1	**6D-3479**	2	CLIP (LOOP)	
M	27	1	**6V-2317**	2	BOLT (M8X1.25X30-MM)	
	28	1	**8T-4121**	10	WASHER-HARD (11X21X2.5-MM THK)	
M	29	1	**8T-4137**	3	BOLT (M10X1.5X20-MM)	
M	30	1	**8T-4186**	4	BOLT (M10X1.5X40-MM)	
M	31	1	**8T-4195**	2	BOLT (M10X1.5X30-MM)	
M	32	1	**8T-4200**	1	BOLT (M8X1.25X16-MM)	
	33	1	**8T-4224**	1	WASHER-HARD (8.8X16X2-MM THK)	
	34	1	**9X-8256**	2	WASHER (6.6X12X2-MM THK)	

M - METRIC PART
Y - SEPARATE ILLUSTRATION

392-2508 **LINES GP-FUEL (**contd.**)** **i06554791**

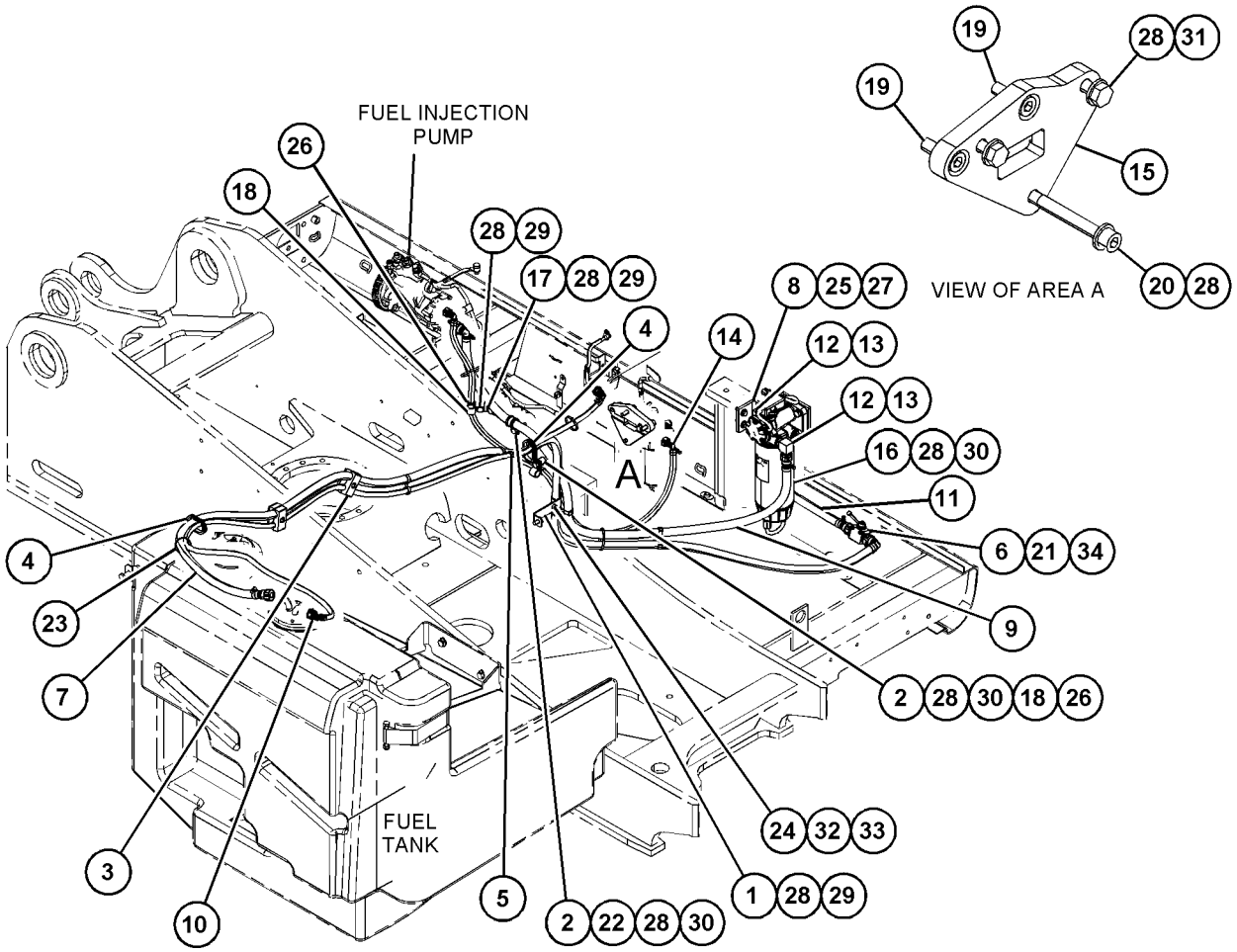

GRAPHIC #1 <END> g06115188

416-1069 LINES GP-FUEL

S/N: E7A1-UP
PART OF 479-3169 LINES GP-FUEL
ALSO AN ATTACHMENT

SMCS-1274 **i05939479**

NOTE	REF NO	GRAPHIC REF	PART NUMBER	QTY	PART NAME 1 2 3 4 5 6 (PRODUCT LEVEL)	SEE PAGE
	1	1	**286-2890**	2	WASHER	
	2	1	**377-5988**	1	BOLT	
	3	1	**416-1065**	1	LINE AS-FUEL	
	4	1	**277-4993**	1	SEAL-O-RING	

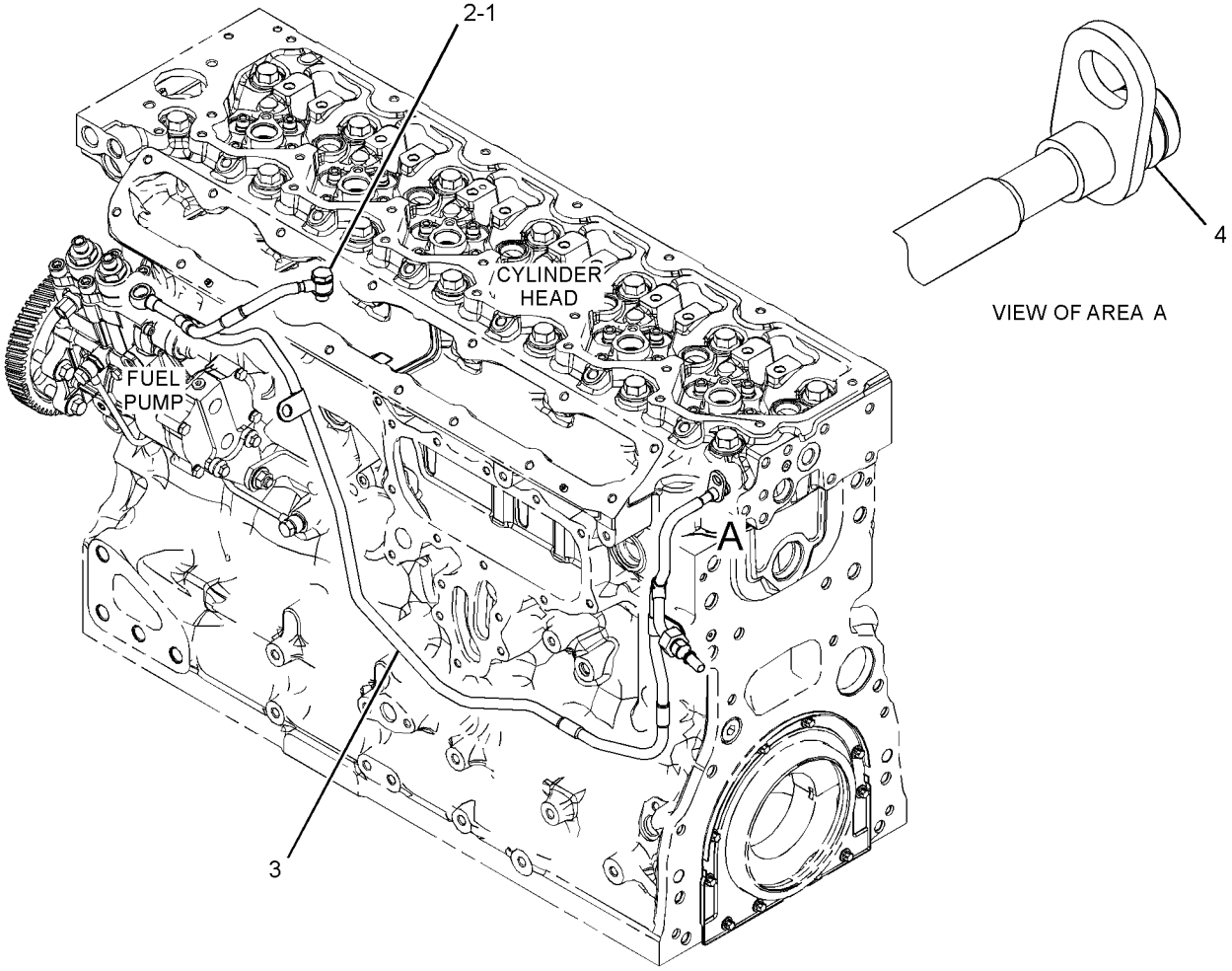

GRAPHIC #1 <END> g03564543

433-1316 LINES GP-FUEL

S/N: E7A1-UP
PART OF 479-3169 LINES GP-FUEL
ALSO AN ATTACHMENT

SMCS-1274 **i07174949**

NOTE	REF NO	GRAPHIC REF	PART NUMBER	QTY	PART NAME 1 2 3 4 5 6 (PRODUCT LEVEL)	SEE PAGE
	1	1	**246-4361**	2	WASHER (10.5X14X1.5-MM THK)	
	2	1	**385-1398**	1	CONNECTION-FUEL	
	3	1	**386-1864**	1	BOLT-BANJO	
	4	1	**247-4928**	2	WASHER (16.5X20.5X1.6-MM THK)	
	5	1	**433-0190**	1	LINE AS-FUEL	

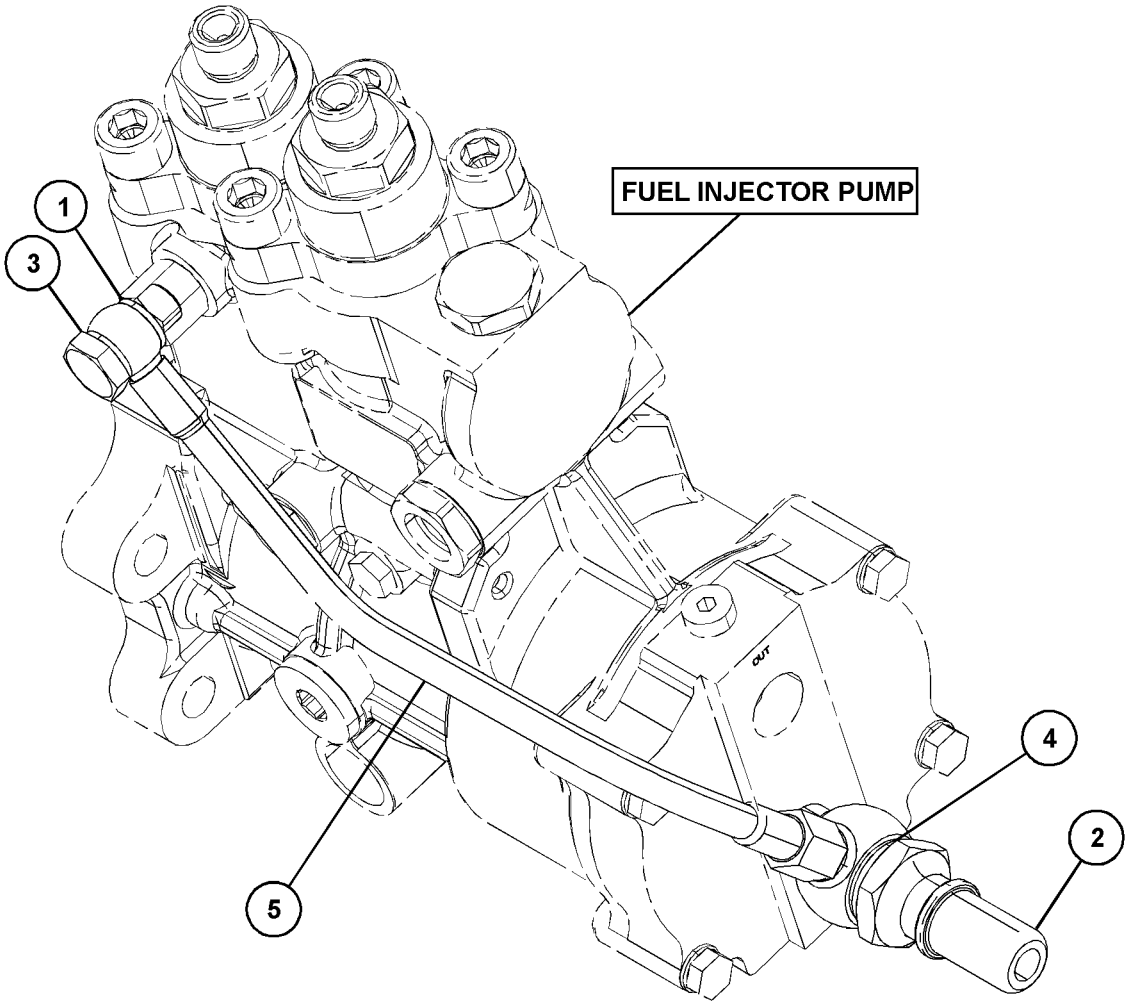

GRAPHIC #1 <END> g06240340

479-3169 LINES GP-FUEL

S/N: E7A1-UP
PART OF 446-6728 ENGINE AR-PRIMARY
ALSO AN ATTACHMENT
TYPE 1

SMCS-1274 **i06229354**

NOTE	REF NO	GRAPHIC REF	PART NUMBER	QTY	PART NAME 1 2 3 4 5 6 (PRODUCT LEVEL)	SEE PAGE
M	1	1	**6I-0654**	1	BOLT (M10X1.5X25-MM)	
M	2	1	**6I-4200**	2	BOLT (M10X1.5X16-MM)	
M	3	1	**100-4458**	1	BOLT (M8X1.25X14-MM)	
M	4	1	**103-5687**	1	BOLT (M10X1.5X85-MM)	
M	5	1	**124-3815**	1	BOLT (M8X1.25X16-MM)	
M	6	1	**164-7468**	2	BOLT (M10X1.5X95-MM)	
	7	1	**247-4928**	1	WASHER (16.5X20.5X1.6-MM THK)	
	8	1	*330-9723*	2	PLUG AS	
					(EACH INCLUDES)	
	8A	1	**228-7100**	1	SEAL-O-RING	
	8B	1	**241-6157**	1	PLUG (M12X1.5-THD)	
	9	1	**348-0495**	1	WASHER	
	10	1	**356-3986**	2	CONNECTOR AS	
					(EACH INCLUDES)	
	10A	1	**277-4993**	1	SEAL-O-RING	
	11	1	*376-4068*	1	BRACKET AS	
M	11A	1	**159-9541**	3	NUT-WELD (M10X1.5-THD)	
	12	1	**376-9967**	1	CONNECTION-FUEL	
	13	1	**387-3577**	1	SUPPORT GP-LINES	
	14	1	**389-5775**	1	BRACKET	
	15	1	**391-1817**	1	SUPPORT GP-LINES	
	16	1	**391-2493**	1	CONNECTION-FUEL	
Y	17	1	*416-1069*	1	LINES GP-FUEL	86
	18	1	**432-8723**	1	BRACKET AS	
Y	19	1	**433-1316**	1	LINES GP-FUEL	87
	20	1	**453-6400**	1	LINE AS-FUEL	
	20A	1	**347-8645**		HOSE (150-CM)	
	20B	1	**395-1091**	1	CONNECTOR-FUEL	
M	21	1	**6I-0217**	1	BOLT (M8X1.25X20-MM)	
M	22	1	**6I-0260**	1	BOLT (M8X1.25X25-MM)	

M - METRIC PART
Y - SEPARATE ILLUSTRATION

479-3169 **LINES GP-FUEL** (contd.) **i06229354**

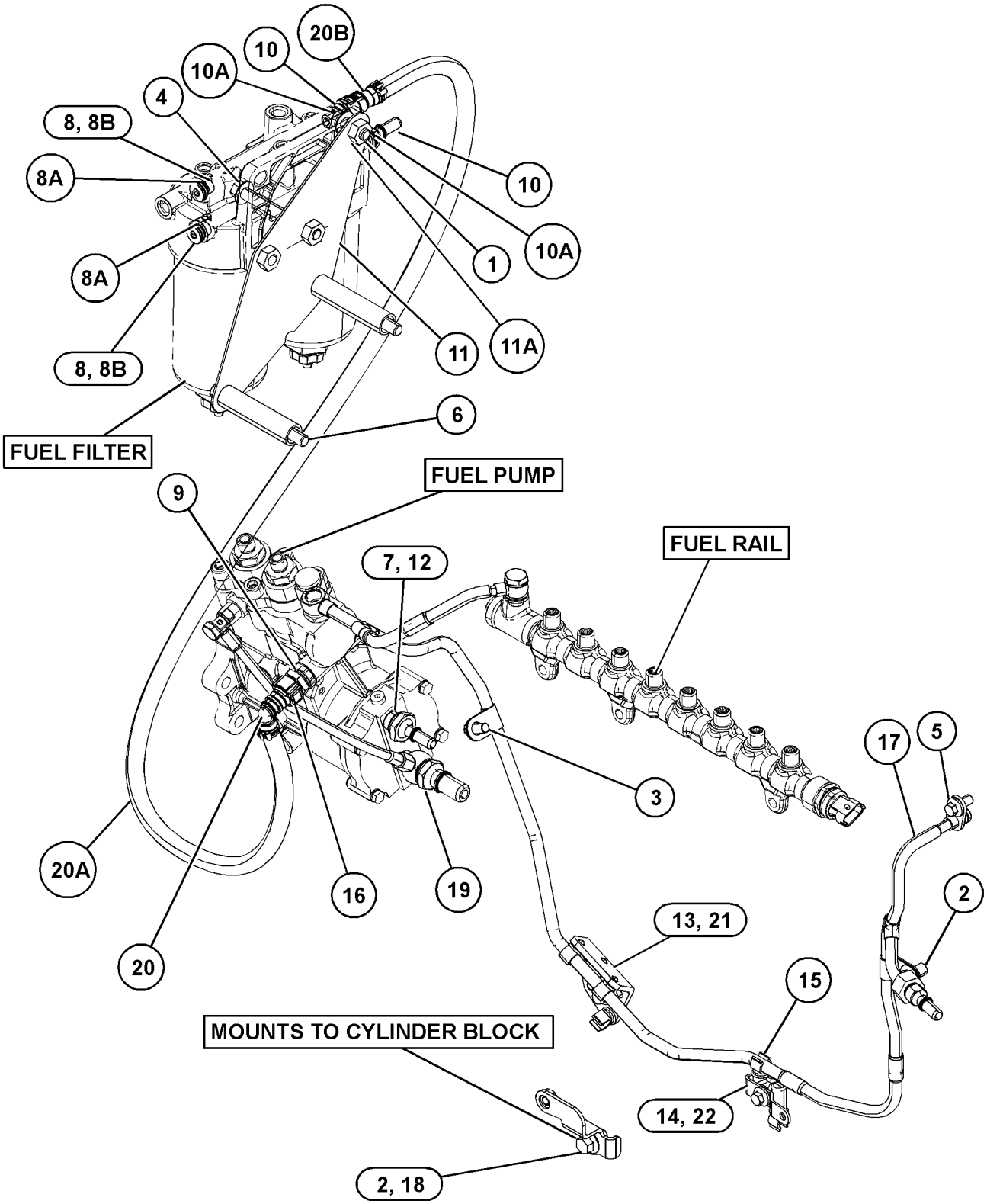

GRAPHIC #1 <END> g03864660

479-3169 LINES GP-FUEL

S/N: E7A1-UP
PART OF 446-6728 ENGINE AR-PRIMARY
ALSO AN ATTACHMENT
TYPE 2

SMCS-1274 **i07156668**

NOTE	REF NO	GRAPHIC REF	PART NUMBER	QTY	PART NAME 1 2 3 4 5 6 (PRODUCT LEVEL)	SEE PAGE
M	1	1	**6I-0217**	1	BOLT (M8X1.25X20-MM)	
M	2	1	**6I-0260**	1	BOLT (M8X1.25X25-MM)	
M	3	1	**6I-0654**	1	BOLT (M10X1.5X25-MM)	
M	4	1	**6I-4200**	2	BOLT (M10X1.5X16-MM)	
M	5	1	**100-4458**	1	BOLT (M8X1.25X14-MM)	
M	6	1	**103-5687**	1	BOLT (M10X1.5X85-MM)	
CM	7	1	**113-7584**	2	BOLT (M10X1.5X110-MM)	
M	8	1	**124-3815**	1	BOLT (M8X1.25X16-MM)	
	9	1	**247-4928**	1	WASHER (16.5X20.5X1.6-MM THK)	
	10	1	*330-9723*	2	PLUG AS	
					(EACH INCLUDES)	
	10A	1	**228-7100**	1	SEAL-O-RING	
	10B	1	**241-6157**	1	PLUG (M12X1.5-THD)	
	11	1	**348-0495**	1	WASHER	
	12	1	**356-3986**	2	CONNECTOR AS	
					(EACH INCLUDES)	
	12A	1	**277-4993**	1	SEAL-O-RING	
	13	1	**376-9967**	1	CONNECTION-FUEL	
	14	1	**387-3577**	1	SUPPORT GP-LINES	
		1	**366-9373**	4	CLIP	
	15	1	**389-5775**	1	BRACKET	
	16	1	**391-1817**	1	SUPPORT GP-LINES	
		1	**366-9373**	2	CLIP	
	17	1	**391-2493**	1	CONNECTION-FUEL	
Y	18	1	*416-1069*	1	LINES GP-FUEL	86
	19	1	**432-8723**	1	BRACKET AS	
Y	20	1	**433-1316**	1	LINES GP-FUEL	87
	21	1	**453-6400**	1	LINE AS-FUEL	
E	21A	1	**347-8645**		HOSE (150-CM)	
	21B	1	**355-0632**	1	CONNECTOR-SPECIAL	
	21C	1	**359-7115**	1	CONNECTOR-FUEL	
C	22	1	*535-8994*	1	BRACKET AS	
M	22A	1	**159-9541**	3	NUT-WELD (M10X1.5-THD)	

C - CHANGE FROM PREVIOUS TYPE
E - ORDER BY THE CENTIMETER
M - METRIC PART
Y - SEPARATE ILLUSTRATION

479-3169 **LINES GP-FUEL** (contd.) **i07156668**

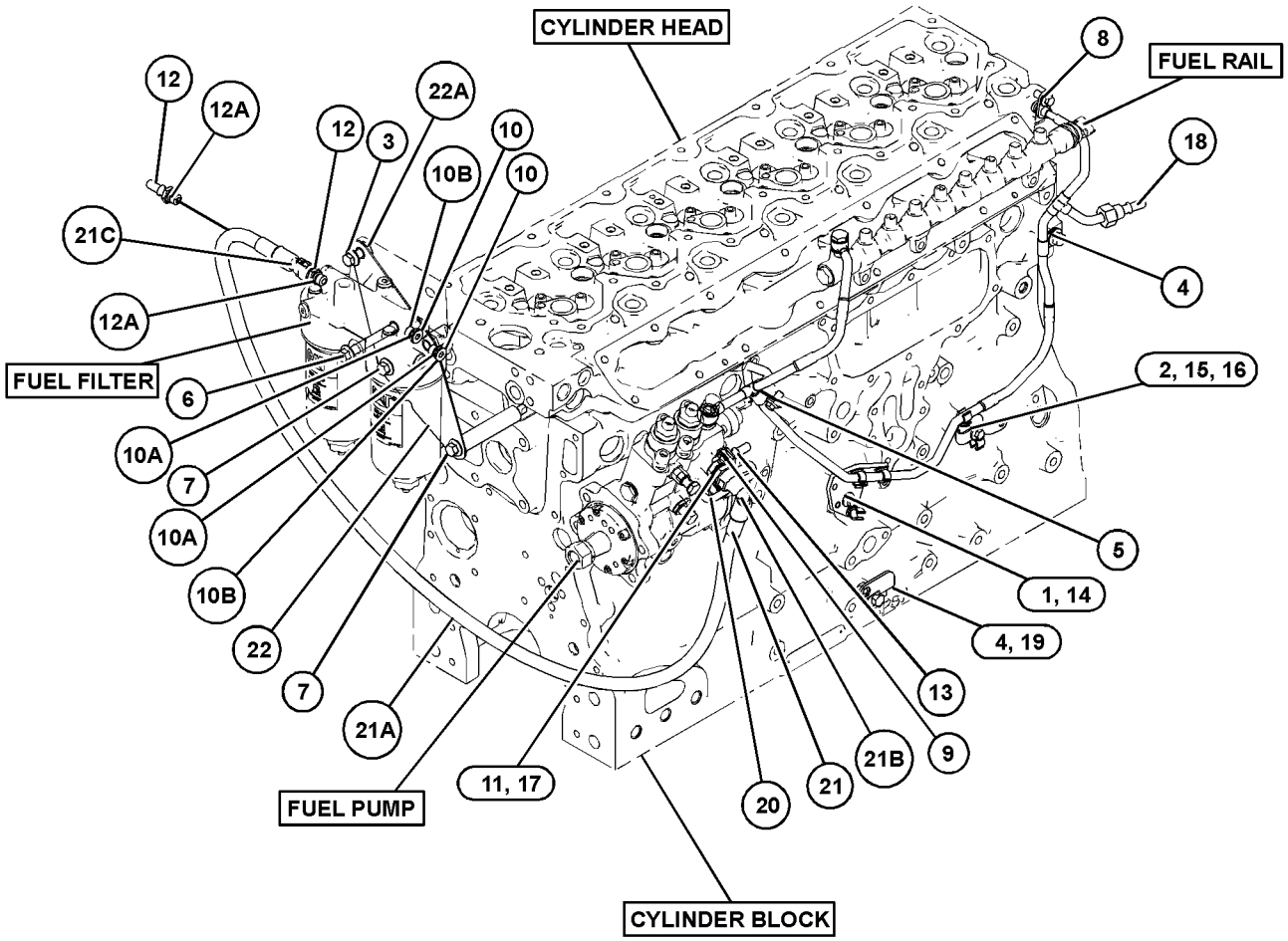

GRAPHIC #1 <END> g06220131

370-5520 LINES GP-FUEL INJECTION

S/N: E7A1-UP
PART OF 394-9639 RAIL GP-FUEL
ALSO AN ATTACHMENT

SMCS-1252, 1254 **i07175155**

NOTE	REF NO	GRAPHIC REF	PART NUMBER	QTY	PART NAME 1 2 3 4 5 6 (PRODUCT LEVEL)	SEE PAGE
	1	1	**395-1633**	1	BRACKET AS	
M		1	**6I-0631**	1	BOLT (M6X1X12-MM)	
	2	1	**370-5516**	1	LINE AS-FUEL INJECTION	
	3	1	**370-5517**	1	LINE AS-FUEL INJECTION	
	4	1	**370-5518**	1	LINE AS-FUEL INJECTION	

M - METRIC PART

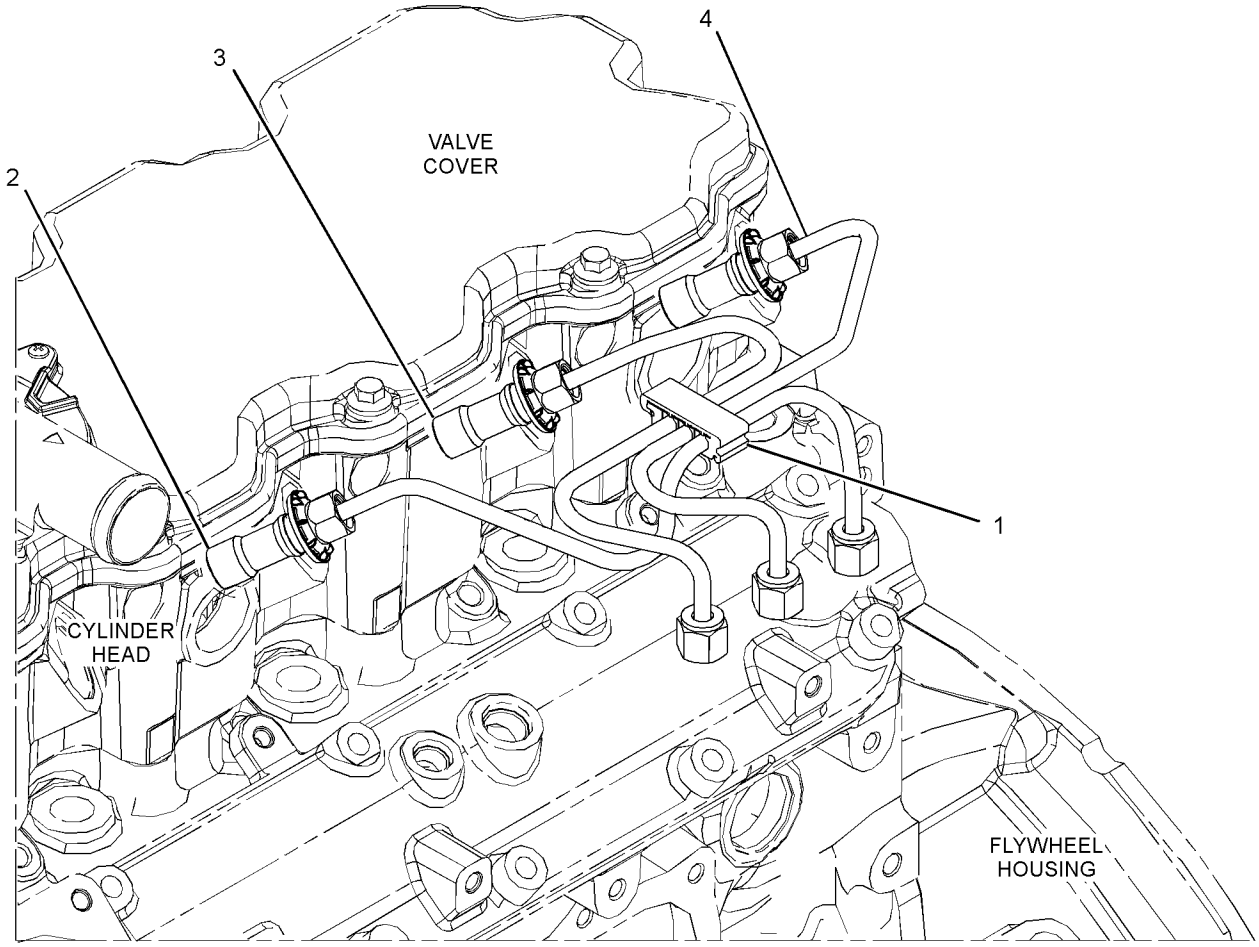

GRAPHIC #1 <END> g03380791

394-0525 LINES GP-FUEL INJECTION

S/N: E7A1-UP
PART OF 394-9639 RAIL GP-FUEL
ALSO AN ATTACHMENT

SMCS-1252, 1254 **i07076143**

NOTE	REF NO	GRAPHIC REF	PART NUMBER	QTY	PART NAME 1 2 3 4 5 6 (PRODUCT LEVEL)	SEE PAGE
	1	1	**395-1633**	1	BRACKET AS	
M	1A	1	**6I-0631**	1	BOLT (M6X1X12-MM)	
	2	1	**370-5513**	1	LINE AS-FUEL	
	3	1	**393-5467**	1	LINE AS-FUEL	
	4	1	**393-5468**	1	LINE AS-FUEL	

M - METRIC PART

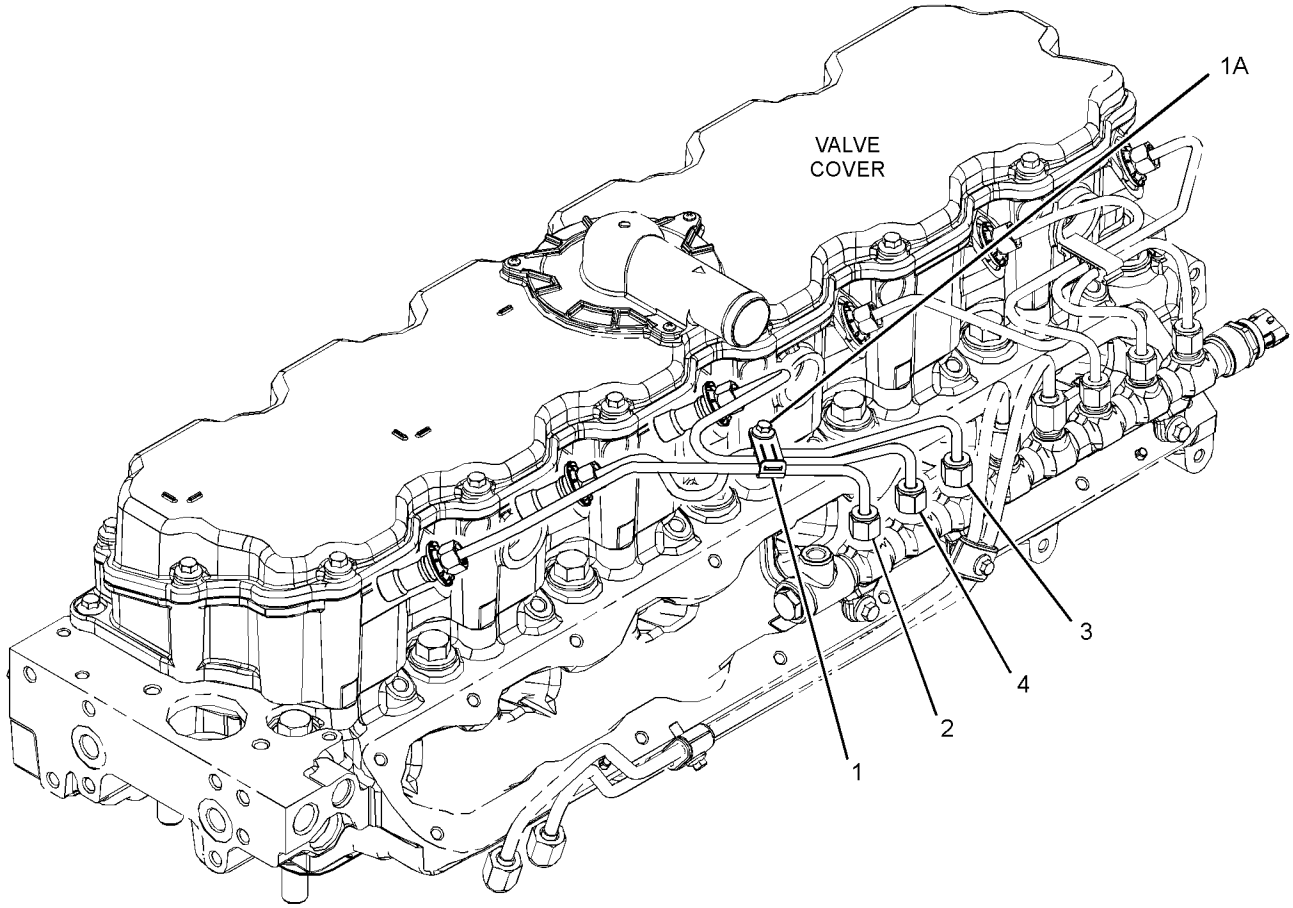

GRAPHIC #1 <END> g03479680

275-4903 PUMP & MTG GP-FUEL TRANSFER

S/N: CH91-UP

PART OF 475-4069 PUMP GP-FUEL TRANSFER

AN ATTACHMENT

SMCS-1256 **i06022090**

NOTE	REF NO	GRAPHIC REF	PART NUMBER	QTY	PART NAME 1 2 3 4 5 6 (PRODUCT LEVEL)	SEE PAGE
	1	1	**175-4807**	1	PUMP & MOTOR GP (FUEL TRANSFER)	
		1	**102-8802**	1	KIT-RECEPTACLE (2-PIN)	
					(INCLUDES RECEPTACLE AS & WEDGE)	
		1	**9W-0852**	2	PIN-CONNECTOR (14-GA TO 16-GA)	
	2	1	**207-2159**	1	ELBOW	
	3	1	**275-4904**	1	COUPLING GP	
		1	**267-2486**	1	COUPLING AS	
		1	**275-4905**	1	PLUG AS	
	4	1	**8T-9402**	1	CLAMP-HOSE	
E	5	1	**120-9729**		HOSE (40-CM)	

E - ORDER BY THE CENTIMETER

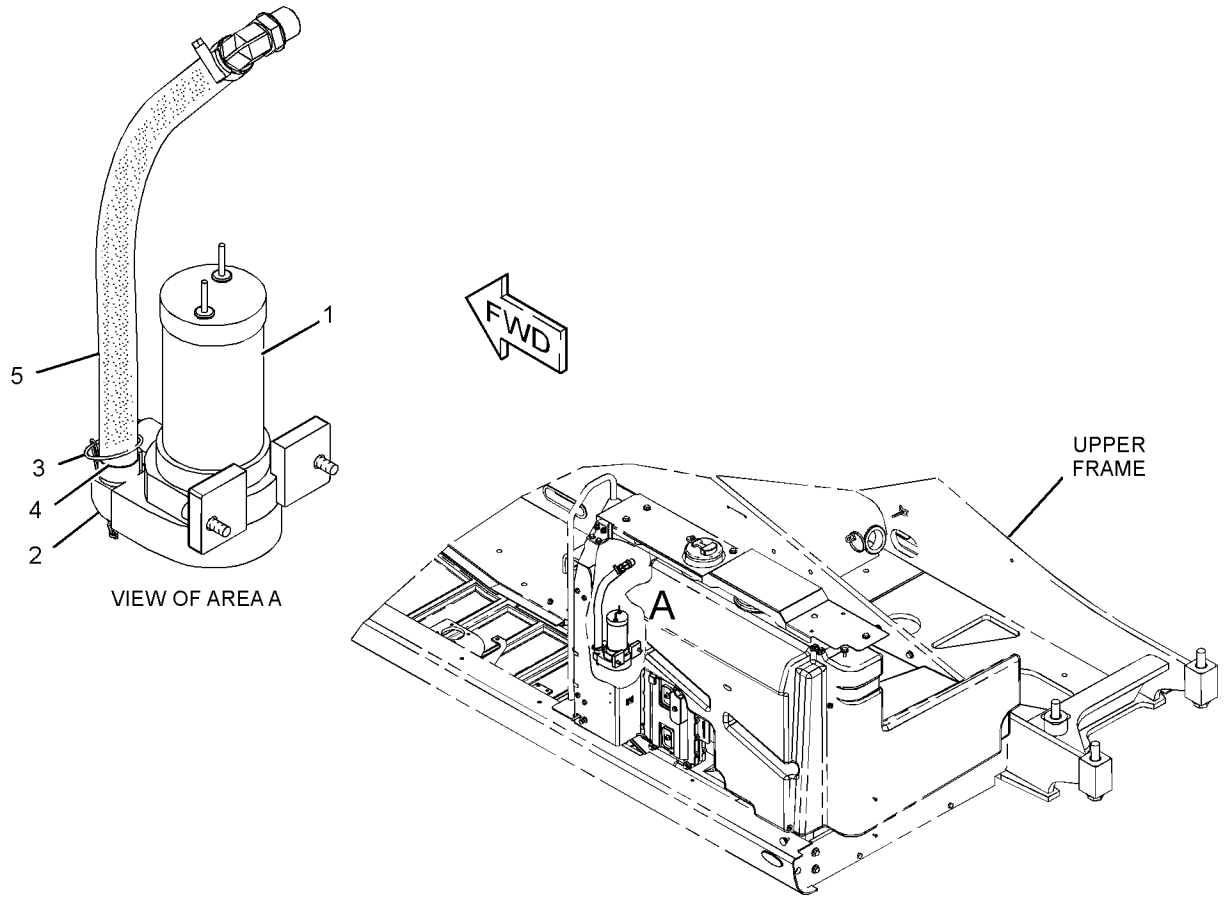

GRAPHIC #1 <END> g01320893

375-2647 PUMP GP-FUEL INJECTION*R

S/N: E7A1-UP
PART OF 391-4811 PUMP GP-FUEL INJECTION
ALSO AN ATTACHMENT

SMCS-1251, 1290 **i07351526**

NOTE	REF NO	GRAPHIC REF	PART NUMBER	QTY	PART NAME 1 2 3 4 5 6 (PRODUCT LEVEL)	SEE PAGE
	1	1	**386-3819**	1	KEY-SHAFT	
	2	1	**375-8254**	1	VALVE	
	3	1	**376-6409**	1	SEAL	
	4	1	**376-6410**	1	RETAINER-WASHER	
	5	1	**376-6411**	1	NUT-SHAFT	
	6	1	**386-2971**	2	WASHER	
	7	1	**386-2976**	2	WASHER	
	8	1	**453-0790**	3	BOLT	
	9	1	**454-5109**	1	BOLT-BANJO	

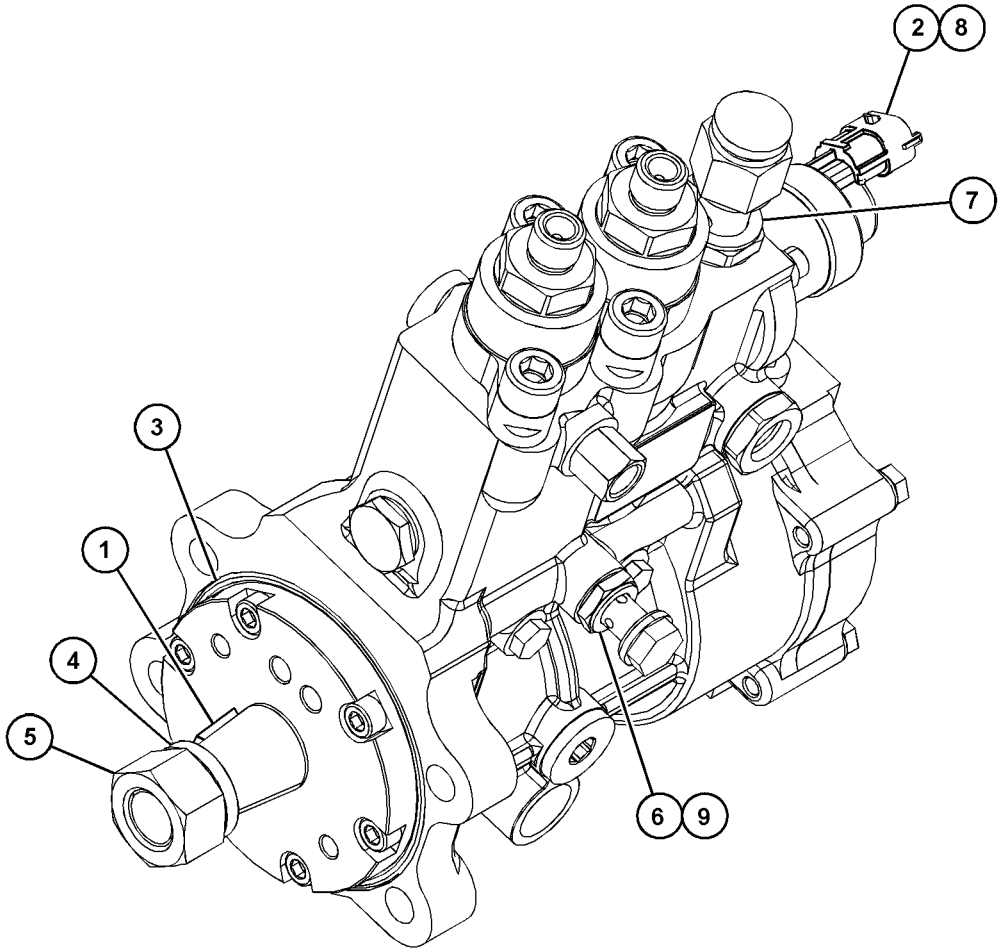

GRAPHIC #1 <END> g06182840

391-4811 PUMP GP-FUEL INJECTION

S/N: E7A1-UP
PART OF 446-6728 ENGINE AR-PRIMARY
ALSO AN ATTACHMENT

SMCS-1251, 1290 **i07377589**

NOTE	REF NO	GRAPHIC REF	PART NUMBER	QTY	PART NAME 1 2 3 4 5 6 (PRODUCT LEVEL)	SEE PAGE
M	1	1	**286-0123**	4	BOLT (M10X1.5X35-MM THK)	
M	2	1	**6I-0654**	3	BOLT (M10X1.5X25-MM)	
	3	1	**371-2684**	1	BRACKET	
	4	1	**371-2691**	1	BRACKET	
	5	1	**371-7263**	1	LINE AS-FUEL	
YR	6	1	**375-2647**	1	PUMP GP-FUEL INJECTION	95
	7	1	**476-2947**	1	GEAR-FUEL PUMP (68-TEETH)	
M	8	1	**6I-0217**	2	BOLT (M8X1.25X20-MM)	
	9	1	**346-0006**	1	BOLT-SPECIAL	
	10	1	**346-0007**	2	WASHER	
M	11	1	**6I-0594**	1	NUT (M10X1.5-THD)	

M - METRIC PART
R - REMANUFACTURED PART MAY BE AVAILABLE
Y - SEPARATE ILLUSTRATION

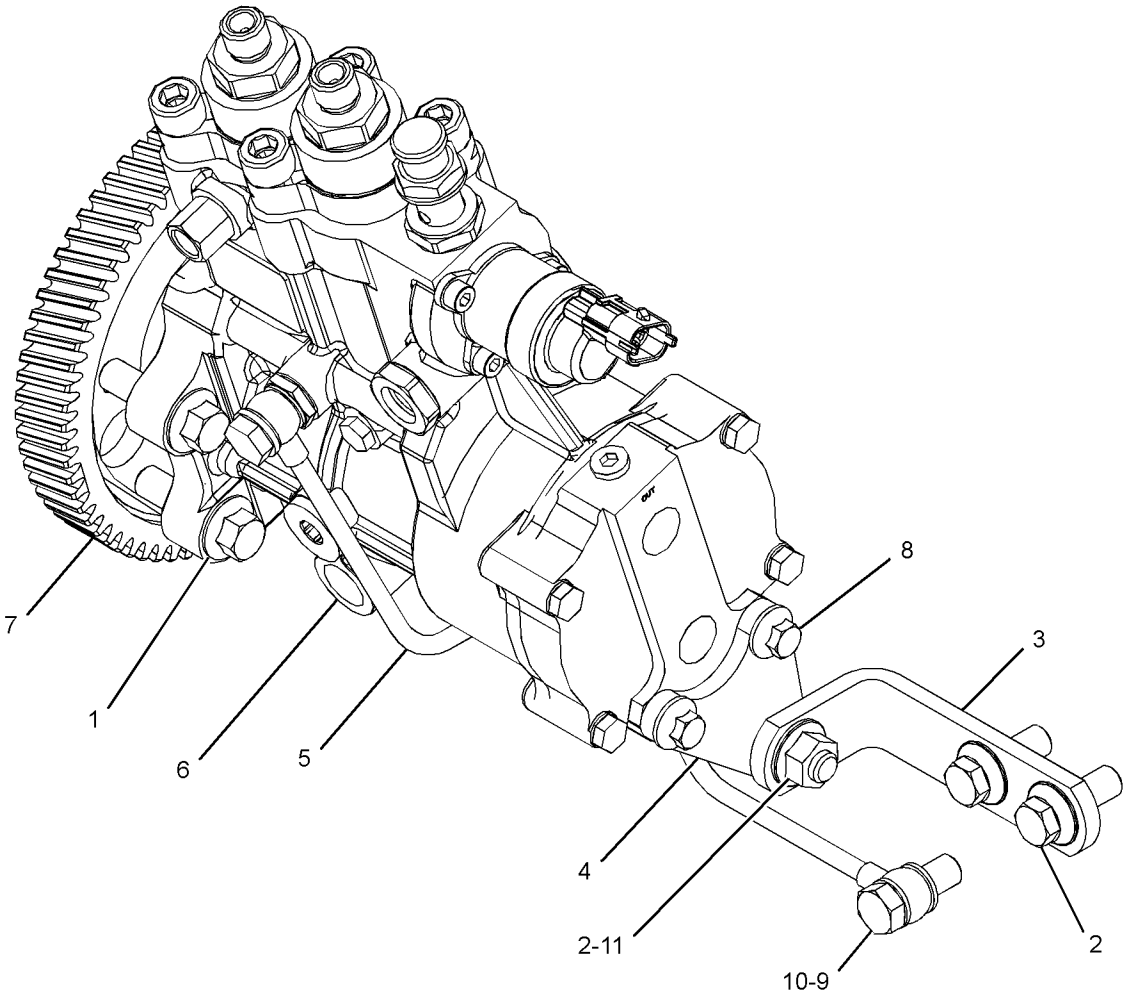

GRAPHIC #1 <END> g03378913

374-0829 PUMP GP-FUEL TRANSFER

S/N: CH91-UP
PART OF 453-8185 DISTRIBUTION AR
AN ATTACHMENT

SMCS-1256 **i06861629**

NOTE	REF NO	GRAPHIC REF	PART NUMBER	QTY	PART NAME 1 2 3 4 5 6 (PRODUCT LEVEL)	SEE PAGE
	1	1	**8T-9402**	1	CLAMP-HOSE	
	2	1	**121-5327**	1	GROMMET	
	3	1	**196-5650**	1	SWITCH AS (REFUELING PUMP RELAY)	
M		1	**197-6076**	1	NUT (M30X1-THD)	
		1	**197-6082**	1	BOOT	
	4	1	**208-1658**	1	FILM-INSTRUCTION (REFUELING)	
Y	5	1	**241-8368**	1	SWITCH GP-MAGNETIC (24-VOLT)	189
Y	6	1	*267-2488*	1	HOSE GP-REFUELING	81
	7	1	**275-4918**	1	ELBOW	
Y	8	1	*374-0830*	1	PUMP GP-FUEL TRANSFER	99
M	9	1	**289-9555**	2	BOLT-SOCKET HEAD (M8X1.25X30-MM)	
	10	1	**2M-9780**	1	SEAL-O-RING	
M	11	1	**5C-2890**	2	NUT (M6X1-THD)	
M	12	1	**8T-4138**	2	BOLT (M6X1X20-MM)	
	13	1	**8T-4224**	2	WASHER-HARD (8.8X16X2-MM THK)	
	14	1	**9X-8256**	4	WASHER (6.6X12X2-MM THK)	

M - METRIC PART
Y - SEPARATE ILLUSTRATION

374-0829 **PUMP GP-FUEL TRANSFER (**contd.**)** **i06861629**

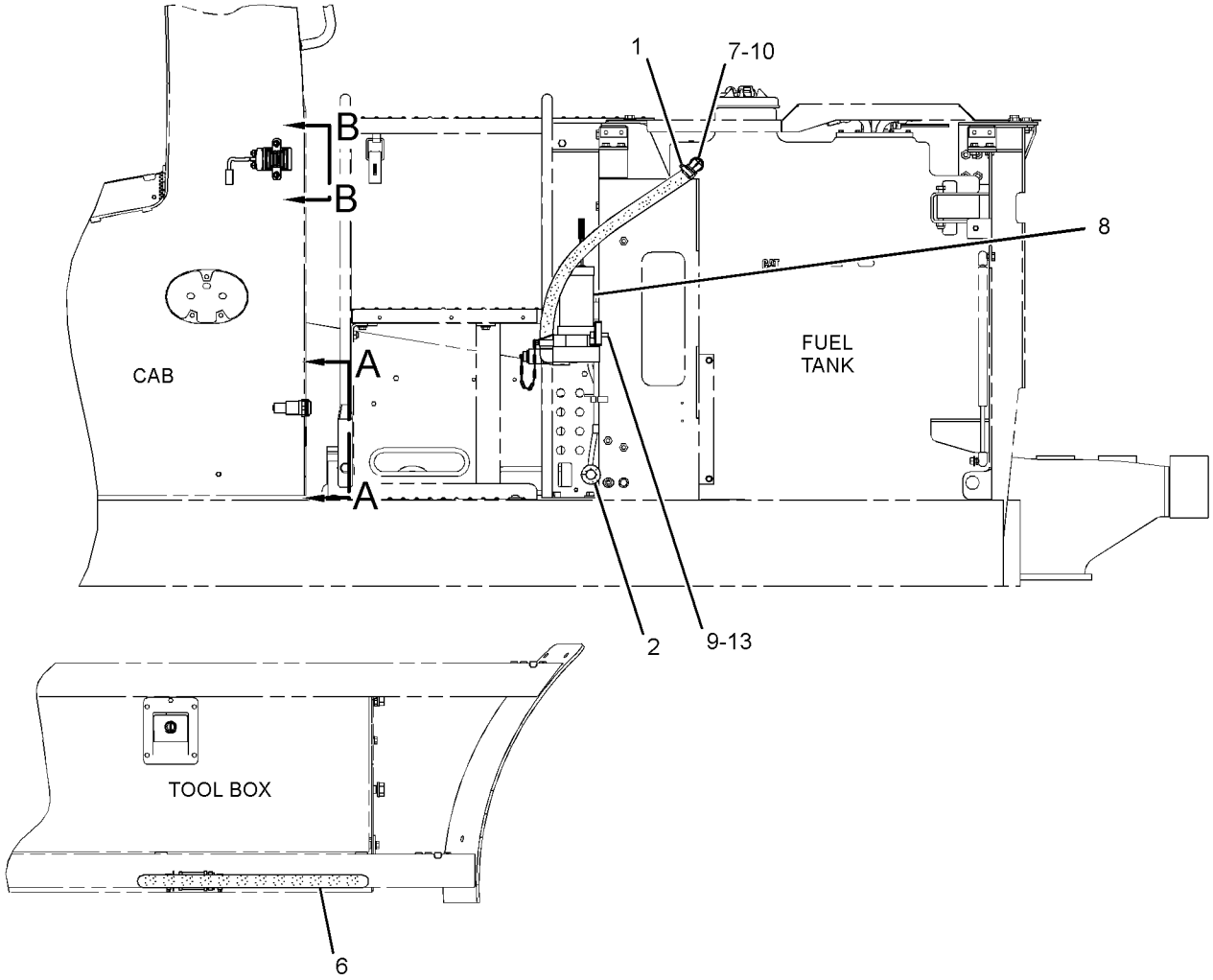

LEFT SIDE VIEW

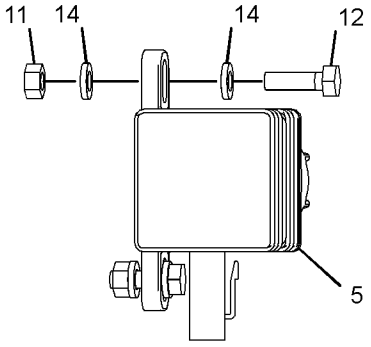

VIEW B-B

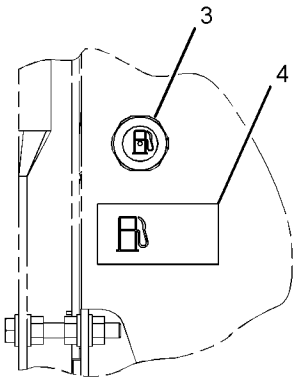

VIEW A-A

GRAPHIC #1 <END> g02723914

374-0830 PUMP GP-FUEL TRANSFER

S/N: CH91-UP

PART OF 374-0829 PUMP GP-FUEL TRANSFER

AN ATTACHMENT

SMCS-1256 **i05519911**

NOTE	REF NO	GRAPHIC REF	PART NUMBER	QTY	PART NAME 1 2 3 4 5 6 (PRODUCT LEVEL)	SEE PAGE
	1	1	**8T-9402**	1	CLAMP-HOSE	
	2	1	**175-4807**	1	PUMP & MOTOR GP (HYDRAULIC TANK)	
		1	**102-8802**	1	KIT-RECEPTACLE (2-PIN)	
					(INCLUDES RECEPTACLE AS & WEDGE)	
		1	**9W-0852**	2	PIN-CONNECTOR (14-GA TO 16-GA)	
	3	1	**207-2159**	1	ELBOW	
	4	1	**275-4904**	1	COUPLING GP	
		1	**267-2486**	1	COUPLING AS	
		1	**275-4905**	1	PLUG AS	
E	5	1	**120-9729**		HOSE (60-CM)	
E	6	1	**197-3800**		LOOM (18-CM)	

E - ORDER BY THE CENTIMETER

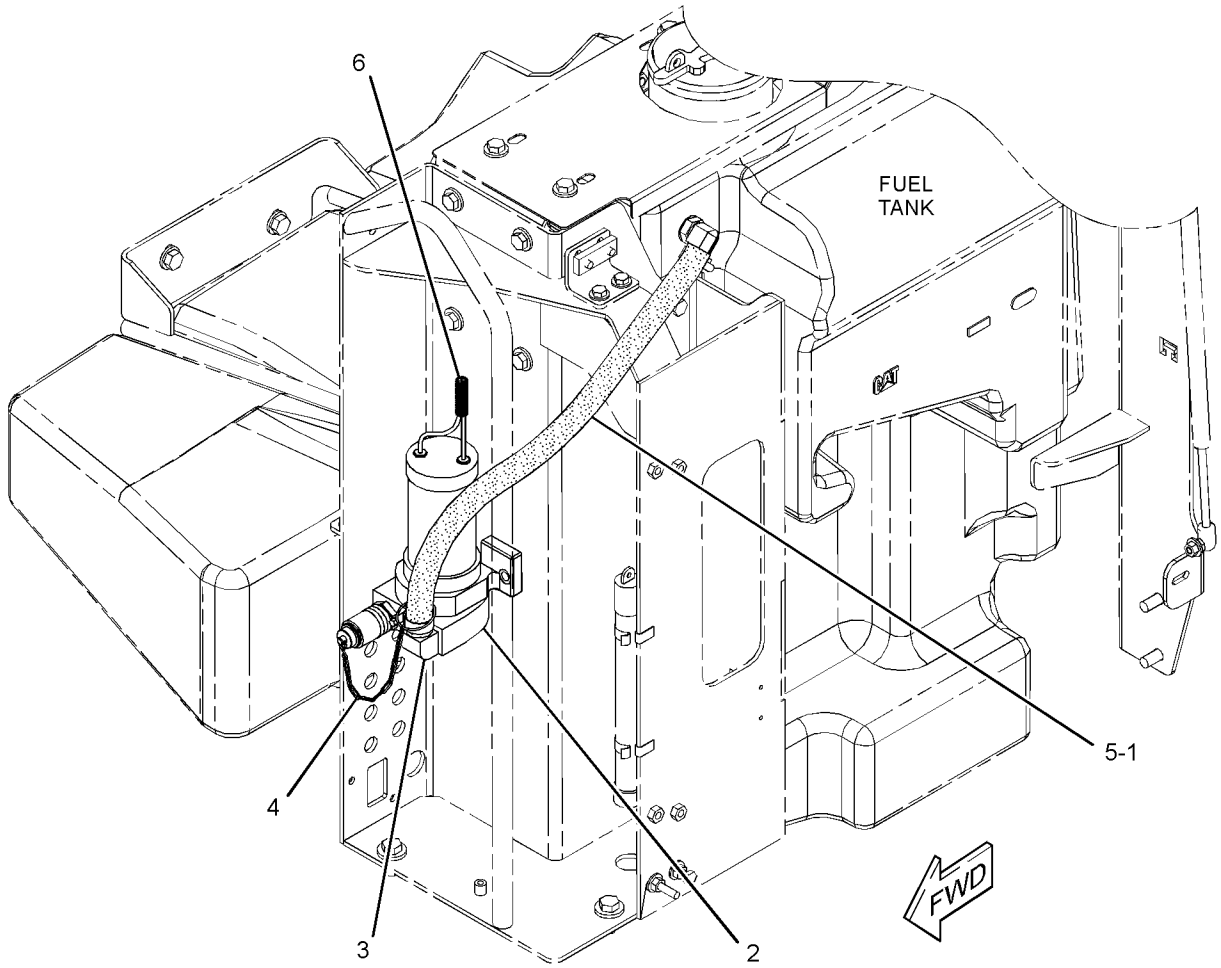

GRAPHIC #1 <END> g02723932

475-4069 PUMP GP-FUEL TRANSFER

S/N: CH91-UP

PART OF 453-8185, 473-2841, 517-3262 DISTRIBUTION AR

AN ATTACHMENT

SMCS-1256 **i06023314**

NOTE	PART NUMBER	QTY	PART NAME 1 2 3 4 5 6 (PRODUCT LEVEL)	SEE PAGE
Y	*267-2488*	1	HOSE GP-REFUELING	81
Y	*275-4903*	1	PUMP & MTG GP-FUEL TRANSFER (2-WAY, HIGH FLOW)	94
Y	**241-8368**	1	SWITCH GP-MAGNETIC (24-VOLT) (FUEL TRANSFER PUMP)	189
M	**8T-4138**	2	BOLT (M6X1X20-MM)	
M	**289-9555**	2	BOLT-SOCKET HEAD (M8X1.25X30-MM)	
	8T-9402	1	CLAMP-HOSE	
	275-4918	1	ELBOW	
	208-1658	1	FILM-INSTRUCTION (REFUELING)	
M	**5C-2890**	2	NUT (M6X1-THD)	
	2M-9780	1	SEAL-O-RING	
	196-5650	1	SWITCH AS (REFUELING PUMP RELAY)	
M	**197-6076**	1	NUT (M30X1-THD)	
	197-6082	1	BOOT	
	9X-8256	4	WASHER (6.6X12X2-MM THK)	
	8T-4224	2	WASHER-HARD (8.8X16X2-MM THK)	

M - METRIC PART
Y - SEPARATE ILLUSTRATION

<END>

394-9639 RAIL GP-FUEL

S/N: E7A1-UP
PART OF 446-6728 ENGINE AR-PRIMARY
ALSO AN ATTACHMENT

SMCS-1288 **i05489961**

NOTE	REF NO	GRAPHIC REF	PART NUMBER	QTY	PART NAME 1 2 3 4 5 6 (PRODUCT LEVEL)	SEE PAGE
M	1	1	**6I-0260**	3	BOLT (M8X1.25X25-MM)	
M	2	1	**099-6418**	1	NUT (M6X1-THD)	
	3	1	**206-1826**	2	BOLT	
Y	4	1	*370-5520*	1	LINES GP-FUEL INJECTION	92
	5	1	**375-0482**	4	CLAMP-PIPE	
	6	1	**375-0483**	2	INSERT-CLAMP	
	7	1	**375-2649**	1	RAIL GP-FUEL	
		1	**375-6988**	1	SENSOR (FUEL RAIL PRESSURE)	
		1	**398-6226**	1	VALVE (FUEL RAIL PRESSURE)	
	8	1	**393-2034**	1	LINE AS-FUEL	
	9	1	**393-2035**	1	LINE AS-FUEL	
Y	10	1	**394-0525**	1	LINES GP-FUEL INJECTION	93

M - METRIC PART
Y - SEPARATE ILLUSTRATION

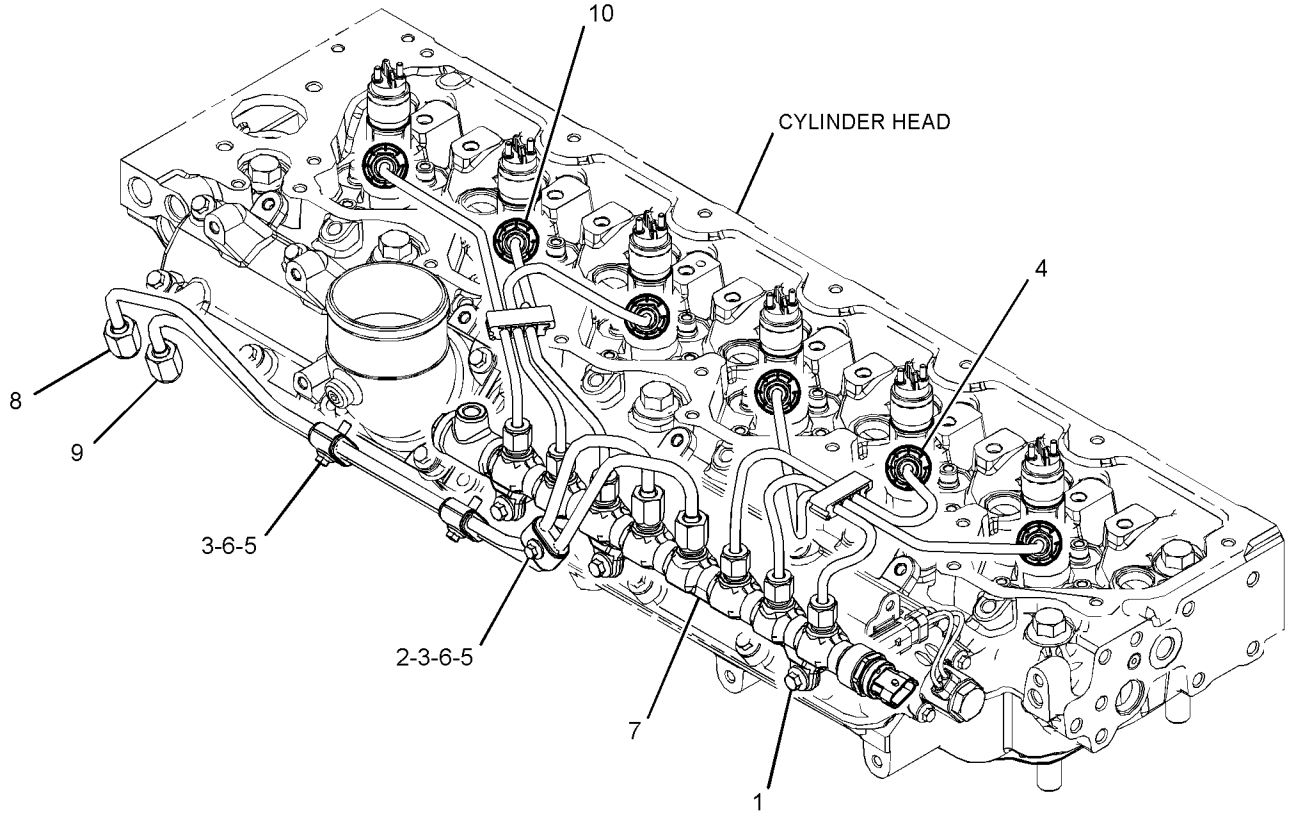

GRAPHIC #1 <END> g03380177

252-9828 TANK & MTG GP-FUEL

S/N: CH91-UP
PART OF 449-2824 CHASSIS AR
ALSO AN ATTACHMENT

SMCS-1273 **i06019918**

NOTE	REF NO	GRAPHIC REF	PART NUMBER	QTY	PART NAME 1 2 3 4 5 6 (PRODUCT LEVEL)	SEE PAGE
	1	1	**159-3727**	1	TUBE AS-DRAIN	
	2	1	**160-9192**	2	CLIP	
	3	1	**196-1767**	1	STRAP AS	
	4	1	**196-1770**	1	BRACKET AS	
Y	5	1	*252-9829*	1	TANK GP-FUEL	103
M	6	1	**8T-0389**	2	LOCKNUT (M10X1.5-THD)	
M	7	1	**8T-4172**	1	BOLT (M10X1.5X80-MM)	
M	8	1	**8T-4192**	2	BOLT (M12X1.75X25-MM)	
	9	1	**8T-4223**	2	WASHER-HARD (13.5X25.5X3-MM THK)	
M	10	1	**8T-6466**	1	BOLT (M10X1.5X60-MM)	

M - METRIC PART
Y - SEPARATE ILLUSTRATION

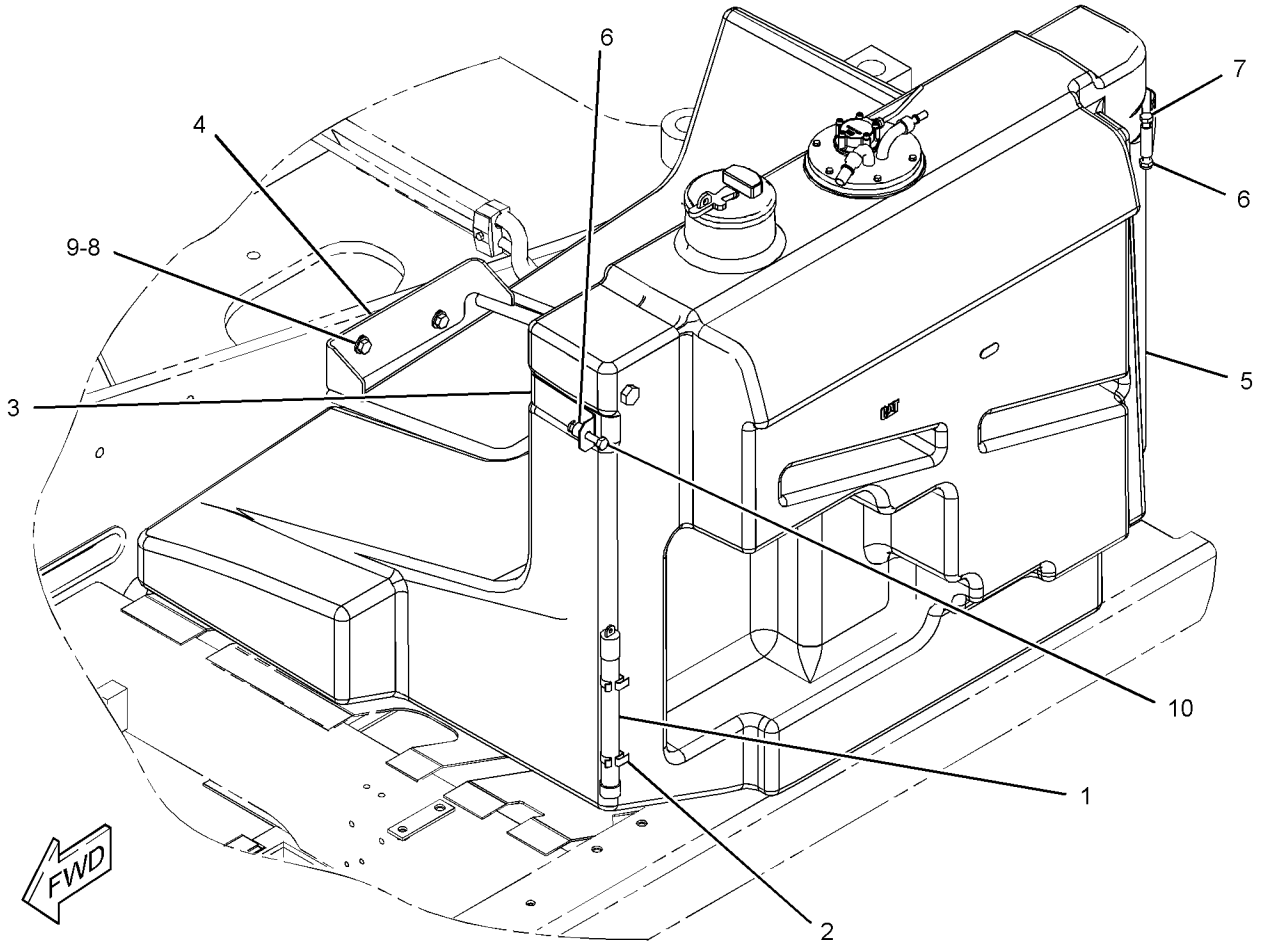

GRAPHIC #1 <END> g01325321

252-9829 TANK GP-FUEL

S/N: CH91-UP
385-LITER (102-US GAL)
PART OF 252-9828 TANK & MTG GP-FUEL
ALSO AN ATTACHMENT

SMCS-1273 **i06023402**

NOTE	REF NO	GRAPHIC REF	PART NUMBER	QTY	PART NAME 1 2 3 4 5 6 (PRODUCT LEVEL)	SEE PAGE
	1	1	**246-2641**	1	PADLOCK GP	
		1	**5P-8500**	1	KEY	
J	2	1	**7X-7700**	1	CAP AS-FUEL (LOCKABLE, VENTED)	
		1	**9X-8600**	1	SEAL-O-RING	
	3	1	**9P-7121**	1	STRAINER-FUEL	
	4	1	**101-4639**	1	PLUG AS-DRAIN (FUEL TANK)	
	5	1	**263-9293**	1	TANK AS-FUEL	
Y	6	1	**273-4840**	1	SENSOR & MTG GP-LIQUID LEVEL (FUEL)	181
	7	1	**132-3056**	1	SEAL-O-RING	
	8	1	*148-8410*	1	PLUG AS	
		1	**2M-9780**	1	SEAL-O-RING	
		1	**9S-4190**	1	PLUG-O-RING (7/8-14-THD)	
	9	1	**2M-9780**	1	SEAL-O-RING	
M	10	1	**8T-0289**	6	BOLT (M5X0.8X20-MM)	
	11	1	**8T-0328**	6	WASHER-HARD (5.5X10X1-MM THK)	
					AVAILABLE REPAIR KIT(S):	
J			**9X-2205**	1	KIT-CAP FILTER (FUEL TANK)	
					(INCLUDES FILTER AS, SCREW, GASKETS & VALVE)	

J - KIT MARKED J AVAILABLE FOR PART(S) MARKED J
M - METRIC PART
Y - SEPARATE ILLUSTRATION

252-9829 **TANK GP-FUEL (**contd.**)** **i06023402**

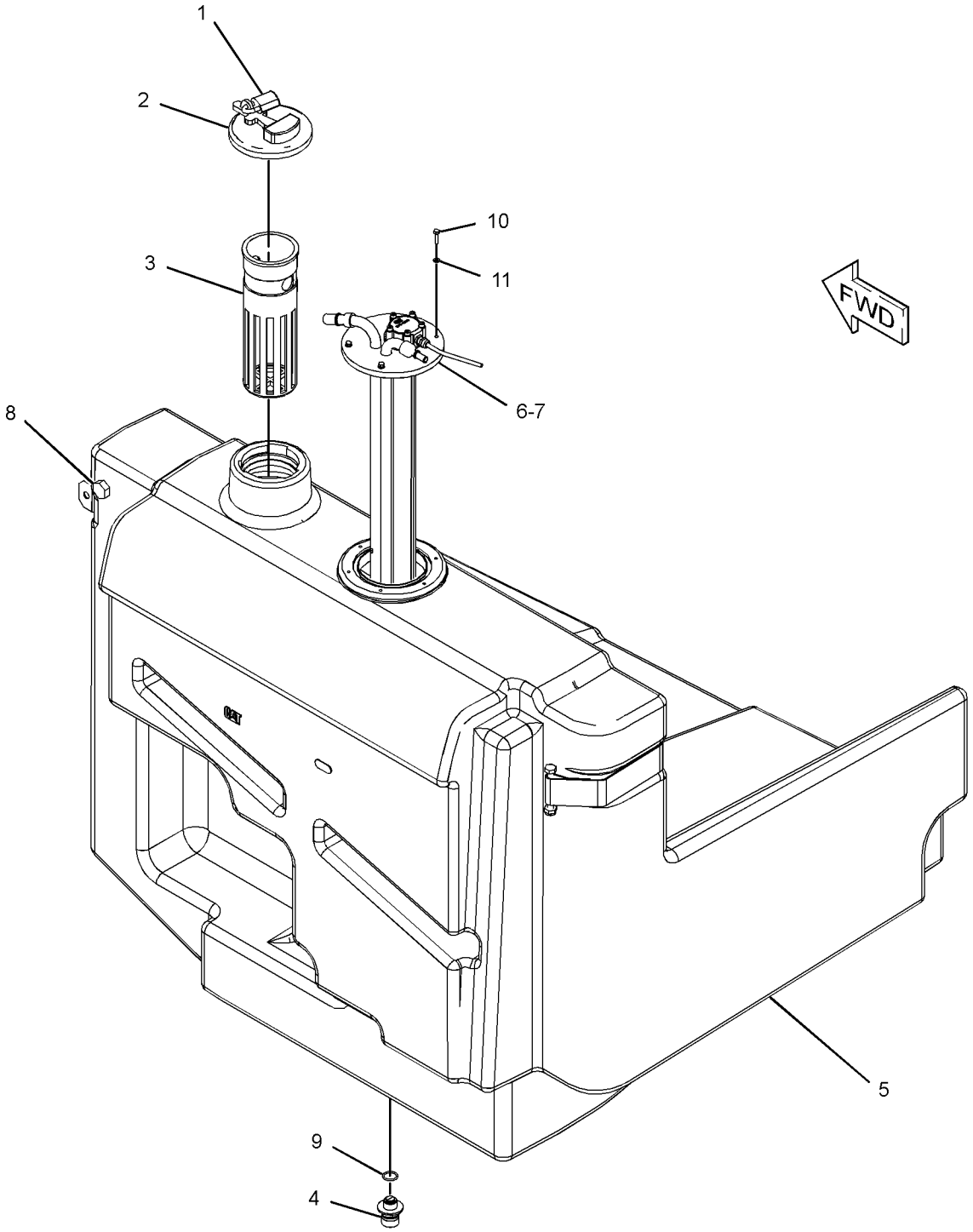

GRAPHIC #1 <END> g01325242

278-5284 ALARM GP-TRAVEL

S/N: CH91-UP

PART OF 453-8185, 473-2841, 517-3262 DISTRIBUTION AR

AN ATTACHMENT

SMCS-7429 **i06861630**

NOTE	REF NO	GRAPHIC REF	PART NUMBER	QTY	PART NAME 1 2 3 4 5 6 (PRODUCT LEVEL)	SEE PAGE
	1	1	**161-3128**	1	RELAY (24-VOLT) (TRAVEL ALARM)	
	2	1	**213-9100**	1	ALARM AS (BACKUP)	
		1	**102-8802**	1	KIT-RECEPTACLE (2-PIN)	
					(INCLUDES RECEPTACLE AS & WEDGE)	
		1	**8T-8729**	2	PIN-CONNECTOR (16-GA TO 20-GA)	
E		1	**9X-1813**		SLEEVE (29-CM)	
D		1	**5P-5623**		WIRE-ELECTRICAL (16-GA, BLACK) (0.8-M)	
	3	1	**3S-2093**	1	STRAP-CABLE	
M	4	1	**5C-7261**	2	NUT (M8X1.25-THD)	
	5	1	**5P-4116**	4	WASHER-HARD (8.8X20.5X2-MM THK)	
M	6	1	**8T-4189**	2	BOLT (M8X1.25X20-MM)	
	7	1	**9D-3768**	1	GROMMET	
	8	1	**124-7346**	4	LOCKWASHER	

D - ORDER BY THE METER
E - ORDER BY THE CENTIMETER
M - METRIC PART

278-5284 **ALARM GP-TRAVEL (**contd.**)** **i06861630**

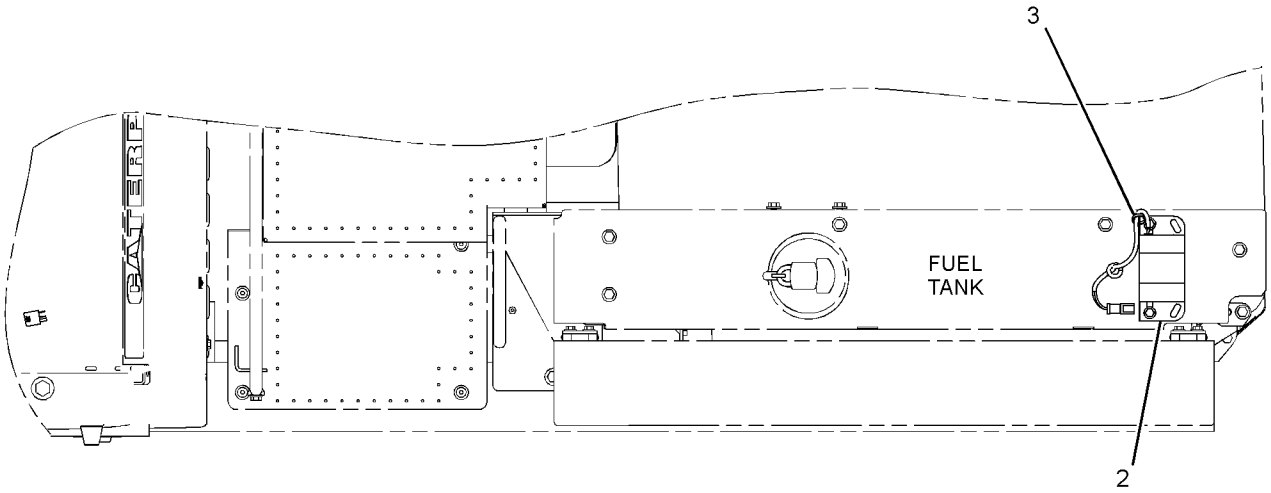

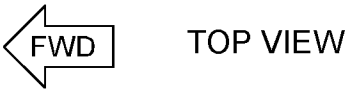

TOP VIEW

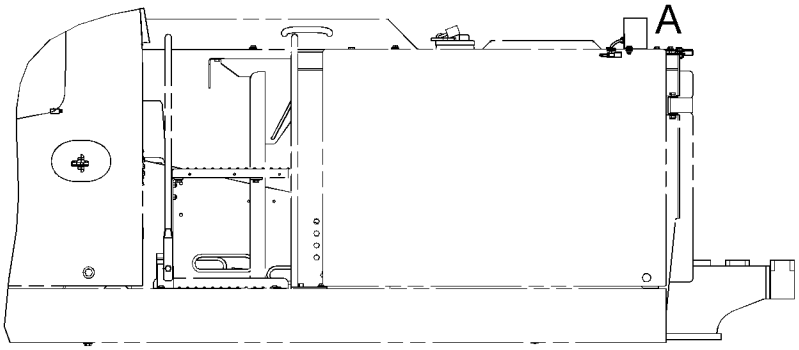

RIGHT SIDE VIEW

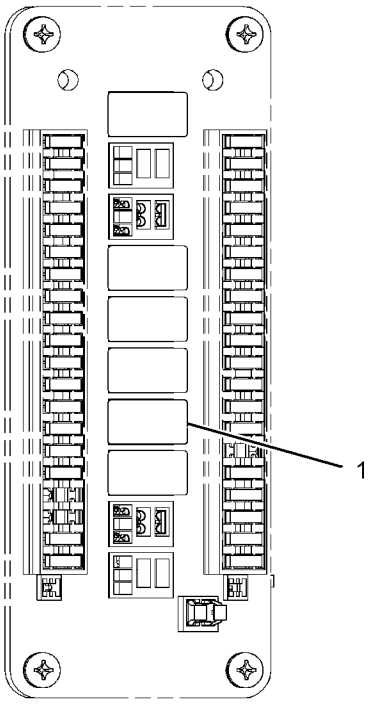

FRONT VIEW OF
FUSE/RELAY BASE

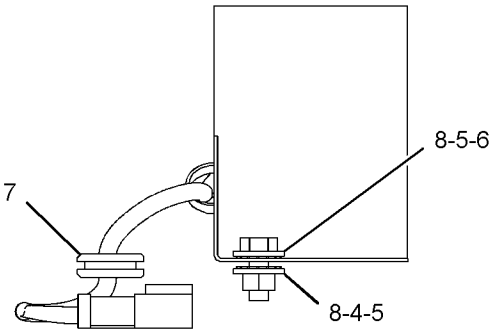

VIEW OF AREA A

GRAPHIC #1 <END> g03335320

377-0721 ALTERNATOR GP-CHARGING

S/N: E7A1-UP
24-VOLT,85 AMPERE
PART OF 446-6728 ENGINE AR-PRIMARY
ALSO AN ATTACHMENT

SMCS-1405 **i07730497**

NOTE	REF NO	GRAPHIC REF	PART NUMBER	QTY	PART NAME 1 2 3 4 5 6 (PRODUCT LEVEL)	SEE PAGE
M	1	1	**164-7468**	4	BOLT (M10X1.5X95-MM)	
R	2	1	**560-6109**	1	ALTERNATOR (24-VOLT, 85-AMPERE)	
	3	1	**321-8952**	1	BRACKET AS	
	3A	1	**161-9820**	2	PIN	
M	4	1	**111-0859**	4	BOLT (M10X1.5X35-MM)	

M - METRIC PART
R - REMANUFACTURED PART MAY BE AVAILABLE

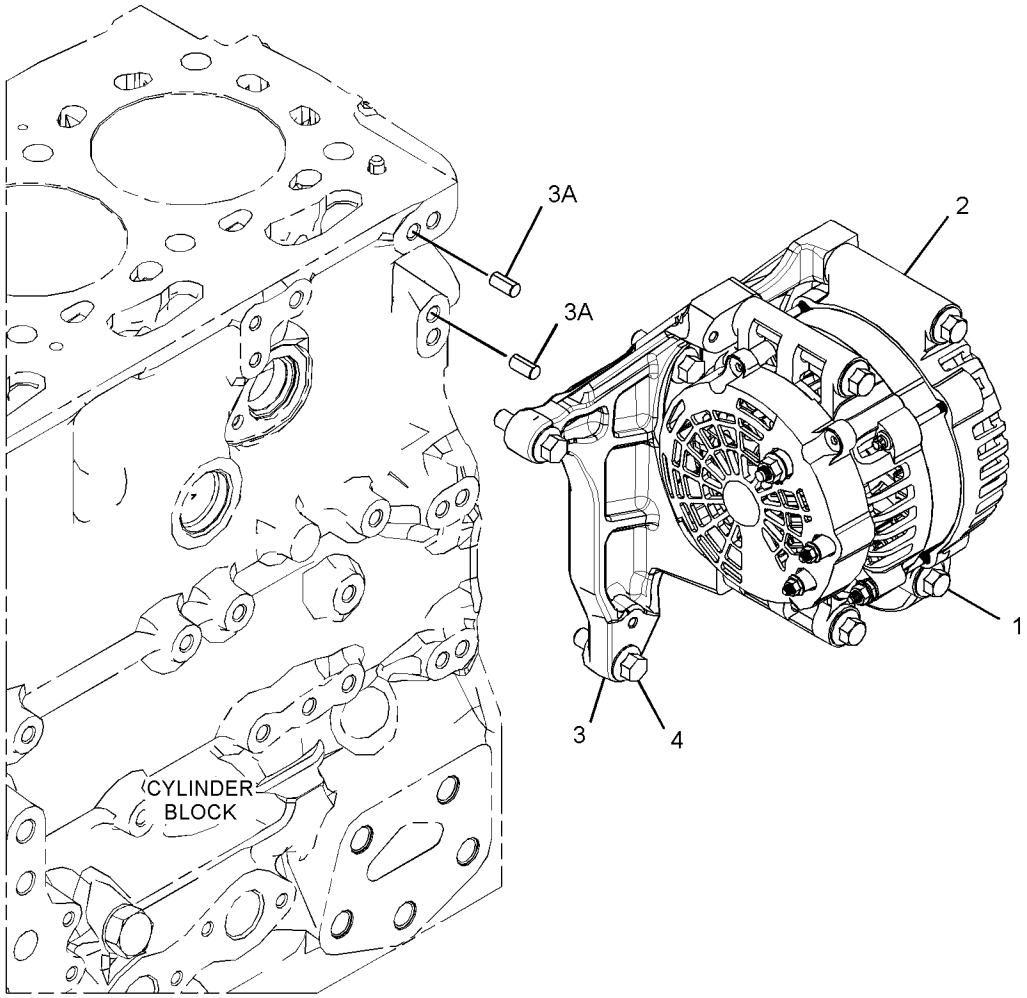

GRAPHIC #1 <END> g02416156

377-1843 BATTERY & WIRING GP

S/N: CH91-UP
PART OF 396-4423 ELECTRICAL AR
ALSO AN ATTACHMENT

SMCS-1401, 1402, 1408 **i05970850**

NOTE	REF NO	GRAPHIC REF	PART NUMBER	QTY	PART NAME 1 2 3 4 5 6 (PRODUCT LEVEL)	SEE PAGE
B	1	1,2	**3S-2093**	3	STRAP-CABLE	
	2	1,2	**8U-2738**	2	CAP-PROTECTION	
	3	2	**9X-3404**	2	BATTERY GP (12-VOLT, MAINTENANCE FREE, WET)	
Y	4	2	**118-3534**	1	SWITCH GP-MAGNETIC (24-VOLT) (START RELAY)	186
	5	1	**123-8838**	1	HOLDER AS-FUSE	
	6	1	**128-1041**	1	CABLE AS	
D		1	**6V-2369**		CABLE (4-GA, BLACK) (0.3-M)	
E		1	**114-8843**		SLEEVE-PLASTIC (10-CM)	
		1	**9G-4343**	1	TERMINAL-RING (4-GA, 1/4-IN SCREW)	
		1	**9G-4336**	1	TERMINAL-RING (4-GA, 3/8-IN SCREW)	
	7	1	**134-3355**	1	STRAP AS	
	8	1	**232-6315**	1	FUSE (80-AMPERE) (MAIN)	
Y	9	2	**241-8368**	1	SWITCH GP-MAGNETIC (24-VOLT) (ECM)	189
	10	2	**256-6393**	1	BRACKET	
	11	2	**261-4704**	1	CABLE AS	
		2	*201-4024*	1	TERMINAL AS	
D		2	**6V-2722**		TUBE-HEAT SHRINK (25.4-MM DIA) (0.1-M)	
		2	**1S-7252**	1	TERMINAL-CABLE (00-GA, 3/8-IN SCREW)	
		2	*206-6921*	1	TERMINAL AS	
D		2	**6V-2722**		TUBE-HEAT SHRINK (25.4-MM DIA) (0.1-M)	
		2	**030-1705**		TERMINAL-CABLE (00-GA, 5/16-IN SCREW)	
E		2	**159-8050**		CABLE (00-GA, BLACK) (26-CM)	
	12	2	**271-5306**	1	CABLE AS-BATTERY (NEGATIVE)	
		2	**7N-5274**	1	COVER AS-TERMINAL (BLACK)	
		2	**8L-8413**	1	STRAP-CABLE (WHITE)	
		2	**9G-8909**	1	COVER-TERMINAL (BLACK)	
		2	**3S-6050**	1	TERMINAL AS-BATTERY (NEGATIVE)	
		2	**1M-6119**	1	BOLT (5/16-18X1.375-IN)	
		2	**1M-6120**	1	NUT (5/16-18-THD)	
E		2	**159-8050**		CABLE (00-GA, BLACK) (48-CM)	
		2	*201-4024*	1	TERMINAL AS	
		2	**1S-7252**	1	TERMINAL-CABLE (00-GA, 3/8-IN SCREW)	
D		2	**6V-2722**		TUBE-HEAT SHRINK (25.4-MM DIA) (0.1-M)	
	13	1	**273-3623**	1	STRAP AS-GROUND	
	14	2	**328-0132**	1	CABLE AS	
		2	**8C-5918**	1	TERMINAL AS-BATTERY (NEGATIVE)	
		2	**1M-6119**	1	BOLT (5/16-18X1.375-IN)	
		2	**1M-6120**	1	NUT (5/16-18-THD)	
		2	**8T-9756**	1	TERMINAL AS-BATTERY (POSITIVE)	
		2	**1M-6119**		BOLT (5/16-18X1.375-IN)	
		2	**1M-6120**	1	NUT (5/16-18-THD)	
		2	**9G-0002**	1	COVER AS-TERMINAL (RED)	
		2	**9G-0005**	1	COVER AS-TERMINAL (BLACK)	
					(EACH COVER AS INCLUDES)	
		2	**8L-8413**	1	STRAP-CABLE (WHITE)	
E		2	**159-8049**	1	CABLE (00-GA, RED) (31-CM)	
Y	15	1	**377-1844**	1	HARNESS AS-ENGINE (ECM)	140

377-1843 **BATTERY & WIRING GP** (contd.) **i05970850**

NOTE	REF NO	GRAPHIC REF	PART NUMBER	QTY	PART NAME 1 2 3 4 5 6 (PRODUCT LEVEL)	SEE PAGE
	16	1	**377-1878**	1	BRACKET	
	17	1,2	**124-7346**	3	LOCKWASHER	
M	18	2	**159-7463**	1	BOLT (M10X1.5X240-MM)	
M	19	1	**177-0358**	6	BOLT-SOCKET HEAD (M4X0.7X55-MM)	
	20	1	**204-2281**	4	STRAP-CABLE	
	21	1	**293-9452**	4	MOUNTING-CABLE TIE	
	22	1	**3F-9556**	2	LOCKWASHER	
	23	1	**4P-8134**	1	CLIP (LADDER)	
M	24	1	**5C-2890**	1	NUT (M6X1-THD)	
M	25	1	**5C-7261**	1	NUT (M8X1.25-THD)	
M	26	1	**5C-9553**	3	BOLT (M6X1X16-MM)	
	27	1	**5P-4116**	1	WASHER-HARD (8.8X20.5X2-MM THK)	
	28	2	**5P-6264**	1	GROMMET	
Y	29	2	**7N-0718**	1	SWITCH GP-DISCONNECT (BATTERY)	185
	30	1	**8T-4121**	5	WASHER-HARD (11X21X2.5-MM THK)	
M	31	2	**8T-4133**	1	NUT (M10X1.5-THD)	
M	32	1	**8T-4137**	4	BOLT (M10X1.5X20-MM)	
M	33	1	**8T-4138**	1	BOLT (M6X1X20-MM)	
M	34	1	**8T-4190**	1	BOLT (M16X2X25-MM)	
	35	2	**8T-4226**	1	WASHER-PLATED (10.5X45X3-MM THK)	
M	36	2	**8T-4970**	4	BOLT (M6X1X14-MM)	
	37	1,2	**9X-8256**	8	WASHER (6.6X12X2-MM THK)	
	38	1	**9X-8257**	1	WASHER (17.5X30X3.5-MM THK)	

B - USE AS REQUIRED
D - ORDER BY THE METER
E - ORDER BY THE CENTIMETER
M - METRIC PART
Y - SEPARATE ILLUSTRATION

377-1843 **BATTERY & WIRING GP** (contd.) **i05970850**

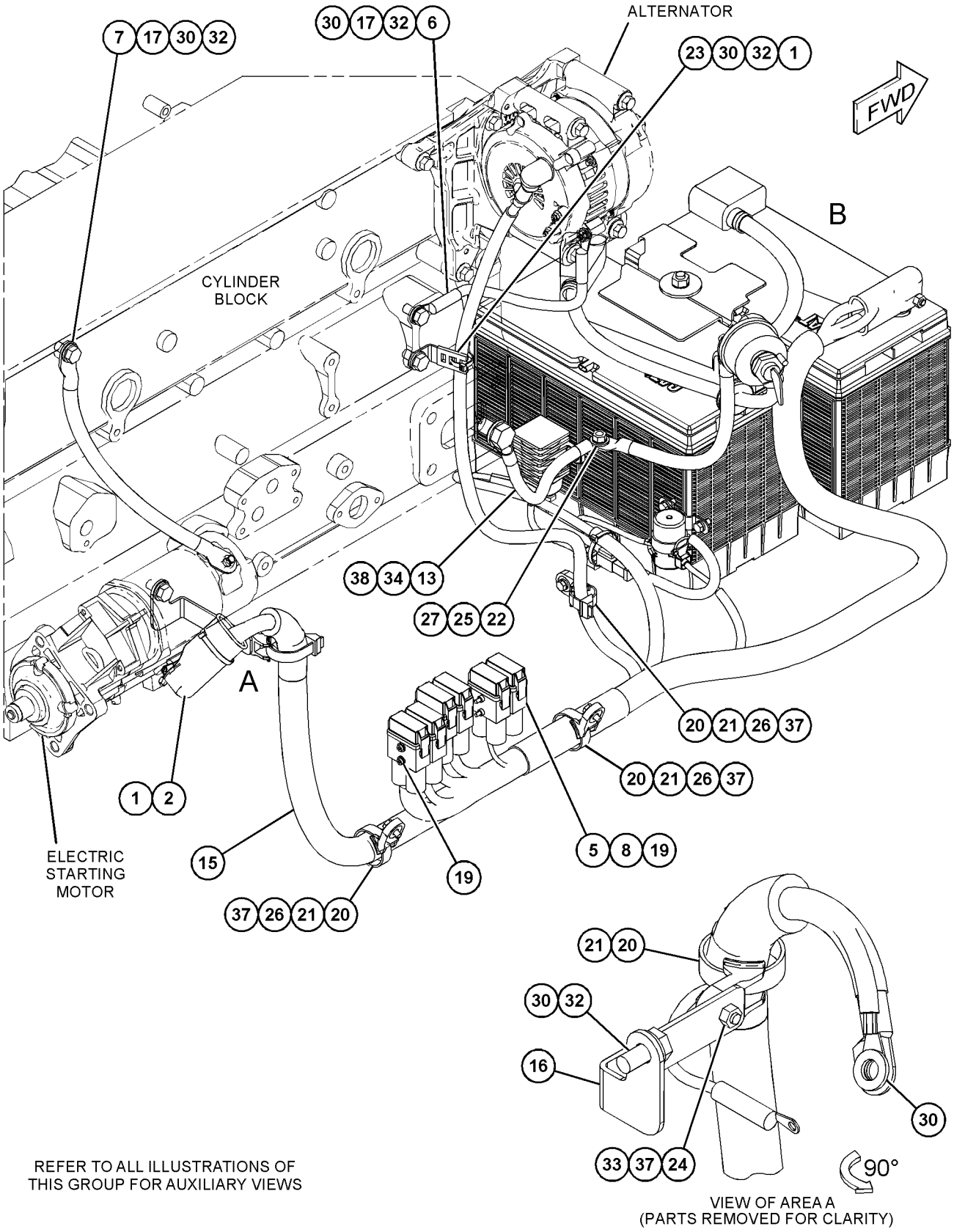

REFER TO ALL ILLUSTRATIONS OF THIS GROUP FOR AUXILIARY VIEWS

GRAPHIC #1 g03745408

377-1843 **BATTERY & WIRING GP** (contd.) **i05970850**

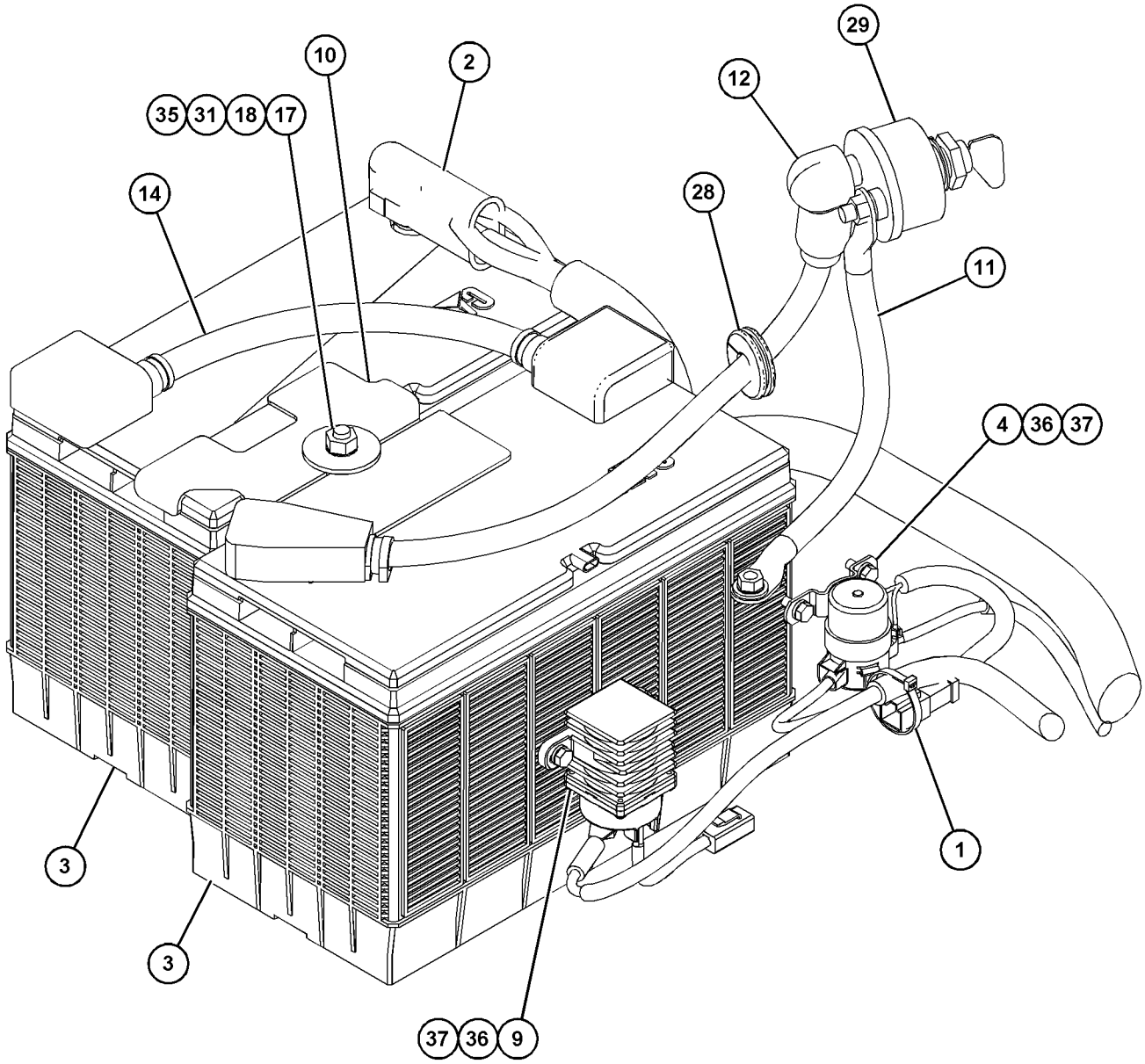

VIEW OF AREA B
(PARTS REMOVED FOR CLARITY)

GRAPHIC #2 <END> g03745410

453-7073 CONTROL & MTG GP-COMMUNICATION—PRODUCT LINK 522, CHINA

S/N: CH91-UP

PART OF 473-2841 DISTRIBUTION AR

AN ATTACHMENT

SMCS-7606 **i06017532**

NOTE	PART NUMBER	QTY	PART NAME 1 2 3 4 5 6 (PRODUCT LEVEL)	SEE PAGE
Y	*376-4616*	1	CONTROL GP-COMMUNICATION (PRODUCT LINK CELLULAR, CHINA)	115
Y	**359-4777**	1	HARNESS AS-CONTROL (PRODUCT LINK)	138
	346-9376	1	ANTENNA AS	
	355-1213	1	PLUG	
	361-1045	1	NUT-SPECIAL (5/8-18-THD)	
M	**5C-9553**	1	BOLT (M6X1X16-MM)	
M	**7X-2533**	3	BOLT (M6X1X35-MM)	
M	**8C-8451**	1	BOLT (M6X1X40-MM)	
M	**8T-4136**	2	BOLT (M10X1.5X25-MM)	
	364-2797	1	BRACKET	
	364-2788	1	BRACKET AS	
M	**8T-3490**	2	NUT-WELD (M10X1.5-THD)	
	359-4778	1	CABLE AS-COMMUNICATION	
E	**8C-5064**		CONDUIT-FLEXIBLE (17.75-MM ID, SPLIT) (20-CM)	
	307-0047	1	FILM-INFORMATION (PRODUCT LINK, READ OMM)	
			(INSIDE CAB ON RH WINDOW ABOVE WARNING FILM)	
	260-7653	1	FILM-WARNING (EXPLOSION HAZARD, PRODUCT LINK)	
			(INSIDE CAB ON RH WINDOW TO BE ATTACHED TO WARNING FILMS)	
	9X-9896	8	MOUNT (ISOLATION)	
	293-9452	1	MOUNTING-CABLE TIE	
	8C-5608	4	SPACER (6.5X9.5X25.4-MM THK)	
B	**3S-2093**	16	STRAP-CABLE	
	204-2281	1	STRAP-CABLE	
	9X-6165	5	WASHER (6.5X22X2.5-MM THK)	
	9X-8256	1	WASHER (6.6X12X2-MM THK)	
	8T-4121	2	WASHER-HARD (11X21X2.5-MM THK)	

B - USE AS REQUIRED
E - ORDER BY THE CENTIMETER
M - METRIC PART
Y - SEPARATE ILLUSTRATION

<END>

337-5750 CONTROL & MTG GP-MACHINE

S/N: CH91-UP
PART OF 396-4423 ELECTRICAL AR
ALSO AN ATTACHMENT

SMCS-1931, 7600 **i05867056**

NOTE	REF NO	GRAPHIC REF	PART NUMBER	QTY	PART NAME 1 2 3 4 5 6 (PRODUCT LEVEL)	SEE PAGE
	1	1	**6I-1418**	4	SPACER (8.2X12.7X28.7-MM THK)	
	2	1	**155-0576**	8	MOUNT-ISOLATION	
	3	1	**337-5794**	1	PLATE AS	
Y	4	1	*377-1913*	1	ELECTRONICS GP-MACHINE	126
	5	1	**7X-0579**	8	WASHER-HARD (8.8X25.5X2-MM THK)	
M	6	1	**7X-0818**	4	BOLT (M8X1.25X45-MM)	
M	7	1	**7X-2619**	1	BOLT (M6X1X10-MM)	
	8	1	**8T-4121**	2	WASHER-HARD (11X21X2.5-MM THK)	
M	9	1	**8T-4136**	2	BOLT (M10X1.5X25-MM)	
	10	1	**9X-8256**	1	WASHER (6.6X12X2-MM THK)	

M - METRIC PART
Y - SEPARATE ILLUSTRATION

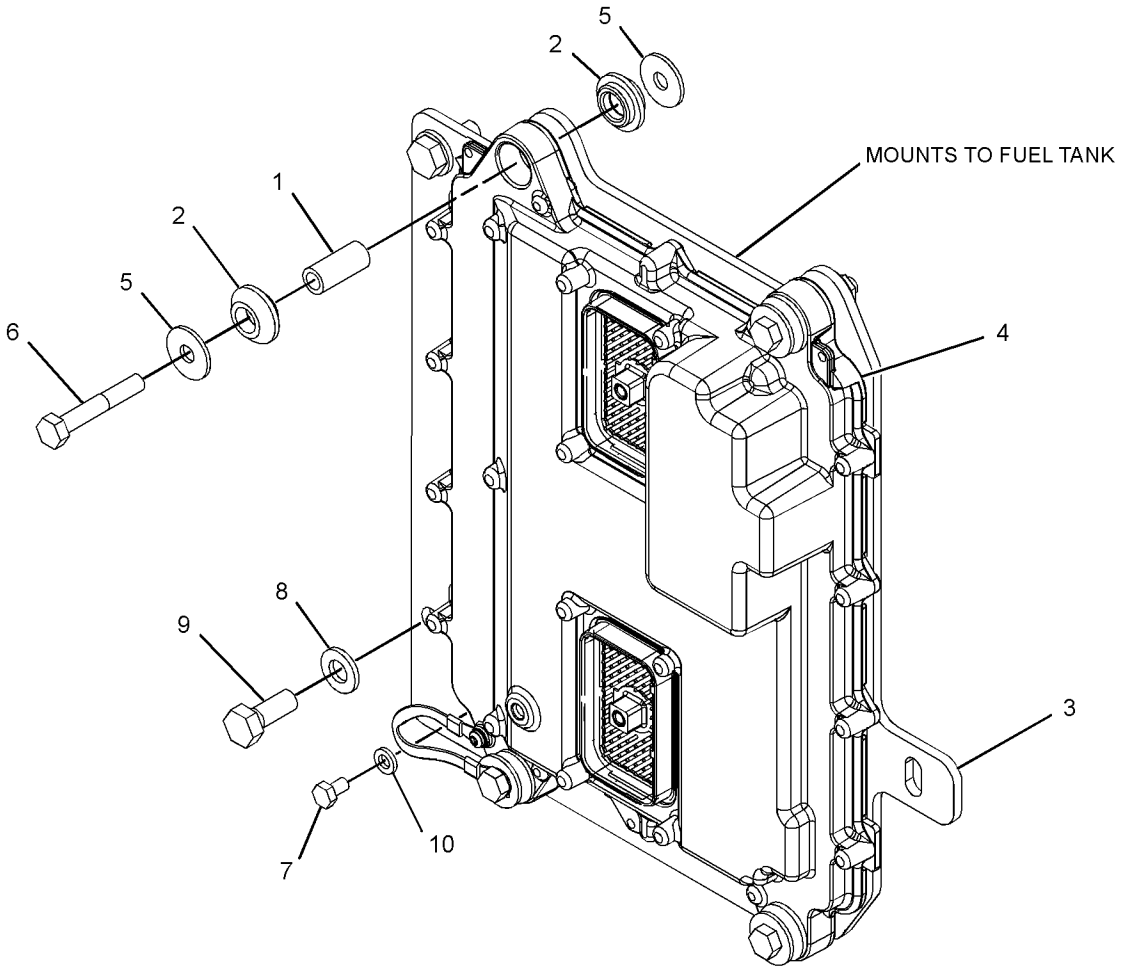

GRAPHIC #1 <END> g03401843

337-5819 CONTROL & MTG GP-MACHINE

S/N: CH91-UP
PART OF 337-5818 CONTROL AR-MACHINE
AN ATTACHMENT

SMCS-1931, 7600 **i05526129**

NOTE	REF NO	GRAPHIC REF	PART NUMBER	QTY	PART NAME 1 2 3 4 5 6 (PRODUCT LEVEL)	SEE PAGE
	1	1	**6I-1418**	4	SPACER (8.2X12.7X28.7-MM THK)	
	2	1	**155-0576**	8	MOUNT-ISOLATION	
Y	3	1	*337-5847*	1	ELECTRONICS GP-MACHINE	125
	4	1	**7X-0579**	8	WASHER-HARD (8.8X25.5X2-MM THK)	
M	5	1	**7X-0818**	4	BOLT (M8X1.25X45-MM)	

M - METRIC PART
Y - SEPARATE ILLUSTRATION

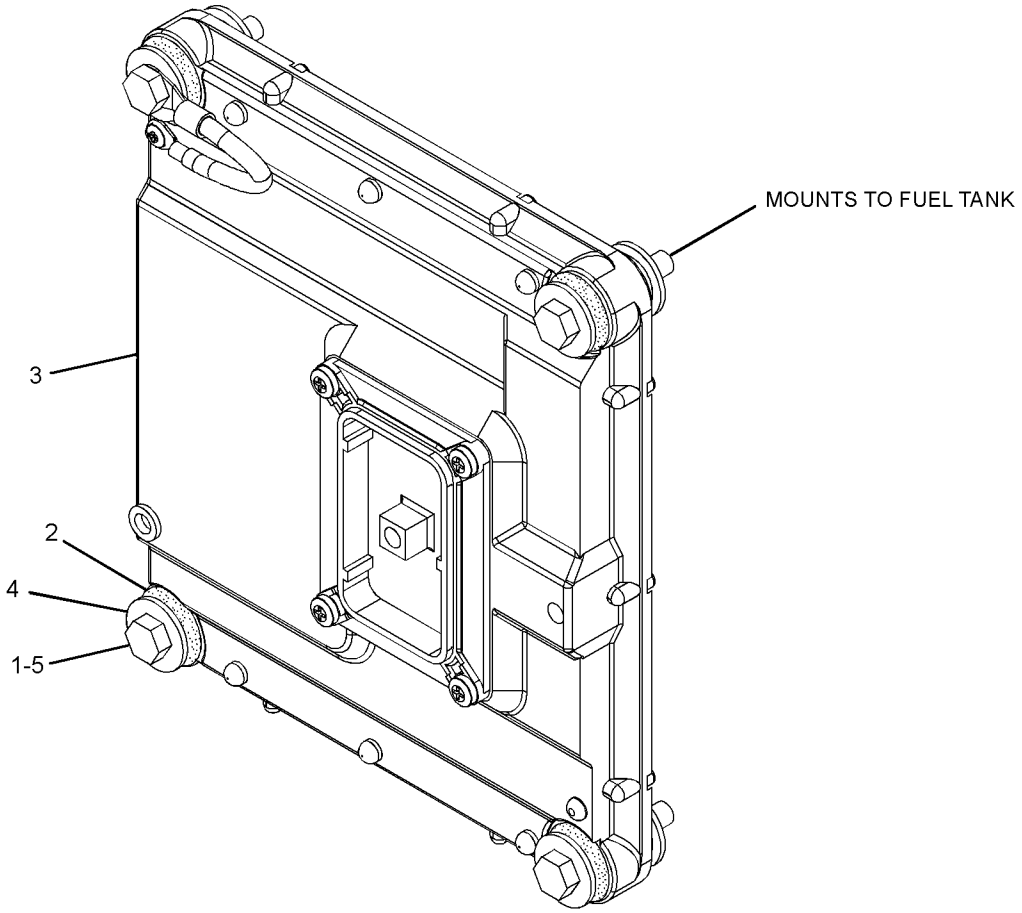

GRAPHIC #1 <END> g02416796

337-5818 CONTROL AR-MACHINE

S/N: CH91-UP
AN ATTACHMENT

SMCS-1000, 7000 **i05525170**

NOTE	PART NUMBER	QTY	PART NAME 1 2 3 4 5 6 (PRODUCT LEVEL)	SEE PAGE
Y	*337-5819*	1	CONTROL & MTG GP-MACHINE (VALVE)	114
Y	*337-5786*	1	WIRING GP-ELECTRONIC CONTROL	210

Y - SEPARATE ILLUSTRATION

<END>

376-4616 CONTROL GP-COMMUNICATION—PRODUCT LINK CELLULAR, CHINA

S/N: CH91-UP
PART OF 453-7073 CONTROL & MTG GP-COMMUNICATION
AN ATTACHMENT

SMCS-7606, 7610, 7620 **i06152124**

NOTE	PART NUMBER	QTY	PART NAME 1 2 3 4 5 6 (PRODUCT LEVEL)	SEE PAGE
Y	**372-4531**	1	CONTROL GP-UNPROGRAMMED (PRODUCT LINK 522, CHINA)	122
	458-6572	1	SOFTWARE GP-MONITOR (PRODUCT LINK 522)	

Y - SEPARATE ILLUSTRATION

<END>

377-1940 CONTROL GP-COMMUNICATION—PRODUCT LINK 321SR

S/N: CH91-UP

AN ATTACHMENT

SMCS-7606, 7610, 7620 **i05915980**

NOTE	REF NO	GRAPHIC REF	PART NUMBER	QTY	PART NAME 1 2 3 4 5 6 (PRODUCT LEVEL)	SEE PAGE
B	1	1	**3S-2093**	17	STRAP-CABLE	
	2	1	**9X-9896**	8	MOUNT (ISOLATION)	
Y	3	1	*239-9954*	1	CONTROL GP-UNPROGRAMMED (PRODUCT LINK 300)	120
	4	1	**260-7652**	1	FILM-WARNING (PRODUCT LINK 300, U.S.)	
	5	1	**260-7653**	1	FILM-WARNING (EXPLOSION HAZARD, PRODUCT LINK)	
	6	1	**307-0047**	1	FILM-INFORMATION (PRODUCT LINK, READ OMM)	
Y	7	1	**336-3545**	1	RADIO GP-COMMUNICATION (PRODUCT LINK 121SR)	178
	8	1	**351-8485**	1	ANTENNA AS	
		1	**301-0589**	1	ANTENNA (FLEXIBLE)	
		1	**355-0598**	1	NUT-SPECIAL	
	9	1	**364-2788**	1	BRACKET AS	
M		1	**8T-3490**	2	NUT-WELD (M10X1.5-THD)	
	10	1	**364-2797**	1	BRACKET	
	11	1	**377-1866**	2	PLATE	
	12	1	**377-1875**	1	CABLE AS-ANTENNA	
Y	13	1	**377-1941**	1	HARNESS AS-CONTROL	139
	14	1	**204-2281**	1	STRAP-CABLE	
	15	1	**293-9452**	1	MOUNTING-CABLE TIE	
M	16	1	**5C-9553**	1	BOLT (M6X1X16-MM)	
M	17	1	**7X-2533**	3	BOLT (M6X1X35-MM)	
	18	1	**8C-5608**	4	SPACER (6.5X9.5X25.4-MM THK)	
M	19	1	**8C-8451**	1	BOLT (M6X1X40-MM)	
	20	1	**8T-4121**	2	WASHER-HARD (11X21X2.5-MM THK)	
M	21	1	**8T-4136**	2	BOLT (M10X1.5X25-MM)	
M	22	1	**8T-4181**	4	BOLT (M6X1X20-MM)	
M	23	1	**8T-4189**	2	BOLT (M8X1.25X20-MM)	
	24	1	**8T-4224**	2	WASHER-HARD (8.8X16X2-MM THK)	
	25	1	**9X-6165**	5	WASHER (6.5X22X2.5-MM THK)	
	26	1	**9X-8256**	5	WASHER (6.6X12X2-MM THK)	
D	27	1	**8T-3425**		CHANNEL-TRIM (0.06-M)	
D	27A	1	**8T-3425**		CHANNEL-TRIM (0.05-M)	

B - USE AS REQUIRED
D - ORDER BY THE METER
M - METRIC PART
Y - SEPARATE ILLUSTRATION

377-1940 **CONTROL GP-COMMUNICATION (**contd.**)** **i05915980**

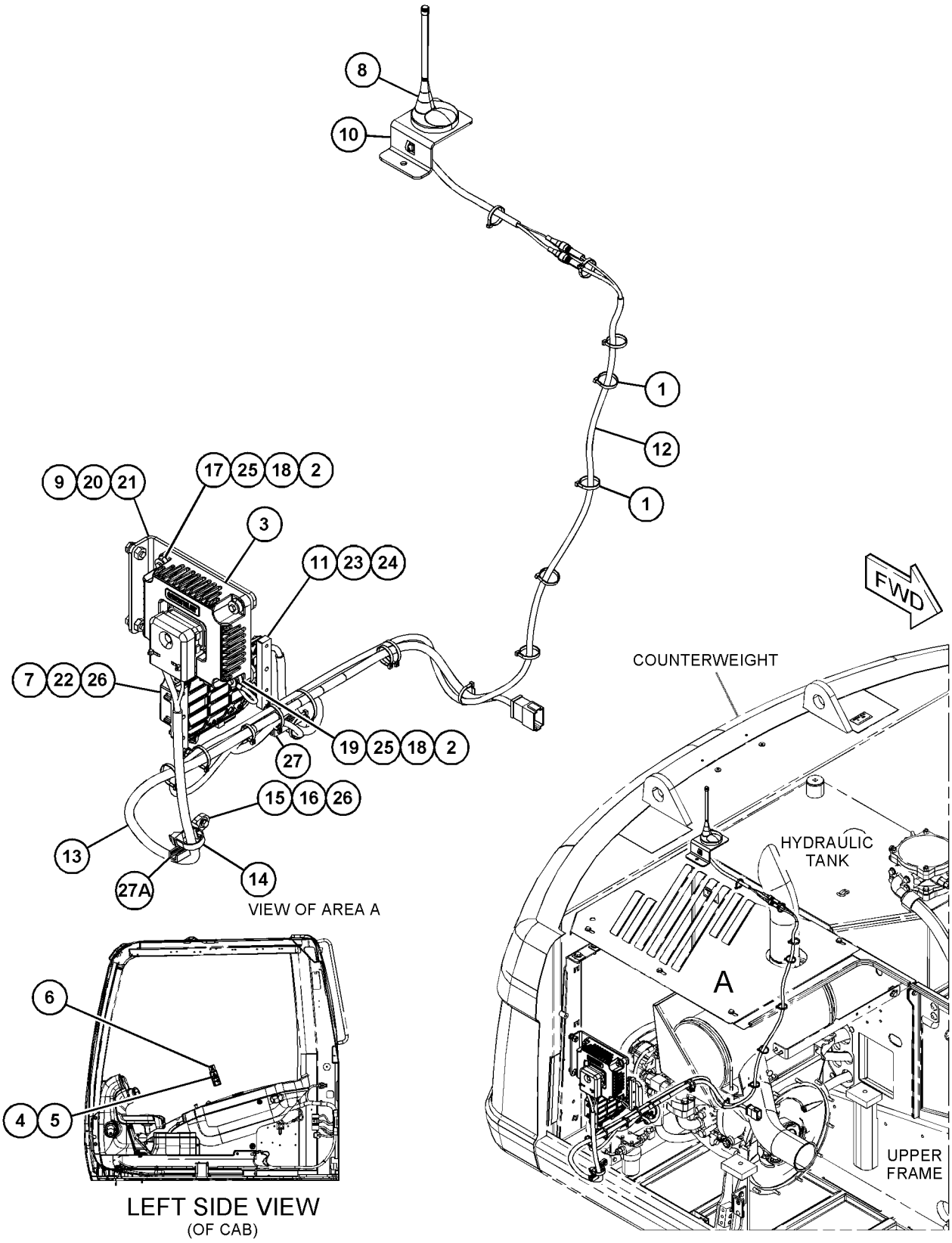

GRAPHIC #1 <END> g03579556

440-2105 CONTROL GP-ELECTRONIC—PL641E CELLULAR*R

S/N: CH91-UP

PART OF 480-3535 CONTROL GP-ELECTRONIC, 498-5766 INSTALLATION GP-COMMUNICATION AN ATTACHMENT

SMCS-1901 **i07703985**

NOTE	REF NO	GRAPHIC REF	PART NUMBER	QTY	PART NAME 1 2 3 4 5 6 (PRODUCT LEVEL)	SEE PAGE
F			**568-5111**	1	SOFTWARE GP-MONITOR (CELLULAR)	

F - NOT SHOWN

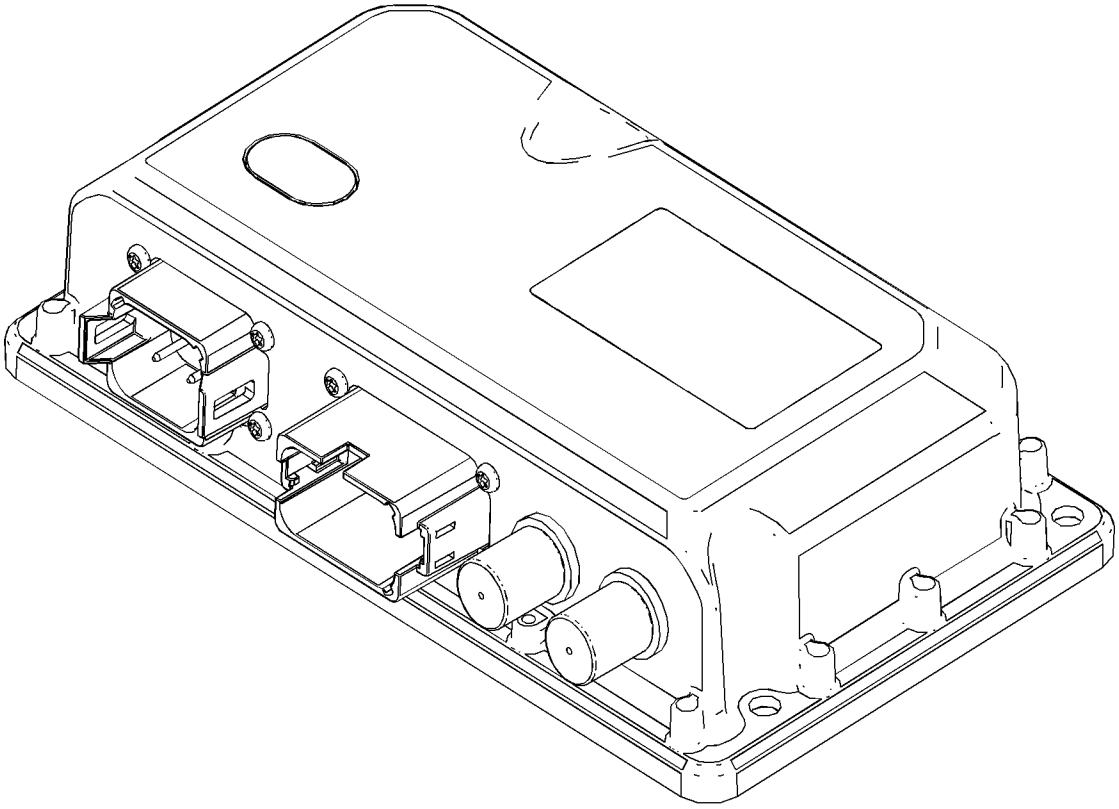

GRAPHIC #1 <END> g06131293

480-3535 CONTROL GP-ELECTRONIC*R

S/N: CH91-UP

PART OF 498-5767 INSTALLATION GP-COMMUNICATION

AN ATTACHMENT

SMCS-1901 **i07766978**

NOTE	REF NO	GRAPHIC REF	PART NUMBER	QTY	PART NAME 1 2 3 4 5 6 (PRODUCT LEVEL)	SEE PAGE
YR	1	1	**440-2105**	1	CONTROL GP-ELECTRONIC (PRODUCT LINK ELITE 641 CELLULAR)	118
	2	1	**483-3530**	1	FILM-IDENTIFICATION (LABEL)	

R - REMANUFACTURED PART MAY BE AVAILABLE
Y - SEPARATE ILLUSTRATION

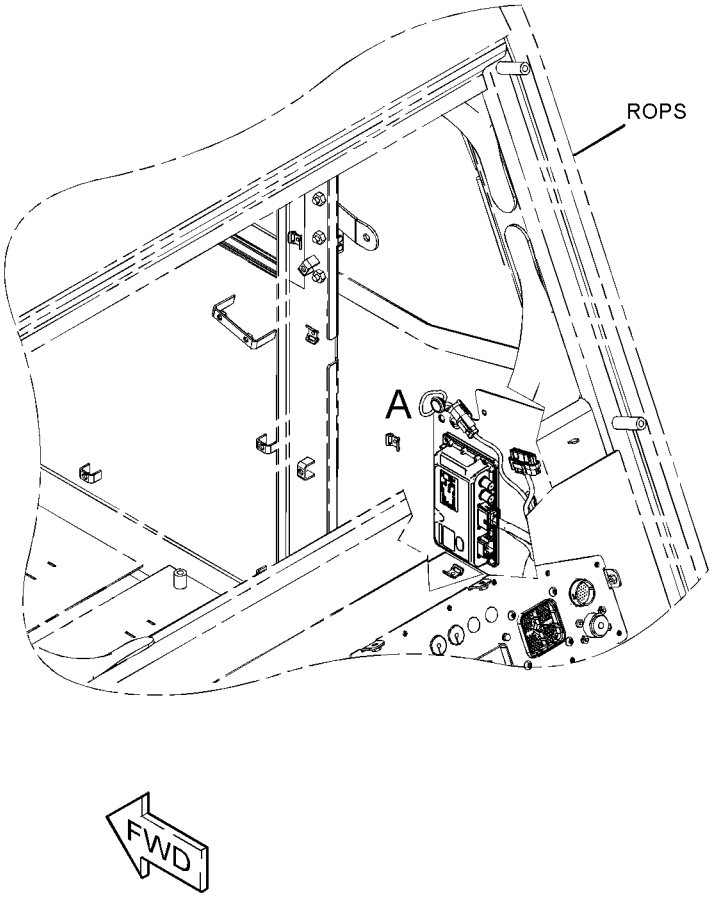

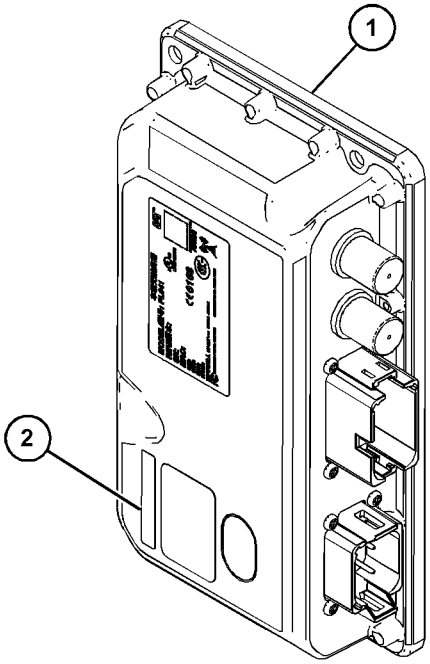

VIEW OF AREA A

GRAPHIC #1 <END> g06032419

239-9954 CONTROL GP-UNPROGRAMMED

S/N: CH91-UP

PART OF 377-1940 CONTROL GP-COMMUNICATION

AN ATTACHMENT

SMCS-7610 **i05269512**

NOTE	REF NO	GRAPHIC REF	PART NUMBER	QTY	PART NAME 1 2 3 4 5 6 (PRODUCT LEVEL)	SEE PAGE
	1	1	**285-1133**	1	CONTROL GP-UNPROGRAMMED (PRODUCT LINK 300)	
	1A	1	**7X-6315**	1	STRAP AS-GROUND	
	1B	1	**126-7574**	1	SCREW-PAN HEAD (8-32X9.52-MM)	
	1C	1	**134-4126**	1	WASHER (4.52X8.28X0.76-MM THK)	

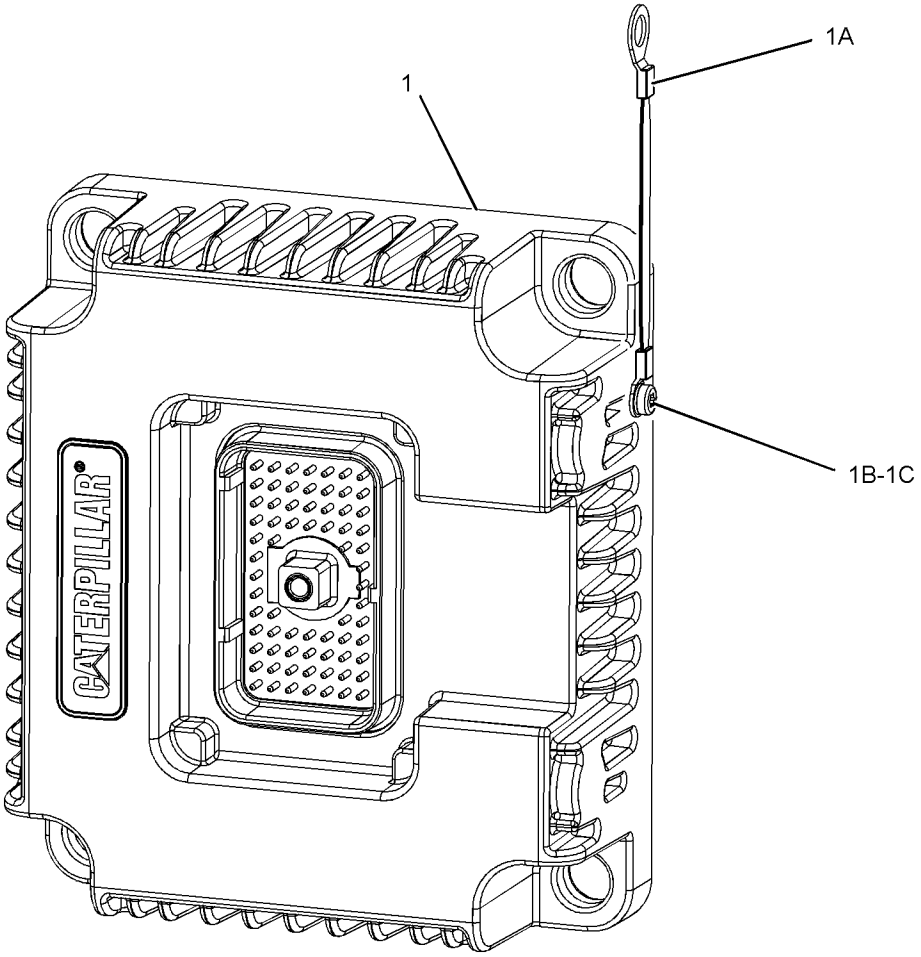

GRAPHIC #1 <END> g01377625

351-8490 CONTROL GP-UNPROGRAMMED—PRODUCT LINK 522

S/N: CH91-UP

PART OF 359-4775 INSTALLATION GP-COMMUNICATION

AN ATTACHMENT

SMCS-7610 **i06218735**

NOTE	REF NO	GRAPHIC REF	PART NUMBER	QTY	PART NAME 1 2 3 4 5 6 (PRODUCT LEVEL)	SEE PAGE
	1	1	**346-7763**	1	COVER AS	
	2	1	**351-8488**	1	CARD-MEMORY (SUBSCRIBER IDENTITY MODULE)	
	3	1	**7X-6315**	1	STRAP AS-GROUND	
D		1	**5P-6006**		TUBE-HEAT SHRINK (9.52-MM DIA) (0.1-M)	
		1	**2L-8078**	1	TERMINAL-RING (14-GA TO 16-GA, 5/16-IN SCREW)	
		1	**139-6911**	1	RING-TERMINAL	
M	4	1	**342-9022**	4	SCREW-PAN HEAD (M2.5X0.45X8-MM)	
M	5	1	**342-9290**	1	SCREW-PAN HEAD (M4X0.7X10-MM)	
	6	1	**134-4126**	1	WASHER (4.52X8.28X0.76-MM THK)	
F			**476-9318**	1	SOFTWARE GP-MONITOR	

D - ORDER BY THE METER
F - NOT SHOWN
M - METRIC PART

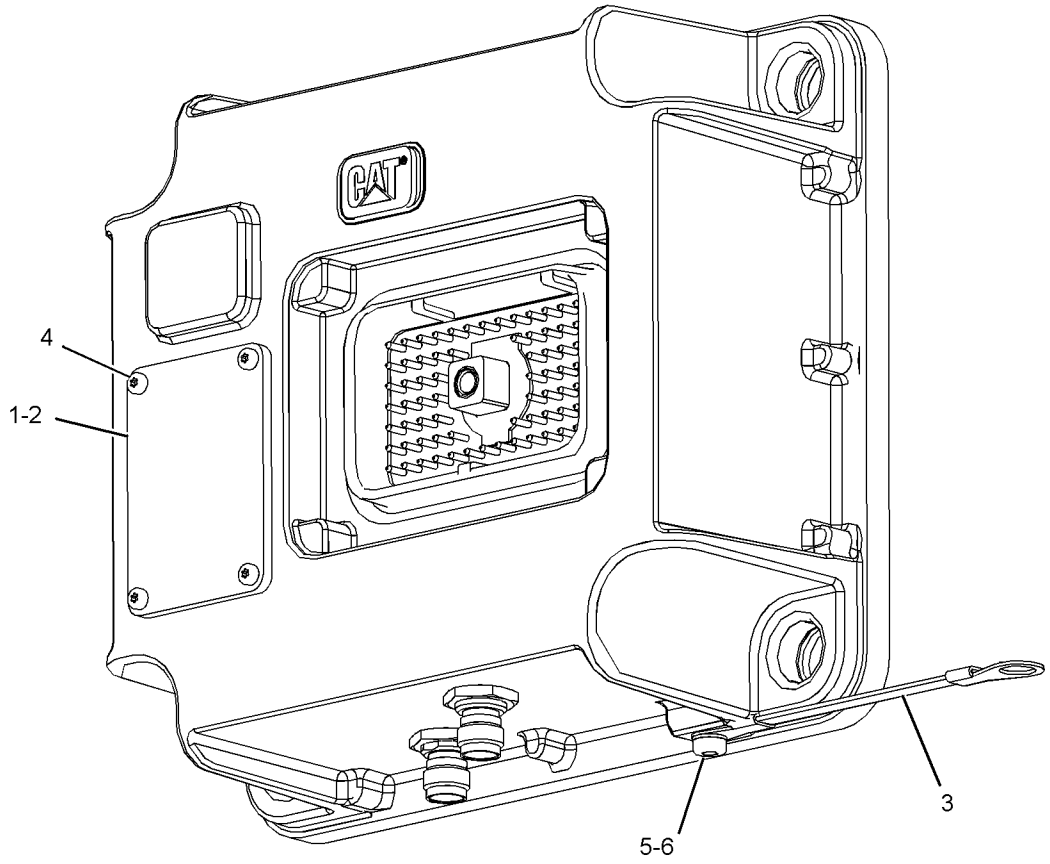

GRAPHIC #1 <END> g02330133

372-4531 CONTROL GP-UNPROGRAMMED—PRODUCT LINK 522

S/N: CH91-UP
PART OF 376-4616 CONTROL GP-COMMUNICATION
AN ATTACHMENT

SMCS-7610 **i06144075**

NOTE	REF NO	GRAPHIC REF	PART NUMBER	QTY	PART NAME 1 2 3 4 5 6 (PRODUCT LEVEL)	SEE PAGE
	1	1	**346-7763**	1	COVER AS	
	2	1	**372-4532**	1	CARD-MEMORY (SUBSCRIBER IDENTITY MODULE)	
	3	1	**7X-6315**	1	STRAP AS-GROUND	
M	4	1	**342-9022**	4	SCREW-PAN HEAD (M2.5X0.45X8-MM)	
M	5	1	**342-9290**	1	SCREW-PAN HEAD (M4X0.7X10-MM)	
	6	1	**134-4126**	1	WASHER (4.52X8.28X0.76-MM THK)	
	7	1	**276-4053**	1	FILM-IDENTIFICATION (CAT)	
F			**476-9318**	1	SOFTWARE GP-MONITOR (PRODUCT LINK 522)	

F - NOT SHOWN
M - METRIC PART

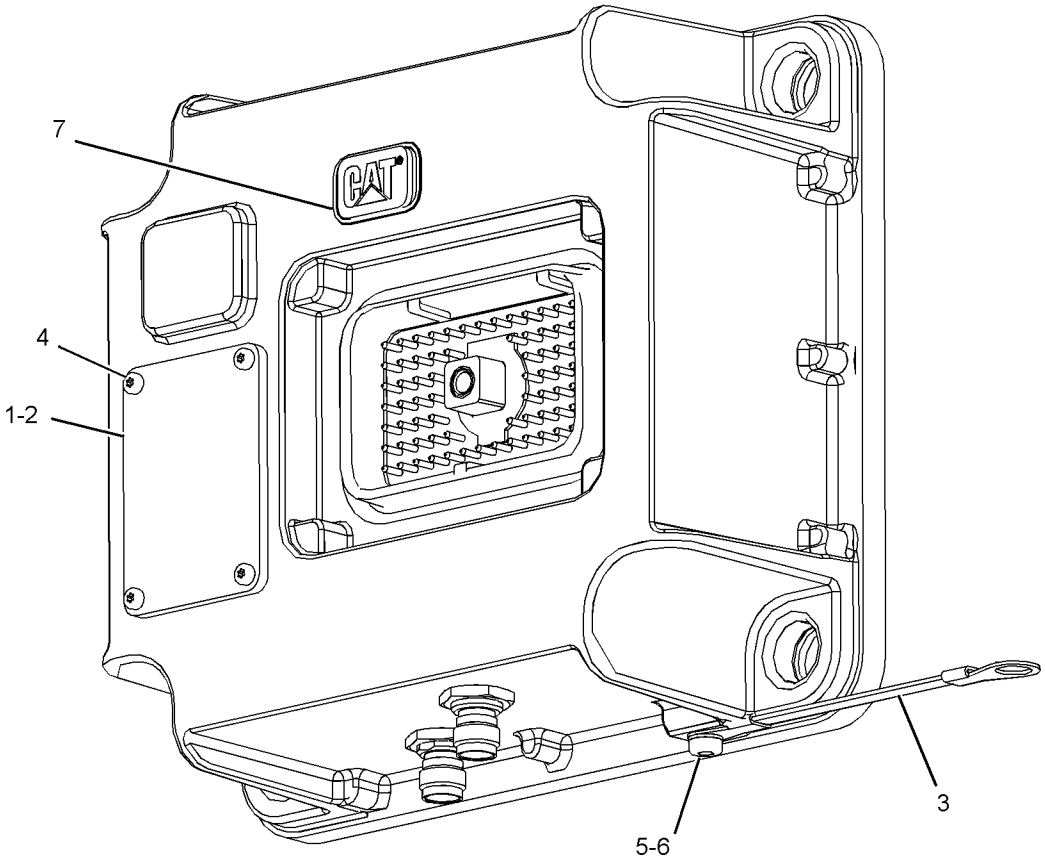

GRAPHIC #1 <END> g03009457

442-7199 CONTROL GP-UNPROGRAMMED—PL631 SATELLITE*R

S/N: CH91-UP

PART OF 510-9428 INSTALLATION GP-COMMUNICATION

AN ATTACHMENT

SMCS-7610 **i07749738**

NOTE	PART NUMBER	QTY	PART NAME 1 2 3 4 5 6 (PRODUCT LEVEL)	SEE PAGE
	568-5140	1	SOFTWARE GP-MONITOR (SATELLITE RADIO)	

<END>

445-0071 CONTROL GP-UNPROGRAMMED

S/N: E7A1-UP
PART OF 446-6728 ENGINE AR-PRIMARY
ALSO AN ATTACHMENT

SMCS-7610 **i06675545**

NOTE	REF NO	GRAPHIC REF	PART NUMBER	QTY	PART NAME 1 2 3 4 5 6 (PRODUCT LEVEL)	SEE PAGE
	1	1	**155-0576**	8	MOUNT-ISOLATION	
	2	1	**7W-2632**	1	WASHER (8.5X16.8X1.6-MM THK)	
	3	1	**217-0099**	4	SPACER (8.2X25X2-MM THK)	
	4	1	**278-5203**	4	SPACER	
R	5	1	**374-2640**	1	CONTROL GP-UNPROGRAMMED	
M	6	1	**6I-0456**	4	BOLT (M8X1.25X45-MM)	

M - METRIC PART
R - REMANUFACTURED PART MAY BE AVAILABLE

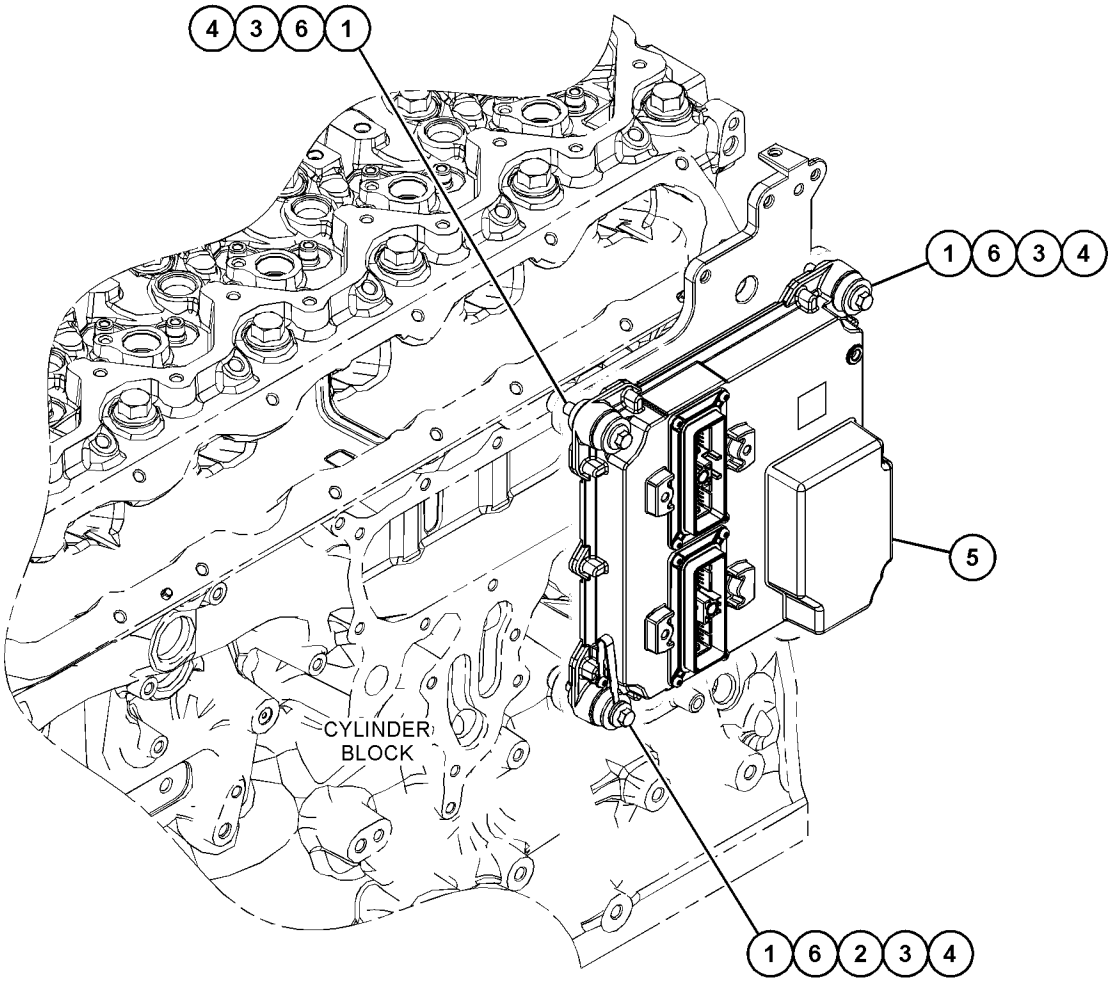

GRAPHIC #1 <END> g03731412

396-4423 ELECTRICAL AR

S/N: CH91-UP
PART OF 449-2823 COMMON AR
ALSO AN ATTACHMENT

SMCS-1408 **i06068131**

NOTE	PART NUMBER	QTY	PART NAME 1 2 3 4 5 6 (PRODUCT LEVEL)	SEE PAGE
Y	*377-1843*	1	BATTERY & WIRING GP	108
Y	*337-5750*	1	CONTROL & MTG GP-MACHINE (GENERAL DUTY)	113
Y	*186-0484*	1	HORN GP-ELECTRIC	854
Y	*288-8649*	1	LIGHTING GP-ROADING (LED)	173
Y	*252-6615*	1	REFLECTOR GP	179
Y	*337-5830*	1	SWITCH GP-SHUTDOWN (ENGINE)	190
Y	*377-1841*	1	TANK GP-WINDOW WASHER	888
Y	*337-5816*	1	WIRING GP-CAMERA (UPPER) (UPPER)	201
Y	*377-1926*	1	WIRING GP-CHASSIS (ELECTRONIC)	206
Y	*377-1867*	1	WIRING GP-CHASSIS (ENGINE ECM)	202
Y	*377-1869*	1	WIRING GP-CHASSIS (ELECTRIC)	204

Y - SEPARATE ILLUSTRATION

<END>

431-9097 ELECTRICAL AR—CAB

S/N: CH91-UP
PART OF 396-6834 CAB AR
ALSO AN ATTACHMENT

SMCS-1408 **i06882515**

NOTE	PART NUMBER	QTY	PART NAME 1 2 3 4 5 6 (PRODUCT LEVEL)	SEE PAGE
Y	*431-9110*	1	INSTALLATION GP-RADIO	855
Y	*337-5782*	1	MONITOR & MOUNTING GP	176
Y	*337-5780*	1	WIRING GP-CAB (FUSE, RELAY)	192
Y	*431-9098*	1	WIRING GP-CAB (ROOF)	195
Y	*431-9108*	1	WIRING GP-CAB (CONSOLE)	197
Y	*337-5752*	1	WIRING GP-CONSOLE	207
			—OR—	
Y	*377-1851*	1	WIRING GP-CONSOLE	209
Y	*337-5814*	1	WIRING GP-MONITOR (CAMERA, REAR)	216

Y - SEPARATE ILLUSTRATION

<END>

337-5847 ELECTRONICS GP-MACHINE

S/N: CH91-UP
PART OF 337-5819 CONTROL & MTG GP-MACHINE
AN ATTACHMENT

SMCS-7610, 7620 **i05526135**

NOTE	PART NUMBER	QTY	PART NAME 1 2 3 4 5 6 (PRODUCT LEVEL)	SEE PAGE
	370-5236	1	SOFTWARE GP-MACHINE	
			—OR—	
R	**377-4710**	1	CONTROL GP-UNPROGRAMMED (MACHINE)	

R - REMANUFACTURED PART MAY BE AVAILABLE

<END>

377-1913 ELECTRONICS GP-MACHINE

S/N: CH91-UP

PART OF 337-5750 CONTROL & MTG GP-MACHINE

ALSO AN ATTACHMENT

SMCS-7610, 7620 **i07147423**

NOTE	REF NO	GRAPHIC REF	PART NUMBER	QTY	PART NAME 1 2 3 4 5 6 (PRODUCT LEVEL)	SEE PAGE
R	1	1	**455-9584**	1	CONTROL GP-ELECTRONIC	
F			**533-5428**	1	SOFTWARE GP-MACHINE	

F - NOT SHOWN
R - REMANUFACTURED PART MAY BE AVAILABLE

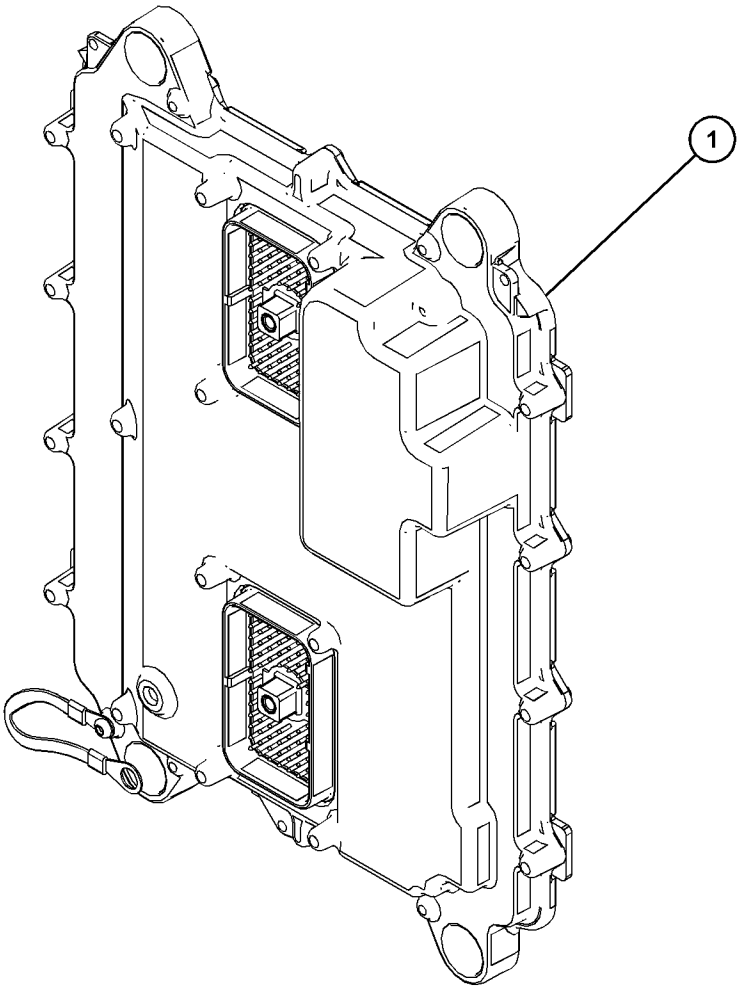

GRAPHIC #1 <END> g03868391

275-4899 GUARD GP-ALTERNATOR

S/N: CH91-UP
PART OF 354-7270 INSTALLATION AR
ALSO AN ATTACHMENT

SMCS-1405, 7168 **i05495267**

NOTE	REF NO	GRAPHIC REF	PART NUMBER	QTY	PART NAME 1 2 3 4 5 6 (PRODUCT LEVEL)	SEE PAGE
	1	1	**351-5175**	1	GUARD AS	
M	2	1	**131-3983**	1	BOLT-SOCKET HEAD (M8X1.25X35-MM)	
	3	1	**8T-4224**	1	WASHER-HARD (8.8X16X2-MM THK)	
	4	1	**351-9780**	1	BOSS	
	5	1	**131-5492**	1	RETAINER-CAPTIVE	

M - METRIC PART

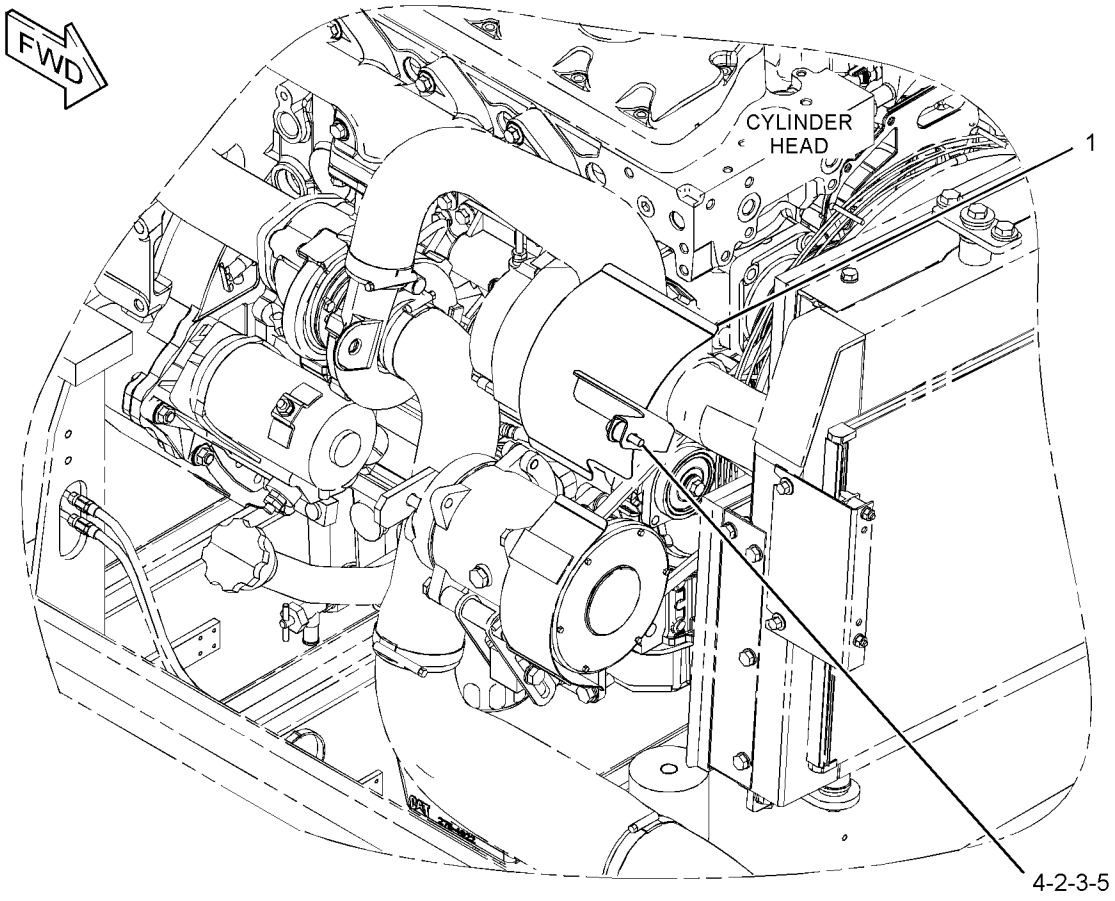

GRAPHIC #1 <END> g02364257

375-0597 HARNESS AS-CAB—FUSE, RELAY

S/N: CH91-UP
PART OF 337-5780 WIRING GP-CAB
ALSO AN ATTACHMENT

SMCS-1408 **i05558160**

NOTE	PART NUMBER	QTY	PART NAME 1 2 3 4 5 6 (PRODUCT LEVEL)	SEE PAGE
	238-2319	1	BASE AS (FUSE, RELAY PANEL)	
M	**095-0742**	2	SCREW-MACHINE (M6X1X16-MM)	
	170-9394	40	TERMINAL	
	9X-8256	2	WASHER (6.6X12X2-MM THK)	
	149-5051	6	CONNECTOR-RECEPTACLE	
	7Y-3952	1	PLUG-CONNECTOR (2-PIN)	
	8T-8729	4	PIN-CONNECTOR (16-GA TO 20-GA)	
	9X-3401	37	PIN-CONNECTOR (16-GA TO 18-GA)	
			—OR—	
	126-1767	37	PIN-CONNECTOR (14-GA TO 16-GA)	
	155-2270	2	KIT-CONNECTING PLUG (2-PIN)	
	155-2271	1	KIT-CONNECTING PLUG (4-PIN)	
			(EACH PLUG KIT INCLUDES PLUG AS, WEDGE & INTERFACE SEAL)	
	230-4009	2	PLUG AS-CONNECTOR (12-PIN)	
			(EACH INCLUDES)	
	264-7034	1	SEAL-CONNECTOR	
	230-4013	1	PLUG AS-CONNECTOR (3-PIN)	
	264-7030	1	SEAL-CONNECTOR	
	239-7349	1	PLUG AS-CONNECTOR (4-PIN)	
	264-7031	1	SEAL-CONNECTOR	
	239-7352	1	PLUG AS-CONNECTOR (6-PIN)	
	264-7032	1	SEAL-CONNECTOR	
	239-7356	1	PLUG AS-CONNECTOR (12-PIN)	
	264-7034	1	SEAL-CONNECTOR	
	8T-8737	8	PLUG-SEAL	
	102-8802	2	KIT-RECEPTACLE (2-PIN)	
			(EACH INCLUDES RECEPTACLE AS & WEDGE)	
	230-4010	1	RECEPTACLE AS-CONNECTOR (12-PIN)	
	231-2300	1	RECEPTACLE AS-CONNECTOR (8-PIN)	
	239-7353	1	RECEPTACLE AS-CONNECTOR (6-PIN)	
	239-7357	1	RECEPTACLE AS-CONNECTOR (12-PIN)	
	8T-8730	4	SOCKET-CONNECTOR (16-GA TO 18-GA)	
	9X-3402	4	SOCKET-CONNECTOR (16-GA TO 18-GA)	
	9X-3402	42	SOCKET-CONNECTOR (16-GA TO 18-GA)	
			—OR—	
	126-1768	42	SOCKET-CONNECTOR (14-GA TO 16-GA)	
	189-3158	1	SUPPRESSOR-ARC	
B	**329-3734**		TAPE-ELECTRICAL	
	179-9046	1	TERMINAL (14-GA TO 20-GA)	
	2L-8067	3	TERMINAL-RING (10-GA TO 12-GA, 1/4-IN SCREW)	
	128-4178	1	TERMINAL AS	
	2L-8068	1	TERMINAL-RING (10-GA TO 12-GA, 5/16-IN SCREW)	
D	**5P-6006**		TUBE-HEAT SHRINK (9.52-MM DIA) (0.1-M)	
	2L-8077	1	TERMINAL-RING (14-GA TO 16-GA, 1/4-IN SCREW)	
	2L-8078	1	TERMINAL-RING (14-GA TO 16-GA, 5/16-IN SCREW)	
	104-1995	8	TERMINAL-BLADE (14-GA TO 18-GA)	
	170-6890	11	TERMINAL-BLADE (14-GA)	

375-0597 **HARNESS AS-CAB (**contd.**)** **i05558160**

NOTE	PART NUMBER	QTY	PART NAME 1 2 3 4 5 6 (PRODUCT LEVEL)	SEE PAGE
	170-6891	23	TERMINAL-BLADE (16-GA TO 18-GA)	
	7Y-3951	2	TERMINAL-BLADE (14-GA)	
	149-5069	14	TERMINAL-BLADE (14-GA TO 20-GA)	
	149-5070	30	TERMINAL-BLADE (16-GA TO 20-GA)	
	149-5071	16	TERMINAL-BLADE (12-GA TO 14-GA)	
E	**125-7874**		TUBE-HEAT SHRINK (5.72-MM DIA) (65-CM)	
E	**125-7875**		TUBE-HEAT SHRINK (7.44-MM DIA) (10-CM)	

B - USE AS REQUIRED
D - ORDER BY THE METER
E - ORDER BY THE CENTIMETER
M - METRIC PART

<END>

377-1848 HARNESS AS-CAB

S/N: CH91-UP
PART OF 431-9108 WIRING GP-CAB
ALSO AN ATTACHMENT

SMCS-1408 **i05554309**

NOTE	PART NUMBER	QTY	PART NAME 1 2 3 4 5 6 (PRODUCT LEVEL)	SEE PAGE
	111-7898	3	CONNECTOR (8-PIN)	
	142-9117	1	CONNECTOR (10-PIN)	
	5P-6271	1	CONNECTOR AS	
	7Y-3952	2	PLUG-CONNECTOR (2-PIN)	
	125-4784	1	PLUG-CONNECTOR (12-PIN)	
	138-5184	1	PLUG-CONNECTOR (20-PIN)	
	8T-8729	2	PIN-CONNECTOR (16-GA TO 20-GA)	
	9X-3401	4	PIN-CONNECTOR (16-GA TO 18-GA)	
	144-1636	57	PIN-CONNECTOR (14-GA TO 18-GA)	
	155-2271	1	KIT-CONNECTING PLUG (4-PIN)	
			(INCLUDES PLUG AS, WEDGE & INTERFACE SEAL)	
	230-4009	2	PLUG AS-CONNECTOR (12-PIN)	
			(EACH INCLUDES)	
	264-7034	1	SEAL-CONNECTOR	
	241-8834	1	PLUG AS-CONNECTOR (12-PIN)	
	264-7034	1	SEAL-CONNECTOR	
	324-5678	2	RESISTOR AS (120-OHM)	
			(EACH INCLUDES)	
	264-7029	1	SEAL-CONNECTOR	
	8T-8737	8	PLUG-SEAL	
	230-4010	1	RECEPTACLE AS-CONNECTOR (12-PIN)	
	230-4012	2	RECEPTACLE AS-CONNECTOR (2-PIN)	
	230-5011	1	RECEPTACLE AS-CONNECTOR (6-PIN)	
	231-2300	1	RECEPTACLE AS-CONNECTOR (8-PIN)	
	231-2301	1	RECEPTACLE AS-CONNECTOR (8-PIN)	
	239-7357	1	RECEPTACLE AS-CONNECTOR (12-PIN)	
	263-4725	1	RECEPTACLE AS-CONNECTOR (2-PIN)	
	9W-1951	1	RECEPTACLE-CONNECTOR (9-PIN)	
	8T-8730	12	SOCKET-CONNECTOR (16-GA TO 18-GA)	
	9X-3402	2	SOCKET-CONNECTOR (16-GA TO 18-GA)	
	126-1766	22	SOCKET-CONNECTOR (14-GA TO 18-GA)	
	3S-2093	3	STRAP-CABLE	
	8L-8413	10	STRAP-CABLE (WHITE)	
B	**1P-0810**		TAPE-ELECTRICAL	
B	**329-3734**		TAPE-ELECTRICAL	
	5W-1987	7	TERMINAL-BLADE (12-GA TO 16-GA)	
	128-4168	1	TERMINAL AS	
	6H-3592	1	TERMINAL-RING (6-GA TO 8-GA, 5/16-IN SCREW)	
	6V-9023		TUBE-HEAT SHRINK (12.7-MM DIA) (4-CM)	
	128-4178	3	TERMINAL AS	
			(EACH INCLUDES)	
	2L-8068	1	TERMINAL-RING (10-GA TO 12-GA, 5/16-IN SCREW)	
D	**5P-6006**		TUBE-HEAT SHRINK (9.52-MM DIA) (0.1-M)	
	2L-8075	1	TERMINAL-RING (14-GA TO 16-GA, NO. 8 SCREW)	
	091-2436	1	TERMINAL-BLADE (18-GA TO 22-GA)	
	104-1995	26	TERMINAL-BLADE (14-GA TO 18-GA)	
	7Y-3951	4	TERMINAL-BLADE (14-GA)	

377-1848 **HARNESS AS-CAB (**contd.**)** **i05554309**

NOTE	PART NUMBER	QTY	PART NAME 1 2 3 4 5 6 (PRODUCT LEVEL)	SEE PAGE
	125-4785	33	TERMINAL (FEMALE)	
	298-5789	1	TERMINAL	
E	**125-7874**		TUBE-HEAT SHRINK (5.72-MM DIA) (85-CM)	
E	**125-7875**		TUBE-HEAT SHRINK (7.44-MM DIA) (5-CM)	

B - USE AS REQUIRED
D - ORDER BY THE METER
E - ORDER BY THE CENTIMETER

<END>

450-0675 HARNESS AS-CAB—ROOF

S/N: CH91-UP
PART OF 431-9098 WIRING GP-CAB
ALSO AN ATTACHMENT

SMCS-1408 **i05525879**

NOTE	PART NUMBER	QTY	PART NAME 1 2 3 4 5 6 (PRODUCT LEVEL)	SEE PAGE
	123-7615	1	CONNECTOR (1-PIN)	
	213-8350	1	CONNECTOR AS	
	213-8351	1	CONNECTOR AS	
	167-3630	1	CONNECTOR-PLUG	
	9X-3401	12	PIN-CONNECTOR (16-GA TO 18-GA)	
			—OR—	
	126-1767	12	PIN-CONNECTOR (14-GA TO 16-GA)	
	155-2270	1	KIT-CONNECTING PLUG (2-PIN)	
	155-2274	1	KIT-CONNECTING PLUG (6-PIN)	
			(EACH PLUG KIT INCLUDES PLUG AS, WEDGE & INTERFACE SEAL)	
	8T-8737	2	PLUG-SEAL	
	230-4010	1	RECEPTACLE AS-CONNECTOR (12-PIN)	
	9X-3402	8	SOCKET-CONNECTOR (16-GA TO 18-GA)	
			—OR—	
	126-1768	8	SOCKET-CONNECTOR (14-GA TO 16-GA)	
B	**1P-0810**		TAPE-ELECTRICAL	
B	**329-3734**		TAPE-ELECTRICAL	
	167-3631	2	TERMINAL (FEMALE)	
	179-9046	2	TERMINAL (14-GA TO 20-GA)	
	183-7754	7	TERMINAL (16-AMPERE)	
	7Y-3966	3	TERMINAL AS	
			(EACH INCLUDES)	
	7Y-3962	1	TERMINAL-BULLET (MALE)	
	7Y-3964	1	TUBE	
	7Y-3967	3	TERMINAL AS	
			(EACH INCLUDES)	
	7Y-3963	1	TERMINAL-BULLET (FEMALE)	
	7Y-3965	1	TUBE	
	104-1995	2	TERMINAL-BLADE (14-GA TO 18-GA)	
E	**119-3662**		TUBE-HEAT SHRINK (10.85-MM DIA) (7-CM)	
E	**125-7874**		TUBE-HEAT SHRINK (5.72-MM DIA) (15-CM)	

B - USE AS REQUIRED
E - ORDER BY THE CENTIMETER

<END>

476-0308 HARNESS AS-CAB

S/N: CH91-UP
PART OF 431-9108 WIRING GP-CAB
ALSO AN ATTACHMENT

SMCS-1408 **i06834648**

NOTE	PART NUMBER	QTY	PART NAME 1 2 3 4 5 6 (PRODUCT LEVEL)	SEE PAGE
	455-9568	1	CAP AS	
	424-4322	1	COVER-CONNECTOR	
	274-3779	1	CAP-SEAL	
	111-7898	3	CONNECTOR (8-PIN)	
	142-9117	1	CONNECTOR (10-PIN)	
	5P-6271	1	CONNECTOR AS	
	270-2679	1	LOCKWASHER	
	203-9007	1	NUT (1-1/2-18-THD)	
	9X-3401	67	PIN-CONNECTOR (16-GA TO 18-GA)	
			—OR—	
	126-1767	67	PIN-CONNECTOR (14-GA TO 16-GA)	
	155-2256	1	KIT-CONNECTING PLUG (12-PIN)	
	155-2271	1	KIT-CONNECTING PLUG (4-PIN)	
			(EACH PLUG KIT INCLUDES PLUG AS, WEDGE, & INTERFACE SEAL)	
	230-4009	2	PLUG AS-CONNECTOR (12-PIN)	
	241-8834	1	PLUG AS-CONNECTOR (12-PIN)	
			(EACH PLUG AS INCLUDES)	
	455-0709	1	SEAL-CONNECTOR	
	7Y-3952	2	PLUG-CONNECTOR (2-PIN)	
	125-4784	1	PLUG-CONNECTOR (12-PIN)	
	138-5184	1	PLUG-CONNECTOR (20-PIN)	
	8T-8737	12	PLUG-SEAL	
	230-4010	1	RECEPTACLE AS-CONNECTOR (12-PIN)	
	230-4012	2	RECEPTACLE AS-CONNECTOR (2-PIN)	
	230-5011	1	RECEPTACLE AS-CONNECTOR (6-PIN)	
	231-2300	1	RECEPTACLE AS-CONNECTOR (8-PIN)	
	231-2301	1	RECEPTACLE AS-CONNECTOR (8-PIN)	
	239-7357	1	RECEPTACLE AS-CONNECTOR (12-PIN)	
	263-4725	1	RECEPTACLE AS-CONNECTOR (2-PIN)	
	451-8019	1	RECEPTACLE AS-CONNECTOR (14-PIN)	
	324-5678	2	RESISTOR AS (120-OHM)	
			(EACH INCLUDES)	
	264-7029	1	SEAL-CONNECTOR	
	9X-3402	45	SOCKET-CONNECTOR (16-GA TO 18-GA)	
			—OR—	
	126-1768	45	SOCKET-CONNECTOR (14-GA TO 16-GA)	
	8L-8413	19	STRAP-CABLE (WHITE)	
B	**1P-0810**		TAPE-ELECTRICAL	
B	**329-3734**		TAPE-ELECTRICAL	
	125-4785	33	TERMINAL (FEMALE)	
	298-5789	1	TERMINAL	
	2L-8051	1	TERMINAL-RING (6-GA, 5/16-IN SCREW)	
	128-4178	3	TERMINAL AS	
			(EACH INCLUDES)	
	2L-8068	1	TERMINAL-RING (10-GA TO 12-GA, 5/16-IN SCREW)	
D	**5P-6006**		TUBE-HEAT SHRINK (9.52-MM DIA) (0.1-M)	
	2L-8075	1	TERMINAL-RING (14-GA TO 16-GA, NO. 8 SCREW)	

476-0308 **HARNESS AS-CAB (**contd.**)** **i06834648**

NOTE	PART NUMBER	QTY	PART NAME 1 2 3 4 5 6 (PRODUCT LEVEL)	SEE PAGE
	5W-1987	7	TERMINAL-BLADE (12-GA TO 16-GA)	
	7Y-3951	4	TERMINAL-BLADE (14-GA)	
	104-1995	26	TERMINAL-BLADE (14-GA TO 18-GA)	
	091-2436	1	TERMINAL-BLADE (18-GA TO 22-GA)	
E	**125-7874**		TUBE-HEAT SHRINK (5.72-MM DIA) (85-CM)	
E	**125-7875**		TUBE-HEAT SHRINK (7.44-MM DIA) (15-CM)	
E	**125-7876**		TUBE-HEAT SHRINK (17.78-MM DIA) (10-CM)	

B - USE AS REQUIRED
D - ORDER BY THE METER
E - ORDER BY THE CENTIMETER

<END>

337-5767 HARNESS AS-CHASSIS—ELECTRONIC

S/N: CH91-UP
PART OF 377-1926 WIRING GP-CHASSIS
ALSO AN ATTACHMENT

SMCS-1408 **i05934519**

NOTE	PART NUMBER	QTY	PART NAME 1 2 3 4 5 6 (PRODUCT LEVEL)	SEE PAGE
	319-3237	2	HOUSING AS-CONNECTOR	
	342-2972	1	CAP-CONNECTOR (2-PIN)	
	342-2973	2	CAP-CONNECTOR (3-PIN)	
	342-2974	1	CAP-CONNECTOR (6-PIN)	
	342-2975	1	CAP-CONNECTOR (8-PIN)	
E	**232-0893**		CONDUIT-FLEXIBLE (6.2-MM ID) (199-CM)	
	126-1774	2	COVER-CONNECTOR	
	9X-3401	21	PIN-CONNECTOR (16-GA TO 18-GA)	
			—OR—	
	126-1767	21	PIN-CONNECTOR (14-GA TO 16-GA)	
	147-1446	1	PLUG AS-CONNECTOR (70-PIN)	
	147-1445	1	PLUG AS-CONNECTOR (70-PIN)	
			(EACH PLUG AS INCLUDES)	
	159-9322	1	SEAL-O-RING	
	155-2255	1	KIT-CONNECTING PLUG (12-PIN)	
	155-2260	6	KIT-CONNECTING PLUG (3-PIN)	
	155-2270	17	KIT-CONNECTING PLUG (2-PIN)	
	155-2271	2	KIT-CONNECTING PLUG (4-PIN)	
			(EACH PLUG KIT INCLUDES PLUG AS, WEDGE & INTERFACE SEAL)	
	281-8801	1	PLUG AS-CONNECTOR (2-PIN)	
	238-8247	1	PLUG AS-CONNECTOR (2-PIN)	
	238-8245	2	PLUG AS-CONNECTOR (2-PIN)	
	230-4011	2	PLUG AS-CONNECTOR (2-PIN)	
			(EACH PLUG AS INCLUDES)	
	455-0704	1	SEAL-CONNECTOR	
	240-7879	2	PLUG AS-CONNECTOR (3-PIN)	
	237-0227	1	PLUG AS-CONNECTOR (3-PIN)	
	230-4013	1	PLUG AS-CONNECTOR (3-PIN)	
			(EACH PLUG AS INCLUDES)	
	455-0705	1	SEAL-CONNECTOR	
	281-8811	1	PLUG AS-CONNECTOR (6-PIN)	
	239-7352	1	PLUG AS-CONNECTOR (6-PIN)	
	230-5010	2	PLUG AS-CONNECTOR (6-PIN)	
			(EACH PLUG AS INCLUDES)	
	455-0707	1	SEAL-CONNECTOR	
	231-2296	1	PLUG AS-CONNECTOR (8-PIN)	
	231-2295	2	PLUG AS-CONNECTOR (8-PIN)	
			(EACH PLUG AS INCLUDES)	
	455-0708	1	SEAL-CONNECTOR	
	324-5678	1	RESISTOR AS (120-OHM)	
	264-7029	1	SEAL-CONNECTOR	
	8T-8737	85	PLUG-SEAL	
	102-8802	1	KIT-RECEPTACLE (2-PIN)	
			(INCLUDES RECEPTACLE AS & WEDGE)	
	230-4010	1	RECEPTACLE AS-CONNECTOR (12-PIN)	
	230-4012	1	RECEPTACLE AS-CONNECTOR (2-PIN)	
	230-5011	1	RECEPTACLE AS-CONNECTOR (6-PIN)	
	104-6692	9	RECEPTACLE AS-CONNECTOR (2-PIN)	

337-5767 **HARNESS AS-CHASSIS (**contd.**)** **i05934519**

NOTE	PART NUMBER	QTY	PART NAME 1 2 3 4 5 6 (PRODUCT LEVEL)	SEE PAGE
			(EACH INCLUDES)	
	102-8802	1	KIT-RECEPTACLE (2-PIN)	
			(INCLUDES RECEPTACLE AS & WEDGE)	
	8T-8737	2	PLUG-SEAL	
	214-0864	1	RECEPTACLE AS (4-PIN)	
	102-8804	1	KIT-RECEPTACLE (4-PIN)	
			(INCLUDES RECEPTACLE AS & WEDGE)	
	8T-8737	4	PLUG-SEAL	
	274-3779	1	CAP-SEAL	
	9X-3402	200	SOCKET-CONNECTOR (16-GA TO 18-GA)	
			—OR—	
	126-1768	200	SOCKET-CONNECTOR (14-GA TO 16-GA)	
	3S-2093	4	STRAP-CABLE	
B	**1P-0810**		TAPE-ELECTRICAL	
	2L-8067	1	TERMINAL-RING (10-GA TO 12-GA, 1/4-IN SCREW)	
	131-1497	3	TERMINAL AS-RING (10-GA TO 12-GA)	
			(EACH INCLUDES)	
	2L-8068	1	TERMINAL-RING (10-GA TO 12-GA, 5/16-IN SCREW)	
E	**125-7875**		TUBE-HEAT SHRINK (7.44-MM DIA) (4-CM)	
	2L-8078	1	TERMINAL-RING (14-GA TO 16-GA, 5/16-IN SCREW)	
E	**125-7874**		TUBE-HEAT SHRINK (5.72-MM DIA) (150-CM)	
E	**125-7875**		TUBE-HEAT SHRINK (7.44-MM DIA) (5-CM)	

B - USE AS REQUIRED
E - ORDER BY THE CENTIMETER

<END>

377-1870 HARNESS AS-CHASSIS

S/N: CH91-UP
PART OF 377-1869 WIRING GP-CHASSIS
ALSO AN ATTACHMENT

SMCS-1408 **i05970859**

NOTE	PART NUMBER	QTY	PART NAME 1 2 3 4 5 6 (PRODUCT LEVEL)	SEE PAGE
E	**289-3195**		CONDUIT (131-CM)	
	123-7615	3	CONNECTOR (1-PIN)	
	9X-3401	4	PIN-CONNECTOR (16-GA TO 18-GA)	
			—OR—	
	126-1767	4	PIN-CONNECTOR (14-GA TO 16-GA)	
	155-2265	1	KIT-CONNECTING PLUG (8-PIN)	
	155-2270	10	KIT-CONNECTING PLUG (2-PIN)	
	155-2271	4	KIT-CONNECTING PLUG (4-PIN)	
	155-2274	3	KIT-CONNECTING PLUG (6-PIN)	
			(EACH PLUG KIT INCLUDES PLUG AS, WEDGE & INTERFACE SEAL)	
	230-4009	1	PLUG AS-CONNECTOR (12-PIN)	
	455-0709	1	SEAL-CONNECTOR	
	231-2297	1	RECEPTACLE AS-CONNECTOR (8-PIN)	
	455-0708	1	SEAL-CONNECTOR	
	239-7356	1	PLUG AS-CONNECTOR (12-PIN)	
	455-0709	1	SEAL-CONNECTOR	
	8T-8737	4	PLUG-SEAL	
	230-5009	1	RECEPTACLE AS-CONNECTOR (4-PIN)	
	104-6692	7	RECEPTACLE AS-CONNECTOR (2-PIN)	
			(EACH INCLUDES)	
	8T-8737	2	PLUG-SEAL	
	102-8802	1	KIT-RECEPTACLE (2-PIN)	
			(INCLUDES RECEPATCLE AS & WEDGE)	
	214-0864	1	RECEPTACLE AS (4-PIN)	
	8T-8737	4	PLUG-SEAL	
	102-8804	1	KIT-RECEPTACLE (4-PIN)	
			(INCLUDES RECEPATCLE AS & WEDGE)	
	9X-3402	90	SOCKET-CONNECTOR (16-GA TO 18-GA)	
			—OR—	
	126-1768	90	SOCKET-CONNECTOR (14-GA TO 16-GA)	
B	**1P-0810**		TAPE-ELECTRICAL	
	5P-3454	1	TERMINAL-RING (4-GA, 5/16-IN SCREW)	
	2L-8051	3	TERMINAL-RING (6-GA, 5/16-IN SCREW)	
			—OR—	
	5P-3455	3	TERMINAL-RING (8-GA, 5/16-IN SCREW)	
	2L-8052	1	TERMINAL-RING (6-GA, 3/8-IN SCREW)	
			—OR—	
	2L-8060	1	TERMINAL-RING (8-GA, 3/8-IN SCREW)	
	131-1497	1	TERMINAL AS-RING (10-GA TO 12-GA)	
	2L-8068	1	TERMINAL-RING (10-GA TO 12-GA, 5/16-IN SCREW)	
E	**125-7875**		TUBE-HEAT SHRINK (7.44-MM DIA) (4-CM)	
	201-4022	1	TERMINAL AS (6-GA)	
	104-1995	6	TERMINAL-BLADE (14-GA TO 18-GA)	
E	**125-7874**		TUBE-HEAT SHRINK (5.72-MM DIA) (55-CM)	

B - USE AS REQUIRED
E - ORDER BY THE CENTIMETER

<END>

377-1852 HARNESS AS-CONSOLE–SEAT

S/N: CH91-UP
PART OF 377-1851 WIRING GP-CONSOLE
ALSO AN ATTACHMENT

SMCS-1408 **i06882519**

NOTE	PART NUMBER	QTY	PART NAME 1 2 3 4 5 6 (PRODUCT LEVEL)	SEE PAGE
E	**292-2896**		CONDUIT (16.9-MM ID) (176-CM)	
	111-7898	4	CONNECTOR (8-PIN)	
	9X-3401	22	PIN-CONNECTOR (16-GA TO 18-GA)	
			–OR–	
	126-1767	22	PIN-CONNECTOR (14-GA TO 16-GA)	
	155-2255	2	KIT-CONNECTING PLUG (12-PIN)	
	155-2260	1	KIT-CONNECTING PLUG (3-PIN)	
	155-2271	1	KIT-CONNECTING PLUG (4-PIN)	
			(EACH PLUG KIT INCLUDES PLUG AS, WEDGE & INTERFACE SEAL)	
	230-5008	1	PLUG AS-CONNECTOR (4-PIN)	
	264-7031	1	SEAL-CONNECTOR	
	231-2295	1	PLUG AS-CONNECTOR (8-PIN)	
	264-7033	1	SEAL-CONNECTOR	
	8T-8737	10	PLUG-SEAL	
	239-7353	1	RECEPTACLE AS-CONNECTOR (6-PIN)	
	241-8835	1	RECEPTACLE AS-CONNECTOR (12-PIN)	
	281-8812	1	RECEPTACLE AS-CONNECTOR (6-PIN)	
	9X-3402	35	SOCKET-CONNECTOR (16-GA TO 18-GA)	
			–OR–	
	126-1768	35	SOCKET-CONNECTOR (14-GA TO 16-GA)	
B	**1P-0810**		TAPE-ELECTRICAL	
B	**329-3734**		TAPE-ELECTRICAL	
	5W-1987	2	TERMINAL-BLADE (12-GA TO 16-GA)	
	104-1995	18	TERMINAL-BLADE (14-GA TO 18-GA)	
E	**119-3662**		TUBE-HEAT SHRINK (10.85-MM DIA) (7-CM)	
E	**125-7874**		TUBE-HEAT SHRINK (5.72-MM DIA) (10-CM)	
E	**125-7875**		TUBE-HEAT SHRINK (7.44-MM DIA) (10-CM)	

B - USE AS REQUIRED
E - ORDER BY THE CENTIMETER

<END>

359-4777 HARNESS AS-CONTROL

S/N: CH91-UP

PART OF 453-7073 CONTROL & MTG GP-COMMUNICATION, 359-4775 INSTALLATION GP-COMMUNICATION

AN ATTACHMENT

SMCS-1408 **i05493477**

NOTE	PART NUMBER	QTY	PART NAME 1 2 3 4 5 6 (PRODUCT LEVEL)	SEE PAGE
	126-1774	1	COVER-CONNECTOR	
	8T-8729	3	PIN-CONNECTOR (16-GA TO 20-GA)	
	9W-0852	1	PIN-CONNECTOR (14-GA TO 16-GA)	
	9X-3401	4	PIN-CONNECTOR (16-GA TO 18-GA)	
	160-7690	1	PLUG AS-CONNECTOR (70-PIN)	
	159-9322	1	SEAL-O-RING	
	8T-8737	66	PLUG-SEAL	
	102-8801	1	KIT-RECEPTACLE (12-PIN)	
			(INCLUDES RECEPTACLE AS & WEDGE)	
	9X-3402	8	SOCKET-CONNECTOR (16-GA TO 18-GA)	
			—OR—	
	126-1768	8	SOCKET-CONNECTOR (14-GA TO 16-GA)	
	3S-2093	2	STRAP-CABLE	
	2L-8077	1	TERMINAL-RING (14-GA TO 16-GA, 1/4-IN SCREW)	
E	**125-7874**		TUBE-HEAT SHRINK (5.72-MM DIA) (5-CM)	

E - ORDER BY THE CENTIMETER

<END>

377-1941 HARNESS AS-CONTROL—PRODUCT LINK 321SR

S/N: CH91-UP

PART OF 377-1940 CONTROL GP-COMMUNICATION

AN ATTACHMENT

SMCS-1408 **i05982818**

NOTE	PART NUMBER	QTY	PART NAME 1 2 3 4 5 6 (PRODUCT LEVEL)	SEE PAGE
	126-1774	1	COVER-CONNECTOR	
	9X-3401	8	PIN-CONNECTOR (16-GA TO 18-GA)	
			—OR—	
	126-1767	8	PIN-CONNECTOR (14-GA TO 16-GA)	
	461-1538	1	PLUG AS-CONNECTOR (12-PIN)	
	155-2255	1	KIT-CONNECTING PLUG (12-PIN)	
			(INCLUDES PLUG AS, WEDGE & INTERFACE SEAL)	
	8T-8737	12	PLUG-SEAL	
	155-2255	1	KIT-CONNECTING PLUG (12-PIN)	
			(INCLUDES PLUG AS, WEDGE & INTERFACE SEAL)	
	160-7690	1	PLUG AS-CONNECTOR (70-PIN)	
	159-9322	1	SEAL-O-RING	
	8T-8737	64	PLUG-SEAL	
	102-8801	1	KIT-RECEPTACLE (12-PIN)	
			(INCLUDES RECEPTACLE AS & WEDGE)	
	9X-3402	22	SOCKET-CONNECTOR (16-GA TO 18-GA)	
			—OR—	
	126-1768	22	SOCKET-CONNECTOR (14-GA TO 16-GA)	
	3S-2093	2	STRAP-CABLE	
E	**125-7874**		TUBE-HEAT SHRINK (5.72-MM DIA) (20-CM)	

E - ORDER BY THE CENTIMETER

<END>

377-1844 HARNESS AS-ENGINE

S/N: CH91-UP
PART OF 377-1843 BATTERY & WIRING GP
ALSO AN ATTACHMENT

SMCS-1408 **i05970855**

NOTE	PART NUMBER	QTY	PART NAME 1 2 3 4 5 6 (PRODUCT LEVEL)	SEE PAGE
	328-0072	1	BOOT	
	207-1219	1	FUSE (20-AMPERE) (GLOW PLUG)	
	232-6314	2	FUSE (60-AMPERE) (START)	
	232-6315	2	FUSE (80-AMPERE) (ALTERNATOR)	
	123-8838	5	HOLDER AS-FUSE	
	150-5311	1	LOCKWASHER	
B	**1P-0810**		TAPE-ELECTRICAL	
	121-2970	1	TERMINAL-BATTERY (POSITIVE)	
	5P-3454	1	TERMINAL-RING (4-GA, 5/16-IN SCREW)	
	2L-8051	1	TERMINAL-RING (6-GA, 5/16-IN SCREW)	
			—OR—	
	5P-3455	1	TERMINAL-RING (8-GA, 5/16-IN SCREW)	
	2L-8049	1	TERMINAL-RING (6-GA, NO. 10 SCREW)	
			—OR—	
	2L-8057	1	TERMINAL-RING (8-GA, NO. 10 SCREW)	
	201-4021	4	TERMINAL AS (8-GA)	
	201-4022	3	TERMINAL AS (6-GA)	
	364-2790	1	TERMINAL AS (10-GA)	
	1S-7251	1	TERMINAL-CABLE (00-GA, 1/2-IN SCREW)	
	1S-7252	1	TERMINAL-CABLE (00-GA, 3/8-IN SCREW)	
	9G-4344	2	TERMINAL-RING (4-GA, 1/2-IN SCREW)	
	9G-4336	1	TERMINAL-RING (4-GA, 3/8-IN SCREW)	
	2L-8050	2	TERMINAL-RING (6-GA, 1/4-IN SCREW)	
			—OR—	
	2L-8058	2	TERMINAL-RING (8-GA, 1/4-IN SCREW)	
			—OR—	
	2L-8067	2	TERMINAL-RING (10-GA TO 12-GA, 1/4-IN SCREW)	

B - USE AS REQUIRED

<END>

377-1868 HARNESS AS-ENGINE–ECM

S/N: CH91-UP
PART OF 377-1867 WIRING GP-CHASSIS
ALSO AN ATTACHMENT

SMCS-1408 **i05970858**

NOTE	PART NUMBER	QTY	PART NAME 1 2 3 4 5 6 (PRODUCT LEVEL)	SEE PAGE
	122-8912	1	CAP	
	245-1044	2	LOCK-CONNECTOR	
	9X-3401	4	PIN-CONNECTOR (16-GA TO 18-GA)	
			–OR–	
	126-1767	4	PIN-CONNECTOR (14-GA TO 16-GA)	
	155-2270	1	KIT-CONNECTING PLUG (2-PIN)	
			(INCLUDES PLUG AS, WEDGE & INTERFACE SEAL)	
	230-4009	1	PLUG AS-CONNECTOR (12-PIN)	
	455-0709	1	SEAL-CONNECTOR	
	230-4011	1	PLUG AS-CONNECTOR (2-PIN)	
	455-0704	1	SEAL-CONNECTOR	
	230-4013	1	PLUG AS-CONNECTOR (3-PIN)	
	455-0705	1	SEAL-CONNECTOR	
	230-5010	1	PLUG AS-CONNECTOR (6-PIN)	
	455-0707	1	SEAL-CONNECTOR	
	245-1042	1	PLUG AS-CONNECTOR (64-PIN)	
M	**267-7207**	1	BOLT-SPECIAL (M6X1-THD)	
	324-5678	1	RESISTOR AS (120-OHM)	
	264-7029	1	SEAL-CONNECTOR	
	202-4990	1	PLUG-CONNECTOR	
	245-1048	38	PLUG-CONNECTOR (1-PIN)	
	8T-8737	1	PLUG-SEAL	
	102-8802	1	KIT-RECEPTACLE (2-PIN)	
			(INCLUDES RECEPTACLE AS & WEDGE)	
	230-4012	1	RECEPTACLE AS-CONNECTOR (2-PIN)	
	185-1861	2	SEAL-WIRE	
E	**307-2338**		SLEEVE (15-CM)	
	9X-3402	24	SOCKET-CONNECTOR (16-GA TO 18-GA)	
			–OR–	
	126-1768	24	SOCKET-CONNECTOR (14-GA TO 16-GA)	
	267-9572	26	SOCKET-CONNECTION (18-GA)	
	3S-2093	3	STRAP-CABLE	
B	**1P-0810**		TAPE-ELECTRICAL	
	2L-8051	1	TERMINAL-RING (6-GA, 5/16-IN SCREW)	
			–OR–	
	5P-3455	1	TERMINAL-RING (8-GA, 5/16-IN SCREW)	
	2L-8069	1	TERMINAL-RING (2-GA TO 10-GA, 3/8-IN SCREW)	
	2L-8076	1	TERMINAL-RING (14-GA TO 16-GA, NO. 10 SCREW)	
	364-2790	1	TERMINAL AS (10-GA)	
	204-1297	2	TERMINAL AS-BLADE (18-GA TO 20-GA)	
			(EACH INCLUDES)	
	235-4123	1	TERMINAL (18-GA TO 20-GA)	
	2L-8050	1	TERMINAL-RING (6-GA, 1/4-IN SCREW)	
			–OR–	
	2L-8058	1	TERMINAL-RING (8-GA, 1/4-IN SCREW)	
			–OR–	
	2L-8067	1	TERMINAL-RING (10-GA TO 12-GA, 1/4-IN SCREW)	

377-1868 **HARNESS AS-ENGINE (**contd.**)** **i05970858**

NOTE	PART NUMBER	QTY	PART NAME 1 2 3 4 5 6 (PRODUCT LEVEL)	SEE PAGE
E	**125-7874**		TUBE-HEAT SHRINK (5.72-MM DIA) (20-CM)	
E	**125-7875**		TUBE-HEAT SHRINK (7.44-MM DIA) (10-CM)	

B - USE AS REQUIRED
E - ORDER BY THE CENTIMETER
M - METRIC PART

<END>

385-5997 HARNESS AS-ENGINE

S/N: E7A1-UP
PART OF 395-0113 WIRING GP-ENGINE
ALSO AN ATTACHMENT

SMCS-1408 **i07383498**

NOTE	PART NUMBER	QTY	PART NAME 1 2 3 4 5 6 (PRODUCT LEVEL)	SEE PAGE
	377-6932	1	COVER	
E	**292-2896**		CONDUIT (16.9-MM ID) (45-CM)	
	155-2271	3	KIT-CONNECTING PLUG (4-PIN)	
			(EACH INCLUDES PLUG AS, WEDGE, & INTERFACE SEAL)	
	245-1044	2	LOCK-CONNECTOR	
	316-9351	7	MOUNTING-CABLE TIE	
	230-4011	2	PLUG AS-CONNECTOR (2-PIN)	
			(EACH INCLUDES)	
	264-7029	1	SEAL-CONNECTOR	
	238-8245	1	PLUG AS-CONNECTOR (2-PIN)	
	455-0704	1	SEAL-CONNECTOR	
	238-8247	2	PLUG AS-CONNECTOR (2-PIN)	
			(EACH INCLUDES)	
	455-0704	1	SEAL-CONNECTOR	
	245-1043	1	PLUG GP-CONNECTOR (64-PIN)	
	267-7208	1	RING-RETAINING	
	274-4990	1	SEAL	
M	**267-7207**	1	BOLT-SPECIAL (M6X1-THD)	
	281-8804	2	PLUG AS-CONNECTOR (3-PIN)	
			(EACH INCLUDES)	
	455-0705	1	SEAL-CONNECTOR	
	536-7946	1	PLUG AS-CONNECTOR	
	444-7604	2	SOCKET-CONNECTOR	
	536-7945	1	HARNESS AS-WIRING	
	444-7604	3	SOCKET-CONNECTOR	
	245-1048	33	PLUG-CONNECTOR (1-PIN)	
	185-1860	5	SEAL-WIRE	
	267-9572	31	SOCKET-CONNECTION (18-GA)	
	9X-3402	16	SOCKET-CONNECTOR (16-GA TO 18-GA)	
			—OR—	
	126-1768	16	SOCKET-CONNECTOR (14-GA TO 16-GA)	
	217-9039	6	STRAP-CABLE	
	356-1219	1	STRAP-CABLE	
	206-1345	14	STRAP-CABLE	
E	**125-7874**		TUBE-HEAT SHRINK (5.72-MM DIA) (10-CM)	
	194-5226	12	WIRE AS (16-GA)	
			—OR—	
	194-5227	12	WIRE AS (14-GA)	

E - ORDER BY THE CENTIMETER
M - METRIC PART

<END>

359-4769 HARNESS AS-LIGHTING—LICENSE PLATE

S/N: CH91-UP
PART OF 359-4768 MOUNTING GP-REGISTRATION
AN ATTACHMENT

SMCS-1408 **i06236912**

NOTE	PART NUMBER	QTY	PART NAME 1 2 3 4 5 6 (PRODUCT LEVEL)	SEE PAGE
	155-2270	2	KIT-CONNECTING PLUG (2-PIN)	
			(EACH PLUG KIT INCLUDES PLUG AS, WEDGE & INTERFACE SEAL)	
	102-8802	1	KIT-RECEPTACLE (2-PIN)	
			(INCLUDES RECEPTACLE AS & WEDGE)	
	8T-8729	2	PIN-CONNECTOR (16-GA TO 20-GA)	
	8T-8730	4	SOCKET-CONNECTOR (16-GA TO 18-GA)	
E	**125-7874**		TUBE-HEAT SHRINK (5.72-MM DIA) (10-CM)	
E - ORDER BY THE CENTIMETER				
			<END>	

449-0348 HARNESS AS-LIGHTING—CAB FLOODLIGHT

S/N: CH91-UP
PART OF 431-9098 WIRING GP-CAB
ALSO AN ATTACHMENT

SMCS-1408 **i06658072**

NOTE	PART NUMBER	QTY	PART NAME 1 2 3 4 5 6 (PRODUCT LEVEL)	SEE PAGE
	155-2270	1	KIT-CONNECTING PLUG (2-PIN)	
			(INCLUDES PLUG AS, WEDGE & INTERFACE SEAL)	
	9X-3402	2	SOCKET-CONNECTOR (16-GA TO 18-GA)	
			—OR—	
	126-1768	2	SOCKET-CONNECTOR (14-GA TO 16-GA)	
	7Y-3966	1	TERMINAL AS	
	7Y-3962	1	TERMINAL-BULLET (MALE)	
	7Y-3964	1	TUBE	
	7Y-3967	1	TERMINAL AS	
	7Y-3963	1	TERMINAL-BULLET (FEMALE)	
	7Y-3965	1	TUBE	
B	**1P-0810**		TAPE-ELECTRICAL	
B - USE AS REQUIRED				
			<END>	

237-0075 HARNESS AS-SENSOR—TRAVEL SPEED

S/N: CH91-UP
PART OF 377-1899 WIRING GP-STABILIZER
AN ATTACHMENT

SMCS-1408 **i05553955**

NOTE	PART NUMBER	QTY	PART NAME 1 2 3 4 5 6 (PRODUCT LEVEL)	SEE PAGE
	9X-3401	3	PIN-CONNECTOR (16-GA TO 18-GA)	
	102-8803	1	KIT-RECEPTACLE (3-PIN)	
			(INCLUDES RECEPTACLE AS & WEDGE)	
E	**114-8843**		SLEEVE-PLASTIC (25-CM)	
	128-4178	1	TERMINAL AS	
	2L-8068	1	TERMINAL-RING (10-GA TO 12-GA, 5/16-IN SCREW)	
D	**5P-6006**	1	TUBE-HEAT SHRINK (9.52-MM DIA) (0.1-M)	

D - ORDER BY THE METER
E - ORDER BY THE CENTIMETER

<END>

276-8614 HARNESS AS-SENSOR—FAN SPEED

S/N: CH91-UP
PART OF 253-9849 WIRING GP-FAN
ALSO AN ATTACHMENT

SMCS-1408 **i05495153**

NOTE	PART NUMBER	QTY	PART NAME 1 2 3 4 5 6 (PRODUCT LEVEL)	SEE PAGE
	9X-3401	4	PIN-CONNECTOR (16-GA TO 18-GA)	
	155-2271	1	KIT-CONNECTING PLUG (4-PIN)	
			(INCLUDES PLUG AS, WEDGE & INTERFACE SEAL)	
	102-8804	1	KIT-RECEPTACLE (4-PIN)	
			(INCLUDES RECEPTACLE AS & WEDGE)	
	342-4355	1	PLUG AS-CONNECTOR	
E	**114-8843**		SLEEVE-PLASTIC (60-CM)	
	9X-3402	4	SOCKET-CONNECTOR (16-GA TO 18-GA)	
E	**125-7874**		TUBE-HEAT SHRINK (5.72-MM DIA) (10-CM)	

E - ORDER BY THE CENTIMETER

<END>

337-5793 HARNESS AS-SENSOR—RIDE CONTROL

S/N: CH91-UP
PART OF 337-5792 WIRING GP-RIDE CONTROL
AN ATTACHMENT

SMCS-1408 **i05908856**

NOTE	PART NUMBER	QTY	PART NAME 1 2 3 4 5 6 (PRODUCT LEVEL)	SEE PAGE
E	**232-0893**		CONDUIT-FLEXIBLE (6.2-MM ID) (22-CM)	
	9X-3401	8	PIN-CONNECTOR (16-GA TO 18-GA)	
			—OR—	
	126-1767	8	PIN-CONNECTOR (14-GA TO 16-GA)	
	155-2270	3	KIT-CONNECTING PLUG (2-PIN)	
			(EACH PLUG KIT INCLUDES PLUG AS, WEDGE & INTERFACE SEAL)	
	240-7879	2	PLUG AS-CONNECTOR (3-PIN)	
			(EACH INCLUDES)	
	264-7030	1	SEAL-CONNECTOR	
	231-2300	1	RECEPTACLE AS-CONNECTOR (8-PIN)	
	9X-3402	12	SOCKET-CONNECTOR (16-GA TO 18-GA)	
			—OR—	
	126-1768	12	SOCKET-CONNECTOR (14-GA TO 16-GA)	
B	**1P-0810**		TAPE-ELECTRICAL	
E	**125-7874**		TUBE-HEAT SHRINK (5.72-MM DIA) (15-CM)	
E	**319-0755**		TUBE-CONVOLUTED (118-CM)	
	319-3237	2	HOUSING AS-CONNECTOR	

B - USE AS REQUIRED
E - ORDER BY THE CENTIMETER

<END>

364-2786 HARNESS AS-SOLENOID—UNDERCARRIAGE

S/N: CH91-UP
PART OF 377-1899 WIRING GP-STABILIZER
AN ATTACHMENT

SMCS-1408, 1467 **i05536740**

NOTE	PART NUMBER	QTY	PART NAME 1 2 3 4 5 6 (PRODUCT LEVEL)	SEE PAGE
	8T-8729	4	PIN-CONNECTOR (16-GA TO 20-GA)	
	155-2270	4	KIT-CONNECTING PLUG (2-PIN)	
			(EACH INCLUDES PLUG AS, WEDGE & INTERFACE SEAL)	
	102-8804	1	KIT-RECEPTACLE (4-PIN)	
			(INCLUDES RECEPTACLE AS & WEDGE)	
	104-6692	2	RECEPTACLE AS-CONNECTOR (2-PIN)	
			(EACH INCLUDES)	
	8T-8737	2	PLUG-SEAL	
	102-8802	1	KIT-RECEPTACLE (2-PIN)	
			(INCLUDES RECEPTACLE AS & WEDGE)	
	8T-8730	8	SOCKET-CONNECTOR (16-GA TO 18-GA)	
	131-1497	1	TERMINAL AS-RING (10-GA TO 12-GA)	
	2L-8068	1	TERMINAL-RING (10-GA TO 12-GA, 5/16-IN SCREW)	
E	**125-7875**		TUBE-HEAT SHRINK (7.44-MM DIA) (4-CM)	

E - ORDER BY THE CENTIMETER

<END>

375-8407 HARNESS AS-WIRING—INJECTOR

S/N: E7A1-UP
PART OF 395-0113 WIRING GP-ENGINE
ALSO AN ATTACHMENT

SMCS-1408 **i06864939**

NOTE	PART NUMBER	QTY	PART NAME 1 2 3 4 5 6 (PRODUCT LEVEL)	SEE PAGE
	102-8804	1	KIT-RECEPTACLE (4-PIN)	
			(INCLUDES RECEPTACLE AS & WEDGE)	
	113-4630	1	RECEPTACLE AS-CONNECTOR (4-PIN)	
	9X-3401	4	PIN-CONNECTOR (16-GA TO 18-GA)	
			—OR—	
	126-1767	4	PIN-CONNECTOR (14-GA TO 16-GA)	
	332-7865	1	TIE-CABLE	

<END>

354-7270 INSTALLATION AR

S/N: CH91-UP
PART OF 449-2823 COMMON AR
ALSO AN ATTACHMENT

SMCS-7220 **i05934527**

NOTE	PART NUMBER	QTY	PART NAME 1 2 3 4 5 6 (PRODUCT LEVEL)	SEE PAGE
Y	*253-9845*	1	AIR CLEANER GP	69
Y	*275-4912*	1	COUPLING GP-FLEXIBLE	242
Y	*253-9848*	1	DRAIN GP-OIL (ENGINE)	22
Y	*275-4899*	1	GUARD GP-ALTERNATOR	127
Y	*253-9846*	1	LINES GP-AIR	70
Y	*253-9834*	1	MOUNTING GP-ENGINE FLEXIBLE	32

Y - SEPARATE ILLUSTRATION

<END>

290-8448 INSTALLATION AR-SECURITY

S/N: CH91-UP
AN ATTACHMENT

SMCS-7631 **i05522009**

NOTE	PART NUMBER	QTY	PART NAME 1 2 3 4 5 6 (PRODUCT LEVEL)	SEE PAGE
Y	*252-6653*	1	INSTALLATION GP-SECURITY	156
Y	*293-0556*	1	KEY GP-ELECTRONIC	158

Y - SEPARATE ILLUSTRATION

<END>

359-4775 INSTALLATION GP-COMMUNICATION—PRODUCT LINK

S/N: CH91-UP

CANNOT BE USED WITH 12.5-KW GENSET, 15-KW GENSET

AN ATTACHMENT

SMCS-7606 **i06068164**

NOTE	REF NO	GRAPHIC REF	PART NUMBER	QTY	PART NAME 1 2 3 4 5 6 (PRODUCT LEVEL)	SEE PAGE
Y	1	1	**359-4777**	1	HARNESS AS-CONTROL (PRODUCT LINK)	138
	2	1	**364-2788**	1	BRACKET AS	
M		1	**8T-3490**	2	NUT-WELD (M10X1.5-THD)	
	3	1	**364-2797**	1	BRACKET	
	4	1	**193-3973**	1	STRAP-CABLE	
	5	1	**293-9452**	1	MOUNTING-CABLE TIE	
	6	1	**346-9376**	1	ANTENNA AS	
		1	**355-1213**	1	PLUG	
		1	**361-1045**	1	NUT-SPECIAL (5/8-18-THD)	
Y	7	1	**351-8490**	1	CONTROL GP-UNPROGRAMMED (PRODUCT LINK 522)	121
	8	1	**359-4778**	1	CABLE AS-COMMUNICATION	
B	9	1	**3S-2093**	16	STRAP-CABLE	
M	10	1	**5C-9553**	1	BOLT (M6X1X16-MM)	
M	11	1	**7X-2533**	3	BOLT (M6X1X35-MM)	
	12	1	**8C-5608**	4	SPACER (6.5X9.5X25.4-MM THK)	
M	13	1	**8C-8451**	1	BOLT (M6X1X40-MM)	
	14	1	**8T-4121**	2	WASHER-HARD (11X21X2.5-MM THK)	
M	15	1	**8T-4136**	2	BOLT (M10X1.5X25-MM)	
	16	1	**9X-6165**	5	WASHER (6.5X22X2.5-MM THK)	
	17	1	**9X-8256**	1	WASHER (6.6X12X2-MM THK)	
	18	1	**9X-9896**	81	MOUNT (ISOLATION)	
E	19	1	**8C-5064**		CONDUIT-FLEXIBLE (17.75-MM ID, SPLIT) (20-CM)	
F			**260-7652**	1	FILM-WARNING (PRODUCT LINK 300, U.S.)	
					—OR—	
F			**260-7653**	1	FILM-WARNING (EXPLOSION HAZARD, PRODUCT LINK)	
					(INSIDE CAB ON THE RH WINDOW)	
F			**307-0047**	1	FILM-INFORMATION (PRODUCT LINK, READ OMM)	
					(INSIDE CAB ON THE RH WINDOW ABOVE THE WARNING FILM)	

B - USE AS REQUIRED
E - ORDER BY THE CENTIMETER
F - NOT SHOWN
M - METRIC PART
Y - SEPARATE ILLUSTRATION

359-4775 **INSTALLATION GP-COMMUNICATION** (contd.) **i06068164**

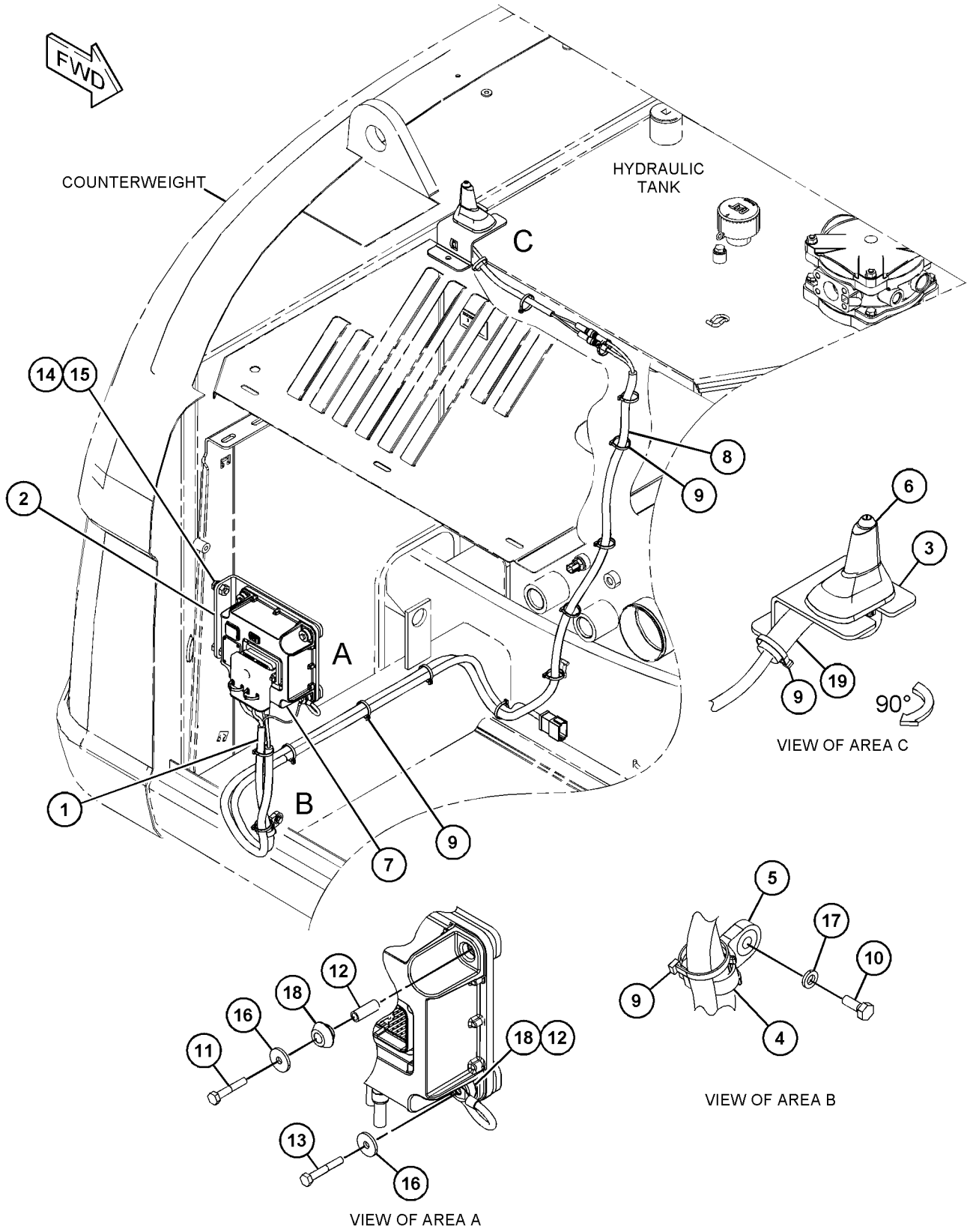

GRAPHIC #1 <END> g03810683

498-5766 INSTALLATION GP-COMMUNICATION—PL641 CELLULAR

S/N: CH91-UP

AN ATTACHMENT

SMCS-7606 **i06881930**

NOTE	REF NO	GRAPHIC REF	PART NUMBER	QTY	PART NAME 1 2 3 4 5 6 (PRODUCT LEVEL)	SEE PAGE
M	1	1	**4Y-1636**	3	SCREW-MACHINE (M4X0.7X10-MM)	
	2	1	**8T-8737**	8	PLUG-SEAL	
YR	3	1	**440-2105**	1	CONTROL GP-ELECTRONIC (PRODUCT LINK ELITE 641 CELLULAR)	118
	4	1	**443-8460**	1	ANTENNA AS	
		1	**361-1045**	1	NUT-SPECIAL (5/8-18-THD)	
	5	1	**498-5768**	1	BRACKET AS	
M		1	**9R-2821**	3	BOSS (M10X1.5X15-MM)	
	6	1	**502-5311**	1	CABLE AS	
B		1	**1P-0810**		TAPE-ELECTRICAL	
	7	1	**503-9590**	1	BRACKET AS	
	8	1	**510-9426**	1	PLATE	
	9	1	**096-2626**	3	CLIP	
	10	1	**114-6658**	1	WASHER (6.5X17X1-MM THK)	
	11	1	**155-2265**	1	KIT-CONNECTING PLUG (8-PIN)	
	12	1	**161-6987**	3	WASHER-HARD (5.2X16X1.5-MM THK)	
M	13	1	**5C-2890**	2	NUT (M6X1-THD)	
	14	1	**8T-4121**	3	WASHER-HARD (11X21X2.5-MM THK)	
M	15	1	**8T-4181**	6	BOLT (M6X1X20-MM)	
M	16	1	**8T-4190**	1	BOLT (M16X2X25-MM)	
M	17	1	**8T-4191**	3	BOLT (M10X1.5X16-MM)	
M	18	1	**8T-4970**	1	BOLT (M6X1X14-MM)	
	19	1	**9X-8256**	6	WASHER (6.6X12X2-MM THK)	
	20	1	**9X-8257**	1	WASHER (17.5X30X3.5-MM THK)	
C	21	1	**3S-2093**	13	STRAP-CABLE	
C	22	1	**7K-1181**	2	STRAP-CABLE	

B - USE AS REQUIRED
C - CHANGE FROM PREVIOUS TYPE
M - METRIC PART
R - REMANUFACTURED PART MAY BE AVAILABLE
Y - SEPARATE ILLUSTRATION

498-5766 **INSTALLATION GP-COMMUNICATION (**contd.**)** **i06881930**

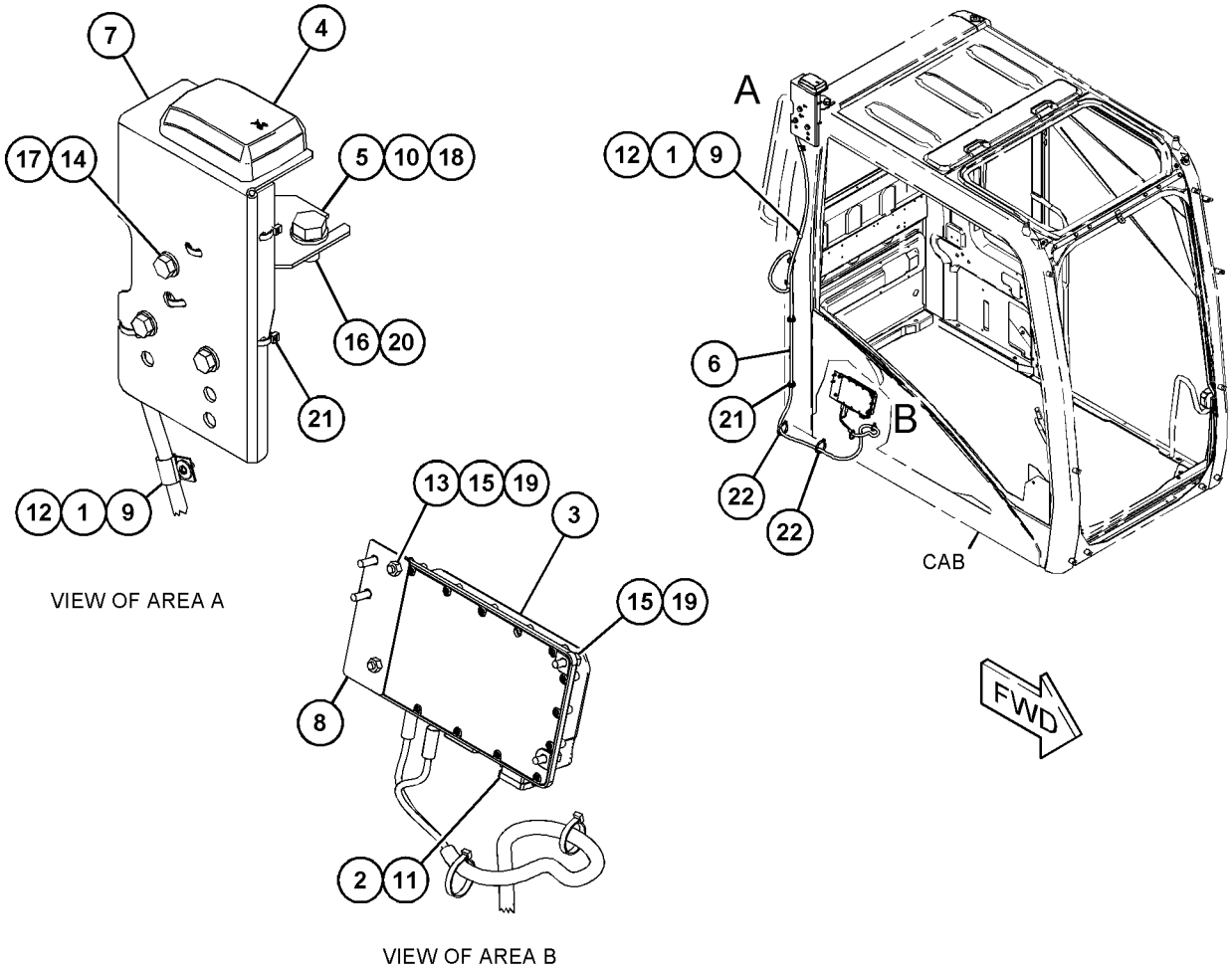

GRAPHIC #1 <END> g06152239

498-5767 INSTALLATION GP-COMMUNICATION—PL641 CELLULAR

S/N: CH91-UP

AN ATTACHMENT

SMCS-7606 **i06881926**

NOTE	REF NO	GRAPHIC REF	PART NUMBER	QTY	PART NAME 1 2 3 4 5 6 (PRODUCT LEVEL)	SEE PAGE
M	1	1	**4Y-1636**	3	SCREW-MACHINE (M4X0.7X10-MM)	
	2	1	**8T-8737**	8	PLUG-SEAL	
	3	1	**443-8460**	1	ANTENNA AS	
		1	**361-1045**	1	NUT-SPECIAL (5/8-18-THD)	
YR	4	1	**480-3535**	1	CONTROL GP-ELECTRONIC (PRODUCT LINK ELITE 641 CELLULAR)	119
	5	1	**498-5768**	1	BRACKET AS	
M		1	**9R-2821**	3	BOSS (M10X1.5X15-MM)	
	6	1	**502-5311**	1	CABLE AS	
B		1	**1P-0810**		TAPE-ELECTRICAL	
	7	1	**503-9590**	1	BRACKET AS	
	8	1	**510-9426**	1	PLATE	
	9	1	**096-2626**	3	CLIP	
	10	1	**114-6658**	1	WASHER (6.5X17X1-MM THK)	
	11	1	**155-2265**	1	KIT-CONNECTING PLUG (8-PIN)	
					(INCLUDES PLUG AS, WEDGE, & INTERFACE SEAL)	
	12	1	**161-6987**	3	WASHER-HARD (5.2X16X1.5-MM THK)	
M	13	1	**5C-2890**	2	NUT (M6X1-THD)	
	14	1	**8T-4121**	3	WASHER-HARD (11X21X2.5-MM THK)	
M	15	1	**8T-4181**	6	BOLT (M6X1X20-MM)	
M	16	1	**8T-4190**	1	BOLT (M16X2X25-MM)	
M	17	1	**8T-4191**	3	BOLT (M10X1.5X16-MM)	
M	18	1	**8T-4970**	1	BOLT (M6X1X14-MM)	
	19	1	**9X-8256**	6	WASHER (6.6X12X2-MM THK)	
	20	1	**9X-8257**	1	WASHER (17.5X30X3.5-MM THK)	
B	21	1	**3S-2093**	13	STRAP-CABLE	
B	22	1	**7K-1181**	2	STRAP-CABLE	

B - USE AS REQUIRED
M - METRIC PART
R - REMANUFACTURED PART MAY BE AVAILABLE
Y - SEPARATE ILLUSTRATION

498-5767 **INSTALLATION GP-COMMUNICATION (**contd.**)** **i06881926**

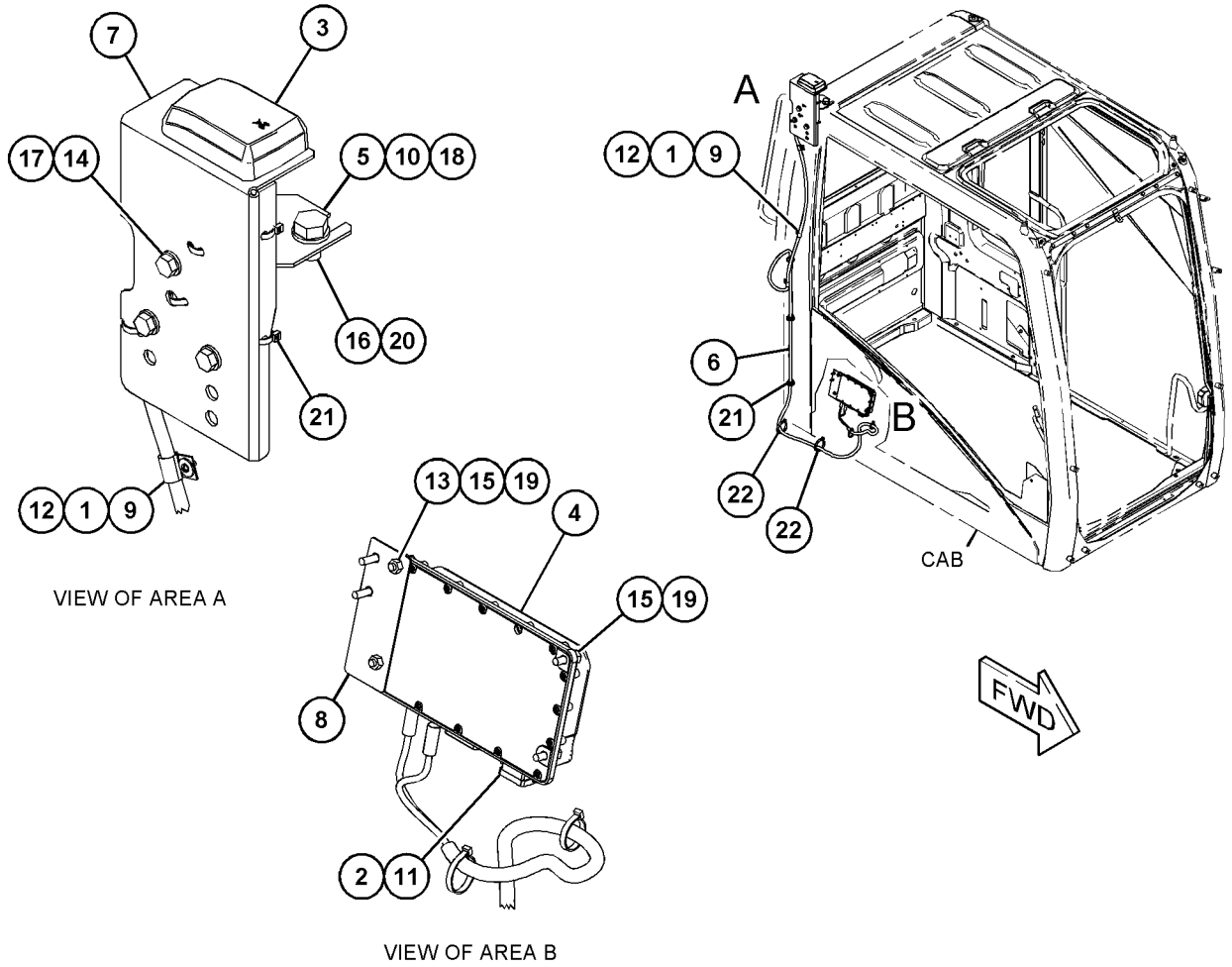

GRAPHIC #1 <END> g06152262

510-9428 INSTALLATION GP-COMMUNICATION—PL631 SATELLITE

S/N: CH91-UP

AN ATTACHMENT

SMCS-7606 **i06881950**

NOTE	REF NO	GRAPHIC REF	PART NUMBER	QTY	PART NAME 1 2 3 4 5 6 (PRODUCT LEVEL)	SEE PAGE
M	1	1	**4Y-1636**	3	SCREW-MACHINE (M4X0.7X10-MM)	
	2	1	**8T-8737**	8	PLUG-SEAL	
YR	3	1	**442-7199**	1	CONTROL GP-UNPROGRAMMED (PRODUCT LINK ELITE 631 SATELLITE)	123
	4	1	**443-8462**	1	ANTENNA AS (CELLULAR)	
		1	**361-1045**	1	NUT-SPECIAL (5/8-18-THD)	
		1	**385-8201**	1	CAP AS-CONNECTOR	
	5	1	*498-5768*	1	BRACKET AS	
M		1	**9R-2821**	3	BOSS (M10X1.5X15-MM)	
		1	**502-1522**	1	BRACKET-CAB	
	6	1	**502-5311**	1	CABLE AS	
	7	1	*503-9590*	1	BRACKET AS	
		1	**502-1521**	1	BRACKET-CAB	
		1	**503-9591**	2	PLATE-CAB	
		1	**503-9592**	1	PLATE-CAB	
	8	1	**510-9426**	1	PLATE	
	9	1	**096-2626**	3	CLIP	
	10	1	**114-6658**	1	WASHER (6.5X17X1-MM THK)	
	11	1	**155-2265**	1	KIT-CONNECTING PLUG (8-PIN)	
					(INCLUDES PLUG AS, WEDGE, & INTERFACE SEAL)	
	12	1	**161-6987**	3	WASHER-HARD (5.2X16X1.5-MM THK)	
M	13	1	**5C-2890**	2	NUT (M6X1-THD)	
	14	1	**8T-4121**	3	WASHER-HARD (11X21X2.5-MM THK)	
M	15	1	**8T-4181**	6	BOLT (M6X1X20-MM)	
M	16	1	**8T-4190**	1	BOLT (M16X2X25-MM)	
M	17	1	**8T-4191**	3	BOLT (M10X1.5X16-MM)	
M	18	1	**8T-4970**	1	BOLT (M6X1X14-MM)	
	19	1	**9X-8256**	6	WASHER (6.6X12X2-MM THK)	
	20	1	**9X-8257**	1	WASHER (17.5X30X3.5-MM THK)	
B	21	1	**3S-2093**	14	STRAP-CABLE	
B	22	1	**7K-1181**	2	STRAP-CABLE	

B - USE AS REQUIRED
M - METRIC PART
R - REMANUFACTURED PART MAY BE AVAILABLE
Y - SEPARATE ILLUSTRATION

510-9428 **INSTALLATION GP-COMMUNICATION (**contd.**)** **i06881950**

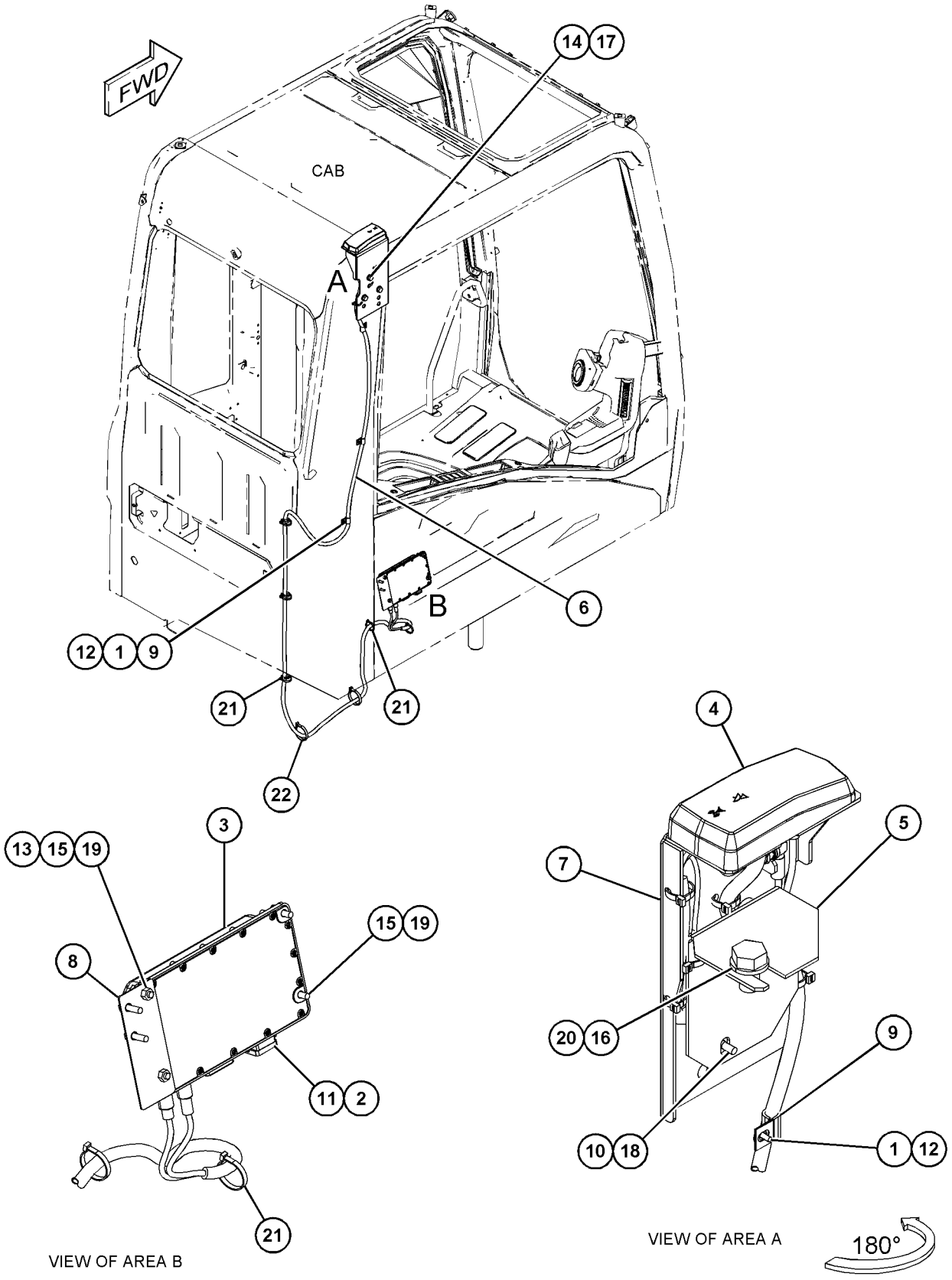

GRAPHIC #1 <END> g06155773

252-6653 INSTALLATION GP-SECURITY

S/N: CH91-UP

PART OF 290-8448 INSTALLATION AR-SECURITY

AN ATTACHMENT

SMCS-7631 **i05527670**

NOTE	REF NO	GRAPHIC REF	PART NUMBER	QTY	PART NAME 1 2 3 4 5 6 (PRODUCT LEVEL)	SEE PAGE
	1		**8C-5608**	2	SPACER (6.5X9.5X25.4-MM THK)	
	2	1	**9X-9896**	4	MOUNT (ISOLATION)	
	3	1	**205-0826**	1	FILM-INSTRUCTION (MACHINE SECURITY, CONSOLE)	
M	4	1	**8T-4171**	1	BOLT (M6X1X12-MM)	
	5	1	*206-5208*	1	COIL AS (EXCITER)	
		1	**102-8802**	1	KIT-RECEPTACLE (2-PIN)	
					(INCLUDES RECEPTACLE AS & WEDGE)	
		1	**198-5389**	1	FILM-IDENTIFICATION (IGNITION SWITCH)	
		1	**200-5125**	1	FILM-IDENTIFICATION (IGNITION SWITCH)	
		1	**205-8257**	1	COIL AS (EXCITER)	
	6	1	**218-0404**	1	MODULE GP-INTERFACE (KEY)	
	7	1	**9X-6165**	5	WASHER (6.5X22X2.5-MM THK)	
	8	1	**252-6654**	1	HARNESS AS-CONTROL (SECURITY)	
		1	**102-8804**	1	KIT-RECEPTACLE (4-PIN)	
					(INCLUDES RECEPTACLE AS & WEDGE)	
		1	**155-2265**	1	KIT-CONNECTING PLUG (8-PIN)	
		1	**155-2270**	1	KIT-CONNECTING PLUG (2-PIN)	
					(EACH PLUG KIT INCLUDES PLUG AS, WEDGE & INTERFACE SEAL)	
	9	1	**261-7641**	1	PLATE AS	
J	10	1	*264-0513*	1	CONFIGURATION-PREMIUM	
B	11	1	**3S-2093**	3	STRAP-CABLE	
M	12	1	**5C-2890**	2	NUT (M6X1-THD)	
M	13		**8C-8451**	2	BOLT (M6X1X40-MM)	

B - USE AS REQUIRED
J - DLR INSTALL CONFIG: SEE IRM: EES03-01
M - METRIC PART

252-6653 **INSTALLATION GP-SECURITY (**contd.**)** **i05527670**

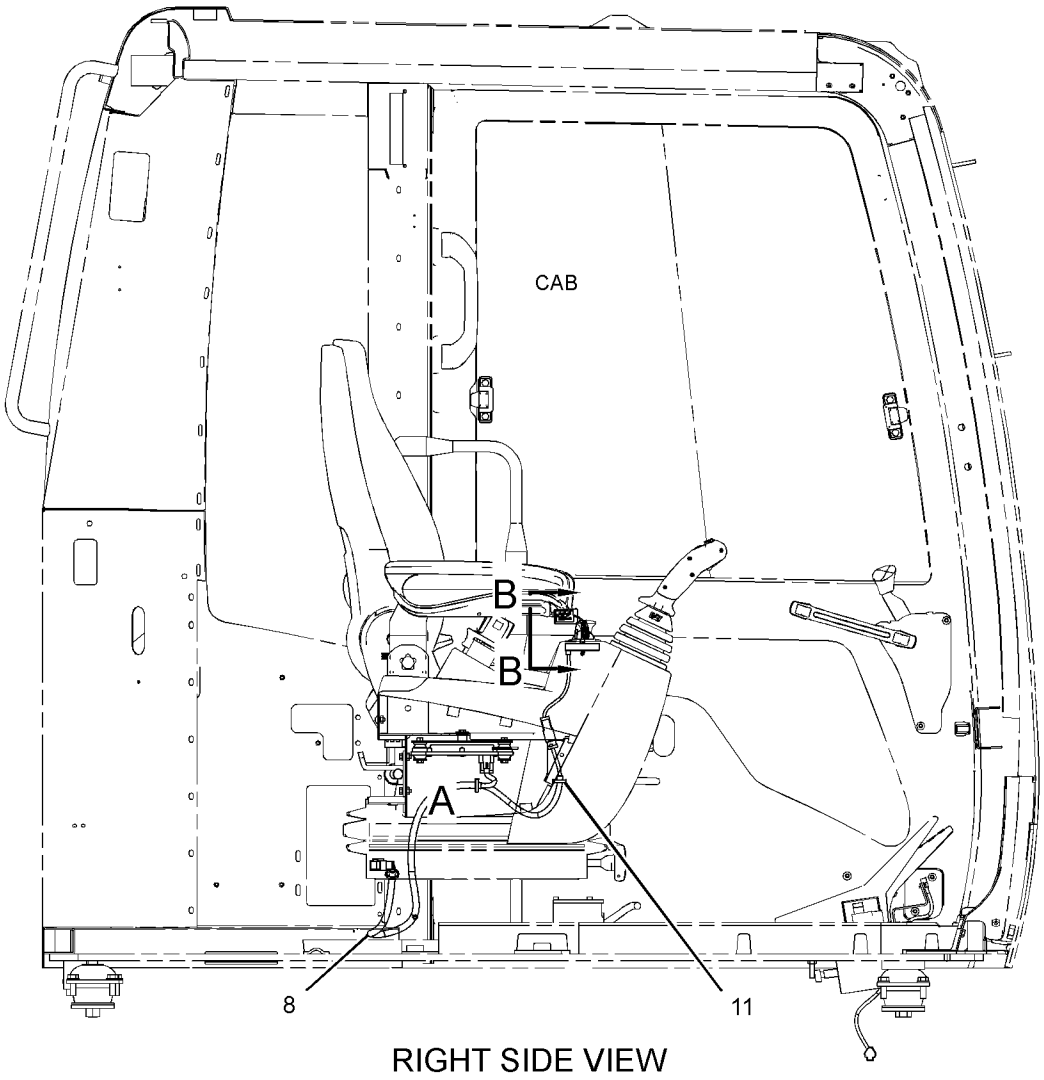

RIGHT SIDE VIEW

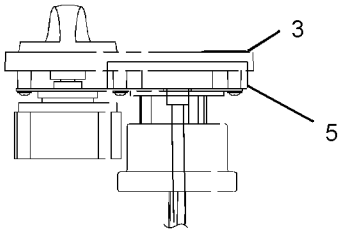

VIEW B-B

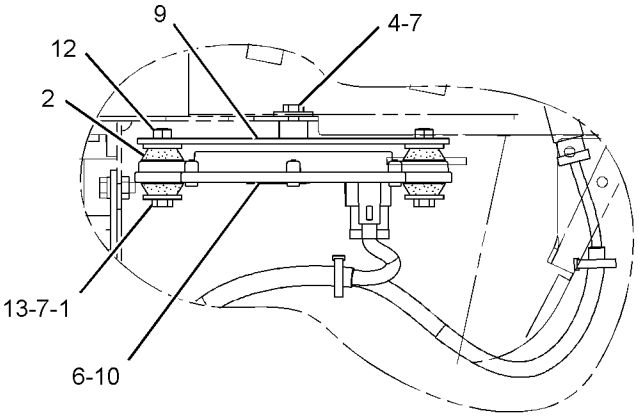

VIEW OF AREA A

GRAPHIC #1 <END> g03086616

293-0556 KEY GP-ELECTRONIC—MACHINE SECURITY SYSTEM

S/N: CH91-UP
PART OF 290-8448 INSTALLATION AR-SECURITY
AN ATTACHMENT

SMCS-7600, 7601 **i06252318**

NOTE	REF NO	GRAPHIC REF	PART NUMBER	QTY	PART NAME 1 2 3 4 5 6 (PRODUCT LEVEL)	SEE PAGE
	1	1	**206-5162**	2	KEY AS-ELECTRONIC (SECURITY)	
	2	1	**099-3629**	2	RING-KEY	

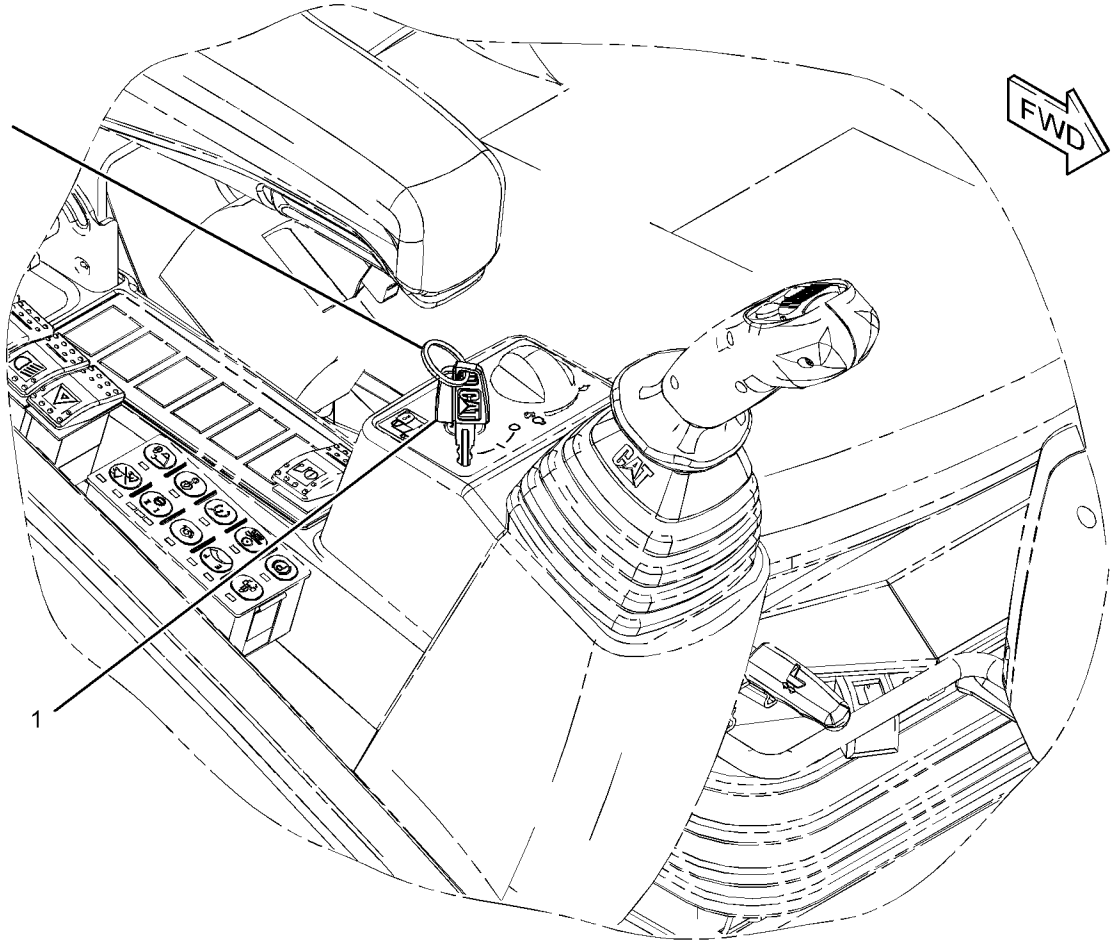

GRAPHIC #1 <END> g03875386

289-7469 LAMP GP-FLOOD

S/N: CH91-UP
24-VOLT, 70-WATT
PART OF 448-9499, 448-9500 LIGHTING GP-FLOOD
ALSO AN ATTACHMENT

SMCS-1434 **i05510249**

NOTE	REF NO	GRAPHIC REF	PART NUMBER	QTY	PART NAME 1 2 3 4 5 6 (PRODUCT LEVEL)	SEE PAGE
	1	1	**8T-8729**	2	PIN-CONNECTOR (16-GA TO 20-GA)	
M	2	1	**3T-0852**	1	LOCKNUT (M8X1.25-THD)	
	3	1	**5W-5049**	1	WASHER (8.4X15X0.8-MM THK)	
M	4	1	**6V-7744**	1	LOCKNUT (M10X1.5-THD)	
	5	1	**7X-0796**	1	LOCKWASHER (10.2X18.4X2.5-MM THK)	
	6	1	**102-8802**	1	KIT-RECEPTACLE (2-PIN)	
					(INCLUDES RECEPTACLE AS & WEDGE)	
F			**9X-3463**	1	LAMP-HALOGEN (24-VOLT, 70-WATT) (FLOODLIGHT)	

F - NOT SHOWN
M - METRIC PART

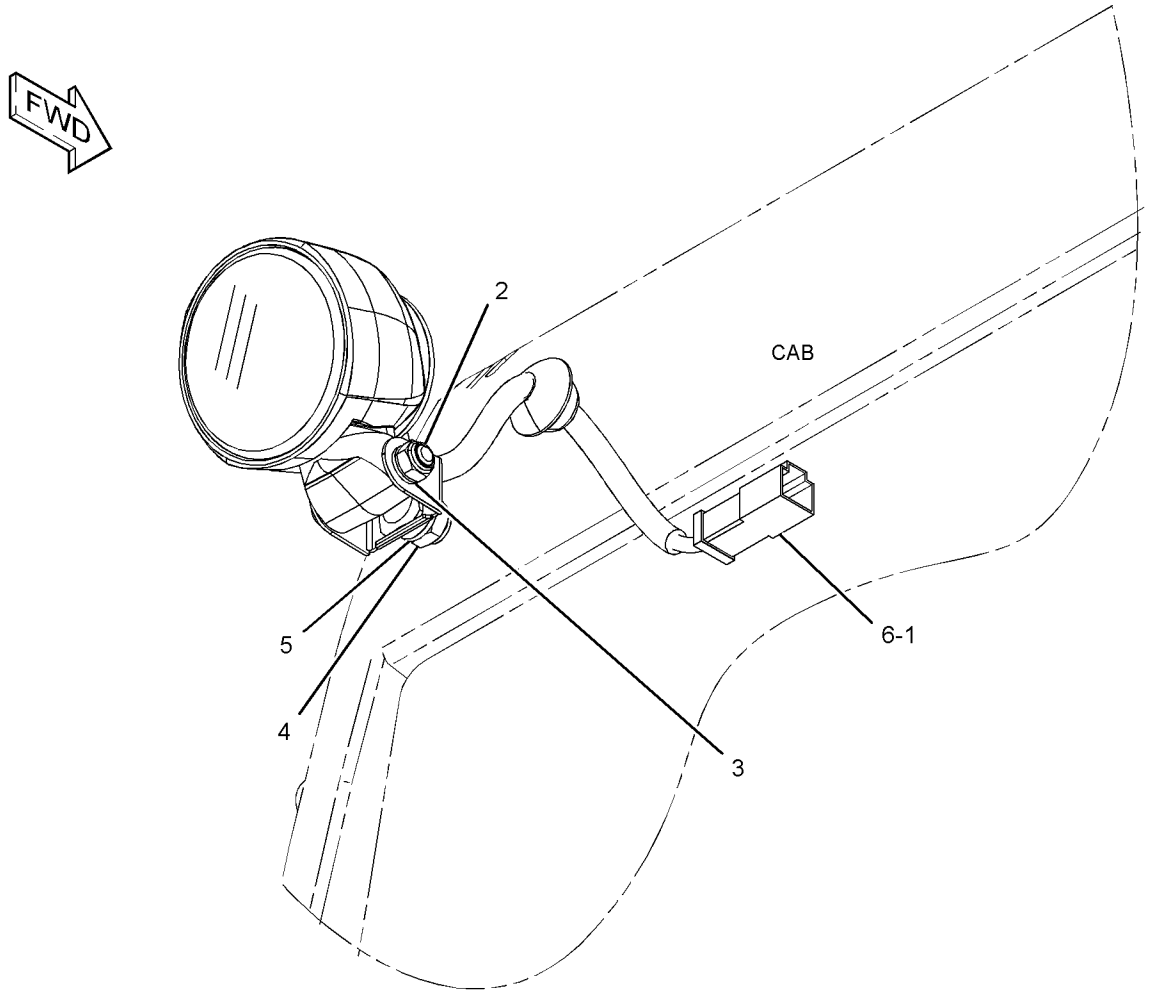

GRAPHIC #1 <END> g01402456

325-4471 LAMP GP-FLOOD

S/N: CH91-192
24-VOLT
PART OF 448-9499 LIGHTING GP-FLOOD
ALSO AN ATTACHMENT

SMCS-1434 **i07189813**

NOTE	REF NO	GRAPHIC REF	PART NUMBER	QTY	PART NAME 1 2 3 4 5 6 (PRODUCT LEVEL)	SEE PAGE
	1	1	**175-4291**	1	BRACKET AS	
M	2	1	**9X-4244**	2	SCREW-SPECIAL (M4X1.79X25-MM)	
	3	1	**351-9918**	1	LAMP-HALOGEN (24-VOLT, 70-WATT) (FLOODLIGHT)	
	4	1	**8T-4224**	1	WASHER-HARD (8.8X16X2-MM THK)	
M	5	1	**8T-7547**	1	BOLT (M8X1.25X30-MM)	
M	6	1	**5C-7261**	1	NUT (M8X1.25-THD)	

M - METRIC PART

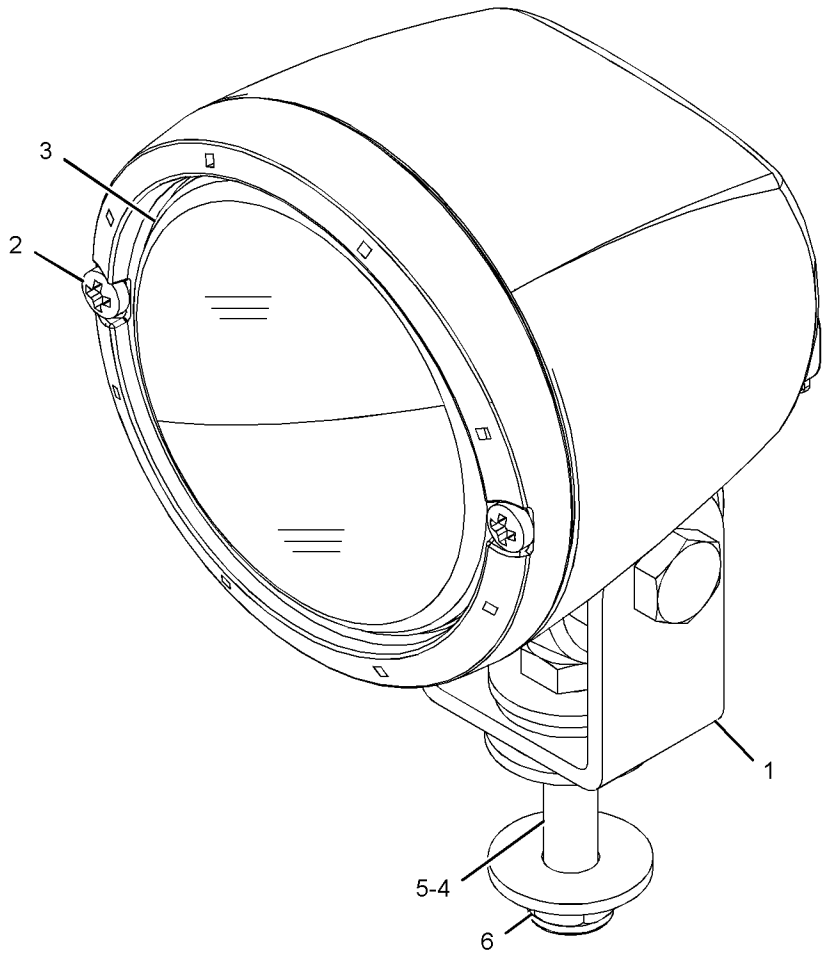

GRAPHIC #1 <END> g02097194

339-3505 LAMP GP-FLOOD

S/N: CH91-UP
24-VOLT
PART OF 337-5789, 448-9500 LIGHTING GP-FLOOD
AN ATTACHMENT

SMCS-1434 **i06053273**

NOTE	REF NO	GRAPHIC REF	PART NUMBER	QTY	PART NAME 1 2 3 4 5 6 (PRODUCT LEVEL)	SEE PAGE
	1	1	**175-4291**	1	BRACKET AS	
M	2	1	**9X-4244**	2	SCREW-SPECIAL (M4X1.79X25-MM)	
	3	1	**351-9918**	1	LAMP-HALOGEN (24-VOLT, 70-WATT)	
	4	1	**8T-4224**	1	WASHER-HARD (8.8X16X2-MM THK)	
M	5	1	**8T-7547**	1	BOLT (M8X1.25X30-MM)	
M	6	1	**5C-7261**	1	NUT (M8X1.25-THD)	

M - METRIC PART

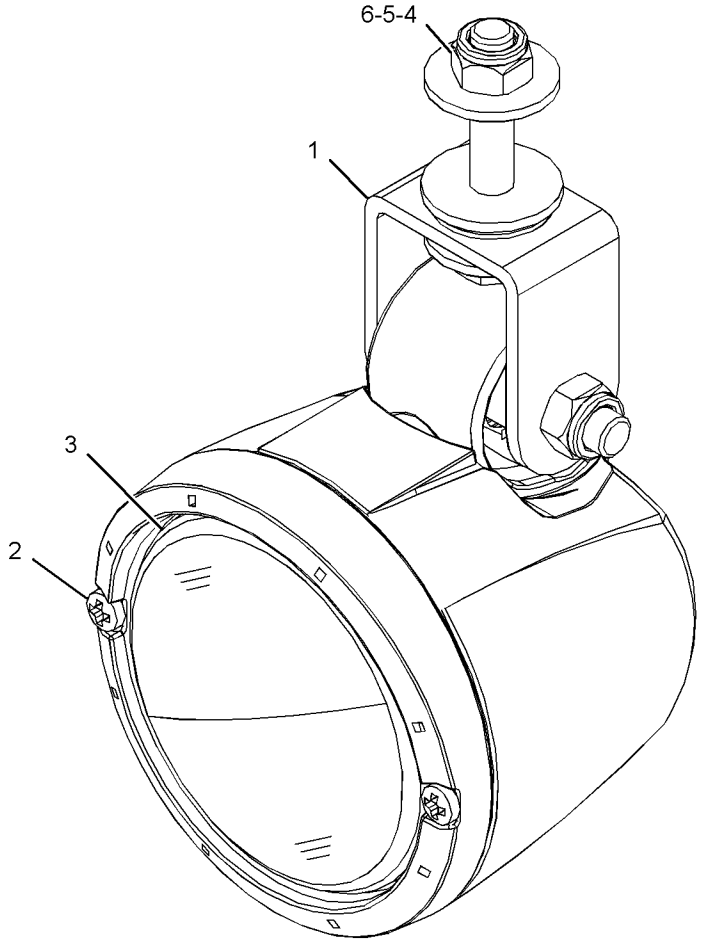

GRAPHIC #1 <END> g02098634

539-1039 LAMP GP-FLOOD

S/N: CH9193-UP
24-VOLT
PART OF 448-9499 LIGHTING GP-FLOOD
ALSO AN ATTACHMENT

SMCS-1434 **i07603351**

NOTE	REF NO	GRAPHIC REF	PART NUMBER	QTY	PART NAME 1 2 3 4 5 6 (PRODUCT LEVEL)	SEE PAGE
	1	1	**175-4291**	1	BRACKET AS (MOUNTING)	
M	2	1	**9X-4244**	2	SCREW-SPECIAL (M4X1.79X25-MM)	
	3	1	**351-9918**	1	LAMP-HALOGEN (24-VOLT, 70-WATT)	
	4	1	**8T-4224**	1	WASHER-HARD (8.8X16X2-MM THK)	
M	5	1	**8T-7547**	1	BOLT (M8X1.25X30-MM)	
M	6	1	**5C-7261**	1	NUT (M8X1.25-THD)	

M - METRIC PART

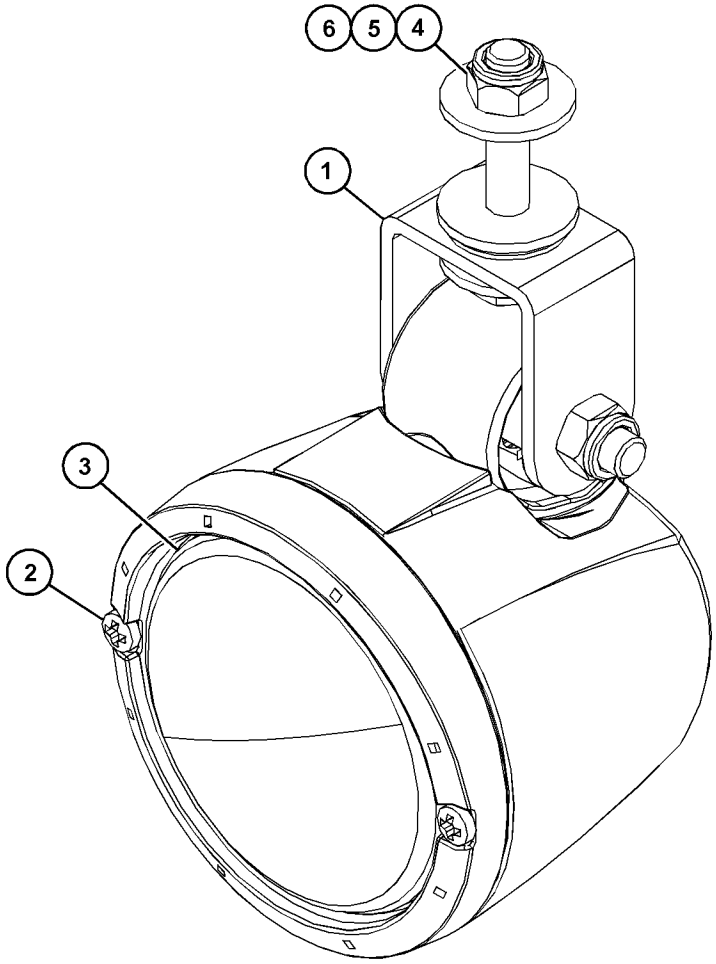

GRAPHIC #1 <END> g06423304

252-6642 LAMP GP-HEAD & SIGNAL—FRONT, LH

S/N: CH91-UP
PART OF 288-8649 LIGHTING GP-ROADING
ALSO AN ATTACHMENT

SMCS-1429, 1430 **i05496559**

NOTE	REF NO	GRAPHIC REF	PART NUMBER	QTY	PART NAME 1 2 3 4 5 6 (PRODUCT LEVEL)	SEE PAGE
	1	1	**209-4853**	1	LAMP (24-VOLT, 4-WATT) (HEADLIGHT)	
	2	1	**211-7560**	1	LAMP (24-VOLT, 75/70-WATT) (HEADLIGHT)	
	3	1	**242-0588**	1	LAMP-TURN SIGNAL (24-VOLT, 21-WATT) (AMBER)	
	4	1	**281-1521**	1	REFLECTOR AS	
	5	1	**281-1522**	1	LENS-GLASS (FRONT, LH)	
	6	1	**281-1524**	1	LENS-GLASS (REAR, LH)	
M	7	1	**6V-8149**	1	NUT (M12X1.75-THD)	
	8	1	**3E-4988**	1	LOCKWASHER	
	9	1	**7X-0622**	1	WASHER (13X24X2.5-MM THK)	

M - METRIC PART

252-6642 **LAMP GP-HEAD & SIGNAL (**contd.**)** **i05496559**

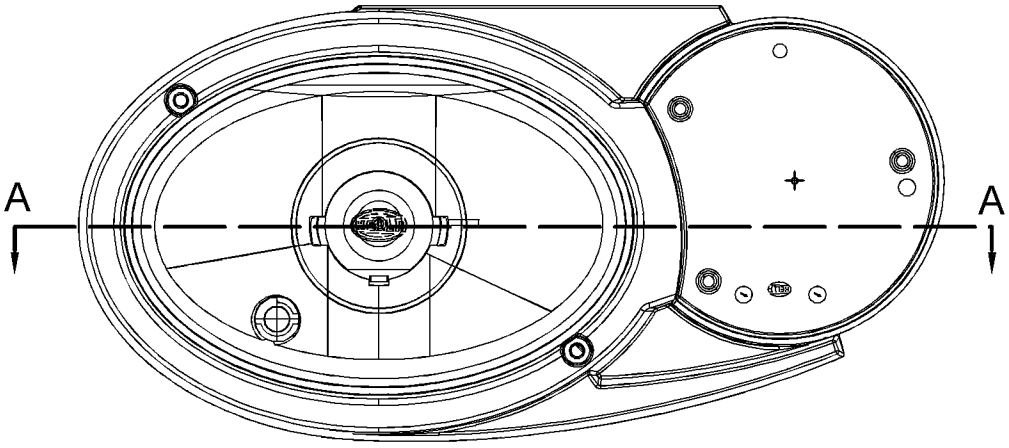

FRONT VIEW

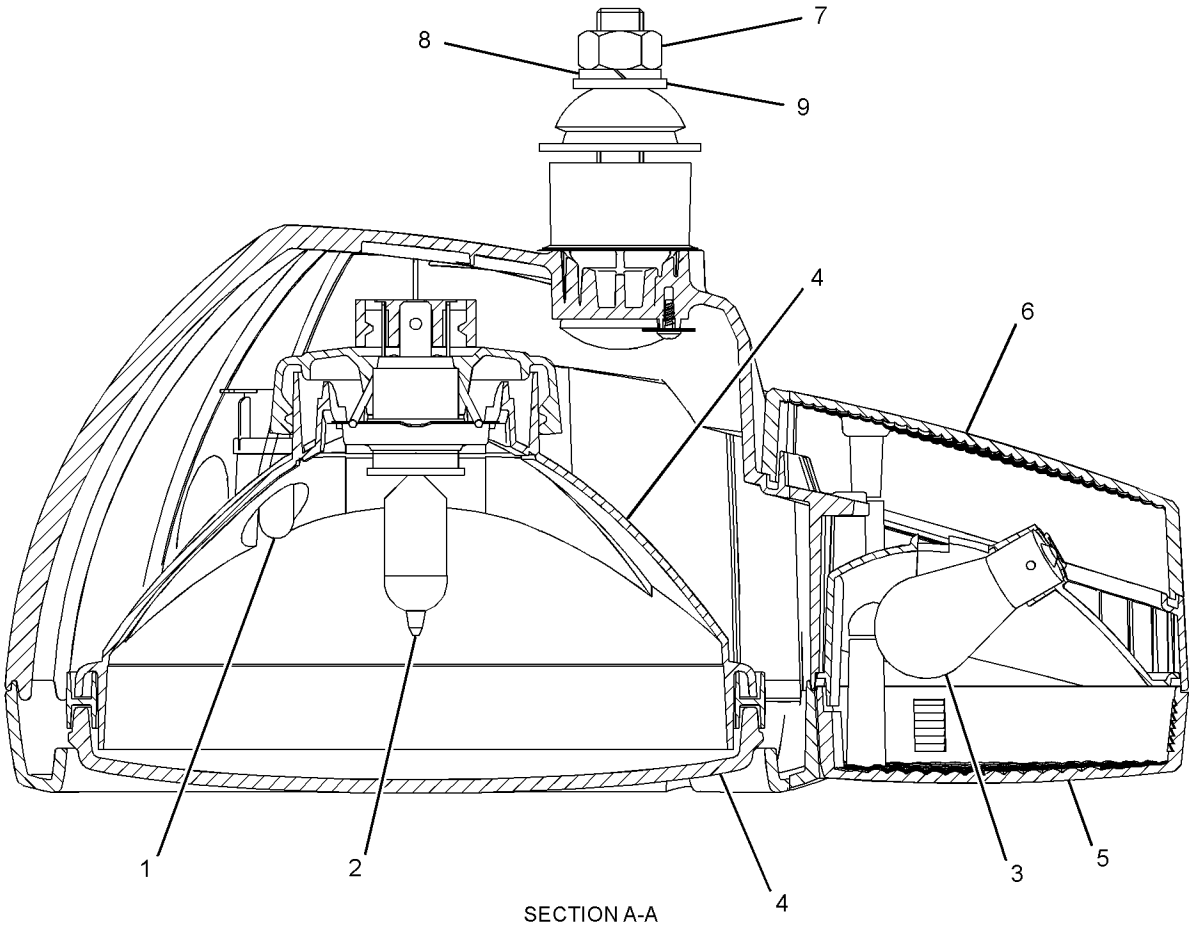

SECTION A-A

GRAPHIC #1 <END> g01402141

252-6643 LAMP GP-HEAD & SIGNAL—FRONT, RH

S/N: CH91-UP
PART OF 288-8649 LIGHTING GP-ROADING
ALSO AN ATTACHMENT

SMCS-1429, 1430 **i05496560**

NOTE	REF NO	GRAPHIC REF	PART NUMBER	QTY	PART NAME 1 2 3 4 5 6 (PRODUCT LEVEL)	SEE PAGE
	1	1	**209-4853**	1	LAMP (24-VOLT, 4-WATT) (HEADLIGHT)	
	2	1	**211-7560**	1	LAMP (24-VOLT, 75/70-WATT) (HEADLIGHT)	
	3	1	**242-0588**	1	LAMP-TURN SIGNAL (24-VOLT, 21-WATT) (AMBER)	
	4	1	**281-1521**	1	REFLECTOR AS	
	5	1	**281-1523**	1	LENS-GLASS (FRONT, RH)	
	6	1	**281-1526**	1	LENS-GLASS (REAR, RH)	
M	7	1	**6V-8149**	1	NUT (M12X1.75-THD)	
	8	1	**3E-4988**	1	LOCKWASHER	
	9	1	**7X-0622**	1	WASHER (13X24X2.5-MM THK)	

M - METRIC PART

252-6643 **LAMP GP-HEAD & SIGNAL (**contd.**)** **i05496560**

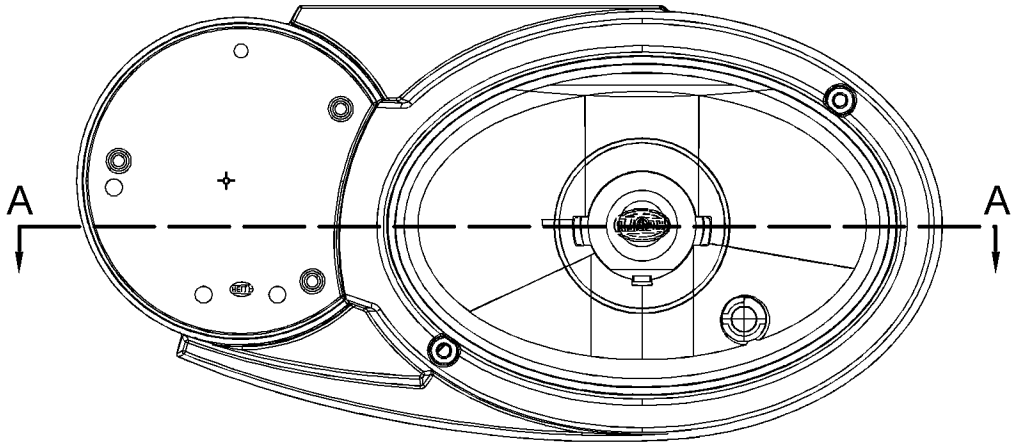

FRONT VIEW

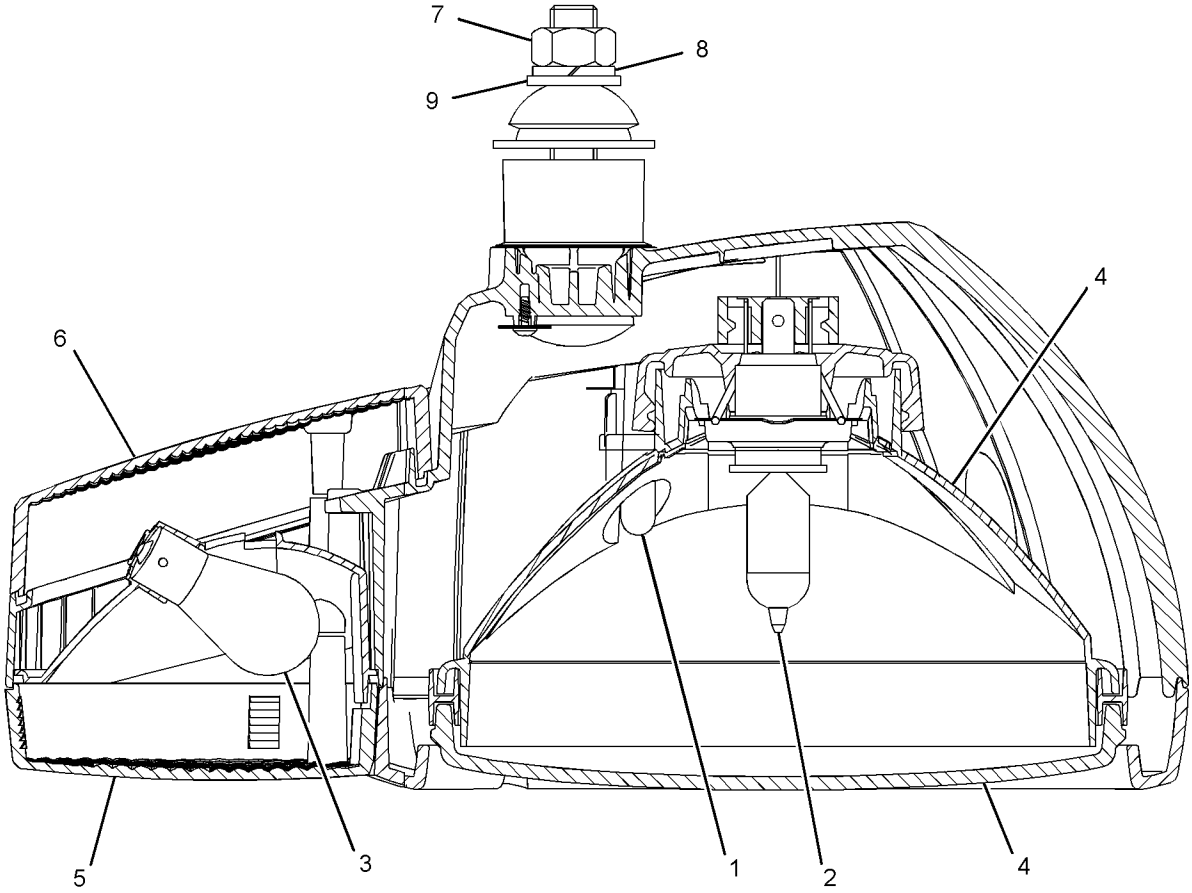

SECTION A-A

GRAPHIC #1 <END> g01402147

259-0134 LAMP GP-REGISTRATION PLATE

S/N: CH91-UP
24-VOLT
PART OF 359-4768 MOUNTING GP-REGISTRATION
AN ATTACHMENT

SMCS-1429 **i05514701**

NOTE	REF NO	GRAPHIC REF	PART NUMBER	QTY	PART NAME 1 2 3 4 5 6 (PRODUCT LEVEL)	SEE PAGE
	1	1	**5C-9583**	1	LAMP (24-VOLT, 5-WATT) (REGISTRATION PLATE)	
	2	1	**102-8802**	1	KIT-RECEPTACLE (2-PIN)	
					(INCLUDES RECEPTACLE AS & WEDGE)	
	3	1	**8T-8729**	2	PIN-CONNECTOR (16-GA TO 20-GA)	

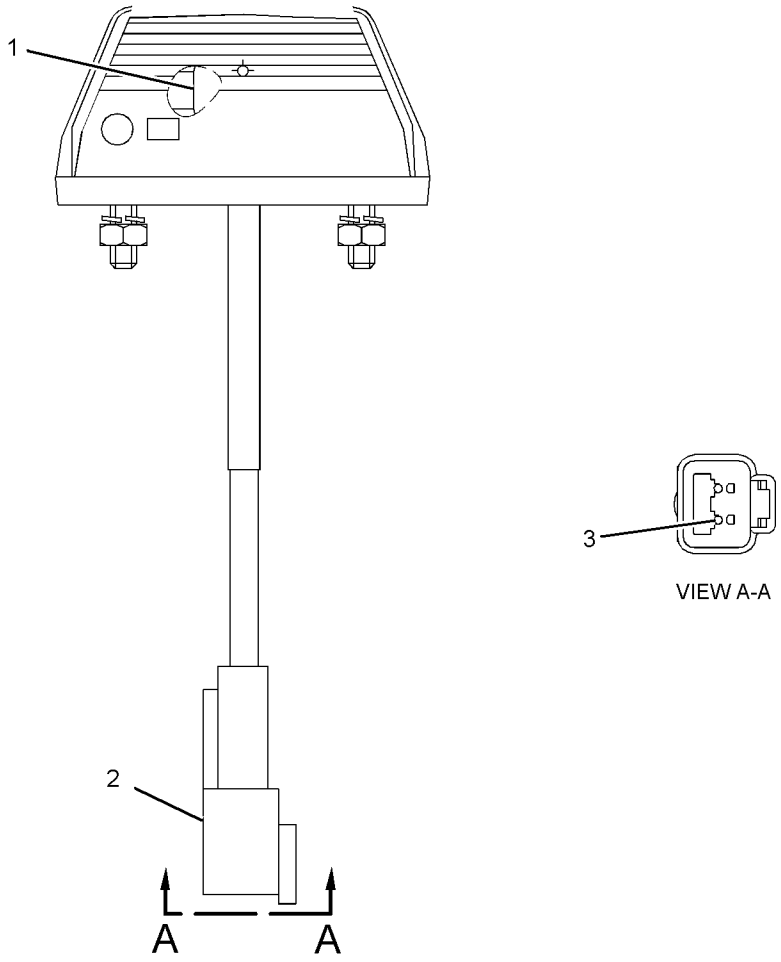

GRAPHIC #1 <END> g01201568

108-1029 LAMP GP-WARNING BEACON–AMBER

S/N: CH91-UP
24-VOLT
PART OF 453-8185, 473-2841, 517-3262 DISTRIBUTION AR
AN ATTACHMENT

SMCS-1431 **i03043951**

NOTE	REF NO	GRAPHIC REF	PART NUMBER	QTY	PART NAME 1 2 3 4 5 6 (PRODUCT LEVEL)	SEE PAGE
	1	1	**272-9800**	1	LENS (AMBER)	
	2	1	**9X-7849**	1	LAMP (24-VOLT, 70-WATT) (WARNING BEACON)	
	3	1	**9X-8139**	1	BELT-DRIVE	
	4	1	**9R-7958**	1	CORD AS (WARNING BEACON)	
	4A	1	**9R-7942**	1	PLUG AS	

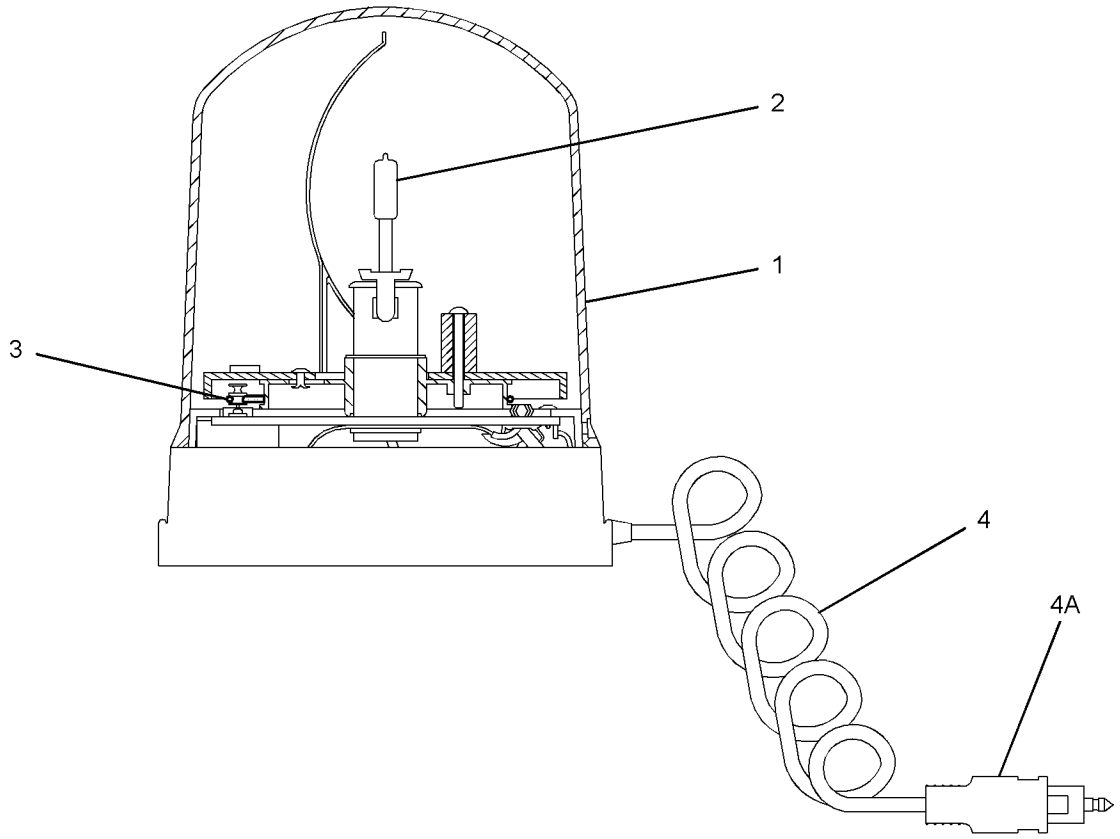

GRAPHIC #1 <END> g01251578

337-5789 LIGHTING GP-FLOOD–BOOM

S/N: CH91-UP
PART OF 425-9130, 446-2727 BOOM AR
AN ATTACHMENT

SMCS-1434 **i05873495**

NOTE	REF NO	GRAPHIC REF	PART NUMBER	QTY	PART NAME 1 2 3 4 5 6 (PRODUCT LEVEL)	SEE PAGE
	1	1	**337-5790**	1	HARNESS AS-LIGHTING	
		1	**102-8802**	1	KIT-RECEPTACLE (2-PIN)	
					(INCLUDES RECEPTACLE AS & WEDGE)	
		1	**9W-0844**	2	SOCKET-CONNECTOR (14-GA TO 16-GA)	
		1	**9W-0852**	2	PIN-CONNECTOR (14-GA TO 16-GA)	
		1	**155-2270**	1	KIT-CONNECTING PLUG (2-PIN)	
					(INCLUDES PLUG AS, WEDGE & INTERFACE SEAL)	
E		1	**197-3800**		LOOM (375-CM)	
Y	2	1	**339-3505**	1	LAMP GP-FLOOD (24-VOLT)	161
B	3	1	**3S-2093**	16	STRAP-CABLE	

B - USE AS REQUIRED
E - ORDER BY THE CENTIMETER
Y - SEPARATE ILLUSTRATION

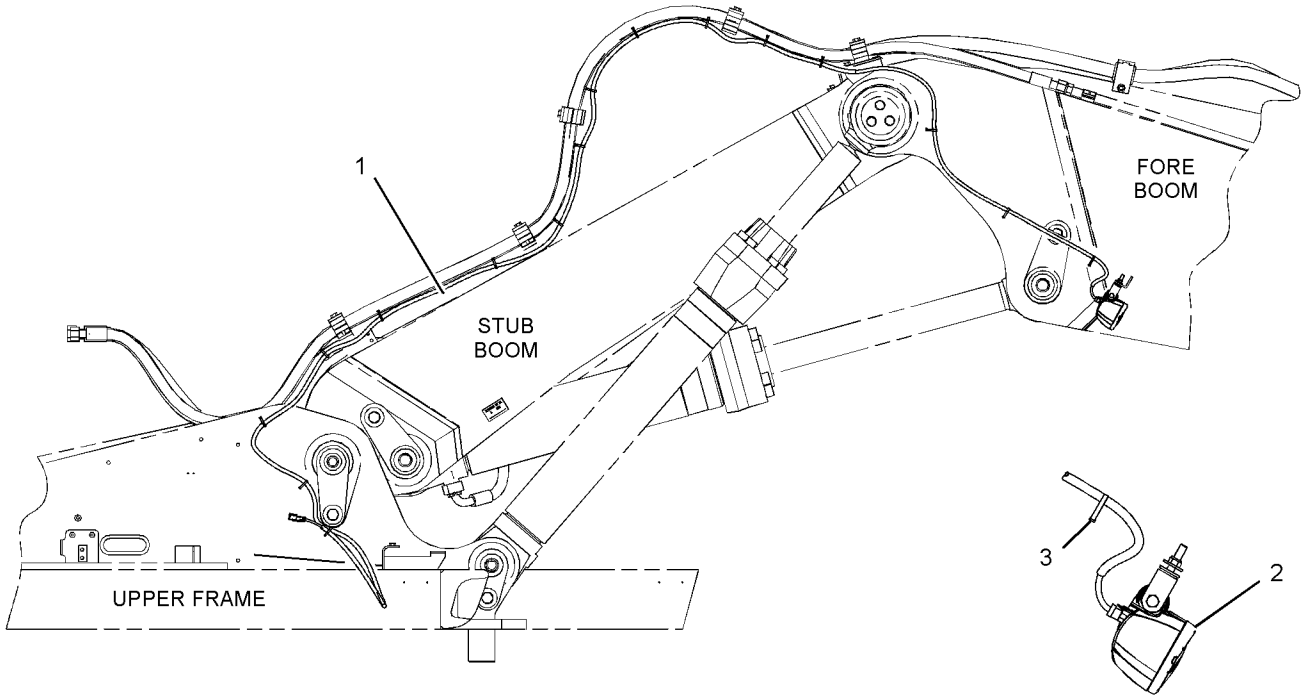

RIGHT SIDE VIEW

VIEW OF AREA A

GRAPHIC #1 <END> g02731860

448-9499 LIGHTING GP-FLOOD–CAB

S/N: CH91-192
PART OF 396-6834 CAB AR
ALSO AN ATTACHMENT

SMCS-1434 **i05525876**

NOTE	REF NO	GRAPHIC REF	PART NUMBER	QTY	PART NAME 1 2 3 4 5 6 (PRODUCT LEVEL)	SEE PAGE
Y	1	1	**289-7469**	1	LAMP GP-FLOOD (24-VOLT, 70-WATT) (CAB, REAR)	159
Y	2	1	**325-4471**	1	LAMP GP-FLOOD (12-VOLT) (CAB FRONT, LH)	160
Y	2A	1	**325-4471**	1	LAMP GP-FLOOD (12-VOLT) (CAB FRONT, RH)	160
	3	1	**345-7835**	2	BOLT (M16X2X20-MM)	
	4	1	**9X-8257**	4	WASHER (17.5X30X3.5-MM THK)	

Y - SEPARATE ILLUSTRATION

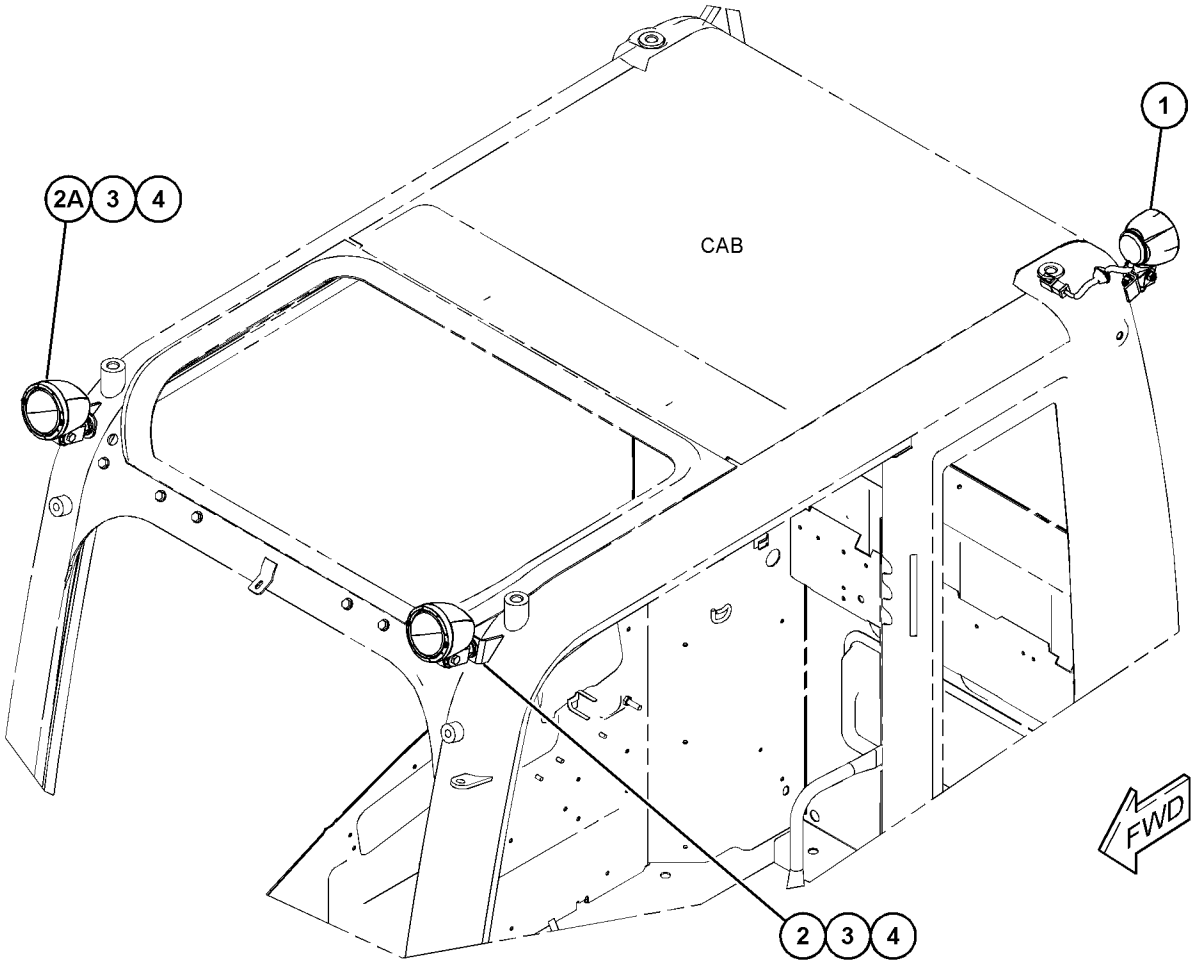

GRAPHIC #1 <END> g03501169

448-9499 LIGHTING GP-FLOOD—CAB

S/N: CH9193-UP
PART OF 396-6834 CAB AR
ALSO AN ATTACHMENT

SMCS-1434 **i07582750**

NOTE	REF NO	GRAPHIC REF	PART NUMBER	QTY	PART NAME 1 2 3 4 5 6 (PRODUCT LEVEL)	SEE PAGE
Y	1	1	**289-7469**	1	LAMP GP-FLOOD (24-VOLT, 70-WATT) (CAB, REAR)	159
CY	2	1	**539-1039**	1	LAMP GP-FLOOD (24-VOLT) (CAB FRONT, LH)	162
CY	2A	1	**539-1039**	1	LAMP GP-FLOOD (24-VOLT) (CAB FRONT, RH)	162
	3	1	**345-7835**	2	BOLT (M16X2X20-MM)	
	4	1	**9X-8257**	4	WASHER (17.5X30X3.5-MM THK)	

C - CHANGE FROM PREVIOUS TYPE
Y - SEPARATE ILLUSTRATION

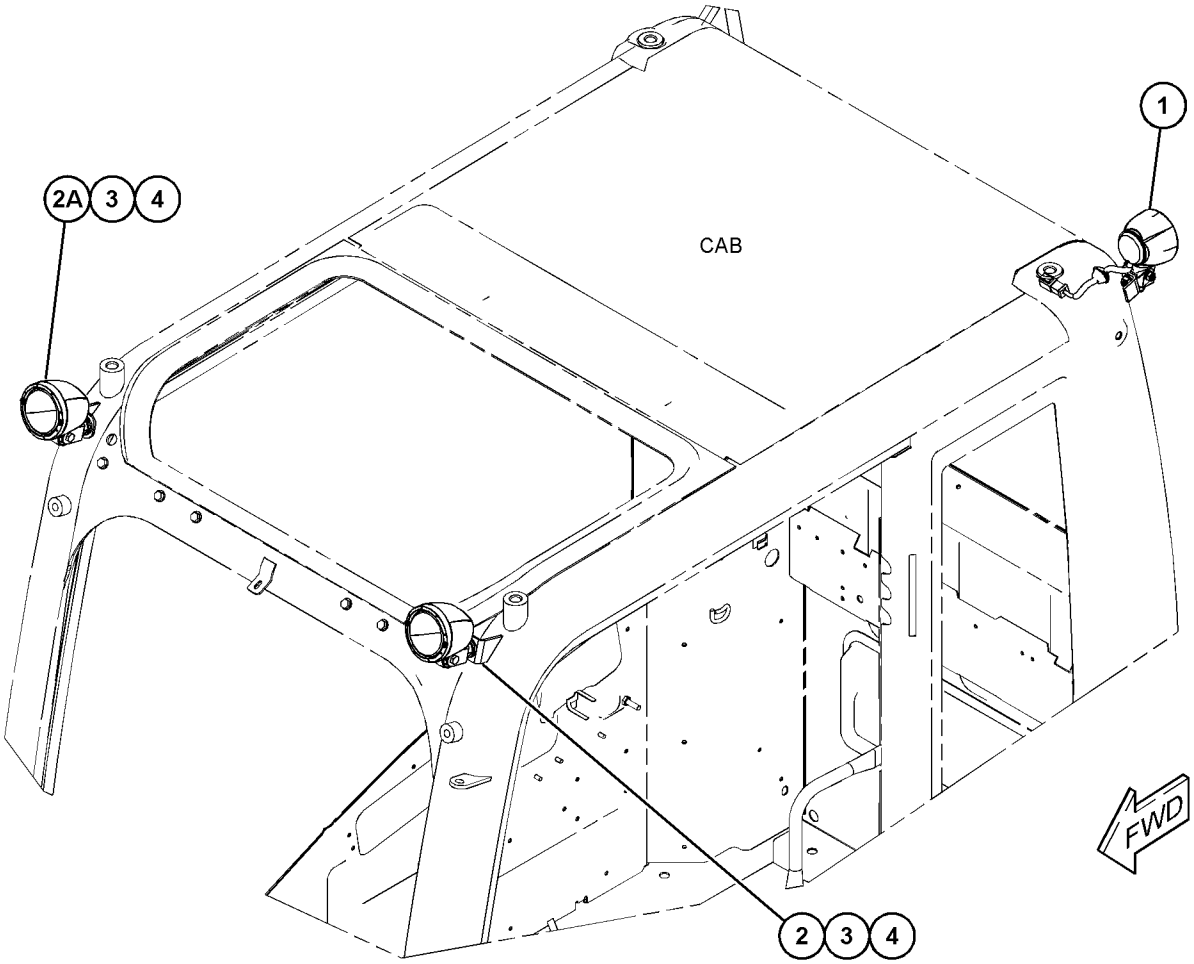

GRAPHIC #1 <END> g03501169

448-9500 LIGHTING GP-FLOOD—CAB GUARD

S/N: CH91-UP

PART OF 417-9966 GUARD AR-FOG LIGHTS, 461-4392 GUARD AR-OVERHEAD AN ATTACHMENT

SMCS-1434 **i05525877**

NOTE	REF NO	GRAPHIC REF	PART NUMBER	QTY	PART NAME 1 2 3 4 5 6 (PRODUCT LEVEL)	SEE PAGE
	1	1	**116-0118**	2	CLIP	
Y	2	1	**289-7469**	1	LAMP GP-FLOOD (24-VOLT, 70-WATT) (CAB, REAR)	159
Y	3	1	**339-3505**	2	LAMP GP-FLOOD (24-VOLT) (CAB FRONT)	161
	4	1	**375-0498**	2	HARNESS AS-FRONT LIGHTING	
					(EACH INCLUDES)	
		1	**8T-8729**	2	PIN-CONNECTOR (16-GA TO 20-GA)	
		1	**155-2270**	1	KIT-CONNECTING PLUG (2-PIN)	
					(INCLUDES PLUG AS, WEDGE & INTERFACE SEAL)	
		1	**102-8802**	1	KIT-RECEPTACLE (2-PIN)	
					(INCLUDES RECEPTACLE AS & WEDGE)	
		1	**8T-8730**	2	SOCKET-CONNECTOR (16-GA TO 18-GA)	
M	5	1	**5C-7261**	2	NUT (M8X1.25-THD)	
	6	1	**8T-4121**	1	WASHER-HARD (11X21X2.5-MM THK)	
M	7	1	**8T-4136**	1	BOLT (M10X1.5X25-MM)	
	8	1	**8T-4224**	4	WASHER-HARD (8.8X16X2-MM THK)	
M	9	1	**8T-7547**	2	BOLT (M8X1.25X30-MM)	

M - METRIC PART
Y - SEPARATE ILLUSTRATION

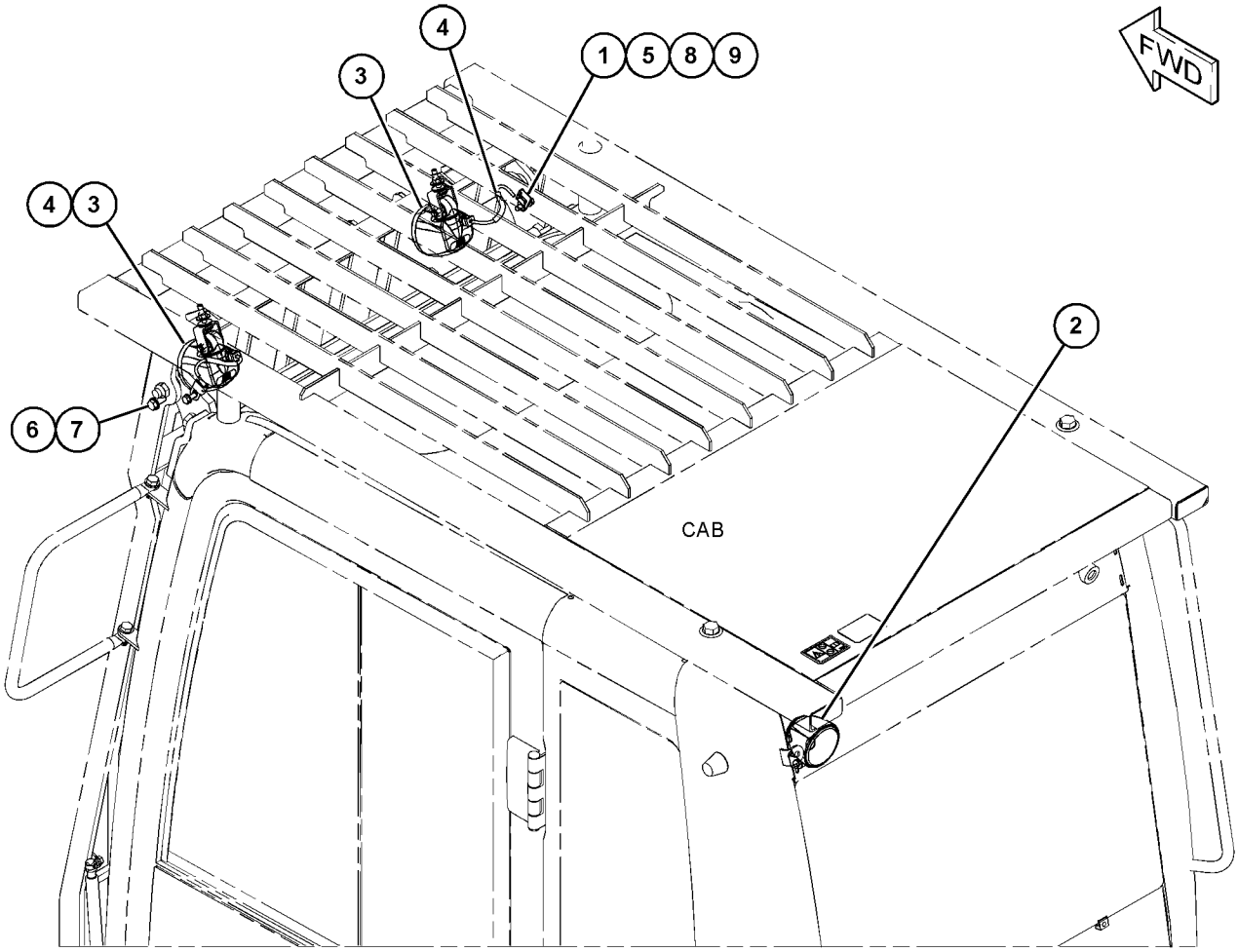

GRAPHIC #1 <END> g03501160

288-8649 LIGHTING GP-ROADING—LED

S/N: CH91-UP
PART OF 396-4423 ELECTRICAL AR
ALSO AN ATTACHMENT

SMCS-1429 **i05934484**

NOTE	REF NO	GRAPHIC REF	PART NUMBER	QTY	PART NAME 1 2 3 4 5 6 (PRODUCT LEVEL)	SEE PAGE
Y	1	1	**252-6642**	1	LAMP GP-HEAD & SIGNAL (FRONT, LH)	163
Y	2	1	**252-6643**	1	LAMP GP-HEAD & SIGNAL (FRONT, RH)	165
	3	1	**288-8631**	2	LAMP GP-SIGNAL (LED, REAR)	
D	4	1	**5P-5926**		SEAL (0.2-M EACH)	
M	5	1	**7Y-7388**	4	SCREW-BUTTON HEAD (M5X0.8X12-MM)	
	6	1	**288-8632**	1	SWITCH AS-MAGNETIC (HAZARD FLASHER RELAY)	

D - ORDER BY THE METER
M - METRIC PART
Y - SEPARATE ILLUSTRATION

288-8649 **LIGHTING GP-ROADING (**contd.**)** **i05934484**

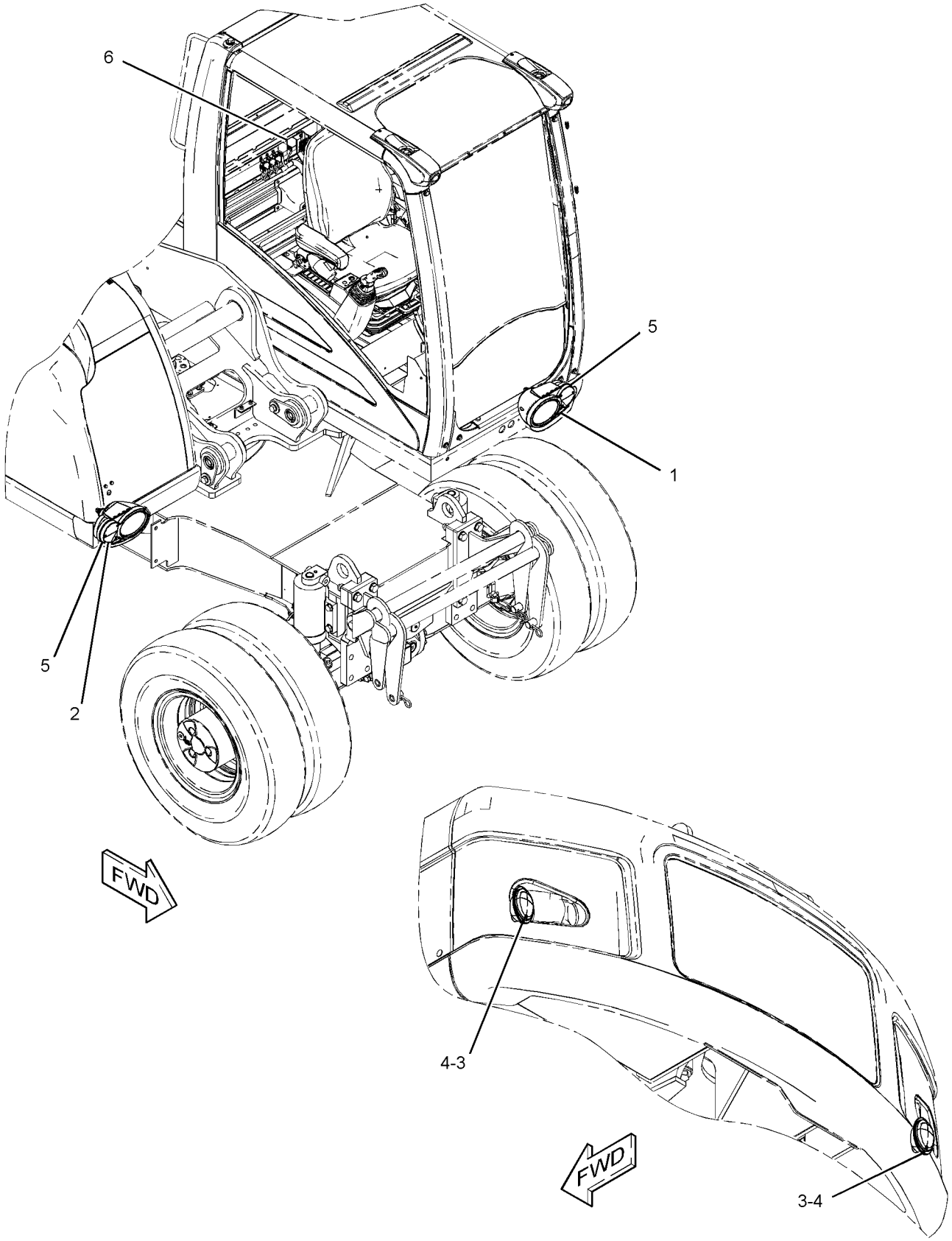

GRAPHIC #1 <END> g03197041

422-9765 LIGHTING GP-ROADING—STICK LAMP

S/N: CH91-UP
PART OF 453-3264 ROADING AR
AN ATTACHMENT

SMCS-1429 **i06149142**

NOTE	REF NO	GRAPHIC REF	PART NUMBER	QTY	PART NAME 1 2 3 4 5 6 (PRODUCT LEVEL)	SEE PAGE
	1	1	**3S-2093**	1	STRAP-CABLE	
	2	1	**5W-1119**	2	WASHER (9.8X18.5X1.5-MM THK)	
	3	1	**114-8907**	2	CLAMP	
	4	1	**126-3831**	1	PLATE AS	
	5	1	**128-8537**	2	LATCH-LOCK	
	6	1	**377-1876**	1	BRACKET	
	7	1	**444-6530**	1	LAMP GP-ROADING (24-VOLT, 5-WATT)	
		1	**9R-7942**	1	PLUG AS	
		1	**202-7201**	1	LAMP (24-VOLT, 5-WATT) (STICK)	
M	8	1	**129-3178**	2	LOCKNUT (M6X1-THD)	
M	9	1	**6V-7357**	2	BOLT (M6X1X25-MM)	
M	10	1	**101-7404**	2	BOLT-SOCKET HEAD (M10X1.5X30-MM)	
	11	1	**9X-8256**	4	WASHER (6.6X12X2-MM THK)	

M - METRIC PART

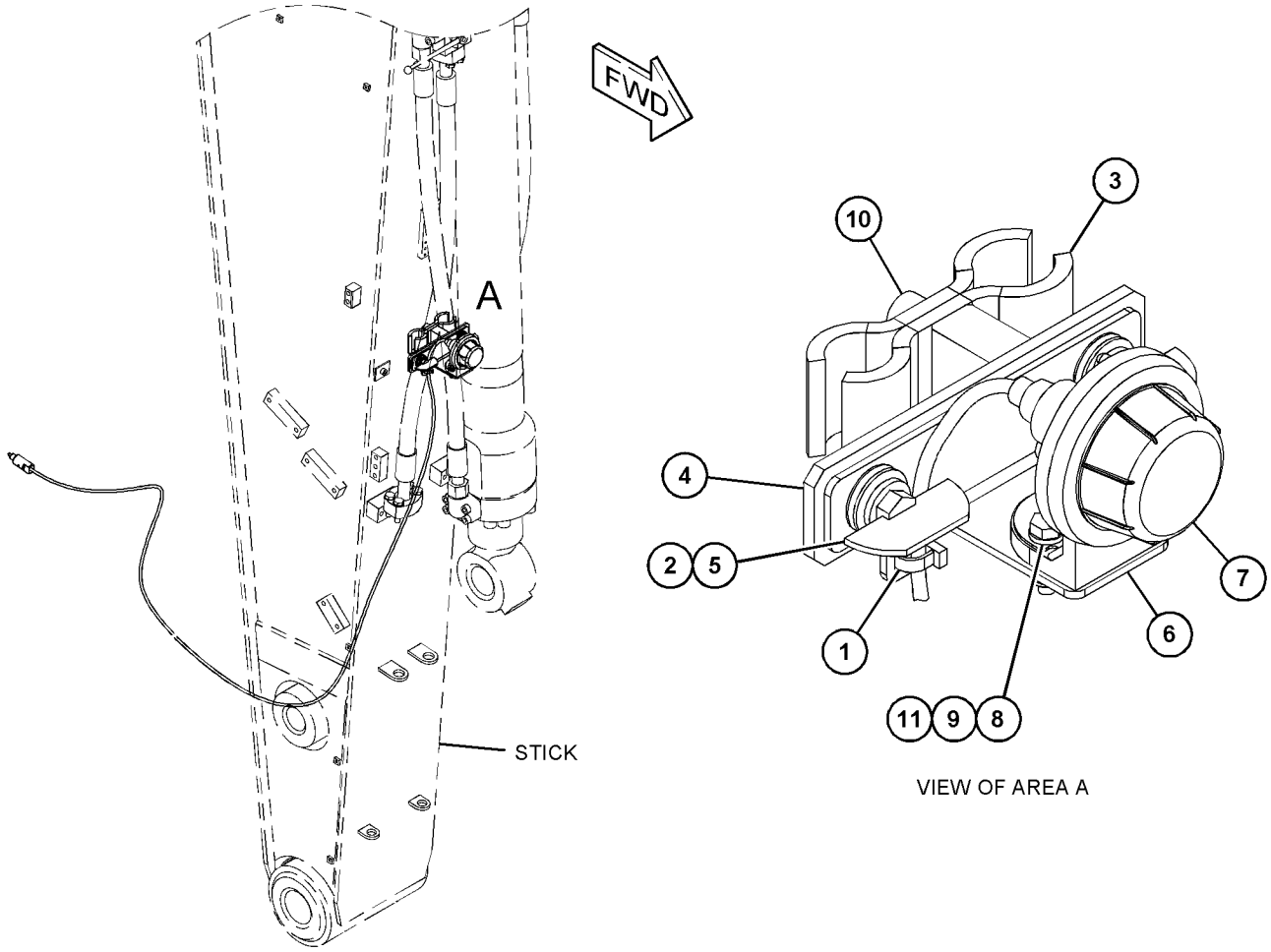

GRAPHIC #1 <END> g03696288

337-5782 MONITOR & MOUNTING GP

S/N: CH91-UP
PART OF 431-9097 ELECTRICAL AR
ALSO AN ATTACHMENT

SMCS-7490 **i05510210**

NOTE	REF NO	GRAPHIC REF	PART NUMBER	QTY	PART NAME 1 2 3 4 5 6 (PRODUCT LEVEL)	SEE PAGE
	1	1	**352-3318**	1	PLATE	
	2	1	**352-3319**	1	BRACKET AS	
	3	1	**354-6986**	1	SOFTWARE GP-MONITOR	
M	4	1	**9X-2044**	7	SCREW-TRUSS HEAD (M6X1X16-MM)	
M	5	1	**9X-2045**	3	SCREW-TRUSS HEAD (M6X1X20-MM)	

M - METRIC PART

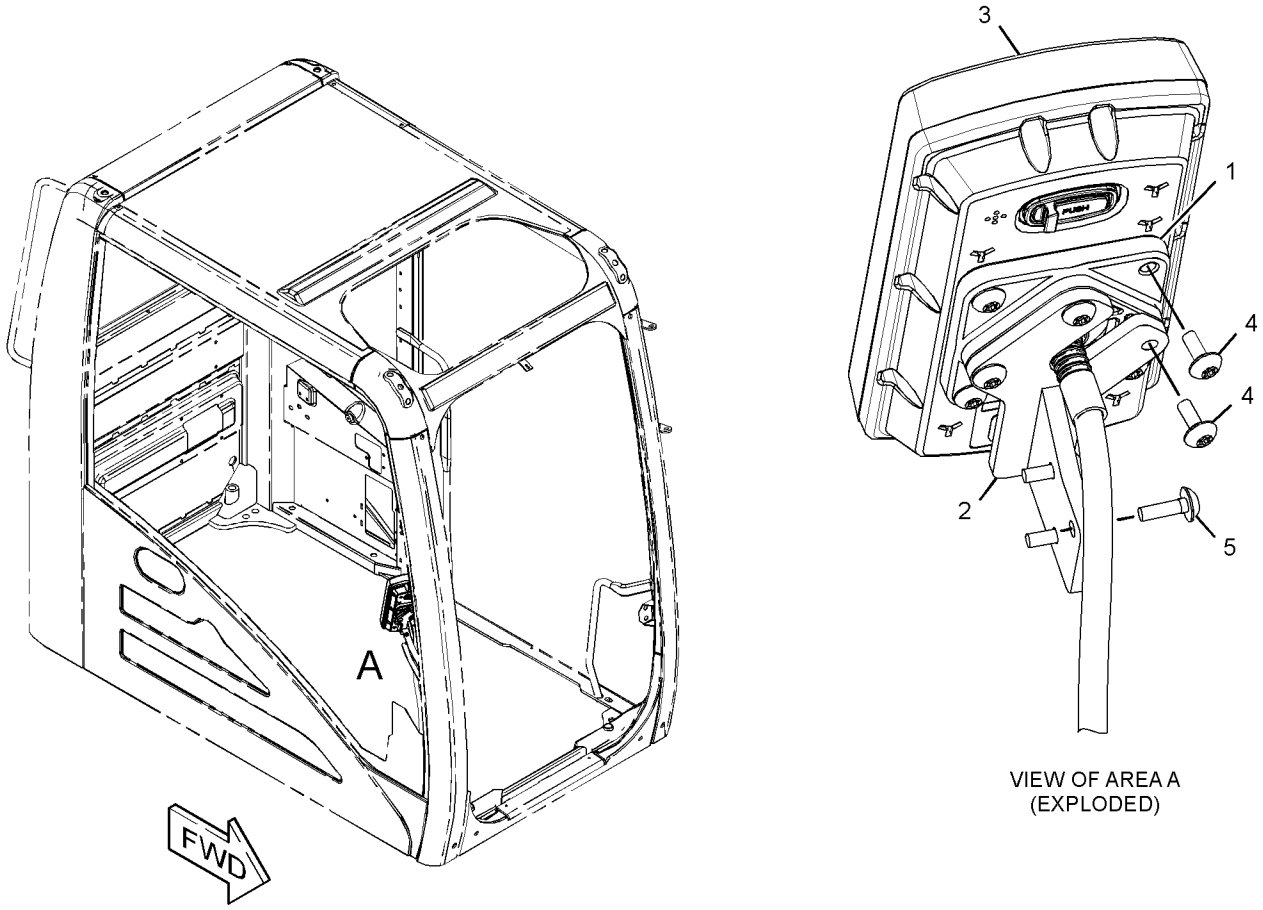

VIEW OF AREA A
(EXPLODED)

GRAPHIC #1 <END> g02358962

446-0274 MOUNTING GP-CONTROL

S/N: E7A1-UP
PART OF 446-6728 ENGINE AR-PRIMARY
ALSO AN ATTACHMENT

SMCS-1901 **i05938596**

NOTE	REF NO	GRAPHIC REF	PART NUMBER	QTY	PART NAME 1 2 3 4 5 6 (PRODUCT LEVEL)	SEE PAGE
M	1	1	**6I-4374**	2	BOLT (M8X1.25X60-MM)	
M	2	1	**220-8311**	2	BOLT (M8X1.25X115-MM)	
	3	1	**446-1270**	1	BRACKET AS	

M - METRIC PART

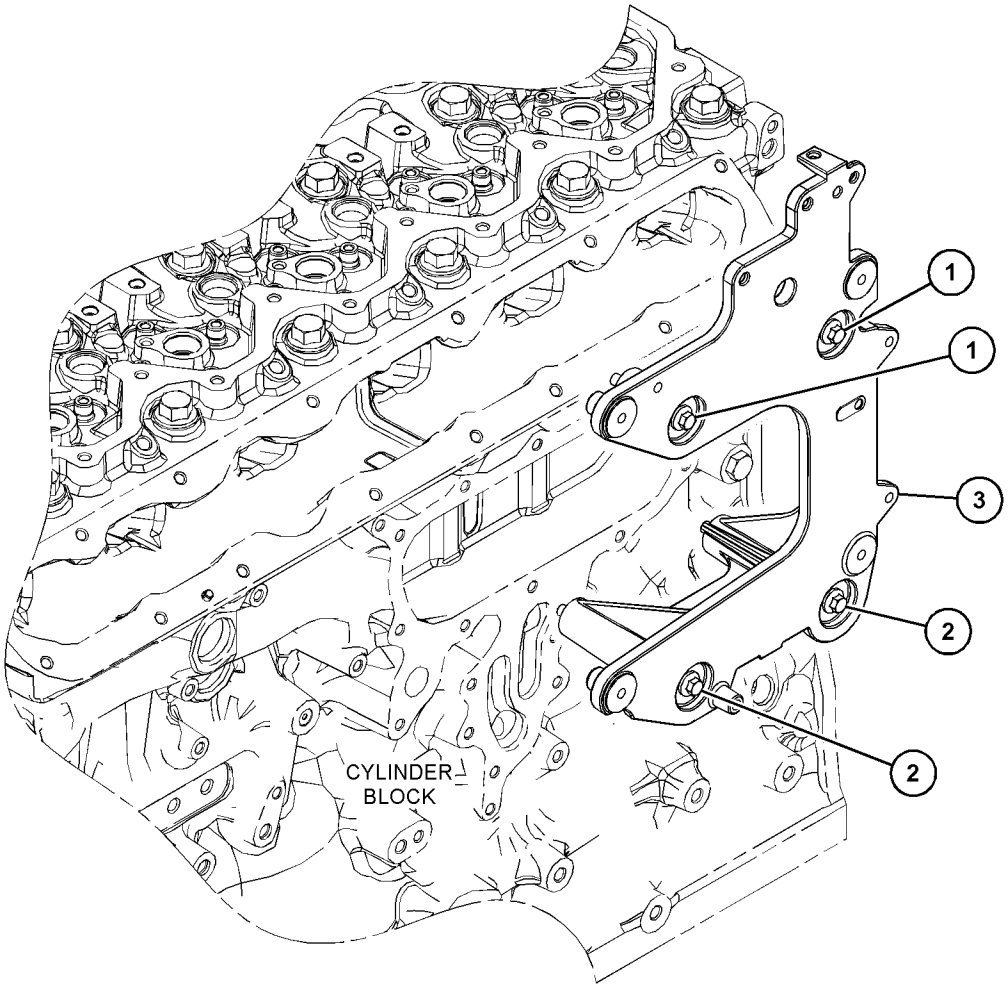

GRAPHIC #1 <END> g03731504

336-3545 RADIO GP-COMMUNICATION—PRODUCT LINK 121SR

S/N: CH91-UP

PART OF 377-1940 CONTROL GP-COMMUNICATION

AN ATTACHMENT

SMCS-733T **i07720735**

NOTE	PART NUMBER	QTY	PART NAME 1 2 3 4 5 6 (PRODUCT LEVEL)	SEE PAGE
	579-8995	1	SOFTWARE GP-COMMUNICATION (PRODUCT LINK 121SR)	

<END>

252-6615 REFLECTOR GP

S/N: CH91-UP
PART OF 396-4423 ELECTRICAL AR
ALSO AN ATTACHMENT

SMCS-1432 **i05496551**

NOTE	REF NO	GRAPHIC REF	PART NUMBER	QTY	PART NAME 1 2 3 4 5 6 (PRODUCT LEVEL)	SEE PAGE
	1	1	**252-6645**	4	REFLECTOR-YELLOW	
	2	1	**252-6646**	4	REFLECTOR-RED	

252-6615 **REFLECTOR GP** (contd.) **i05496551**

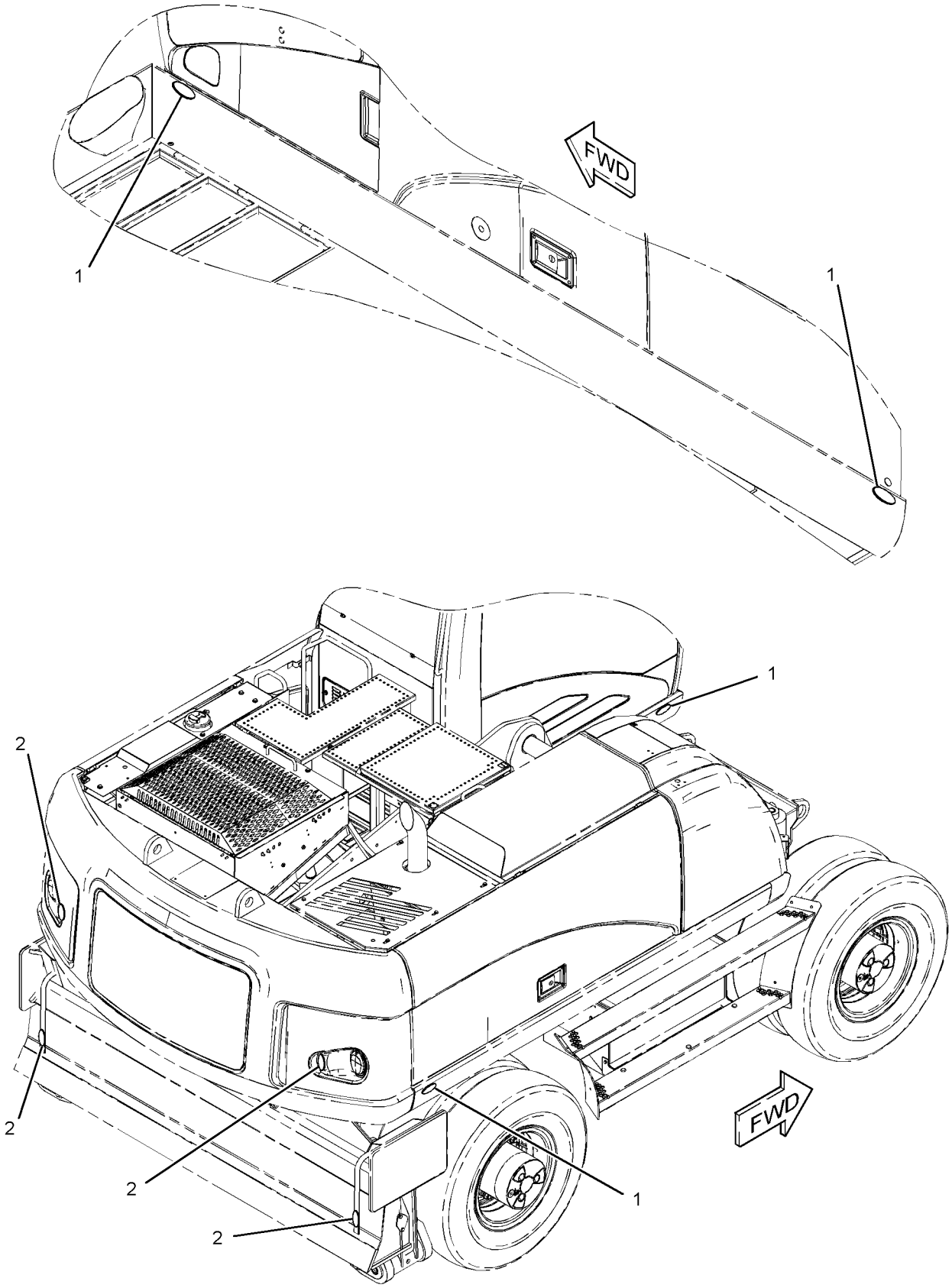

GRAPHIC #1 <END> g01325145

273-4840 SENSOR & MTG GP-LIQUID LEVEL—FUEL TANK

S/N: CH91-UP
PART OF 252-9829 TANK GP-FUEL
ALSO AN ATTACHMENT

SMCS-1408 **i06023400**

NOTE	REF NO	GRAPHIC REF	PART NUMBER	QTY	PART NAME 1 2 3 4 5 6 (PRODUCT LEVEL)	SEE PAGE
	1	1	**268-2550**	1	TUBE AS	
	2	1	**273-4838**	1	SEAL	
	3	1	**273-4839**	1	SENSOR GP-FUEL LEVEL	
		1	**102-8803**	1	KIT-RECEPTACLE (3-PIN)	
					(INCLUDES RECEPTACLE AS & WEDGE)	
		1	**8T-8729**	3	PIN-CONNECTOR (16-GA TO 20-GA)	
	4	1	**096-0192**	5	LOCKWASHER	
M	5	1	**8T-6699**	5	BOLT-SOCKET HEAD (M5X0.8X35-MM)	

M - METRIC PART

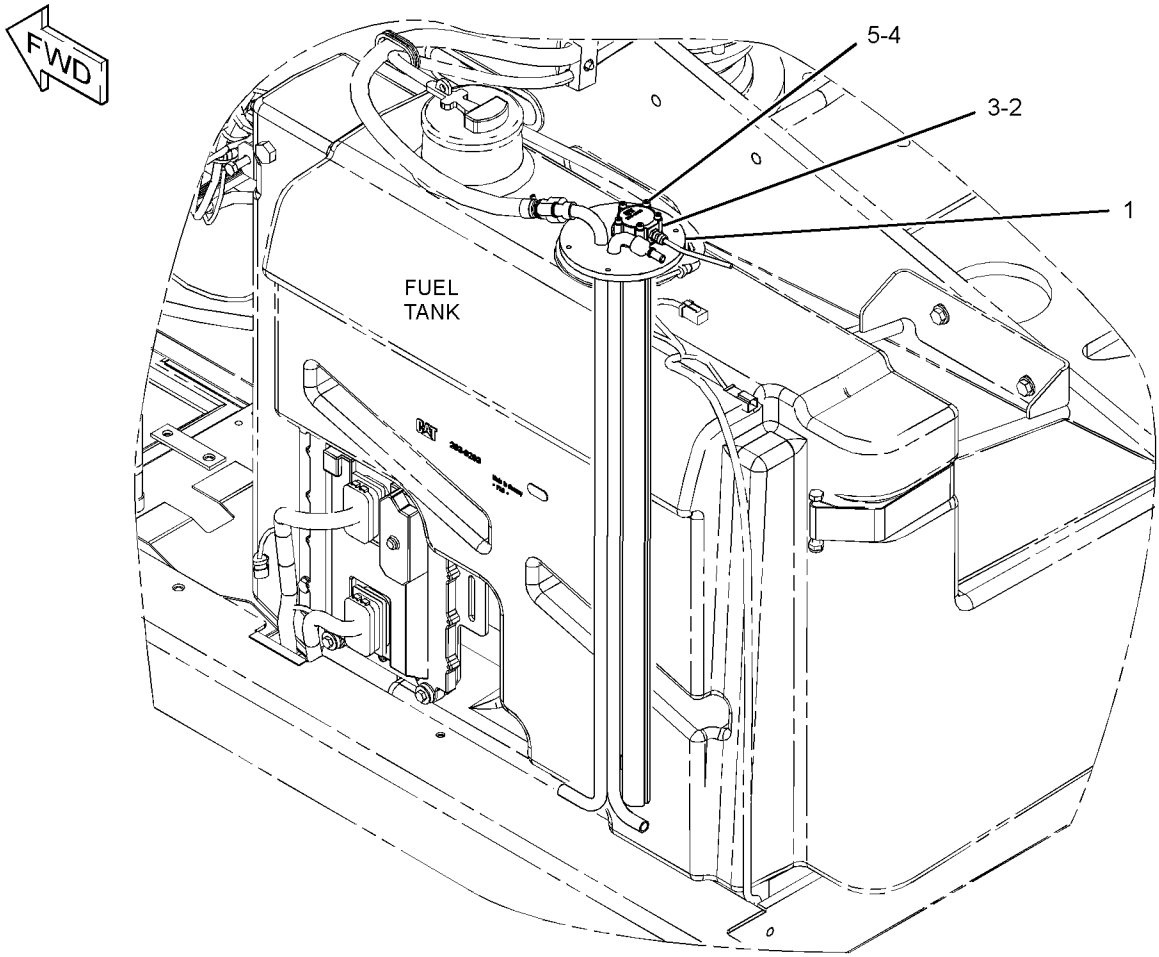

GRAPHIC #1 <END> g01402216

395-0110 SENSOR GP-ENGINE

S/N: E7A1-UP

PART OF 446-6728 ENGINE AR-PRIMARY

SMCS-1000, 1906, 1907, 1924, 7422 **i06792691**

NOTE	REF NO	GRAPHIC REF	PART NUMBER	QTY	PART NAME 1 2 3 4 5 6 (PRODUCT LEVEL)	SEE PAGE
M	1	1	**124-3815**	2	BOLT (M8X1.25X16-MM)	
	2	1	**199-9252**	1	SEAL-O-RING	
	3	1	**199-9267**	1	SEAL-O-RING	
	4	1	**199-9751**	1	SEAL-O-RING	
	5	1	**238-0120**	2	SENSOR GP-SPEED (ENGINE)	
	6	1	**256-6454**	1	SENSOR-TEMPERATURE (2-PIN) (AIR INLET MANIFOLD)	
	6A	1	**256-6454**	1	SENSOR-TEMPERATURE (2-PIN) (COOLANT)	
	7	1	**276-5603**	1	SEAL-O-RING	
	8	1	**320-3060**	1	SENSOR GP-PRESSURE (ENGINE OIL)	
	9	1	**320-3062**	1	SENSOR GP-PRESSURE (INLET MANIFOLD AIR)	
	10	1	**228-4947**	2	SEAL-O-RING	

M - METRIC PART

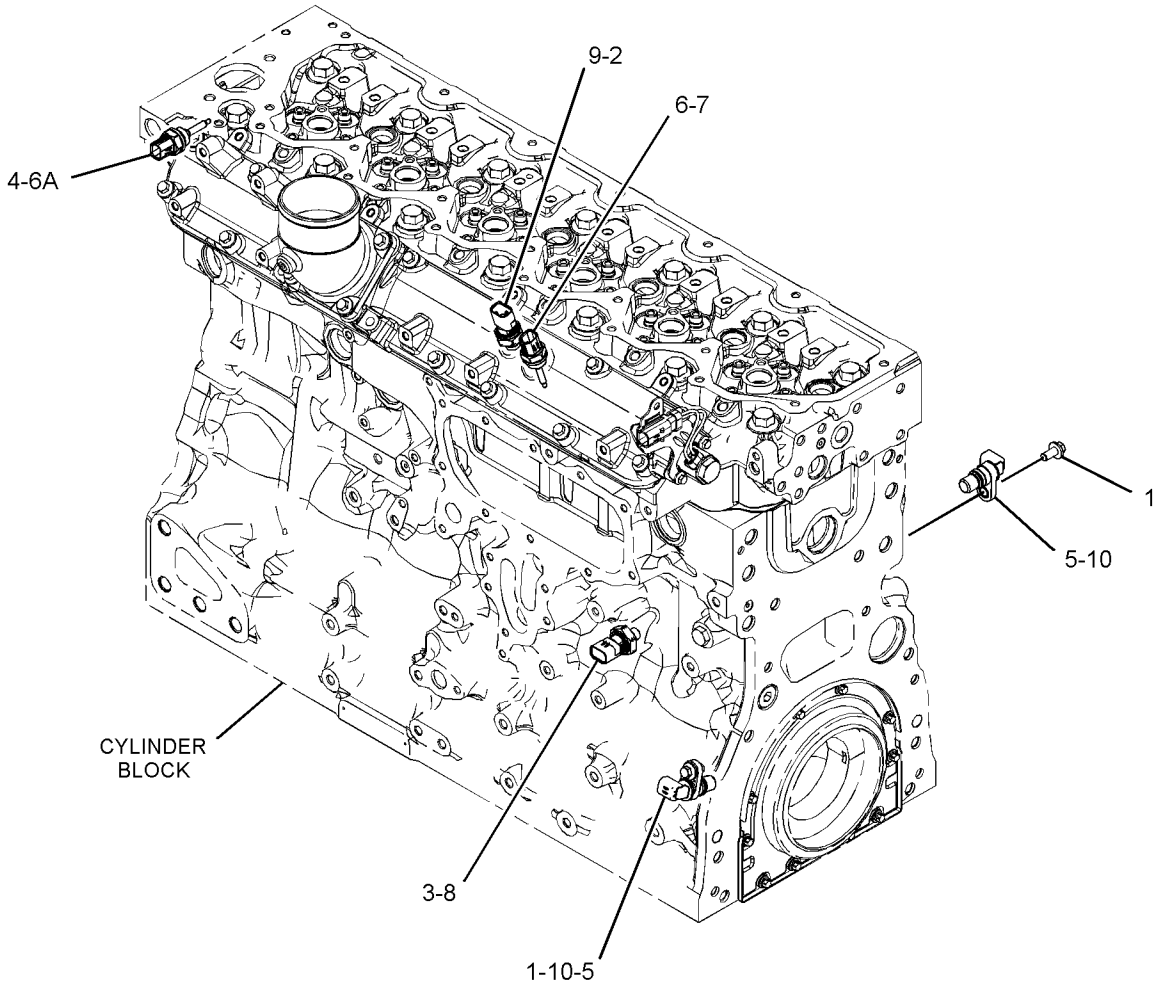

GRAPHIC #1 <END> g03380662

395-0110 SENSOR GP-ENGINE

S/N: E7A1-UP
PART OF 446-6728 ENGINE AR-PRIMARY
ALSO AN ATTACHMENT

SMCS-1000, 1906, 1907, 1924, 7422 **i06792975**

NOTE	REF NO	GRAPHIC REF	PART NUMBER	QTY	PART NAME 1 2 3 4 5 6 (PRODUCT LEVEL)	SEE PAGE
M	1	1	**124-3815**	2	BOLT (M8X1.25X16-MM)	
	2	1	**199-9252**	1	SEAL-O-RING	
	3	1	**199-9267**	1	SEAL-O-RING	
	4	1	**199-9751**	1	SEAL-O-RING	
C	5	1	**384-3888**	2	SENSOR GP-SPEED (ENGINE)	
	6	1	**256-6454**	1	SENSOR-TEMPERATURE (2-PIN) (AIR INLET MANIFOLD)	
	6A	1	**256-6454**	1	SENSOR-TEMPERATURE (2-PIN) (COOLANT)	
	7	1	**276-5603**	1	SEAL-O-RING	
	8	1	**320-3060**	1	SENSOR GP-PRESSURE (ENGINE OIL)	
	9	1	**320-3062**	1	SENSOR GP-PRESSURE (INLET MANIFOLD AIR)	
	10	1	**228-4947**	2	SEAL-O-RING	

C - CHANGE FROM PREVIOUS TYPE
M - METRIC PART

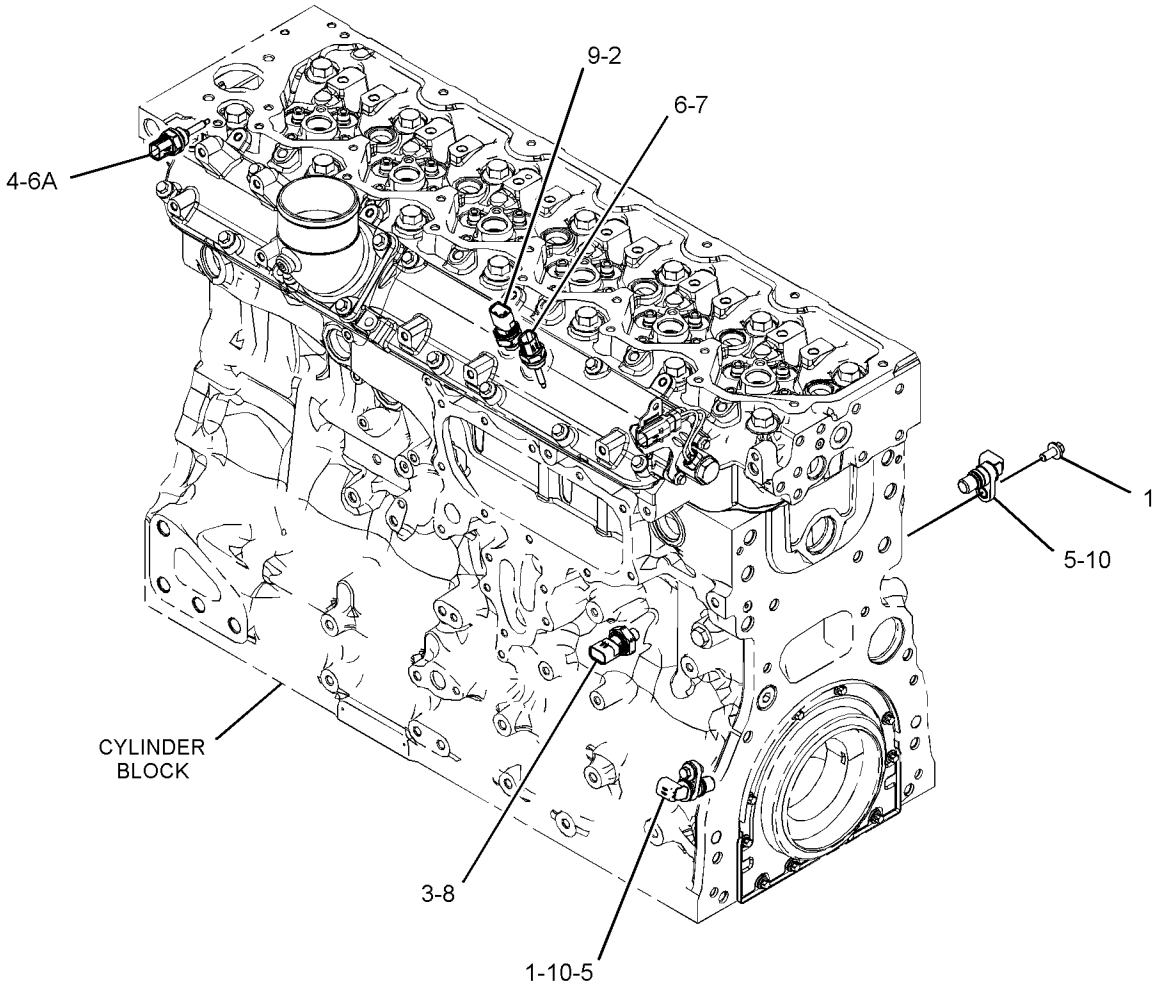

GRAPHIC #1 <END> g03380662

395-0114 STARTING AID GP

S/N: E7A1-UP
PART OF 446-6728 ENGINE AR-PRIMARY
ALSO AN ATTACHMENT

SMCS-1090 **i07383440**

NOTE	REF NO	GRAPHIC REF	PART NUMBER	QTY	PART NAME 1 2 3 4 5 6 (PRODUCT LEVEL)	SEE PAGE
M	1	1	**112-7704**	1	BOLT (M6X1X30-MM)	
M	2	1	**5C-2890**	2	NUT (M6X1-THD)	
	3	1	**217-9039**	1	STRAP-CABLE	
	4	1	**462-2235**	6	GLOW PLUG (24-VOLT)	
	5	1	**368-3145**	1	BUS BAR AS	
	6	1	**384-7567**	1	HARNESS AS-STARTING AID	
E		1	**292-2893**		CONDUIT (10.1-MM ID) (4-CM)	
		1	**2L-8050**	2	TERMINAL-RING (6-GA, 1/4-IN SCREW)	
					—OR—	
		1	**2L-8058**	2	TERMINAL-RING (8-GA, 1/4-IN SCREW)	
		1	**427-9771**	1	TIE	
M	7	1	**208-8469**	1	LOCKNUT (M6X1-THD)	
	8	1	**275-2428**	1	INSULATOR	
	9	1	**277-4409**	1	CAP	
	10	1	**067-6070**	1	WASHER	
	11	1	**275-2431**	1	WASHER	

E - ORDER BY THE CENTIMETER
M - METRIC PART

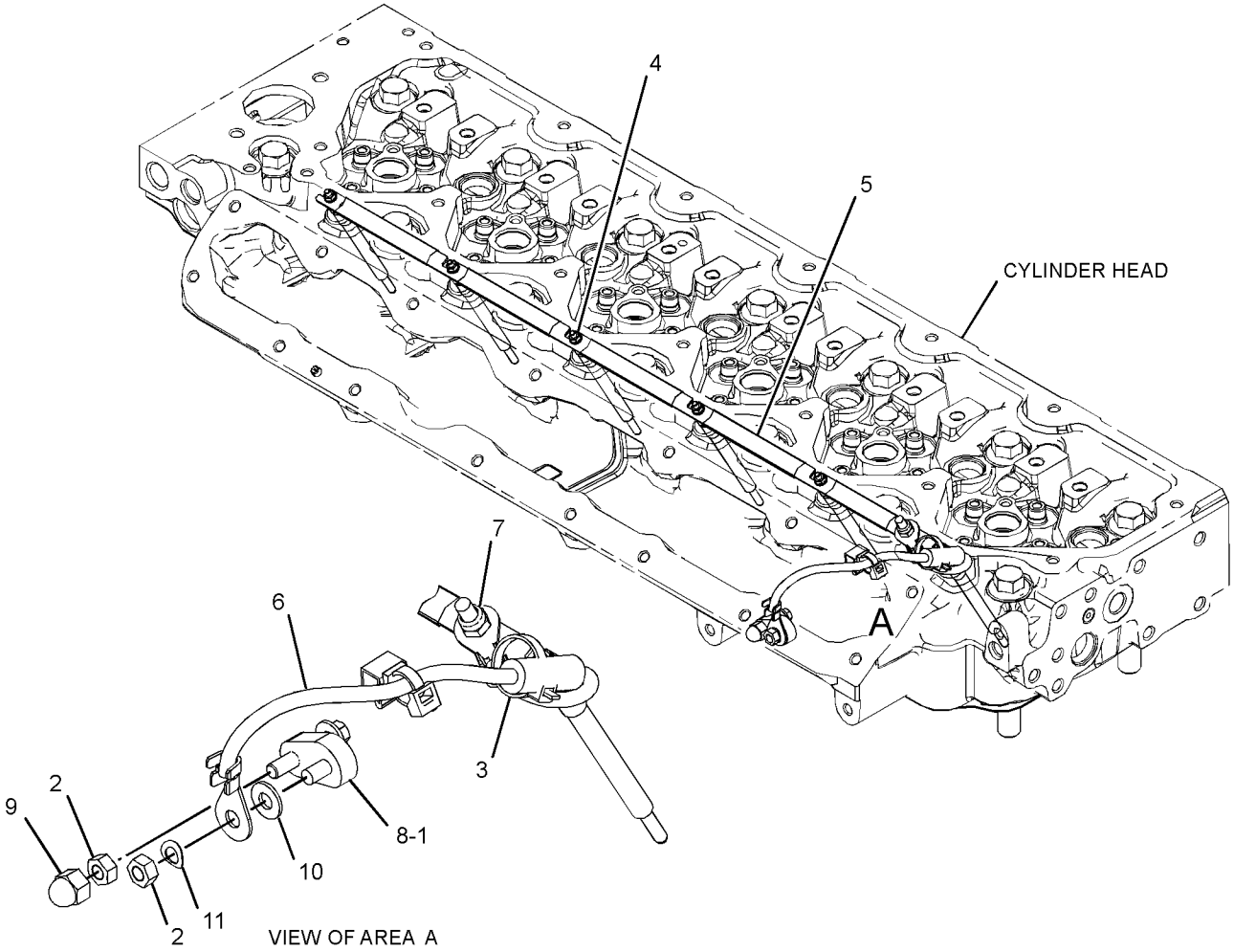

GRAPHIC #1 <END> g06032380

7N-0718 SWITCH GP-DISCONNECT–BATTERY

S/N: CH91-UP
PART OF 377-1843 BATTERY & WIRING GP
ALSO AN ATTACHMENT

SMCS-1411 **i02636136**

NOTE	REF NO	GRAPHIC REF	PART NUMBER	QTY	PART NAME 1 2 3 4 5 6 (PRODUCT LEVEL)	SEE PAGE
	1	1	**2H-3922**	2	LOCKWASHER	
	2	1	**8H-5303**	1	NUT (3/4-16-THD)	
	3	1	**9F-5644**	2	LOCKWASHER	
	4	1	**6F-7045**	2	NUT-FULL (3/8-24-THD)	
	5	1	**8H-5306**	1	KEY (BATTERY DISCONNECT)	

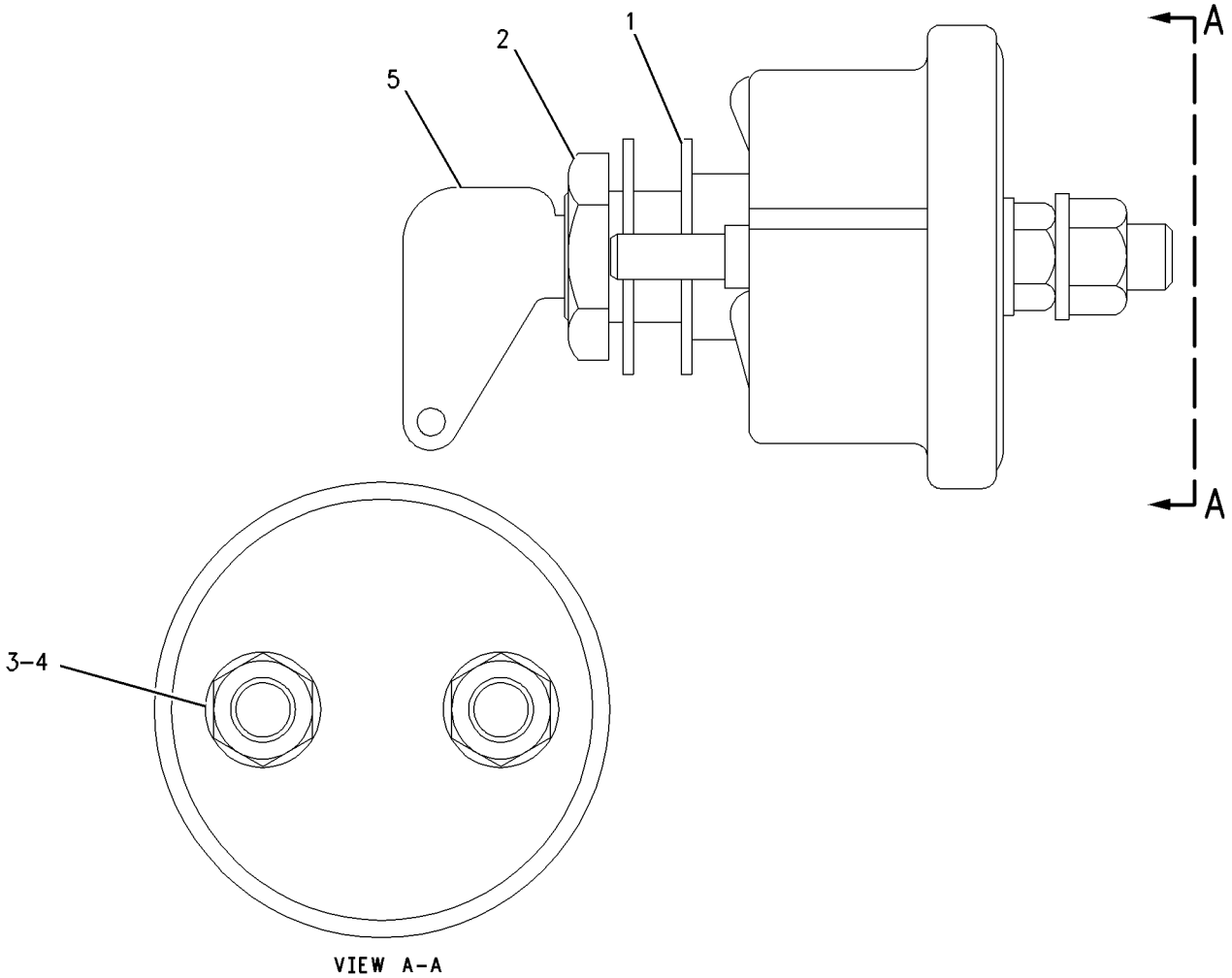

GRAPHIC #1 <END> g00664195

118-3534 SWITCH GP-MAGNETIC

S/N: CH91-UP
24-VOLT
PART OF 377-1843 BATTERY & WIRING GP
ALSO AN ATTACHMENT

SMCS-7499 **i06705127**

NOTE	PART NUMBER	QTY	PART NAME 1 2 3 4 5 6 (PRODUCT LEVEL)	SEE PAGE
Y	**175-2308**	1	SWITCH GP-MAGNETIC (24-VOLT) (START RELAY)	187
			—OR—	
Y	*175-2309*	1	SWITCH GP-MAGNETIC (24-VOLT) (START RELAY)	188

Y - SEPARATE ILLUSTRATION

<END>

175-2308 SWITCH GP-MAGNETIC

S/N: CH91-UP
24-VOLT
PART OF 118-3534 SWITCH GP-MAGNETIC
ALSO AN ATTACHMENT

SMCS-7499 **i06023405**

NOTE	REF NO	GRAPHIC REF	PART NUMBER	QTY	PART NAME 1 2 3 4 5 6 (PRODUCT LEVEL)	SEE PAGE
	1	1	**102-8802**	1	KIT-RECEPTACLE (2-PIN)	
					(INCLUDES RECEPTACLE AS & WEDGE)	
	2	1	**8T-8729**	2	PIN-CONNECTOR (16-GA TO 20-GA)	
	3	1	**1H-3338**	2	LOCKWASHER	
	4	1	**012-0380**	2	LOCKWASHER (6.5X12.5X1.6-MM THK)	
M	5	1	**5C-2890**	2	NUT (M6X1-THD)	
E	6	1	**9X-1813**		SLEEVE (16-CM)	

E - ORDER BY THE CENTIMETER
M - METRIC PART

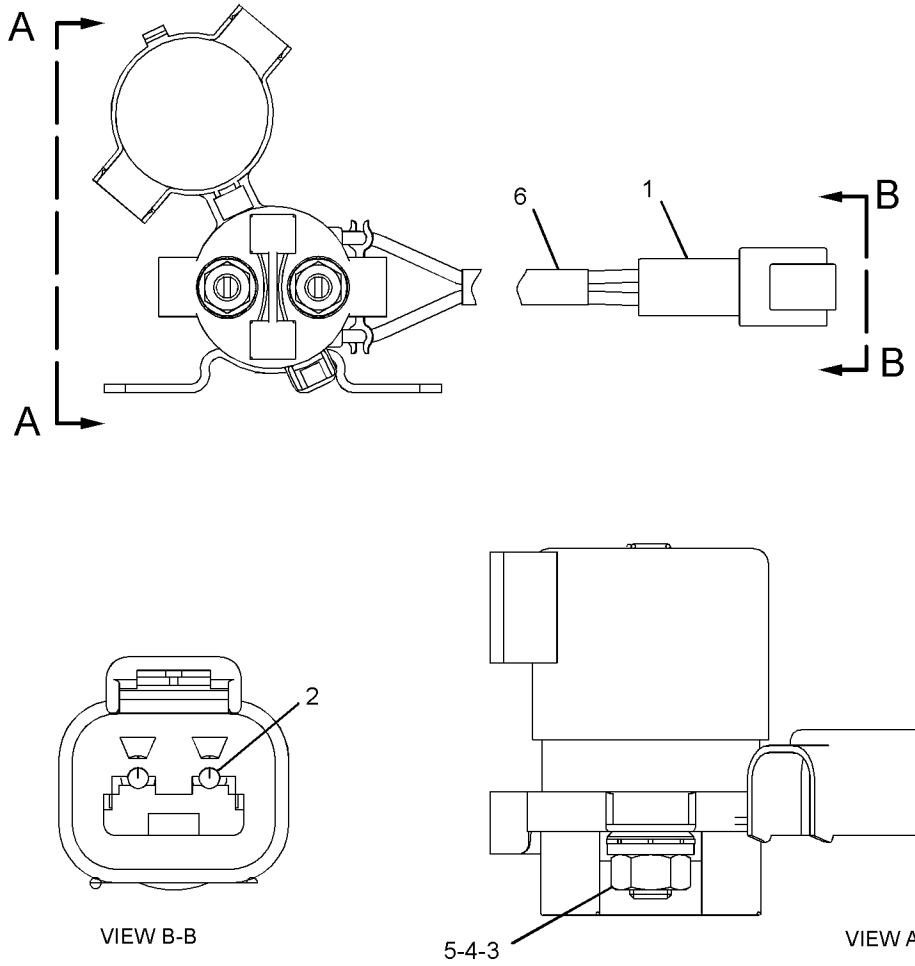

GRAPHIC #1 <END> g01266266

175-2309 SWITCH GP-MAGNETIC

S/N: CH91-UP
24-VOLT
PART OF 118-3534 SWITCH GP-MAGNETIC
ALSO AN ATTACHMENT

SMCS-7499 **i06023404**

NOTE	REF NO	GRAPHIC REF	PART NUMBER	QTY	PART NAME 1 2 3 4 5 6 (PRODUCT LEVEL)	SEE PAGE
	1	1	**117-9081**	1	SWITCH AS-MAGNETIC (24-VOLT) (STARTER RELAY)	
	1A	1	**1H-3338**	2	LOCKWASHER	
M	1B	1	**5C-2890**	2	NUT (M6X1-THD)	
	1C	1	**012-0380**	2	LOCKWASHER (6.5X12.5X1.6-MM THK)	
	2	1	**102-8802**	1	KIT-RECEPTACLE (2-PIN)	
					(INCLUDES RECEPTACLE AS & WEDGE)	
	3	1	**8T-8729**	2	PIN-CONNECTOR (16-GA TO 20-GA)	
E	4	1	**9X-1813**		SLEEVE (16-CM)	

E - ORDER BY THE CENTIMETER
M - METRIC PART

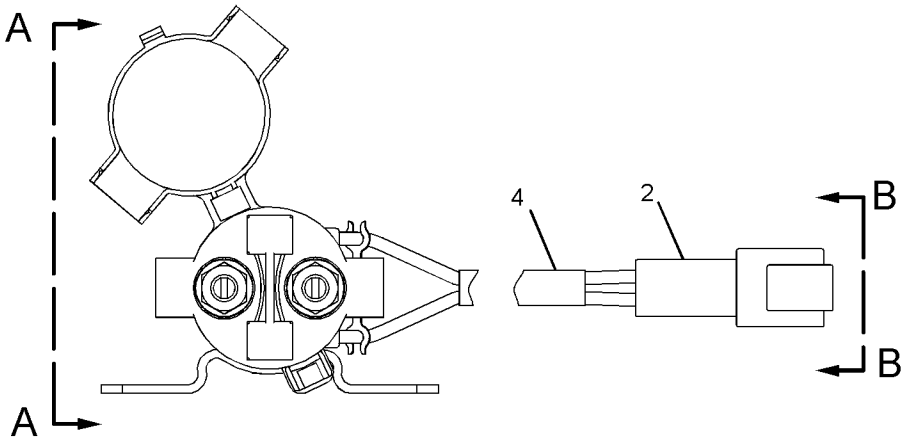

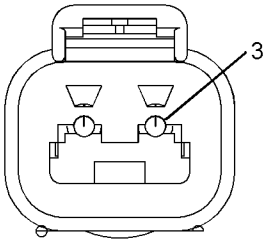

VIEW B-B

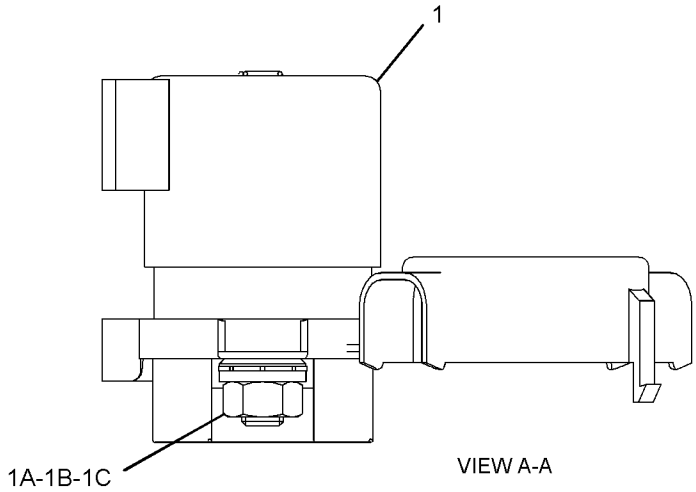

VIEW A-A

GRAPHIC #1 <END> g01266277

241-8368 SWITCH GP-MAGNETIC—GLOW PLUG RELAY

S/N: CH91-UP
24-VOLT
PART OF 377-1843 BATTERY & WIRING GP, 374-0829, 475-4069 PUMP GP-FUEL TRANSFER, 337-5780 WIRING GP-CAB
ALSO AN ATTACHMENT

SMCS-7499 **i06752838**

NOTE	REF NO	GRAPHIC REF	PART NUMBER	QTY	PART NAME 1 2 3 4 5 6 (PRODUCT LEVEL)	SEE PAGE
	1	1	**155-2270**	1	KIT-CONNECTING PLUG (2-PIN)	
					(INCLUDES PLUG AS, WEDGE & INTERFACE SEAL)	
	2	1	**4F-2294**	2	NUT-JAM (5/16-24-THD)	
	3	1	**8T-8730**	2	SOCKET-CONNECTOR (16-GA TO 18-GA)	

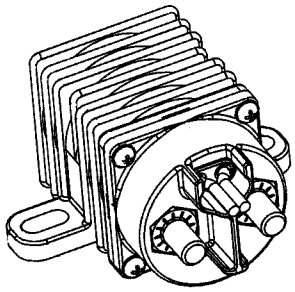

ISOMETRIC VIEW

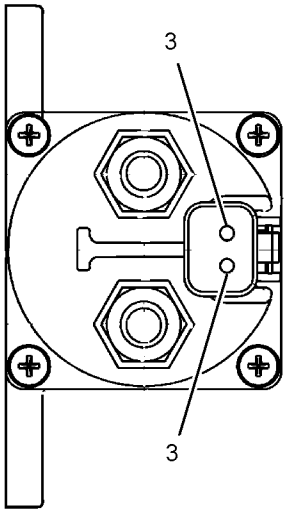

VIEW A-A

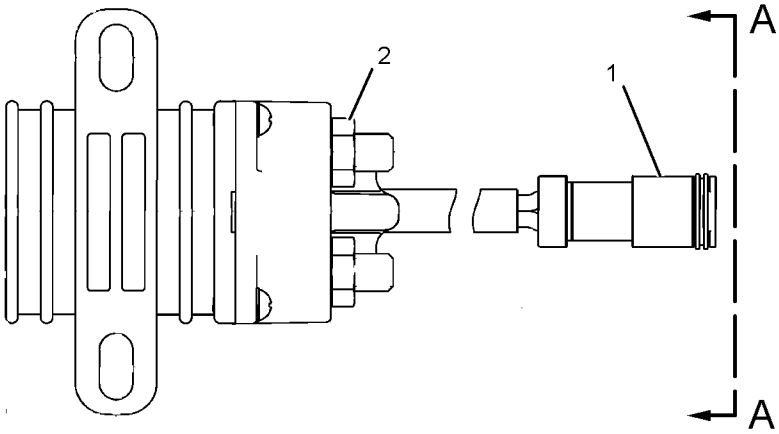

GRAPHIC #1 <END> g01077362

337-5830 SWITCH GP-SHUTDOWN

S/N: CH91-UP
PART OF 396-4423 ELECTRICAL AR
ALSO AN ATTACHMENT

SMCS-1408, 1435 **i05496557**

NOTE	REF NO	GRAPHIC REF	PART NUMBER	QTY	PART NAME 1 2 3 4 5 6 (PRODUCT LEVEL)	SEE PAGE
	1	1	**3E-5169**	2	GUARD-SWITCH	
	2	1	**297-8752**	1	SWITCH GP-TOGGLE (ENGINE SHUTOFF)	
		1	**8T-8729**	3	PIN-CONNECTOR (16-GA TO 20-GA)	
		1	**230-4014**	1	RECEPTACLE AS-CONNECTOR (3-PIN)	
	3	1	**337-5829**	1	PLATE	
M	4	1	**5C-9553**	2	BOLT (M6X1X16-MM)	
	5	1	**9X-8256**	2	WASHER (6.6X12X2-MM THK)	

M - METRIC PART

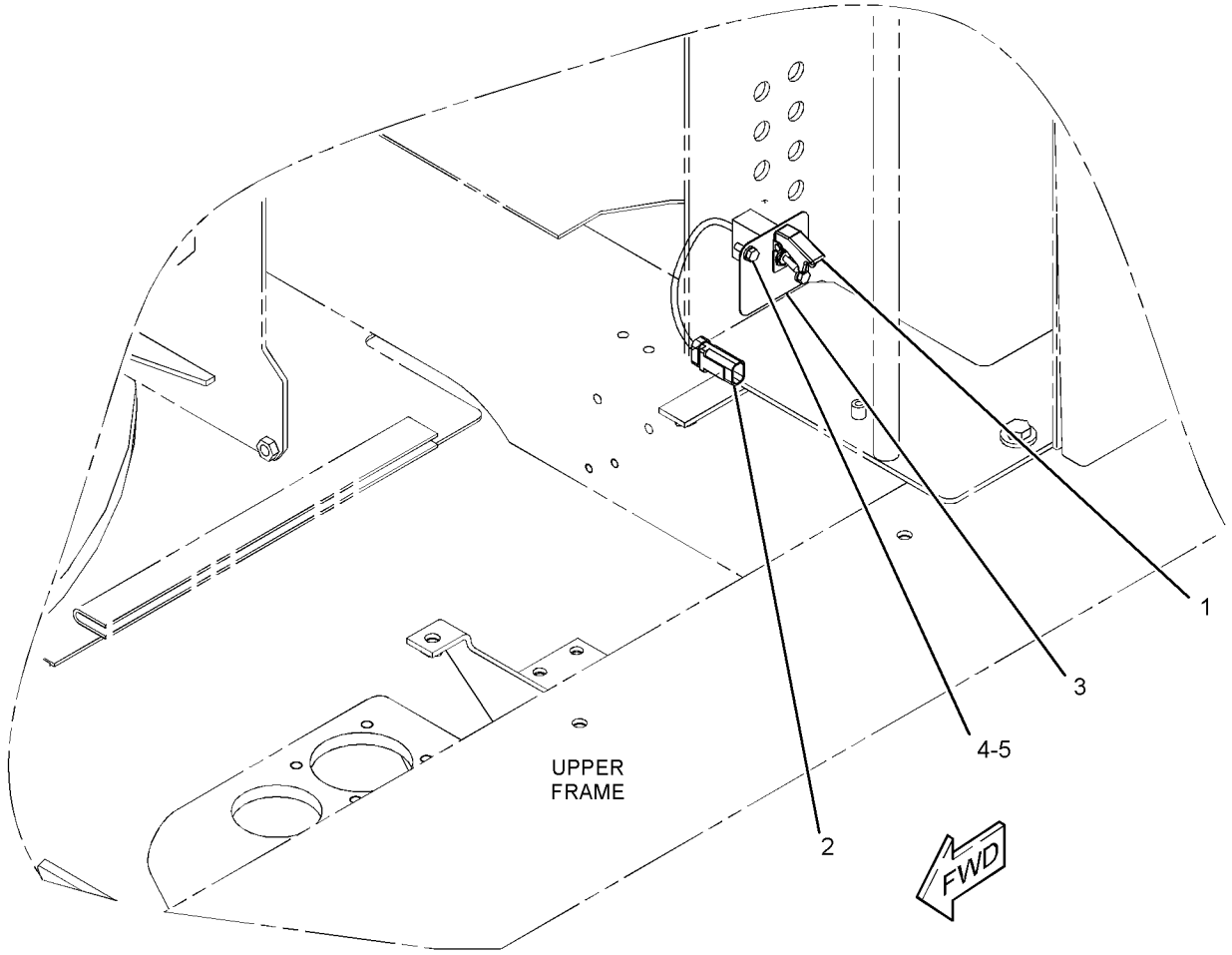

GRAPHIC #1 <END> g02417656

375-0595 SWIVEL GP-ELECTRIC

S/N: CH91-UP

PART OF 377-1899 WIRING GP-STABILIZER

AN ATTACHMENT

SMCS-1408, 7553 **i05867045**

NOTE	REF NO	GRAPHIC REF	PART NUMBER	QTY	PART NAME 1 2 3 4 5 6 (PRODUCT LEVEL)	SEE PAGE
	1	1	**437-0420**	1	COVER	
	2	1	**8C-9660**	4	WASHER (4.6X7.9X0.8-MM THK)	
M	3	1	**8T-4754**	4	SCREW (M4X0.7X60-MM)	
	4	1	**151-9274**	1	KIT-RECEPTACLE (4-PIN)	
					(INCLUDES RECEPTACLE AS & WEDGE)	
	5	1	**171-0596**	1	RECEPTACLE AS-CONNECTOR (3-PIN)	
	6	1	**3E-3371**	1	WEDGE-RECEPTACLE LOCK (3-PIN)	
	7	1	**9X-3401**	7	PIN-CONNECTOR (16-GA TO 18-GA)	
	8	1	**9X-3402**	7	SOCKET-CONNECTOR (16-GA TO 18-GA)	

M - METRIC PART

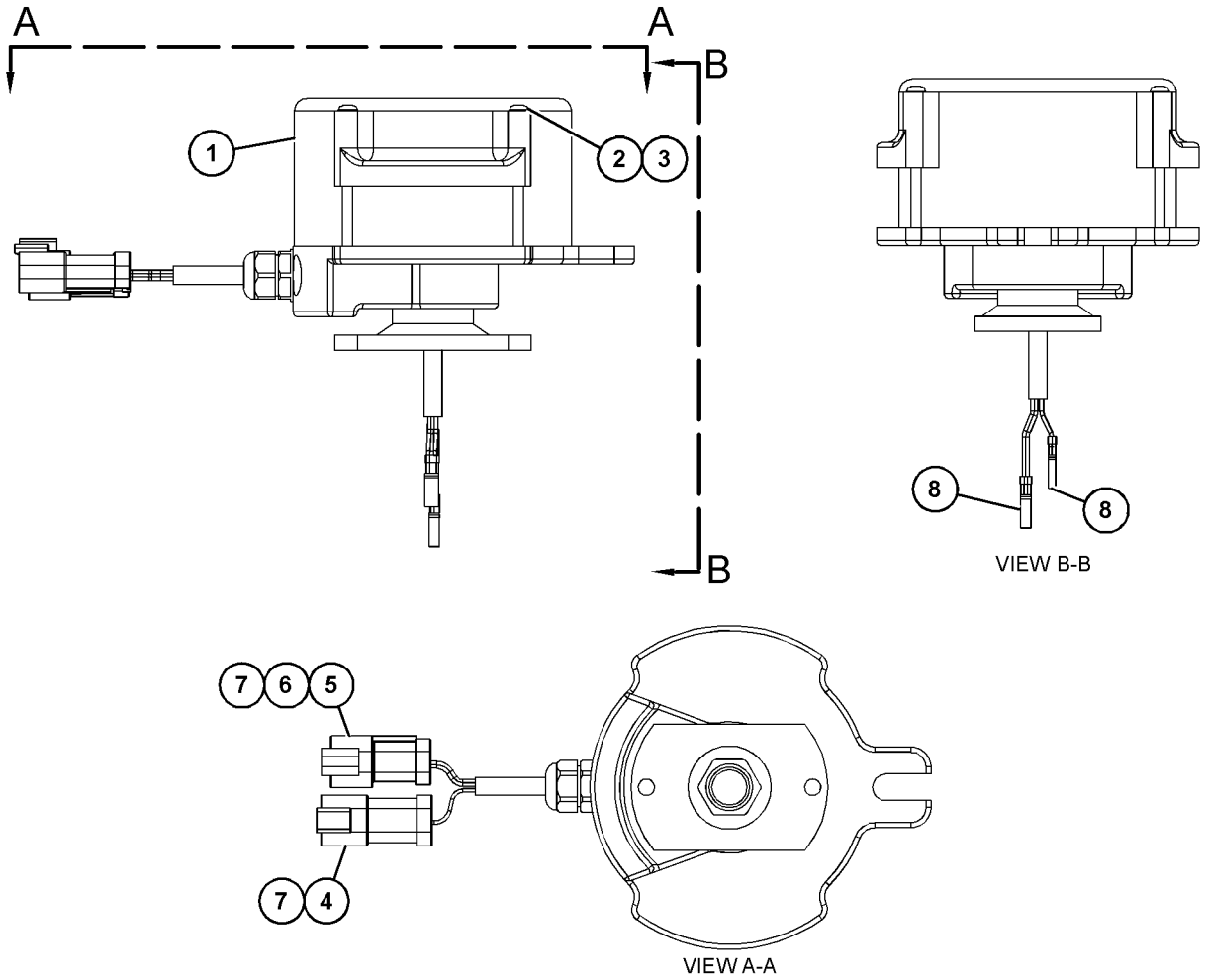

GRAPHIC #1 <END> g03502387

337-5780 WIRING GP-CAB—FUSE, RELAY

S/N: CH91-UP
PART OF 431-9097 ELECTRICAL AR
ALSO AN ATTACHMENT

SMCS-1408, 7301 **i05558157**

NOTE	REF NO	GRAPHIC REF	PART NUMBER	QTY	PART NAME 1 2 3 4 5 6 (PRODUCT LEVEL)	SEE PAGE
	1	2	**113-8490**	8	FUSE (10-AMPERE)	
	2	2	**113-8491**	12	FUSE (15-AMPERE)	
	3	2	**113-8492**	2	FUSE (20-AMPERE)	
	4	2	**113-8493**	2	FUSE (25-AMPERE)	
	5	2	**141-2759**	16	FUSE (5-AMPERE)	
	6	1	**149-5050**	1	RELAY (24-VOLT) (POSITION LAMP, LH)	
	6A	1	**149-5050**	1	RELAY (24-VOLT) (LOW BEAM, LH)	
	6B	1	**149-5050**	1	RELAY (24-VOLT) (HIGH BEAM, LH)	
	7	1	**161-3128**	1	RELAY (24-VOLT) (POSITION LAMP, RH)	
	7A	1	**161-3128**	1	RELAY (24-VOLT) (LOW BEAM, RH)	
	7B	1	**161-3128**	1	RELAY (24-VOLT) (HIGH BEAM, RH)	
	7C	2	**161-3128**	1	RELAY (24-VOLT) (BOOM LIGHTS)	
	7D	2	**161-3128**	1	RELAY (24-VOLT) (FRONT CAB FLOODLIGHTS)	
	7E	2	**161-3128**	1	RELAY (24-VOLT) (HORN)	
	7F	2	**161-3128**	1	RELAY (24-VOLT) (IMPLEMENT LOCKOUT)	
	7G	2	**161-3128**	1	RELAY (24-VOLT) (BRAKE LIGHT)	
	7H	2	**161-3128**	1	RELAY (24-VOLT) (WIPER CUT-OUT)	
	7J	2	**161-3128**	1	RELAY (24-VOLT) (BEACON)	
	8	2	**170-6888**	1	PULLER-FUSE	
Y	9	1	**241-8368**	1	SWITCH GP-MAGNETIC (24-VOLT) (MAIN POWER RELAY)	189
	10	1	**273-8350**	1	WIRE AS	
	11	1	**273-8351**	1	WIRE AS	
Y	13	1	**375-0597**	1	HARNESS AS-CAB (FUSE, RELAY)	128
	14	1	**346-5495**	1	RELAY AS (24-VOLT) (WIPER)	
M	15	2	**095-0742**	4	SCREW-MACHINE (M6X1X16-MM)	
	16	1	**132-5789**	1	CLIP (LADDER)	
B	17	1	**3S-2093**	2	STRAP-CABLE	
M	18	1	**5C-2890**	2	NUT (M6X1-THD)	
	19	1	**7K-1181**	3	STRAP-CABLE	
	20	1	**8T-0087**	1	LOCKWASHER	
M	21	1	**8T-0286**	5	BOLT (M5X0.8X8-MM)	
	22	1	**8T-0328**	5	WASHER-HARD (5.5X10X1-MM THK)	
M	23	1	**8T-4138**	2	BOLT (M6X1X20-MM)	
M	24	1	**8T-4970**	1	BOLT (M6X1X14-MM)	
M	25	1	**9X-2042**	1	SCREW-TRUSS HEAD (M6X1X12-MM)	
	26	1,2	**9X-8256**	8	WASHER (6.6X12X2-MM THK)	

B - USE AS REQUIRED
M - METRIC PART
Y - SEPARATE ILLUSTRATION

337-5780 **WIRING GP-CAB** (contd.) **i05558157**

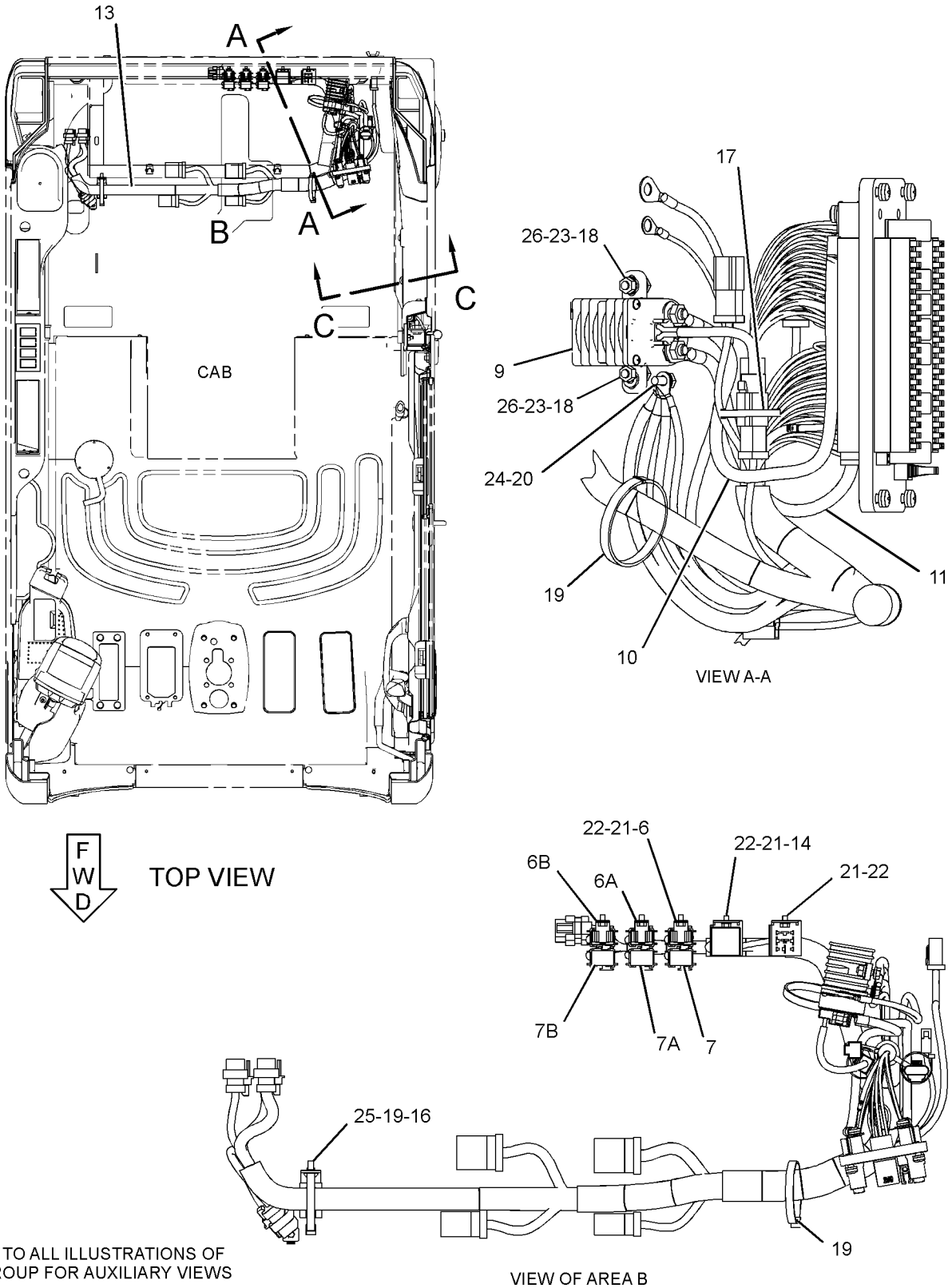

REFER TO ALL ILLUSTRATIONS OF THIS GROUP FOR AUXILIARY VIEWS

GRAPHIC #1

g03203716

337-5780 **WIRING GP-CAB (**contd.**)** **i05558157**

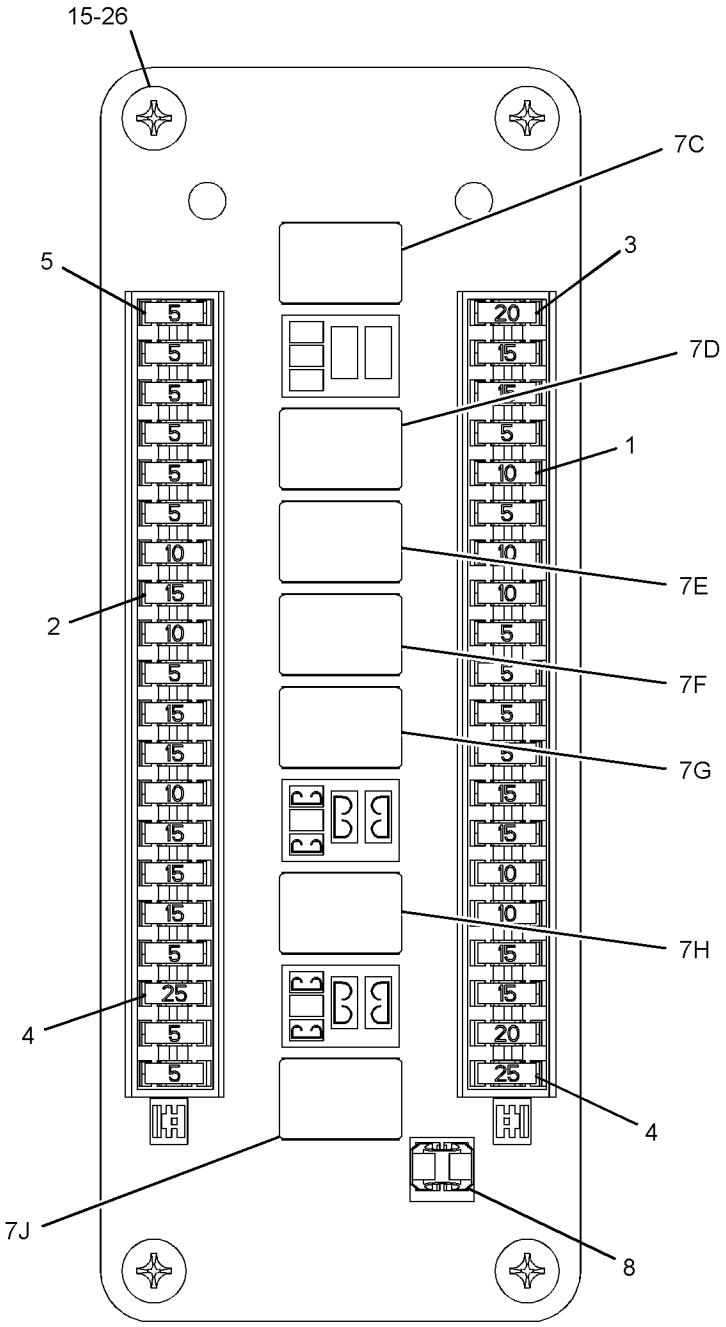

VIEW C-C

GRAPHIC #2 <END> g02427918

431-9098 WIRING GP-CAB

S/N: CH91-UP
PART OF 431-9097 ELECTRICAL AR
ALSO AN ATTACHMENT

SMCS-1408, 7301 **i07310713**

NOTE	REF NO	GRAPHIC REF	PART NUMBER	QTY	PART NAME 1 2 3 4 5 6 (PRODUCT LEVEL)	SEE PAGE
	1	1	**9R-7941**	1	SOCKET AS	
		1	**9R-7980**	1	COVER	
	2	1	**245-7760**	8	INSULATION	
	3	1	**251-0637**	1	INSULATION	
	4	1	**259-4883**	1	ANTENNA AS	
Y	5	1	**449-0348**	2	HARNESS AS-LIGHTING (CAB FLOODLIGHT)	144
Y	6	1	**450-0675**	1	HARNESS AS-CAB (ROOF)	131
	7	1	**4P-8134**	1	CLIP (LADDER)	
B	8	1	**3S-2093**	2	STRAP-CABLE	
B	9	1	**163-6795**	8	STRAP-CABLE	
E	10	1	**101-2846**		GUARD (9.5-CM EACH)	

B - USE AS REQUIRED
E - ORDER BY THE CENTIMETER
Y - SEPARATE ILLUSTRATION

431-9098 **WIRING GP-CAB** (contd.) **i07310713**

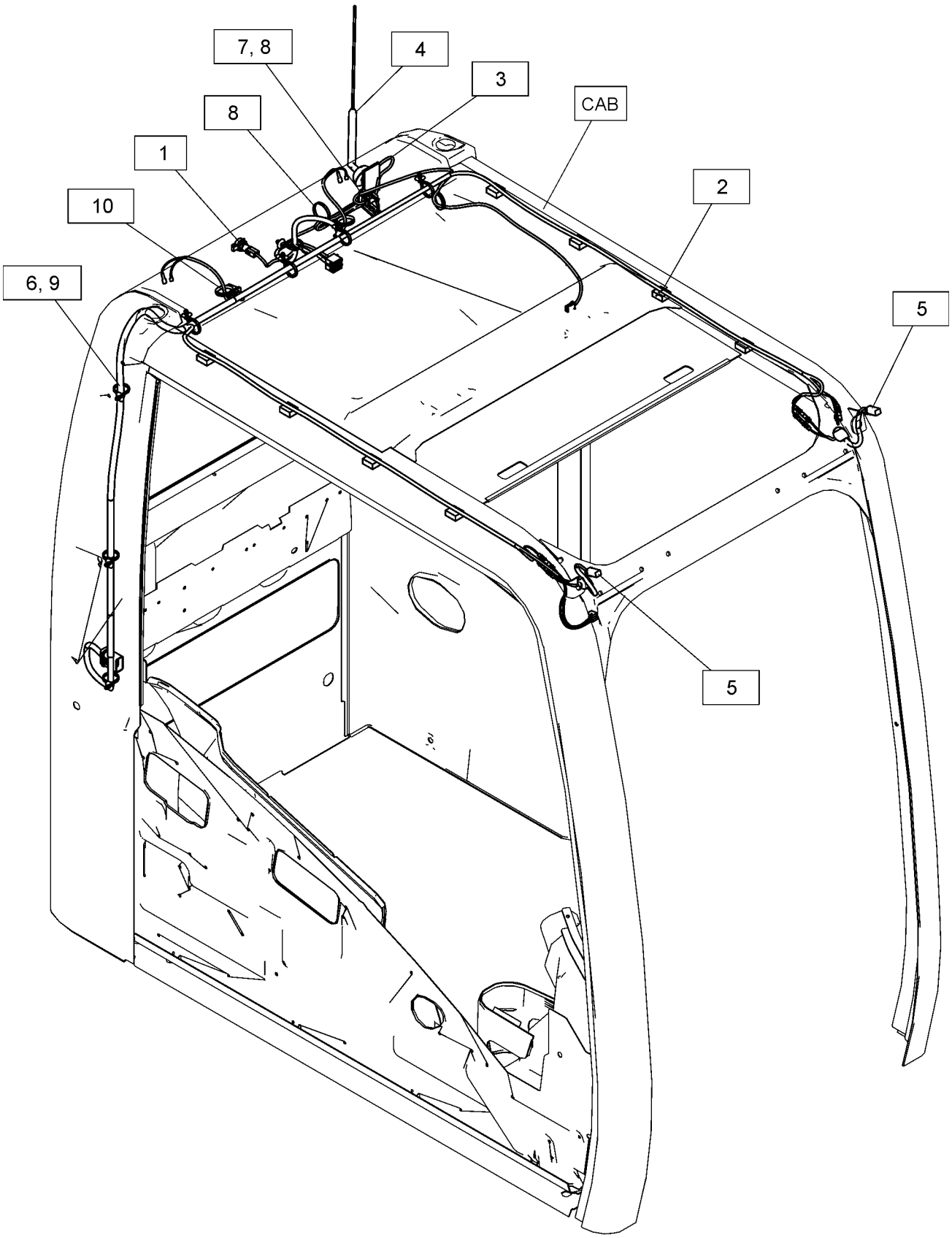

GRAPHIC #1 <END> g06299043

431-9108 WIRING GP-CAB

S/N: CH91-UP
PART OF 431-9097 ELECTRICAL AR
ALSO AN ATTACHMENT
TYPE 1

SMCS-1408, 7301 **i06671933**

NOTE	REF NO	GRAPHIC REF	PART NUMBER	QTY	PART NAME 1 2 3 4 5 6 (PRODUCT LEVEL)	SEE PAGE
	1	1	**8C-6354**	1	CAP-RECEPTACLE (ET CONNECTOR)	
	2	1	**167-3593**	1	STRAP	
	3	1	**193-9056**	1	SWITCH AS-ROCKER (HAZARD WARNING LIGHTS)	
	4	1	**193-9057**	1	SWITCH AS-ROCKER (HEADLIGHT)	
					(EACH SWITCH AS INCLUDES)	
		1	**111-7899**	1	GASKET	
	5	1	**219-5762**	1	HARNESS AS-SENSOR	
		1	**9X-3401**	3	PIN-CONNECTOR (16-GA TO 18-GA)	
		1	**102-8803**	1	KIT-RECEPTACLE (3-PIN) (40-CM)	
					(INCLUDES RECEPTACLE AS & WEDGE)	
E		1	**114-8843**		SLEEVE-PLASTIC	
	6	1	**234-1097**	1	BRACKET	
	7	1	**238-2318**	1	LIGHTER AS-CIGAR (24-VOLT)	
	8	1	**337-5751**	1	SWITCH AS-ROCKER (FLOODLIGHT)	
		1	**111-7899**	1	GASKET	
	9	1	**338-2368**	1	PLUG-BUTTON	
	10	1	**352-3209**	1	FRAME	
	11	1	**476-0305**	1	PANEL AS-CONTROL	
		1	**483-1262**	1	KNOB	
Y	12	1	**377-1848**	1	HARNESS AS-CAB	130
M	13	1	**095-0723**	3	SCREW-SPECIAL (M3X0.5X10-MM)	
	14	1	**096-6166**	4	WASHER-HARD (4.5X9X1-MM THK)	
	15	1	**120-0090**	3	WASHER (3.2X7X0.5-MM THK)	
B	16	1	**163-6795**	7	STRAP-CABLE	
	17	1	**3F-9556**	2	LOCKWASHER	
M	18	1	**5C-2890**	2	NUT (M6X1-THD)	
M	19	1	**5C-7261**	1	NUT (M8X1.25-THD)	
	20	1	**5P-4116**	1	WASHER-HARD (8.8X20.5X2-MM THK)	
M	21	1	**6V-5210**	4	SCREW-MACHINE (M4X0.7X10-MM)	
B	22	1	**7K-1181**	1	STRAP-CABLE	
	23	1	**9X-8256**	2	WASHER (6.6X12X2-MM THK)	
B	24	1	**3S-2093**	3	STRAP-CABLE	

B - USE AS REQUIRED
E - ORDER BY THE CENTIMETER
M - METRIC PART
Y - SEPARATE ILLUSTRATION

431-9108 **WIRING GP-CAB** (contd.) **i06671933**

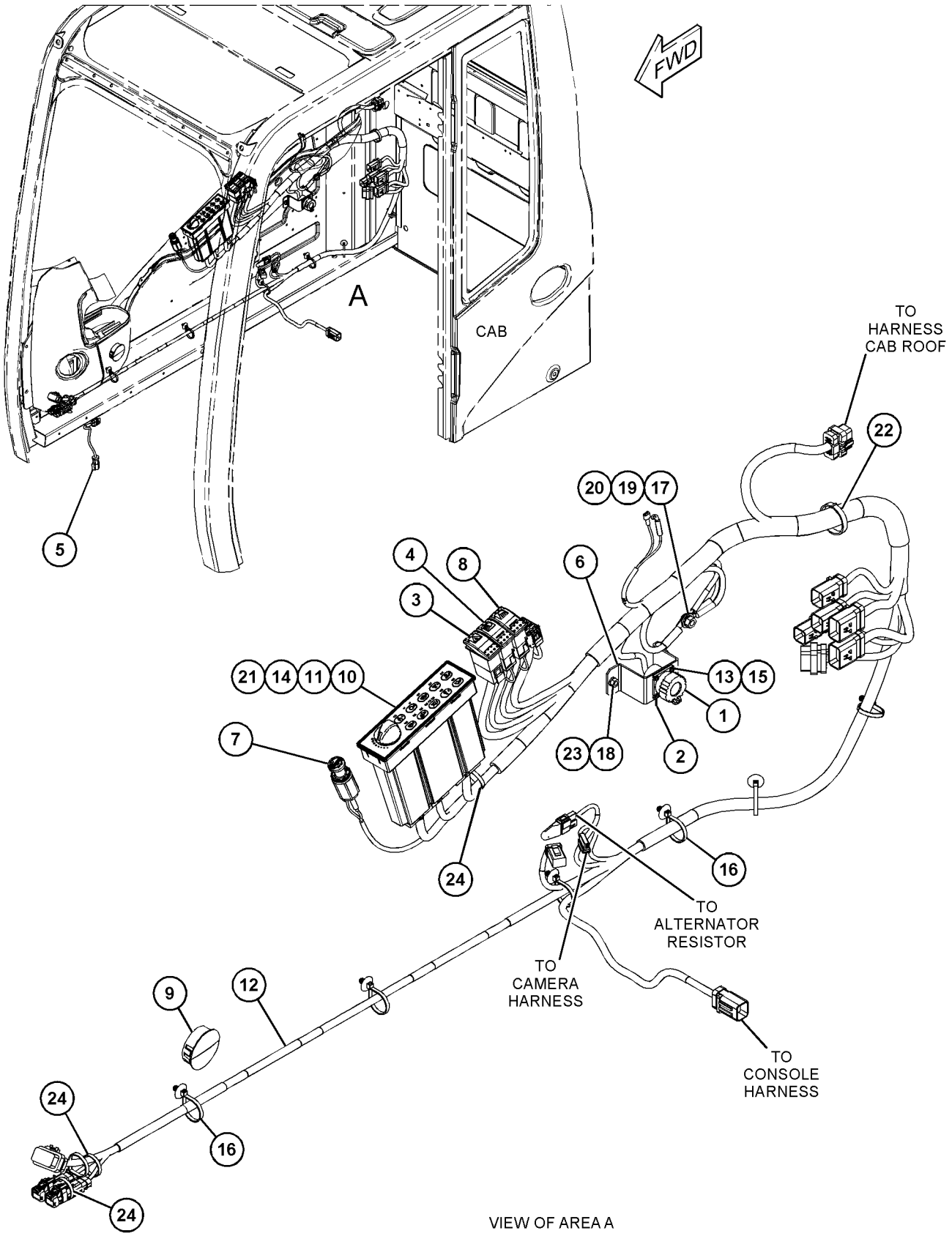

GRAPHIC #1 <END> g06133051

431-9108 WIRING GP-CAB

S/N: CH91-UP
PART OF 431-9097 ELECTRICAL AR
ALSO AN ATTACHMENT
TYPE 2

SMCS-1408, 7301 **i06834635**

NOTE	REF NO	GRAPHIC REF	PART NUMBER	QTY	PART NAME 1 2 3 4 5 6 (PRODUCT LEVEL)	SEE PAGE
B	1	1	**3S-2093**	3	STRAP-CABLE	
	3	1	**193-9056**	1	SWITCH AS-ROCKER (HAZARD WARNING LIGHTS)	
	4	1	**193-9057**	1	SWITCH AS-ROCKER (HEADLIGHT)	
					(EACH SWITCH AS INCLUDES)	
		1	**111-7899**	1	GASKET	
	5	1	**219-5762**	1	HARNESS AS-SENSOR (PUMP)	
		1	**9X-3401**	3	PIN-CONNECTOR (16-GA TO 18-GA)	
		1	**102-8803**	1	KIT-RECEPTACLE (3-PIN) (40-CM)	
					(INCLUDES RECEPTACLE AS & WEDGE)	
E		1	**114-8843**		SLEEVE-PLASTIC	
	7	1	**238-2318**	1	LIGHTER AS-CIGAR (24-VOLT)	
	8	1	**337-5751**	1	SWITCH AS-ROCKER (FLOODLIGHT)	
		1	**111-7899**	1	GASKET	
	9	1	**338-2368**	1	PLUG-BUTTON	
	10	1	**352-3209**	1	FRAME	
	11	1	**476-0305**	1	PANEL AS-CONTROL	
		1	**483-1262**	1	KNOB	
CY	12	1	**476-0308**	1	HARNESS AS-CAB	132
	14	1	**096-6166**	4	WASHER-HARD (4.5X9X1-MM THK)	
B	16	1	**163-6795**	7	STRAP-CABLE	
	17	1	**3F-9556**	2	LOCKWASHER	
M	19	1	**5C-7261**	1	NUT (M8X1.25-THD)	
	20	1	**5P-4116**	1	WASHER-HARD (8.8X20.5X2-MM THK)	
M	21	1	**6V-5210**	4	SCREW-MACHINE (M4X0.7X10-MM)	
B	22	1	**7K-1181**	1	STRAP-CABLE	

B - USE AS REQUIRED
C - CHANGE FROM PREVIOUS TYPE
E - ORDER BY THE CENTIMETER
M - METRIC PART
Y - SEPARATE ILLUSTRATION

431-9108 **WIRING GP-CAB** (contd.) **i06834635**

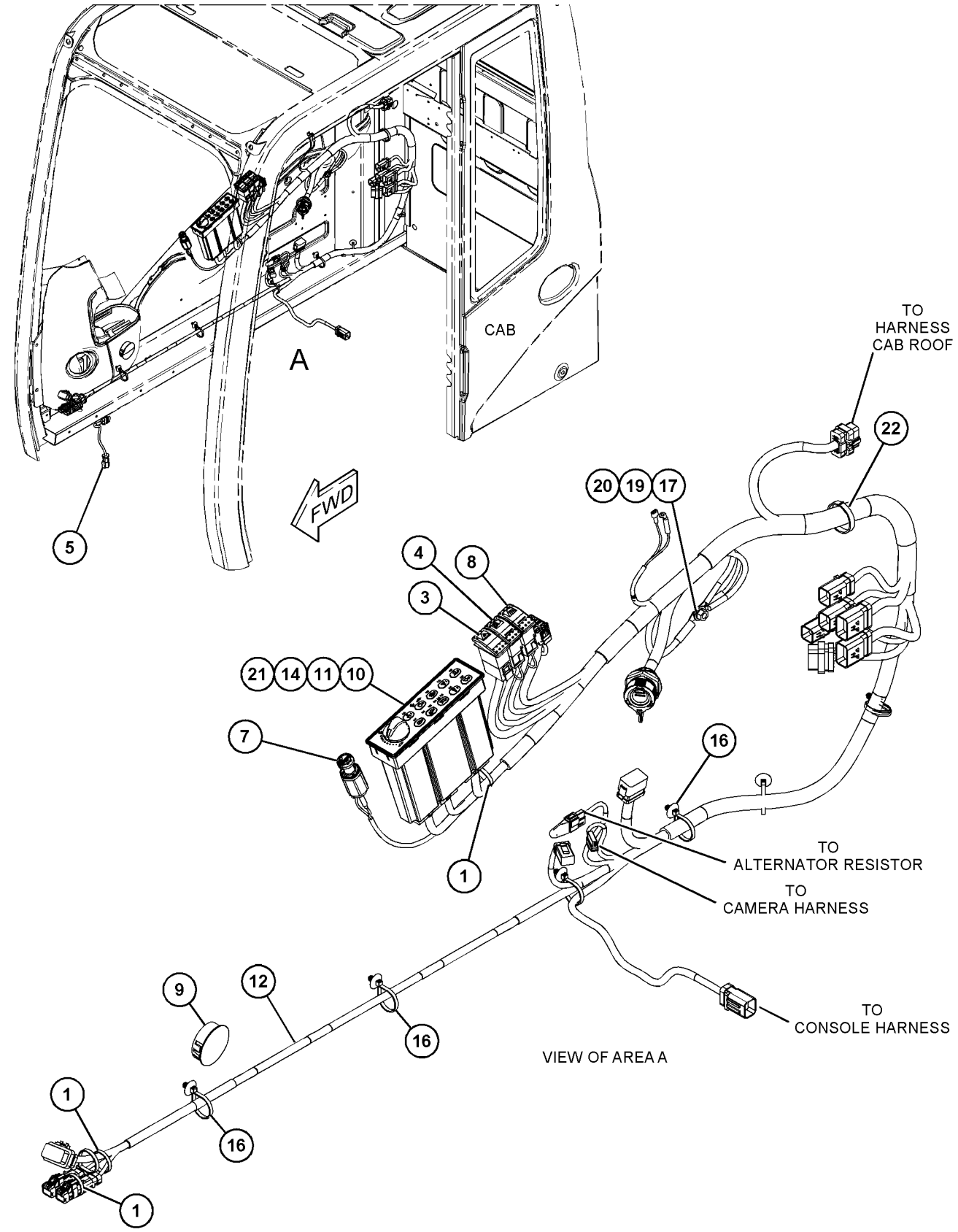

GRAPHIC #1 <END> g06135799

337-5816 WIRING GP-CAMERA–UPPER

S/N: CH91-UP
PART OF 396-4423 ELECTRICAL AR
ALSO AN ATTACHMENT

SMCS-1408, 7348 **i05496555**

NOTE	REF NO	GRAPHIC REF	PART NUMBER	QTY	PART NAME 1 2 3 4 5 6 (PRODUCT LEVEL)	SEE PAGE
	1	1	**251-4169**	1	CABLE AS-COMMUNICATION (11-M)	
	2	1	**265-5571**	1	PLATE	
Y	3	1	*337-5775*	1	BRACKET GP-MOUNTING (REAR VIEW, CAMERA)	760
B	4	1	**3S-2093**	15	STRAP-CABLE	
	5	1	**4P-7581**	1	CLIP (LADDER)	
	6	1	**5P-4116**	2	WASHER-HARD (8.8X20.5X2-MM THK)	
B	7	1	**7K-1181**	5	STRAP-CABLE	
M	8	1	**8T-4908**	2	BOLT (M8X1.25X25-MM)	

B - USE AS REQUIRED
M - METRIC PART
Y - SEPARATE ILLUSTRATION

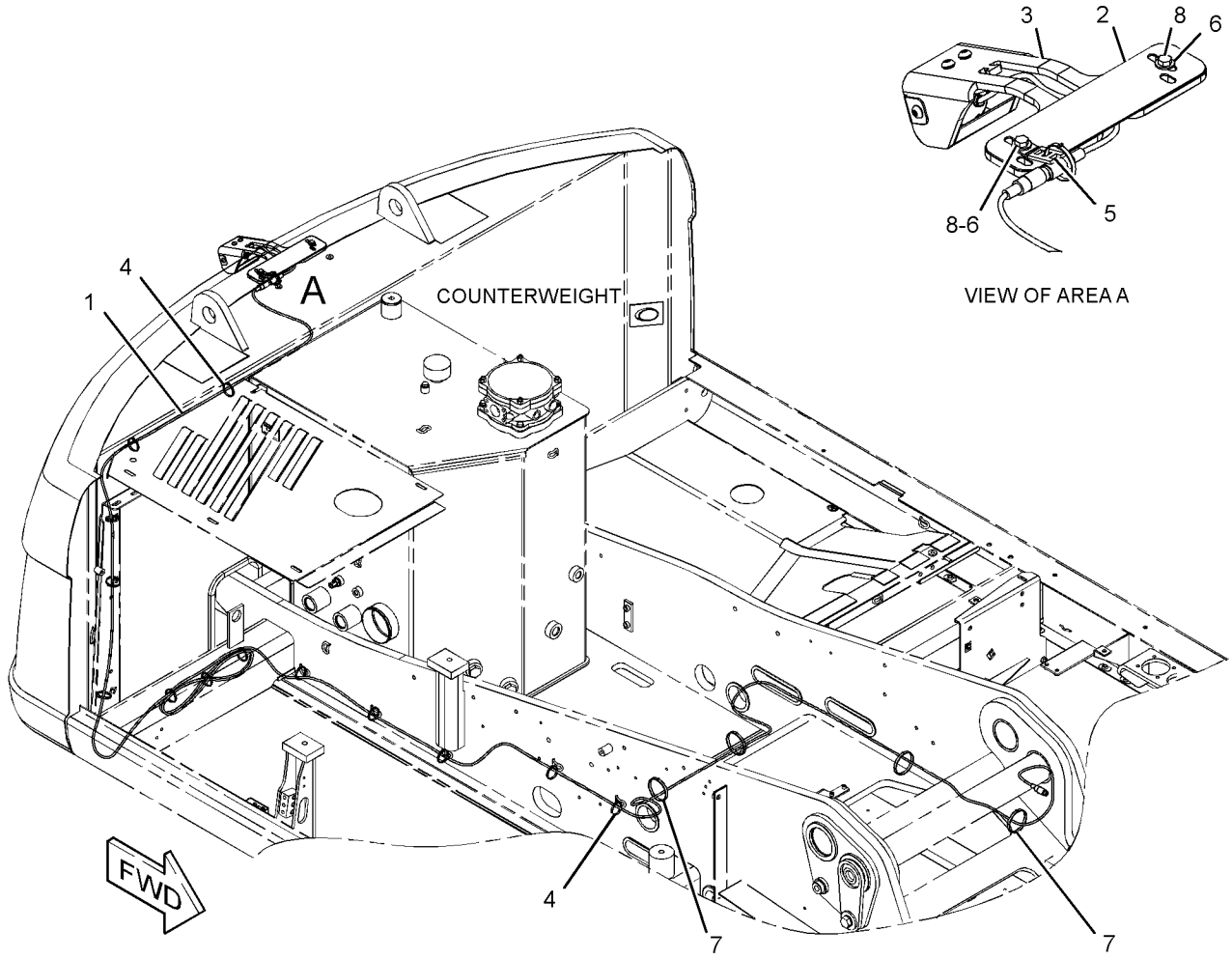

GRAPHIC #1 <END> g02373436

377-1867 WIRING GP-CHASSIS—ENGINE ECM

S/N: CH91-UP
PART OF 396-4423 ELECTRICAL AR
ALSO AN ATTACHMENT

SMCS-1408 **i05970851**

NOTE	REF NO	GRAPHIC REF	PART NUMBER	QTY	PART NAME 1 2 3 4 5 6 (PRODUCT LEVEL)	SEE PAGE
B	1	1	**3S-2093**	17	STRAP-CABLE	
	2	1	**6C-9089**	1	NUT-CAP	
	3	1	**7K-1181**	1	STRAP-CABLE	
Y	4	1	**377-1868**	1	HARNESS AS-ENGINE (ECM)	141
	5	1	**132-5789**	2	CLIP (LADDER)	
	6	1	**193-3973**	1	STRAP-CABLE	
M	7	1	**232-1693**	1	BOLT-FLANGE HEAD (M6X1X35-MM)	
	8	1	**293-9452**	1	MOUNTING-CABLE TIE	
	9	1	**352-3968**	1	CLIP (LADDER)	
M	10	1	**5C-9553**	1	BOLT (M6X1X16-MM)	
M	11	1	**8T-4200**	1	BOLT (M8X1.25X16-MM)	
	12	1	**8T-4224**	1	WASHER-HARD (8.8X16X2-MM THK)	
	13	1	**9X-8256**	1	WASHER (6.6X12X2-MM THK)	

B - USE AS REQUIRED
M - METRIC PART
Y - SEPARATE ILLUSTRATION

377-1867 **WIRING GP-CHASSIS (**contd.**)** **i05970851**

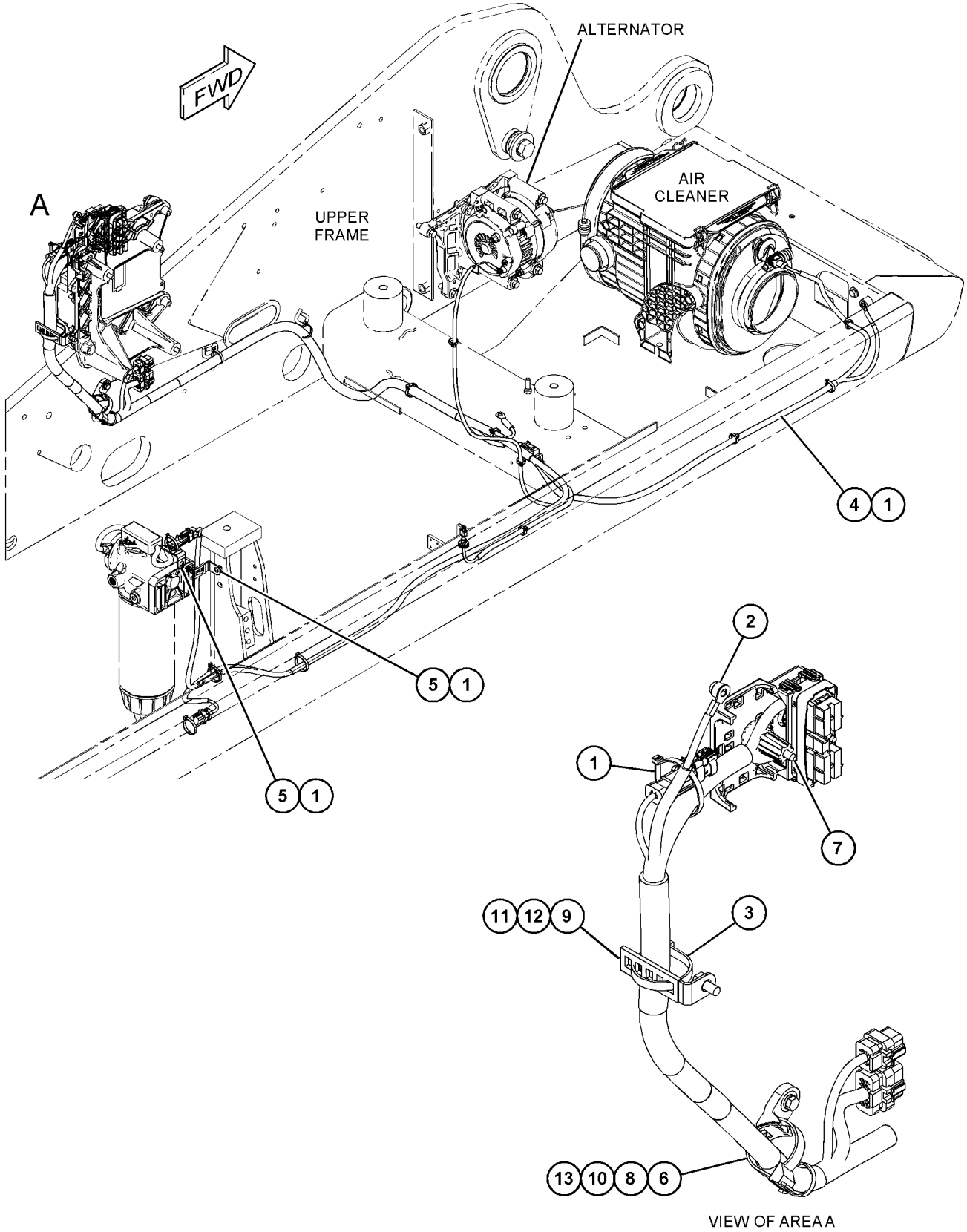

GRAPHIC #1 <END> g03745449

377-1869 WIRING GP-CHASSIS—ELECTRIC

S/N: CH91-UP
PART OF 396-4423 ELECTRICAL AR
ALSO AN ATTACHMENT

SMCS-1408 **i05970853**

NOTE	REF NO	GRAPHIC REF	PART NUMBER	QTY	PART NAME 1 2 3 4 5 6 (PRODUCT LEVEL)	SEE PAGE
B	1	2	**3S-2093**	37	STRAP-CABLE	
B	2	2	**7K-1181**	17	STRAP-CABLE	
	3	2	**9R-7941**	1	SOCKET AS	
		2	**9R-7980**	1	COVER	
	4	2	**121-5327**	1	GROMMET	
	5	2	**132-1805**	1	STRAP AS-GROUND	
Y	6	2	**377-1870**	1	HARNESS AS-CHASSIS	136
	7	2	**124-7346**	1	LOCKWASHER	
	8	2	**3F-9556**	6	LOCKWASHER	
	9	2	**4P-7428**	1	CLIP (LADDER)	
M	10	2	**5C-7261**	3	NUT (M8X1.25-THD)	
	11	2	**5P-4116**	3	WASHER-HARD (8.8X20.5X2-MM THK)	
	12	2	**8T-4121**	1	WASHER-HARD (11X21X2.5-MM THK)	
M	13	2	**8T-4191**	1	BOLT (M10X1.5X16-MM)	

B - USE AS REQUIRED
M - METRIC PART
Y - SEPARATE ILLUSTRATION

REFER TO ALL ILLUSTRATIONS OF
THIS GROUP FOR AUXILIARY VIEWS

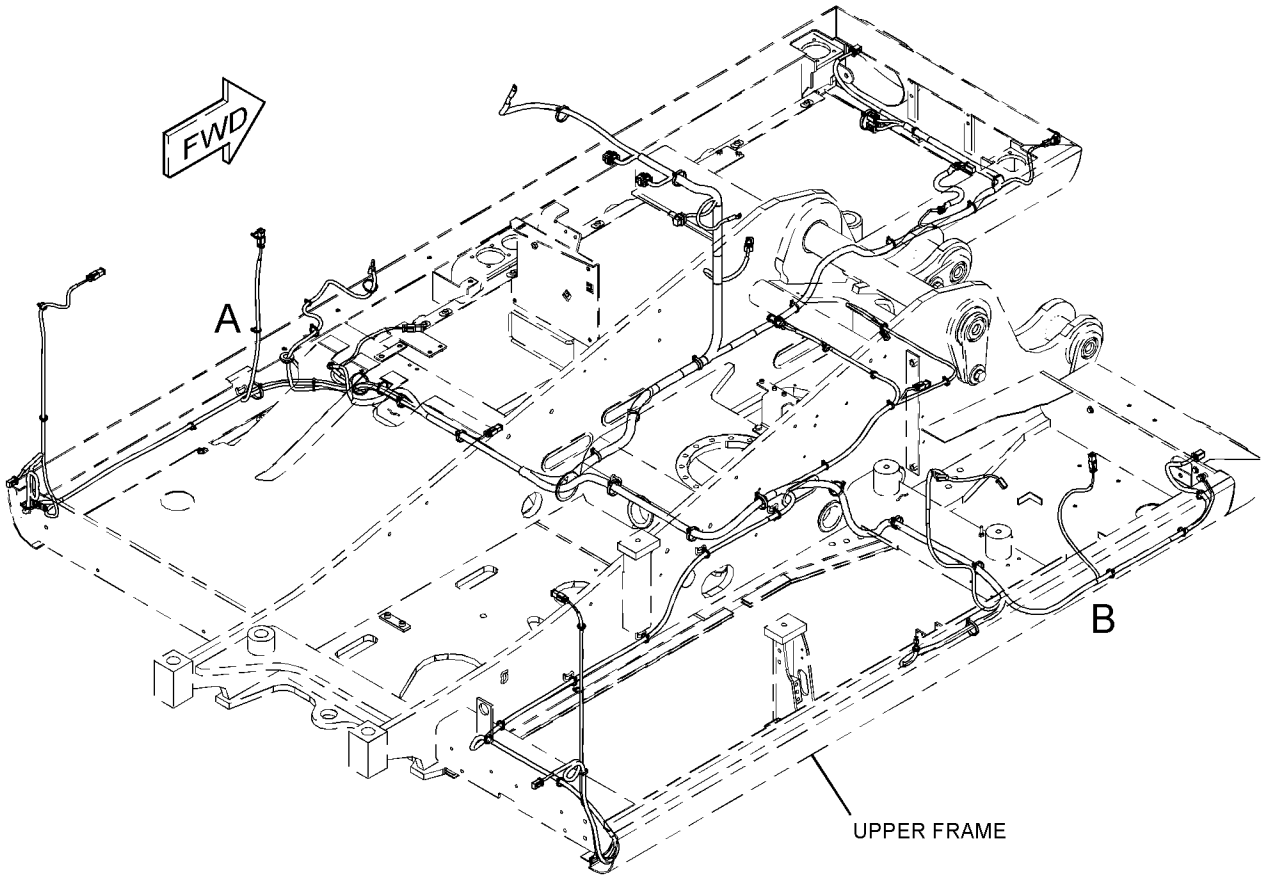

GRAPHIC #1 g03743689

377-1869 **WIRING GP-CHASSIS (**contd.**)** **i05970853**

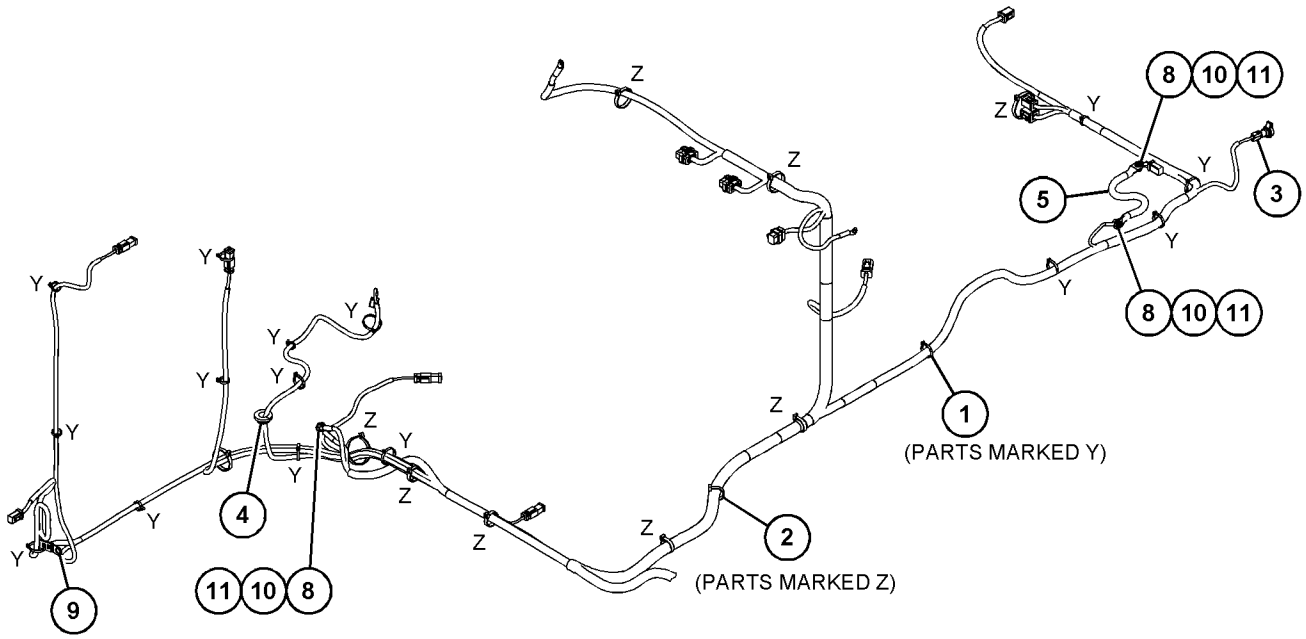

VIEW OF AREA A

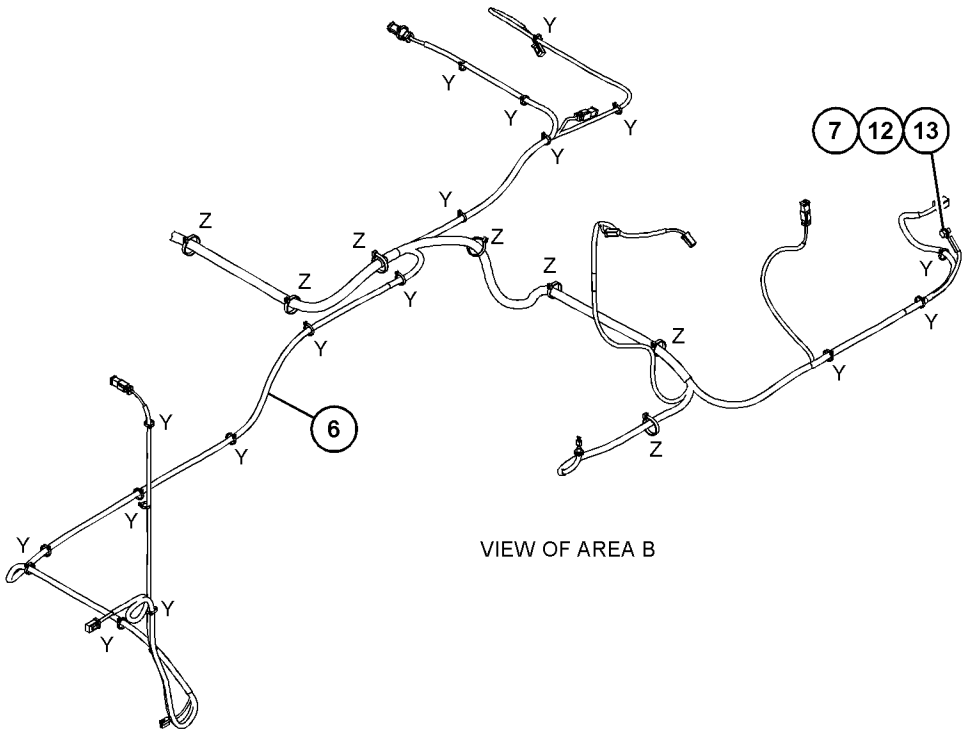

VIEW OF AREA B

GRAPHIC #2 <END> g03743686

377-1926 WIRING GP-CHASSIS—ELECTRONIC

S/N: CH91-UP
PART OF 396-4423 ELECTRICAL AR
ALSO AN ATTACHMENT

SMCS-1408 **i05934486**

NOTE	REF NO	GRAPHIC REF	PART NUMBER	QTY	PART NAME 1 2 3 4 5 6 (PRODUCT LEVEL)	SEE PAGE
Y	1	1	**337-5767**	1	HARNESS AS-CHASSIS (ELECTRONIC)	134
	2	1	**3S-2093**	40	STRAP-CABLE	
	3	1	**7K-1181**	29	STRAP-CABLE	

Y - SEPARATE ILLUSTRATION

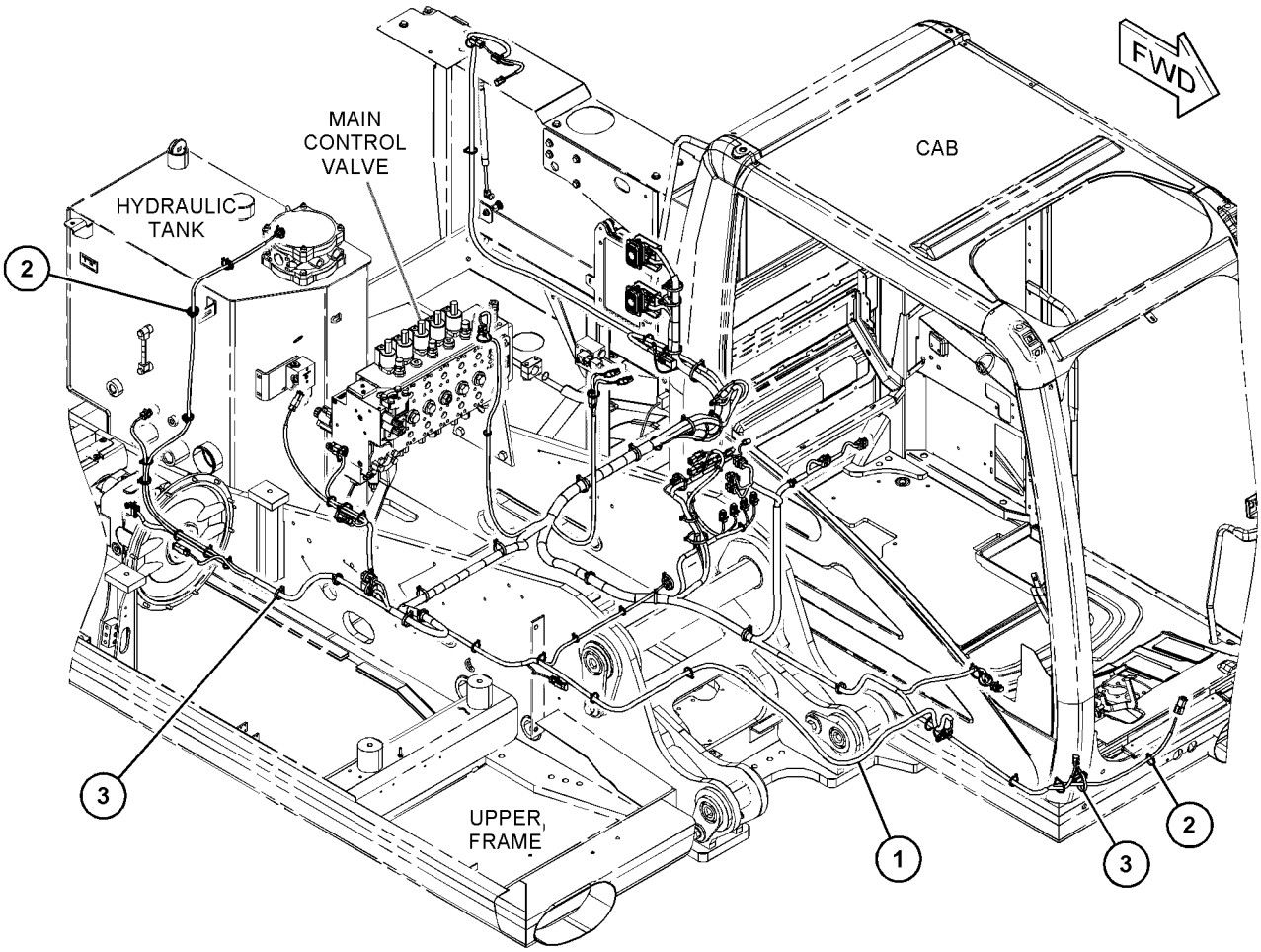

GRAPHIC #1 <END> g03567056

337-5752 WIRING GP-CONSOLE

S/N: CH91-UP
PART OF 431-9097 ELECTRICAL AR
ALSO AN ATTACHMENT

SMCS-1408 **i05510214**

NOTE	REF NO	GRAPHIC REF	PART NUMBER	QTY	PART NAME 1 2 3 4 5 6 (PRODUCT LEVEL)	SEE PAGE
	1	1	**194-7843**	1	MAGNET	
	2	1	**220-5815**	6	SCREW-PAN HEAD	
	3	1	**240-1366**	1	SWITCH AS-POSITION (JOYSTICK)	
	4	1	**322-8964**	1	SWITCH AS-START (KEY) (ENGINE)	
		1	**7T-6799**	1	NUT-MOUNTING (1-32-THD)	
		1	**8T-8729**	4	PIN-CONNECTOR (16-GA TO 20-GA)	
		1	**243-4507**	1	RECEPTACLE AS-CONNECTOR (4-PIN)	
	5	1	**337-5753**	1	HARNESS AS-CONSOLE	
E		1	**292-2896**		CONDUIT (16.9-MM ID) (176-CM)	
		1	**111-7898**	4	CONNECTOR (8-PIN)	
		1	**9X-3401**	22	PIN-CONNECTOR (16-GA TO 18-GA)	
		1	**155-2260**	3	KIT-CONNECTING PLUG (3-PIN)	
		1	**155-2271**	1	KIT-CONNECTING PLUG (4-PIN)	
		1	**155-2274**	2	KIT-CONNECTING PLUG (6-PIN)	
					(EACH PLUG KIT INCLUDES PLUG AS,WEDGE & INTRFACE SEAL)	
		1	**230-5008**	1	PLUG AS-CONNECTOR (4-PIN)	
		1	**264-7031**	1	SEAL-CONNECTOR	
		1	**231-2295**	1	PLUG AS-CONNECTOR (8-PIN)	
		1	**264-7033**	1	SEAL-CONNECTOR	
		1	**8T-8737**	4	PLUG-SEAL	
		1	**239-7353**	1	RECEPTACLE AS-CONNECTOR (6-PIN)	
		1	**241-8835**	1	RECEPTACLE AS-CONNECTOR (12-PIN)	
		1	**281-8812**	1	RECEPTACLE AS-CONNECTOR (6-PIN)	
		1	**8T-8730**	18	SOCKET-CONNECTOR (16-GA TO 18-GA)	
		1	**9X-3402**	6	SOCKET-CONNECTOR (16-GA TO 18-GA)	
		1	**9X-3402**	11	SOCKET-CONNECTOR (16-GA TO 18-GA)	
		1	**5W-1987**	2	TERMINAL-BLADE (12-GA TO 16-GA)	
B		1	**1P-0810**		TAPE-ELECTRICAL	
		1	**104-1995**	18	TERMINAL-BLADE (14-GA TO 18-GA)	
E		1	**119-3662**		TUBE-HEAT SHRINK (10.85-MM DIA) (7-CM)	
E		1	**125-7874**		TUBE-HEAT SHRINK (5.72-MM DIA) (10-CM)	
E		1	**125-7875**		TUBE-HEAT SHRINK (7.44-MM DIA) (10-CM)	
	6	1	**337-5811**	1	PLATE	
M	7	1	**095-0723**	4	SCREW-SPECIAL (M3X0.5X10-MM)	
	8	1	**096-5962**	8	WASHER-HARD (3.4X7X0.8-MM THK)	
	9	1	**190-4375**	1	WASHER (26X40X2-MM THK)	
	10	1	**3S-2093**	8	STRAP-CABLE	

B - USE AS REQUIRED
E - ORDER BY THE CENTIMETER
M - METRIC PART

337-5752 **WIRING GP-CONSOLE (**contd.**)** **i05510214**

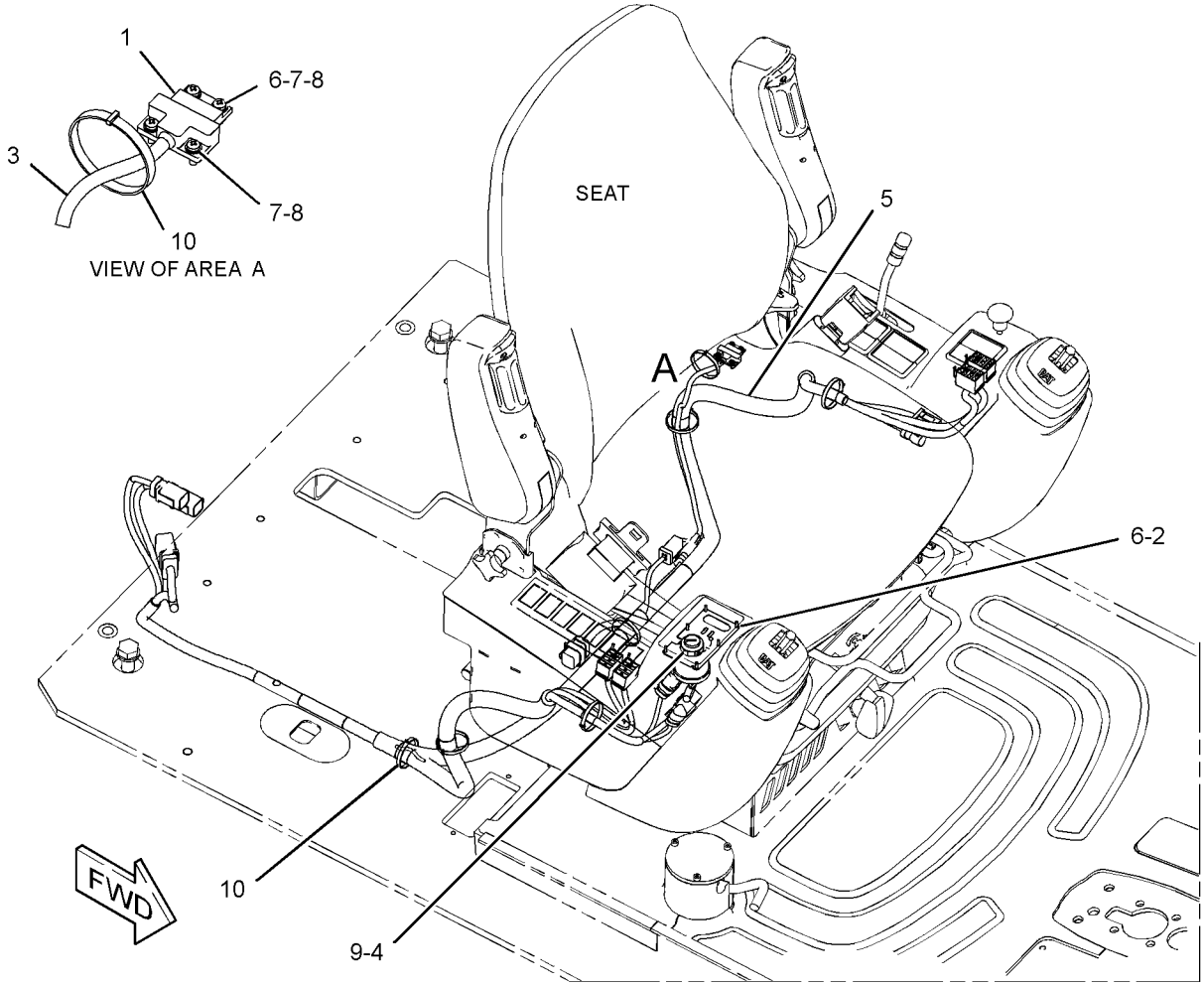

GRAPHIC #1 <END> g02426416

377-1851 WIRING GP-CONSOLE

S/N: CH91-UP
PART OF 431-9097 ELECTRICAL AR
ALSO AN ATTACHMENT

SMCS-1408 **i06882516**

NOTE	REF NO	GRAPHIC REF	PART NUMBER	QTY	PART NAME 1 2 3 4 5 6 (PRODUCT LEVEL)	SEE PAGE
	1	1	**194-7843**	1	MAGNET	
	2	1	**220-5815**	6	SCREW-PAN HEAD	
	3	1	**486-1633**	1	SWITCH AS-POSITION (ARMREST)	
J	4	1	**322-8964**	1	SWITCH AS-START (KEY) (ENGINE)	
		1	**7T-6799**	1	NUT-MOUNTING (1-32-THD)	
		1	**8T-8729**	4	PIN-CONNECTOR (16-GA TO 20-GA)	
		1	**243-4507**	1	RECEPTACLE AS-CONNECTOR (4-PIN)	
	5	1	**337-5811**	1	PLATE	
Y	6	1	**377-1852**	1	HARNESS AS-CONSOLE	137
M	7	1	**095-0723**	4	SCREW-SPECIAL (M3X0.5X10-MM)	
	8	1	**096-5962**	8	WASHER-HARD (3.4X7X0.8-MM THK)	
	9	1	**190-4375**	1	WASHER (26X40X2-MM THK)	
B	10	1	**3S-2093**	8	STRAP-CABLE	

B - USE AS REQUIRED
J - REQUIRES CORPORATE KEY
M - METRIC PART
Y - SEPARATE ILLUSTRATION

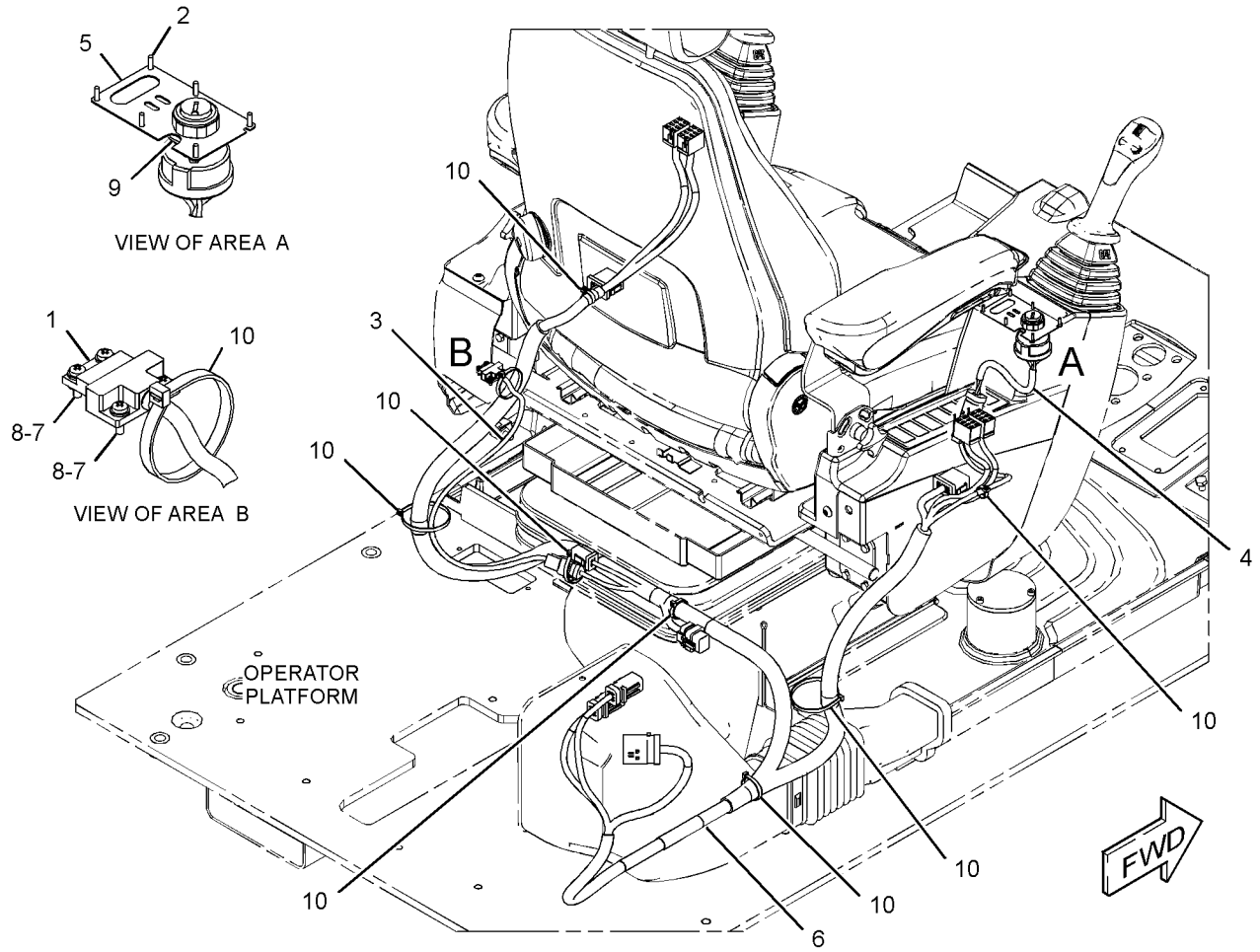

GRAPHIC #1 <END> g03335601

337-5786 WIRING GP-ELECTRONIC CONTROL

S/N: CH91-UP

PART OF 337-5818 CONTROL AR-MACHINE

AN ATTACHMENT

SMCS-1408 **i05526132**

NOTE	REF NO	GRAPHIC REF	PART NUMBER	QTY	PART NAME 1 2 3 4 5 6 (PRODUCT LEVEL)	SEE PAGE
	1	1	**337-5787**	1	HARNESS AS-CONTROL (IMPLEMENT)	
		1	**3S-2093**	2	STRAP-CABLE	
		1	**8T-8730**	12	SOCKET-CONNECTOR (16-GA TO 18-GA)	
		1	**8T-8737**	52	PLUG-SEAL	
		1	**102-8802**	6	KIT-RECEPTACLE (2-PIN)	
					(EACH INCLUDES RECEPTACLE AS & WEDGE)	
		1	**9X-3402**	38	SOCKET-CONNECTOR (16-GA TO 18-GA)	
		1	**126-1774**	1	COVER-CONNECTOR	
		1	**2L-8068**	1	TERMINAL-RING (10-GA TO 12-GA, 5/16-IN SCREW)	
		1	**9X-3401**	8	PIN-CONNECTOR (16-GA TO 18-GA)	
		1	**155-2270**	6	KIT-CONNECTING PLUG (2-PIN)	
					(EACH INCLUDES RECEPTACLE AS, WEDGE & INTERFACE SEAL)	
		1	**160-7689**	1	PLUG AS-CONNECTOR (70-PIN)	
		1	**159-9322**	1	SEAL-O-RING	
B		1	**1P-0810**		TAPE-ELECTRICAL	
		1	**231-2295**	1	PLUG AS-CONNECTOR (8-PIN)	
		1	**264-7033**	1	SEAL-CONNECTOR	
		1	**231-2300**	1	RECEPTACLE AS-CONNECTOR (8-PIN)	
		1	**342-2975**	1	CAP-CONNECTOR (8-PIN)	
	2	1	**115-5579**	2	CLIP AS-CONNECTING (2-PIN)	
	3	1	**116-0118**	2	CLIP	
B	4	1	**3S-2093**	11	STRAP-CABLE	
B	5	1	**7K-1181**	3	STRAP-CABLE	
M	6	1	**8T-4139**	1	BOLT (M12X1.75X30-MM)	
	7	1	**8T-4223**	2	WASHER-HARD (13.5X25.5X3-MM THK)	
M	8	1	**8T-4244**	1	NUT (M12X1.75-THD)	
	9	1	**8T-4121**	2	WASHER-HARD (11X21X2.5-MM THK)	

B - USE AS REQUIRED
M - METRIC PART

337-5786 **WIRING GP-ELECTRONIC CONTROL** (contd.) **i05526132**

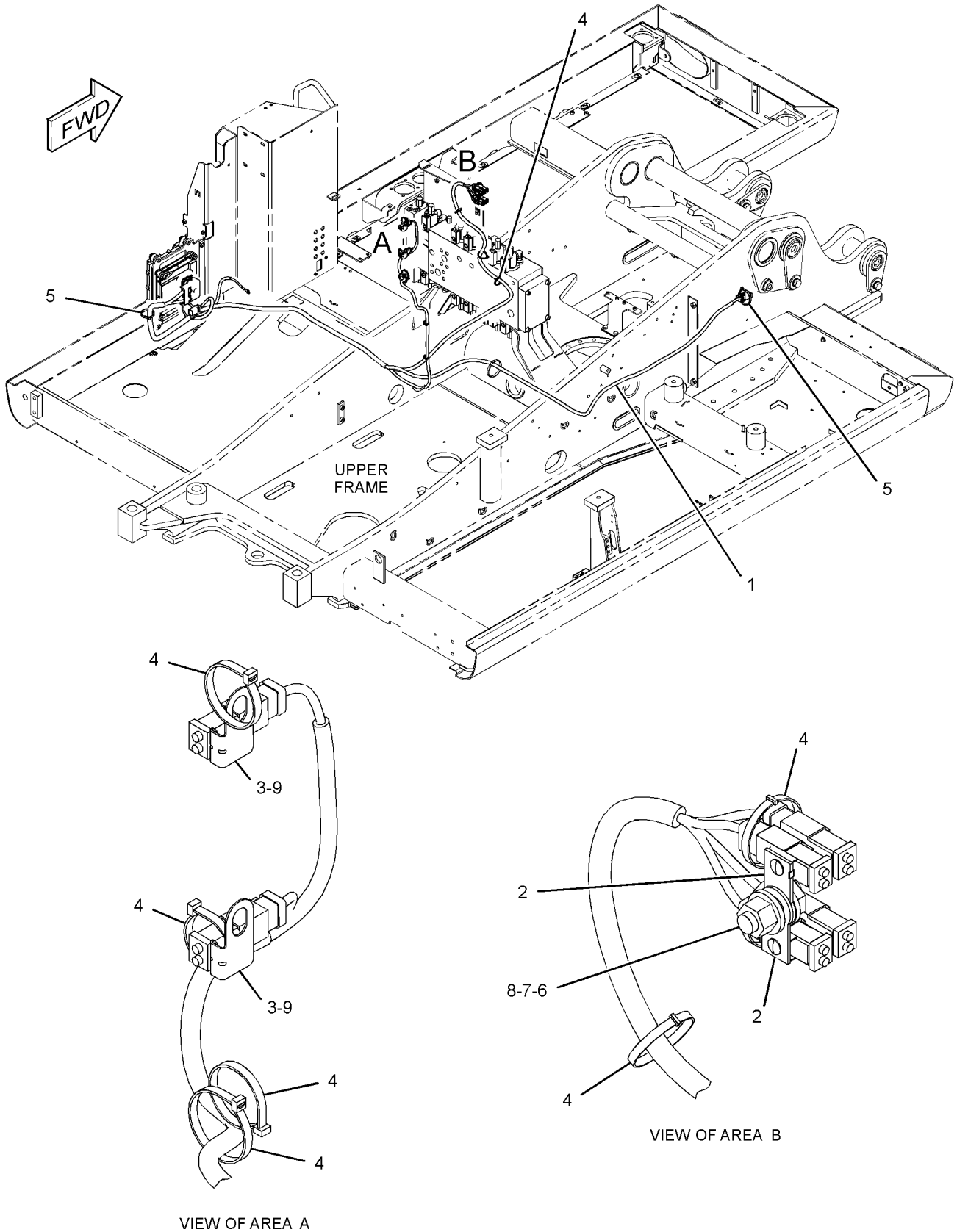

GRAPHIC #1 <END> g03340082

395-0113 WIRING GP-ENGINE

S/N: E7A1-UP
PART OF 446-6728 ENGINE AR-PRIMARY
ALSO AN ATTACHMENT
TYPE 1

SMCS-1408 **i05954940**

NOTE	REF NO	GRAPHIC REF	PART NUMBER	QTY	PART NAME 1 2 3 4 5 6 (PRODUCT LEVEL)	SEE PAGE
C	1	1	**323-7347**	3	SEAL-O-RING	
CM	2	1	**254-3633**	3	BOLT-FLANGE HEAD (M6X1X16-MM, SELF LOCKING)	
M	3	1	**124-3815**	4	BOLT (M8X1.25X16-MM)	
	4	1	**217-9039**	1	STRAP-CABLE	
	5	1	**348-4637**	1	BOLT	
C	6	1	**458-3745**	3	HARNESS AS-PLATFORM	
					(EACH INCLUDES)	
		1	**332-7865**	1	TIE-CABLE	
	7	1	**377-1293**	1	BRACKET	
Y	8	1	**385-5997**	1	HARNESS AS-ENGINE	143
	9	1	**389-3863**	1	BRACKET	
	10	1	**392-2780**	1	BRACKET	
	11	1	**132-5789**	1	CLIP (LADDER)	
M	12	1	**232-1693**	1	BOLT-FLANGE HEAD (M6X1X35-MM)	

C - CHANGE FROM PREVIOUS TYPE
M - METRIC PART
Y - SEPARATE ILLUSTRATION

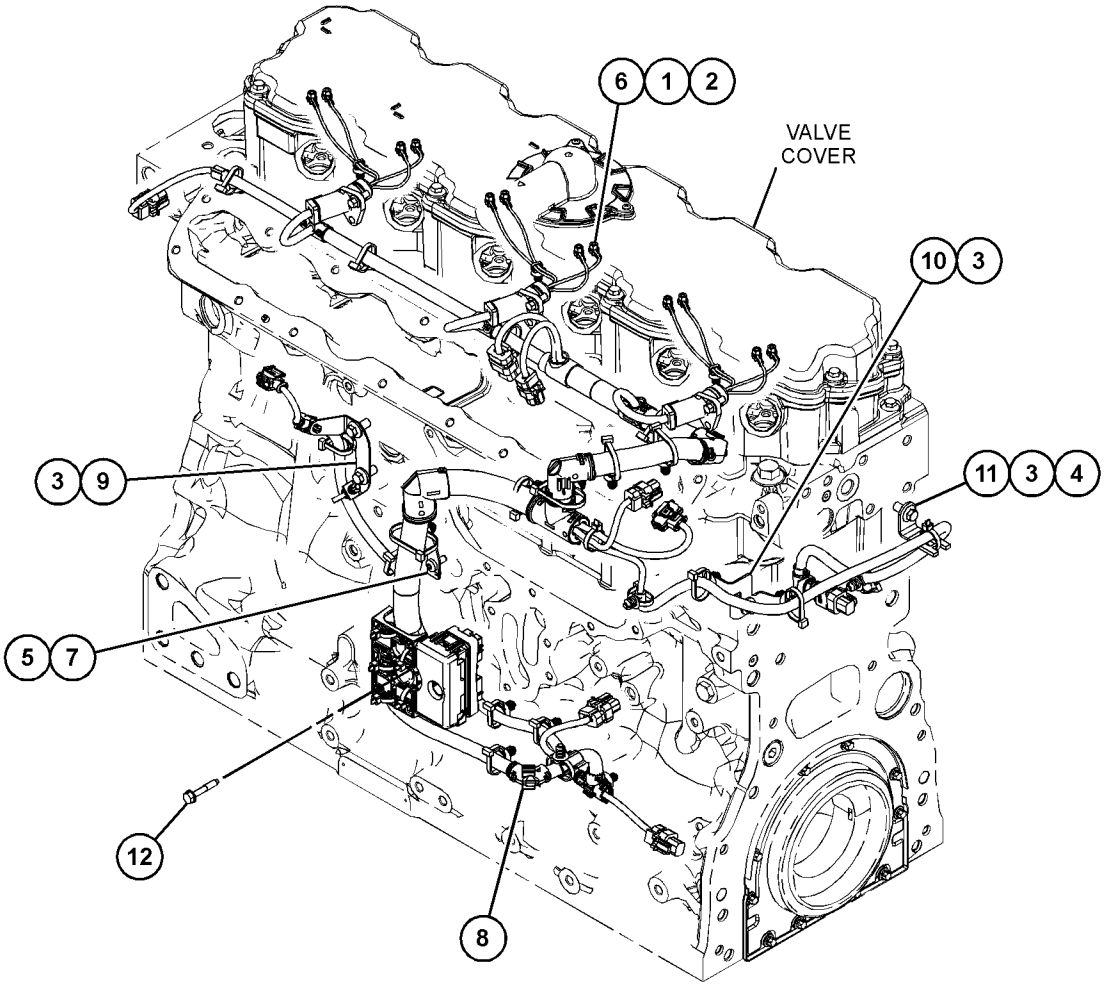

GRAPHIC #1 <END> g03739892

395-0113 WIRING GP-ENGINE

S/N: E7A1-UP

PART OF 446-6728 ENGINE AR-PRIMARY

SMCS-1408 **i06862354**

NOTE	REF NO	GRAPHIC REF	PART NUMBER	QTY	PART NAME 1 2 3 4 5 6 (PRODUCT LEVEL)	SEE PAGE
	1	1	**277-5064**	3	SEAL-O-RING	
	2	1	**277-5065**	3	CLIP	
M	3	1	**124-3815**	4	BOLT (M8X1.25X16-MM)	
	4	1	**217-9039**	1	STRAP-CABLE	
	5	1	**348-4637**	1	BOLT	
Y	6	1	**375-8407**	3	HARNESS AS-WIRING (INJECTOR)	147
	7	1	**377-1293**	1	BRACKET	
Y	8	1	**385-5997**	1	HARNESS AS-ENGINE	143
	9	1	**389-3863**	1	BRACKET	
	10	1	**392-2780**	1	BRACKET	
	11	1	**132-5789**	1	CLIP (LADDER)	
M	12	1	**232-1693**	1	BOLT-FLANGE HEAD (M6X1X35-MM)	

M - METRIC PART
Y - SEPARATE ILLUSTRATION

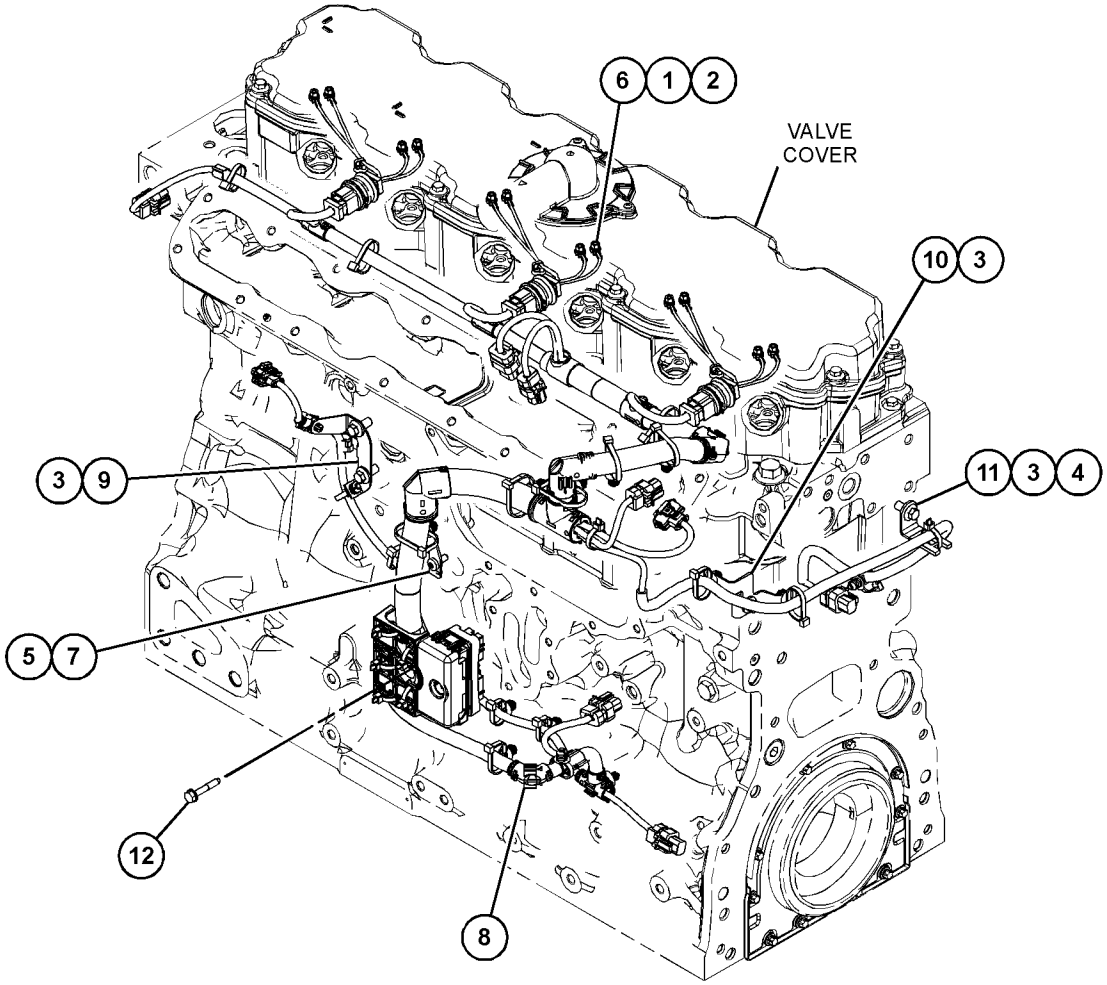

GRAPHIC #1 <END> g03731718

395-0113 WIRING GP-ENGINE

S/N: E7A1-UP
PART OF 446-6728 ENGINE AR-PRIMARY
ALSO AN ATTACHMENT
TYPE 2

SMCS-1408 **i06997750**

NOTE	REF NO	GRAPHIC REF	PART NUMBER	QTY	PART NAME 1 2 3 4 5 6 (PRODUCT LEVEL)	SEE PAGE
C	1	1	**033-6034**	3	SEAL-O-RING	
C	2	1	**277-5065**	3	CLIP	
M	3	1	**124-3815**	4	BOLT (M8X1.25X16-MM)	
	4	1	**217-9039**	1	STRAP-CABLE	
	5	1	**348-4637**	1	BOLT	
CY	6	1	**375-8407**	3	HARNESS AS-WIRING (INJECTOR)	147
	7	1	**377-1293**	1	BRACKET	
Y	8	1	**385-5997**	1	HARNESS AS-ENGINE	143
	9	1	**389-3863**	1	BRACKET	
	10	1	**392-2780**	1	BRACKET	
	11	1	**132-5789**	1	CLIP (LADDER)	
M	12	1	**232-1693**	1	BOLT-FLANGE HEAD (M6X1X35-MM)	

C - CHANGE FROM PREVIOUS TYPE
M - METRIC PART
Y - SEPARATE ILLUSTRATION

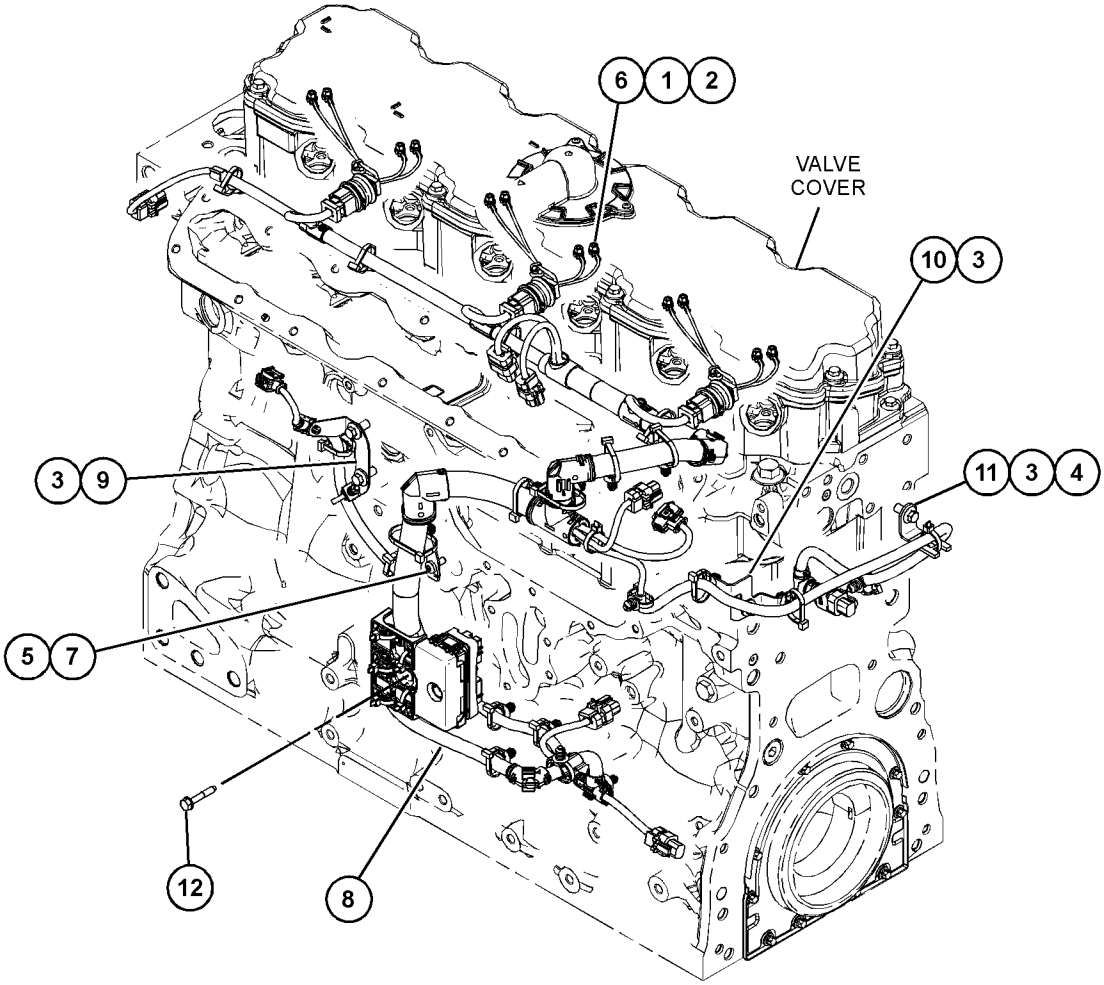

GRAPHIC #1 <END> g06177895

253-9849 WIRING GP-FAN

S/N: CH91-UP
PART OF 454-7364 COOLING AR
ALSO AN ATTACHMENT

SMCS-1408 **i06023401**

NOTE	REF NO	GRAPHIC REF	PART NUMBER	QTY	PART NAME 1 2 3 4 5 6 (PRODUCT LEVEL)	SEE PAGE
	1	1	**263-7512**	1	HARNESS AS-SOLENOID (FAN)	
		1	**155-2270**	2	KIT-CONNECTING PLUG (2-PIN)	
					(EACH INCLUDES PLUG AS, WEDGE & INTERFACE SEAL)	
E		1	**114-8843**		SLEEVE-PLASTIC (40-CM)	
		1	**8T-8730**	4	SOCKET-CONNECTOR (16-GA TO 18-GA)	
Y	2	1	**276-8614**	1	HARNESS AS-SENSOR (FAN SPEED)	145
B	3	1	**3S-2093**	3	STRAP-CABLE	

B - USE AS REQUIRED
E - ORDER BY THE CENTIMETER
Y - SEPARATE ILLUSTRATION

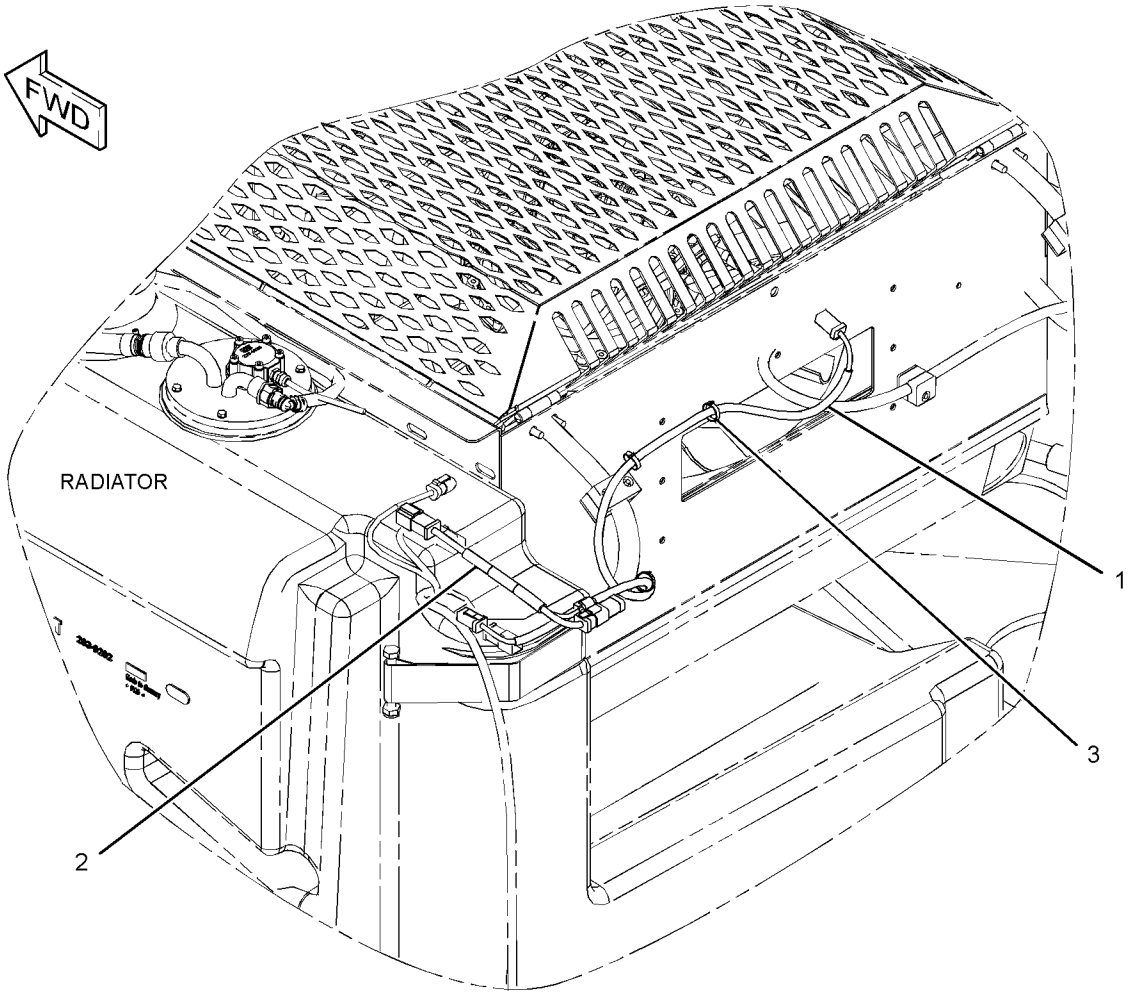

GRAPHIC #1 <END> g01319954

337-5814 WIRING GP-MONITOR–CAMERA, REAR

S/N: CH91-UP
PART OF 431-9097 ELECTRICAL AR
ALSO AN ATTACHMENT

SMCS-1408 **i05510217**

NOTE	REF NO	GRAPHIC REF	PART NUMBER	QTY	PART NAME 1 2 3 4 5 6 (PRODUCT LEVEL)	SEE PAGE
	1	1	**350-9367**	1	HARNESS AS-WIRING (CAMERA, REAR)	
		1	**7Y-3950**	2	TERMINAL-BLADE (14-GA TO 20-GA)	
		1	**7Y-3953**	1	CONNECTOR-RECEPTACLE	
		1	**8T-8737**	4	PLUG-SEAL	
		1	**9X-3402**	2	SOCKET-CONNECTOR (16-GA TO 18-GA)	
		1	**230-5010**	1	PLUG AS-CONNECTOR (6-PIN)	
		1	**264-7032**	1	SEAL-CONNECTOR	
B	2	1	**3S-2093**	2	STRAP-CABLE	

B - USE AS REQUIRED

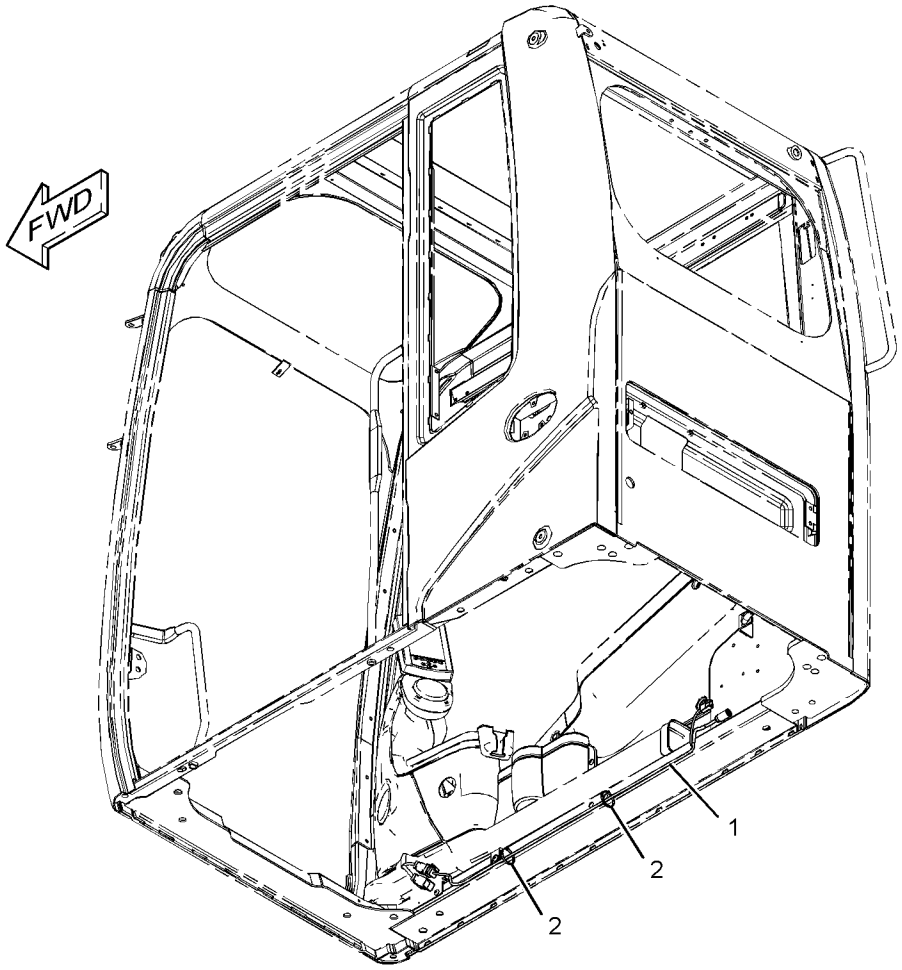

GRAPHIC #1 <END> g02358967

337-5792 WIRING GP-RIDE CONTROL

S/N: CH91-UP
PART OF 446-2738 VALVE & LINES AR
AN ATTACHMENT

SMCS-1408, 5004 **i05908857**

NOTE	REF NO	GRAPHIC REF	PART NUMBER	QTY	PART NAME 1 2 3 4 5 6 (PRODUCT LEVEL)	SEE PAGE
B	1	1	**3S-2093**	4	STRAP-CABLE	
B	2	1	**7K-1181**	11	STRAP-CABLE	
	3	1	**290-5562**	5	MOUNT (DUAL SWIVEL)	
Y	4	1	**337-5793**	1	HARNESS AS-SENSOR (RIDE CONTROL) (RIDE CONTROL)	146
	5	1	**204-2281**	1	STRAP-CABLE	

B - USE AS REQUIRED
Y - SEPARATE ILLUSTRATION

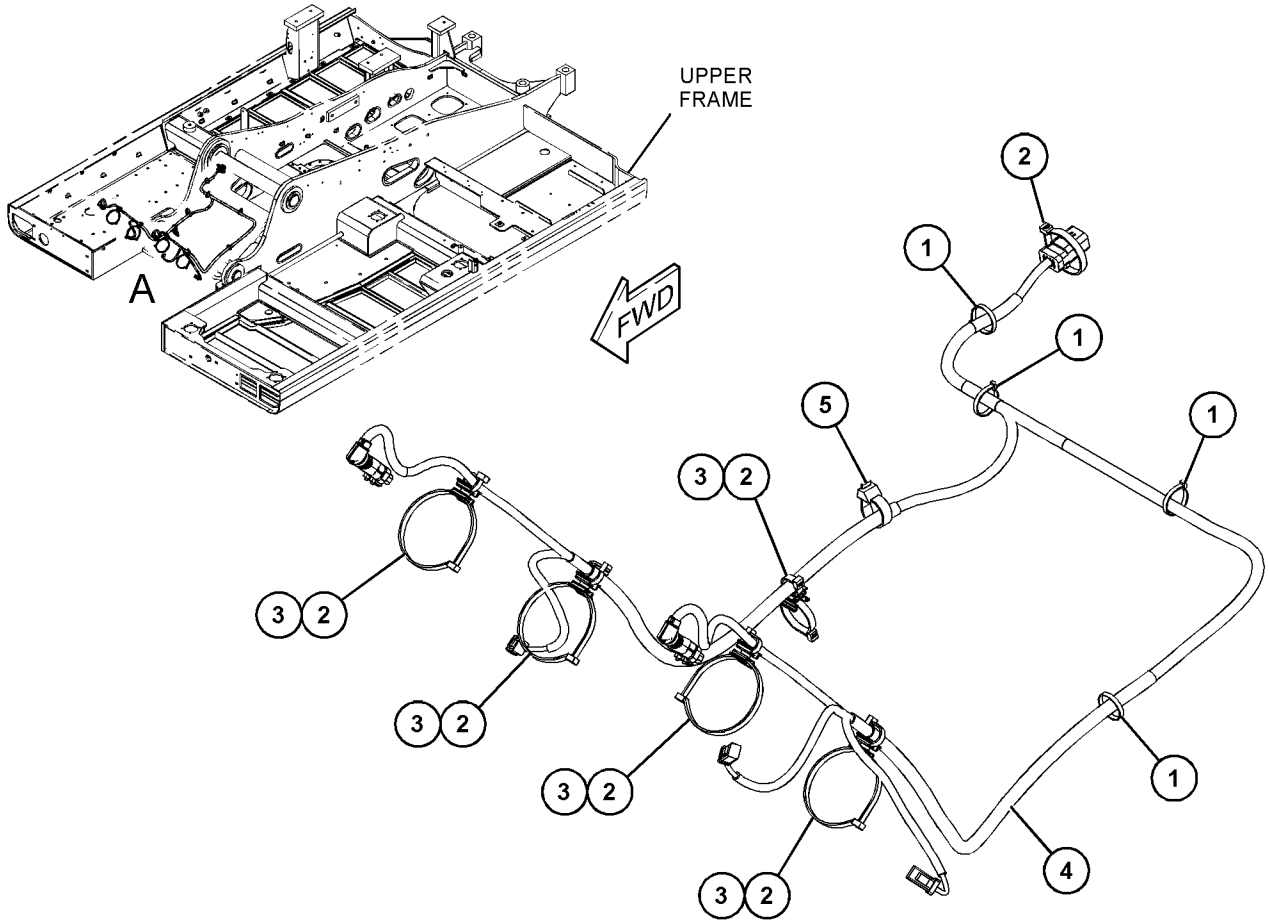

VIEW OF AREA A

GRAPHIC #1 <END> g03684785

337-5778 WIRING GP-STABILIZER—FRONT & REAR, LH & RH

S/N: CH91-UP

PART OF 426-2550, 426-2551 UNDERCARRIAGE AR

AN ATTACHMENT

SMCS-1408 **i05519671**

NOTE	REF NO	GRAPHIC REF	PART NUMBER	QTY	PART NAME 1 2 3 4 5 6 (PRODUCT LEVEL)	SEE PAGE
	1	1	**337-5779**	1	HARNESS AS-CONSOLE (STABILIZER)	
E		1	**292-2896**		CONDUIT (16.9-MM ID) (61-CM)	
		1	**102-8804**	1	KIT-RECEPTACLE (4-PIN)	
					(INCLUDES RECEPTACLE AS & WEDGE)	
		1	**8L-8413**	8	STRAP-CABLE (WHITE)	
		1	**8T-8729**	3	PIN-CONNECTOR (16-GA TO 20-GA)	
		1	**8T-8737**	1	PLUG-SEAL	
		1	**104-1995**	16	TERMINAL-BLADE (14-GA TO 18-GA)	
		1	**111-7898**	4	CONNECTOR (8-PIN)	
E		1	**125-7875**		TUBE-HEAT SHRINK (7.44-MM DIA) (15-CM)	
		1	**9X-3402**	4	SOCKET-CONNECTOR (16-GA TO 18-GA)	
		1	**230-5008**	1	PLUG AS-CONNECTOR (4-PIN)	
		1	**264-7031**	1	SEAL-CONNECTOR	
B	2	1	**7K-1181**	3	STRAP-CABLE	

B - USE AS REQUIRED
E - ORDER BY THE CENTIMETER

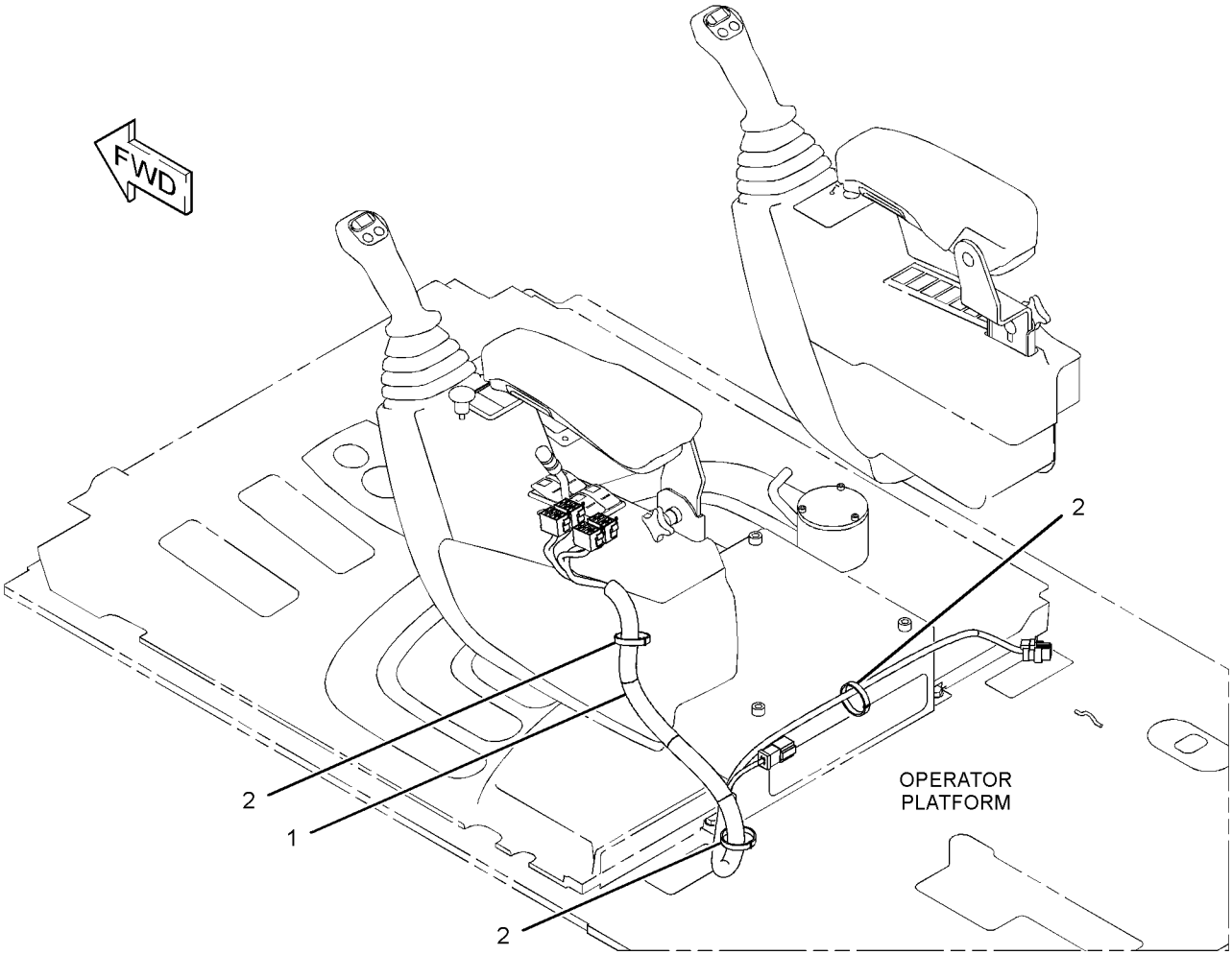

GRAPHIC #1 <END> g02424384

377-1899 WIRING GP-STABILIZER—UNDERCARRIAGE

S/N: CH91-UP

PART OF 426-2550, 426-2551 UNDERCARRIAGE AR

AN ATTACHMENT

SMCS-1408 **i05536736**

NOTE	REF NO	GRAPHIC REF	PART NUMBER	QTY	PART NAME 1 2 3 4 5 6 (PRODUCT LEVEL)	SEE PAGE
B	1	1	**3S-2093**	25	STRAP-CABLE	
	2	1	**155-2271**	1	KIT-CONNECTING PLUG (4-PIN)	
					(INCLUDES PLUG AS, WEDGE & INTERFACE SEAL)	
	3	1	**5P-4116**	1	WASHER-HARD (8.8X20.5X2-MM THK)	
	4	1	**199-6978**	1	ROD	
Y	5	1	**237-0075**	1	HARNESS AS-SENSOR (TRAVEL SPEED)	145
Y	6	1	**364-2786**	1	HARNESS AS-SOLENOID (UNDERCARRIAGE)	146
	7	1	**176-2947**	1	KIT-CONNECTING PLUG (4-PIN)	
					(INCLUDES PLUG AS, WEDGE & INTERFACE SEAL)	
M	8	1	**5C-9553**	2	BOLT (M6X1X16-MM)	
Y	9	1	**375-0595**	1	SWIVEL GP-ELECTRIC	191
	10	1	**3F-9556**	2	LOCKWASHER	
M	11	1	**5C-7261**	1	NUT (M8X1.25-THD)	
	12	1	**155-2260**	1	KIT-CONNECTING PLUG (3-PIN)	
					(INCLUDES PLUG AS, WEDGE & INTERFACE SEAL)	

B - USE AS REQUIRED
M - METRIC PART
Y - SEPARATE ILLUSTRATION

377-1899 **WIRING GP-STABILIZER (**contd.**)** **i05536736**

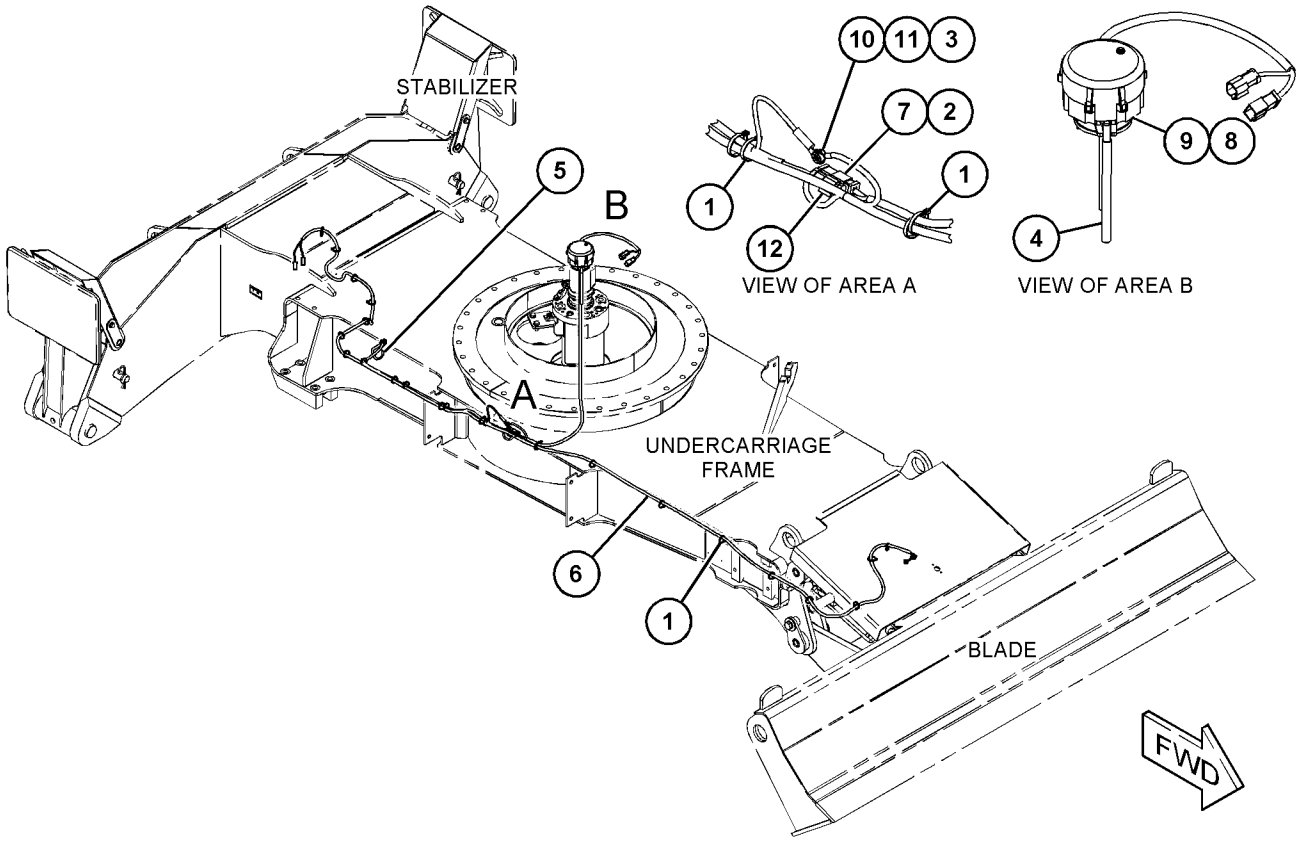

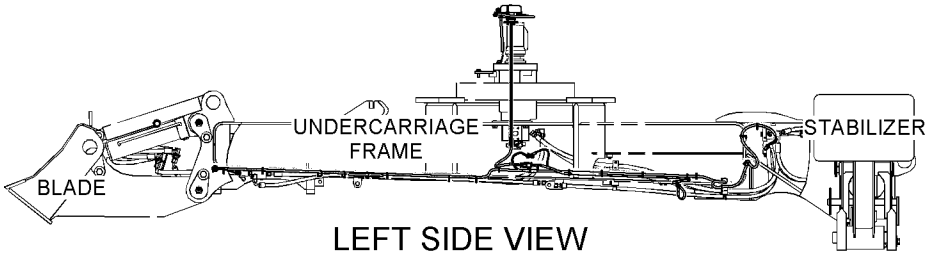

LEFT SIDE VIEW
(FOR M313D AND M315D WITH FRONT DOZER)

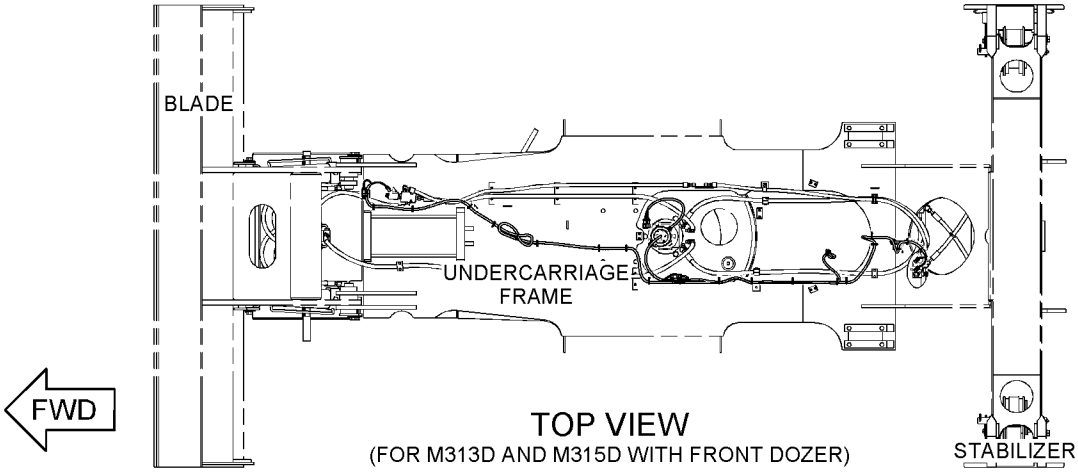

TOP VIEW
(FOR M313D AND M315D WITH FRONT DOZER)

GRAPHIC #1 g03518516

377-1899 **WIRING GP-STABILIZER (**contd.**)** **i05536736**

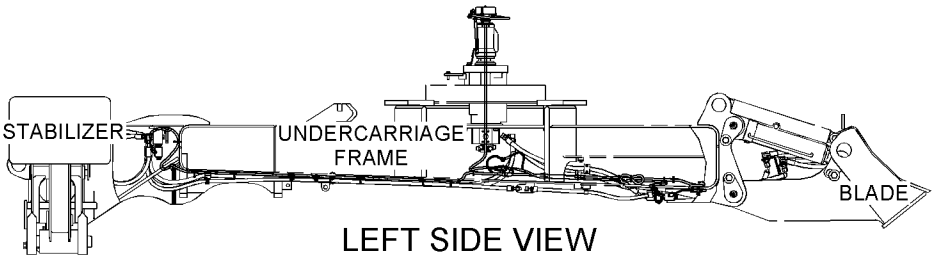

LEFT SIDE VIEW
(FOR M313D AND M315D WITH REAR DOZER)

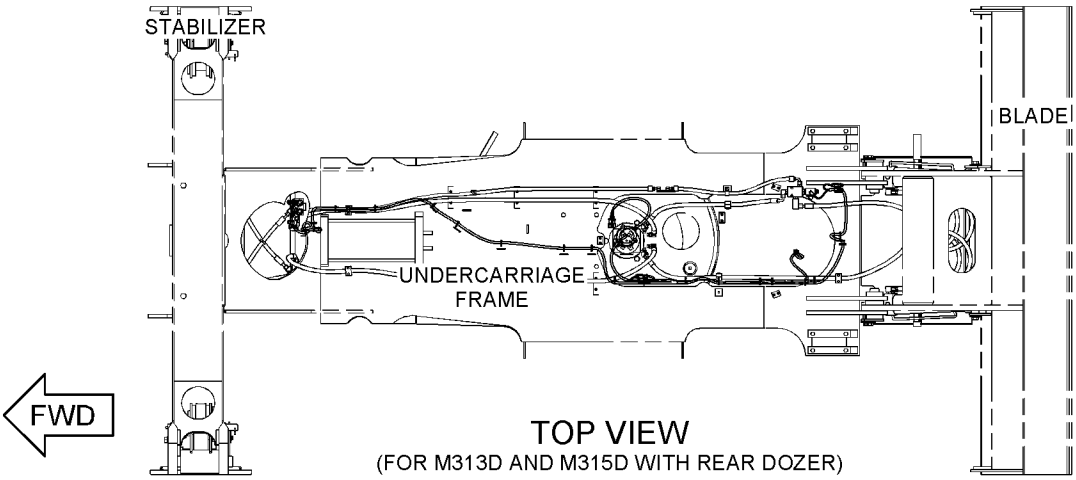

TOP VIEW
(FOR M313D AND M315D WITH REAR DOZER)

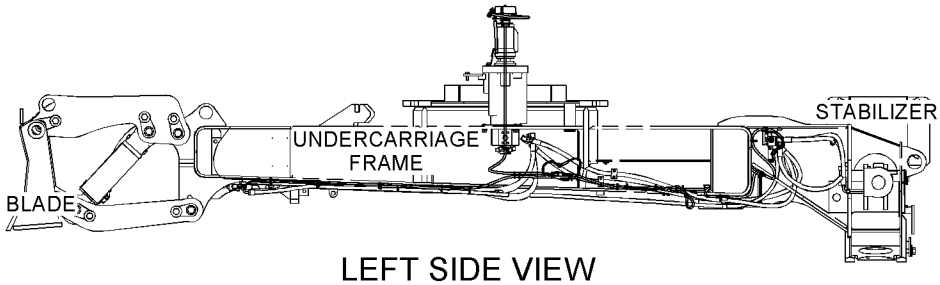

LEFT SIDE VIEW
(FOR M316D AND M318D WITH FRONT DOZER)

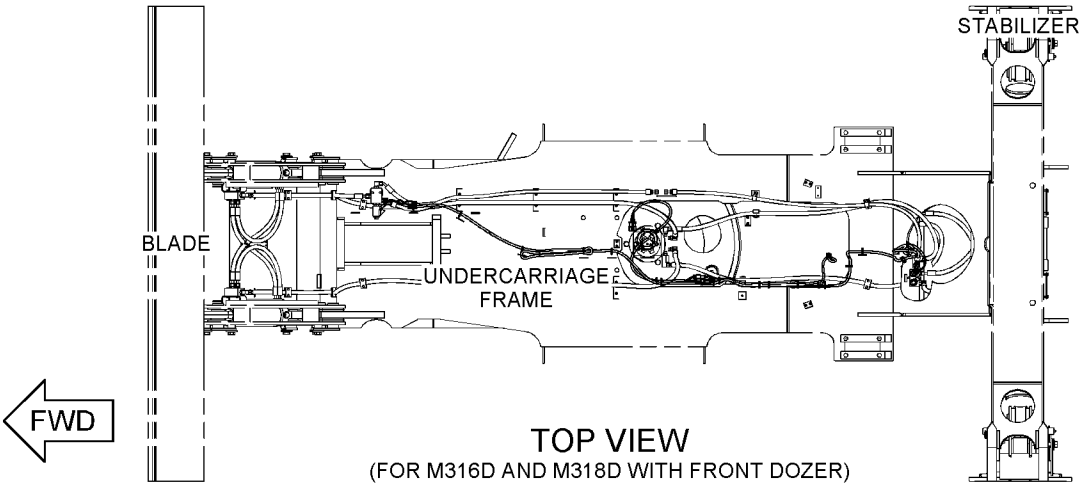

TOP VIEW
(FOR M316D AND M318D WITH FRONT DOZER)

GRAPHIC #2 g03506960

377-1899 **WIRING GP-STABILIZER (**contd.**)** **i05536736**

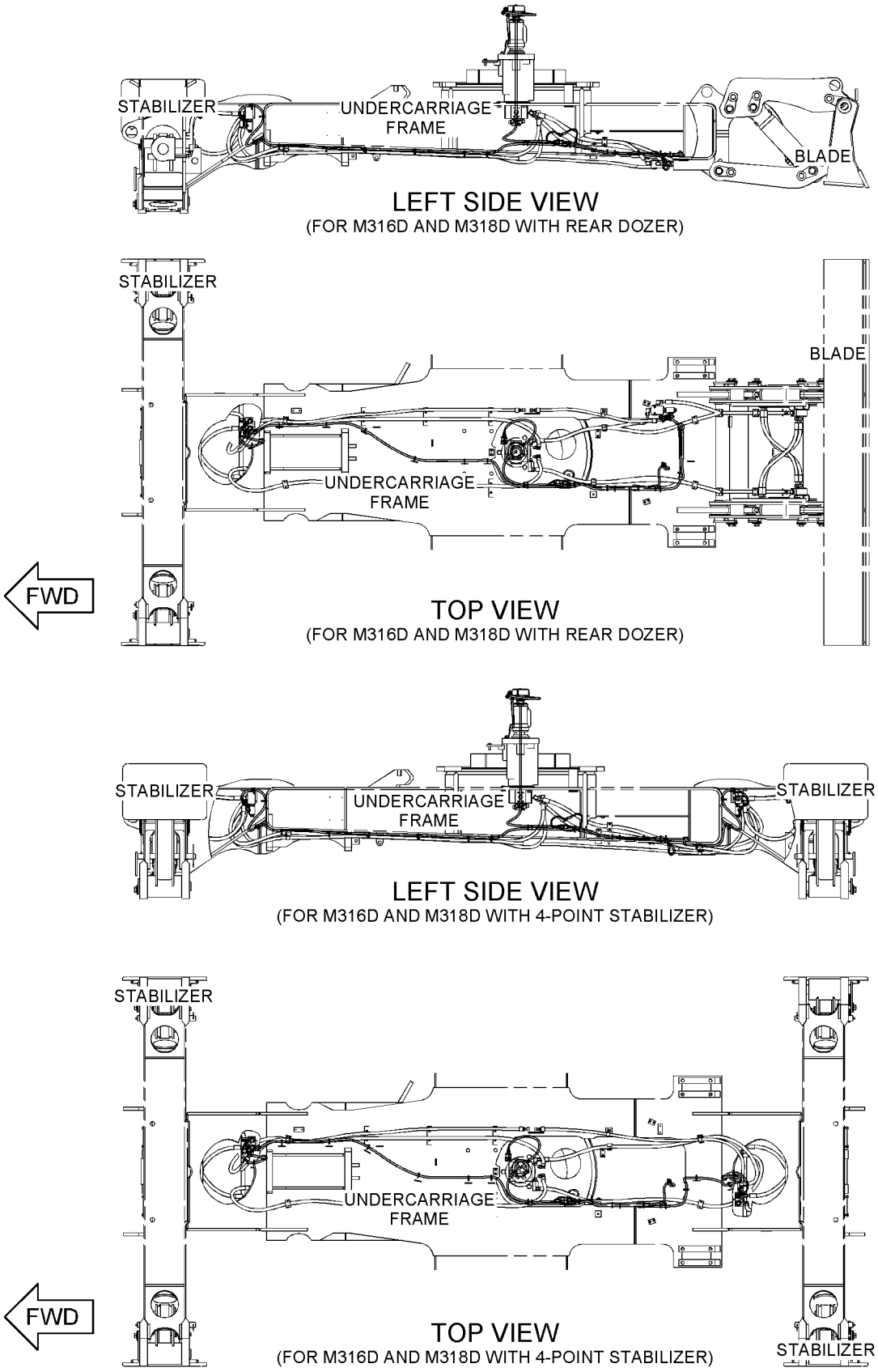

GRAPHIC #3 g03506962

377-1899 **WIRING GP-STABILIZER (**contd.**)** **i05536736**

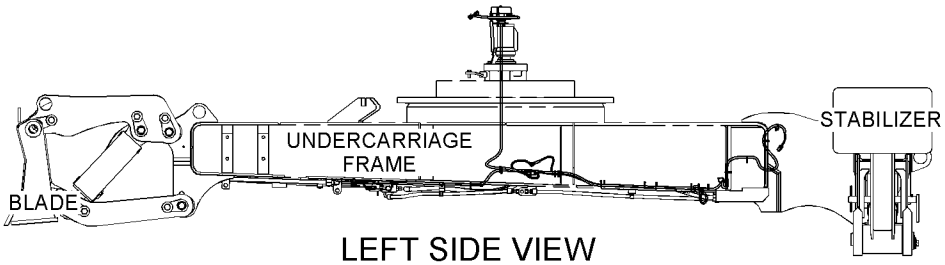

LEFT SIDE VIEW
(FOR M322D WITH FRONT DOZER)

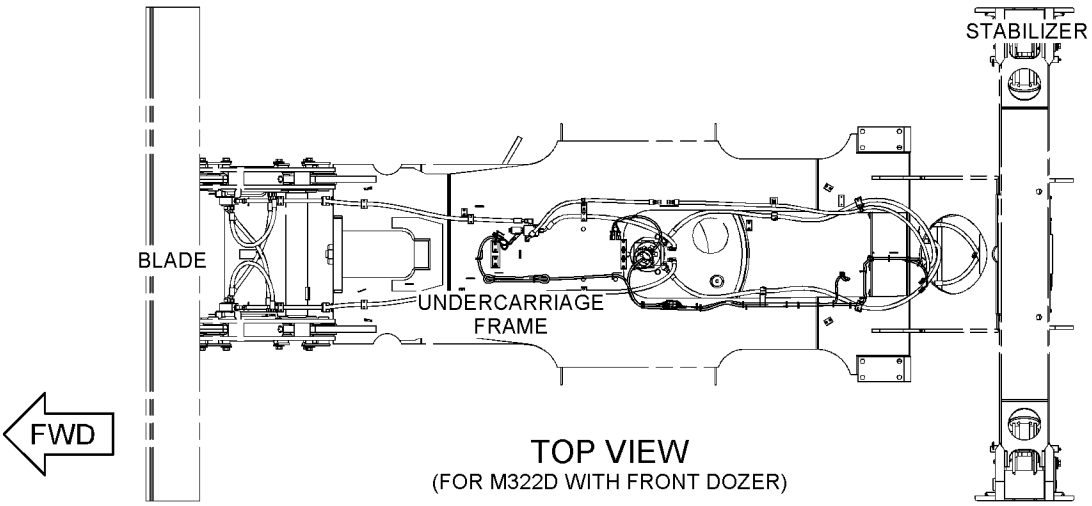

TOP VIEW
(FOR M322D WITH FRONT DOZER)

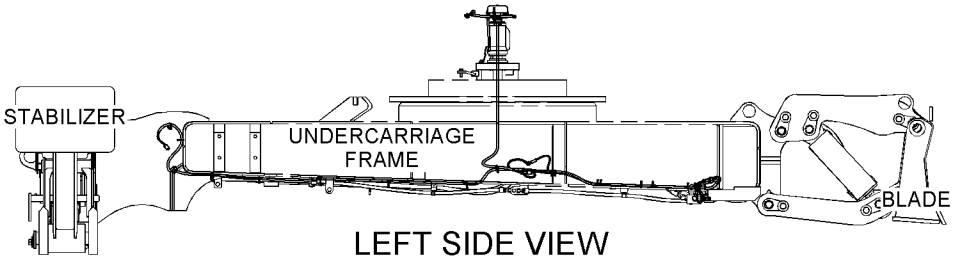

LEFT SIDE VIEW
(FOR M322D WITH REAR DOZER)

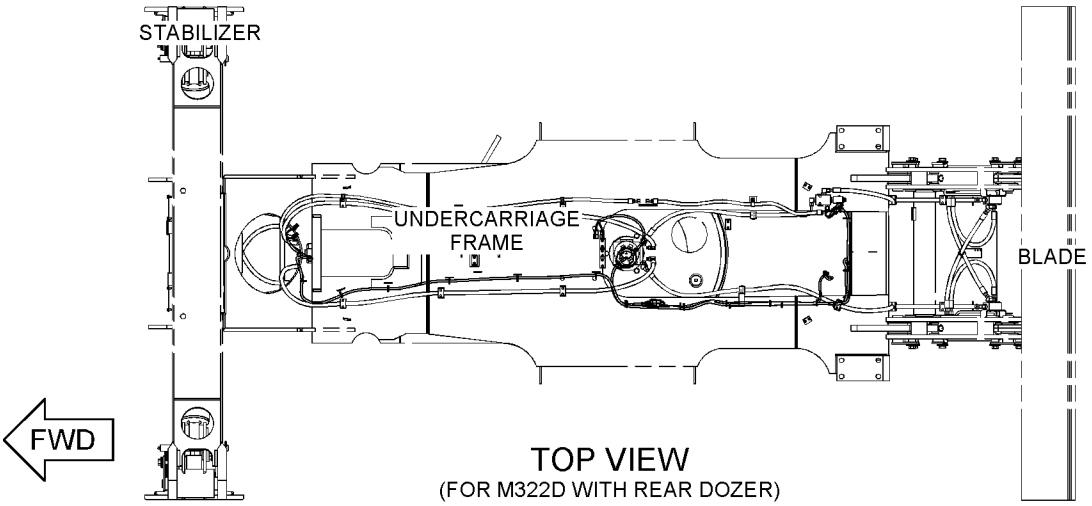

TOP VIEW
(FOR M322D WITH REAR DOZER)

GRAPHIC #4 g03506963

377-1899 **WIRING GP-STABILIZER (**contd.**)** **i05536736**

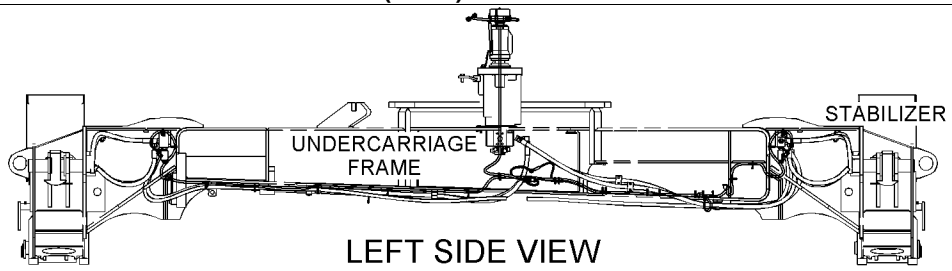

LEFT SIDE VIEW
(FOR M322D WITH 4-POINT STABILIZER)

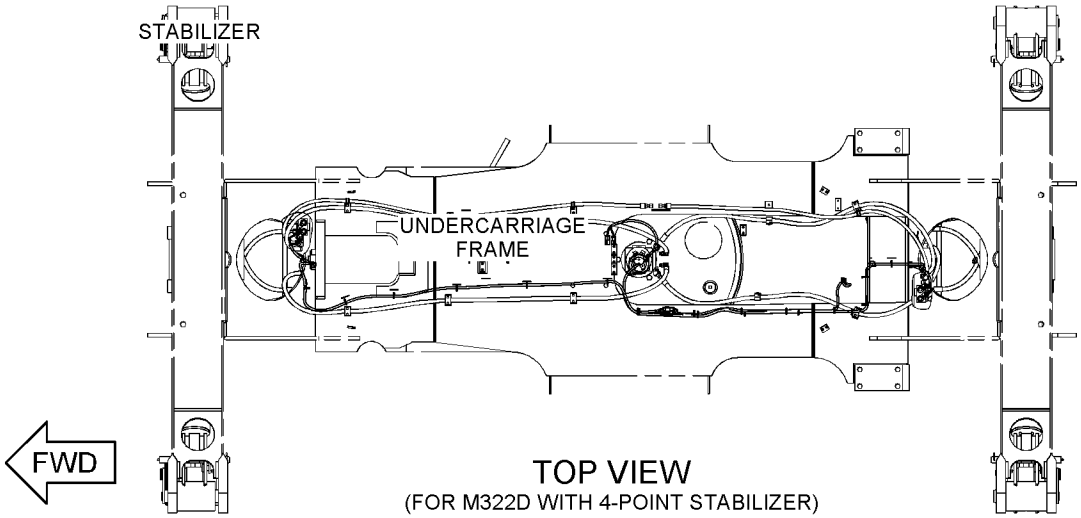

TOP VIEW
(FOR M322D WITH 4-POINT STABILIZER)

GRAPHIC #5 <END> g03506964

337-5784 WIRING GP-WORK TOOL—MULTIFUNCTION COMBINED VALVE

S/N: CH91-UP

PART OF 419-5484 VALVE & LINES AR-AUXILIARY

AN ATTACHMENT

SMCS-1408 **i05496730**

NOTE	REF NO	GRAPHIC REF	PART NUMBER	QTY	PART NAME 1 2 3 4 5 6 (PRODUCT LEVEL)	SEE PAGE
	1	1	**337-5785**	1	HARNESS AS-WORK TOOL	
		1	**230-5011**	1	RECEPTACLE AS-CONNECTOR (6-PIN)	
		1	**155-2270**	4	KIT-CONNECTING PLUG (2-PIN)	
					(EACH INCLUDES PLUG AS, WEDGE & INTERFACE SEAL)	
		1	**8T-8729**	6	PIN-CONNECTOR (16-GA TO 20-GA)	
		1	**8T-8730**	8	SOCKET-CONNECTOR (16-GA TO 18-GA)	
E		1	**125-7874**		TUBE-HEAT SHRINK (5.72-MM DIA) (5-CM)	
B	2	1	**3S-2093**	2	STRAP-CABLE	
B	3	1	**7K-1181**	2	STRAP-CABLE	

B - USE AS REQUIRED
E - ORDER BY THE CENTIMETER

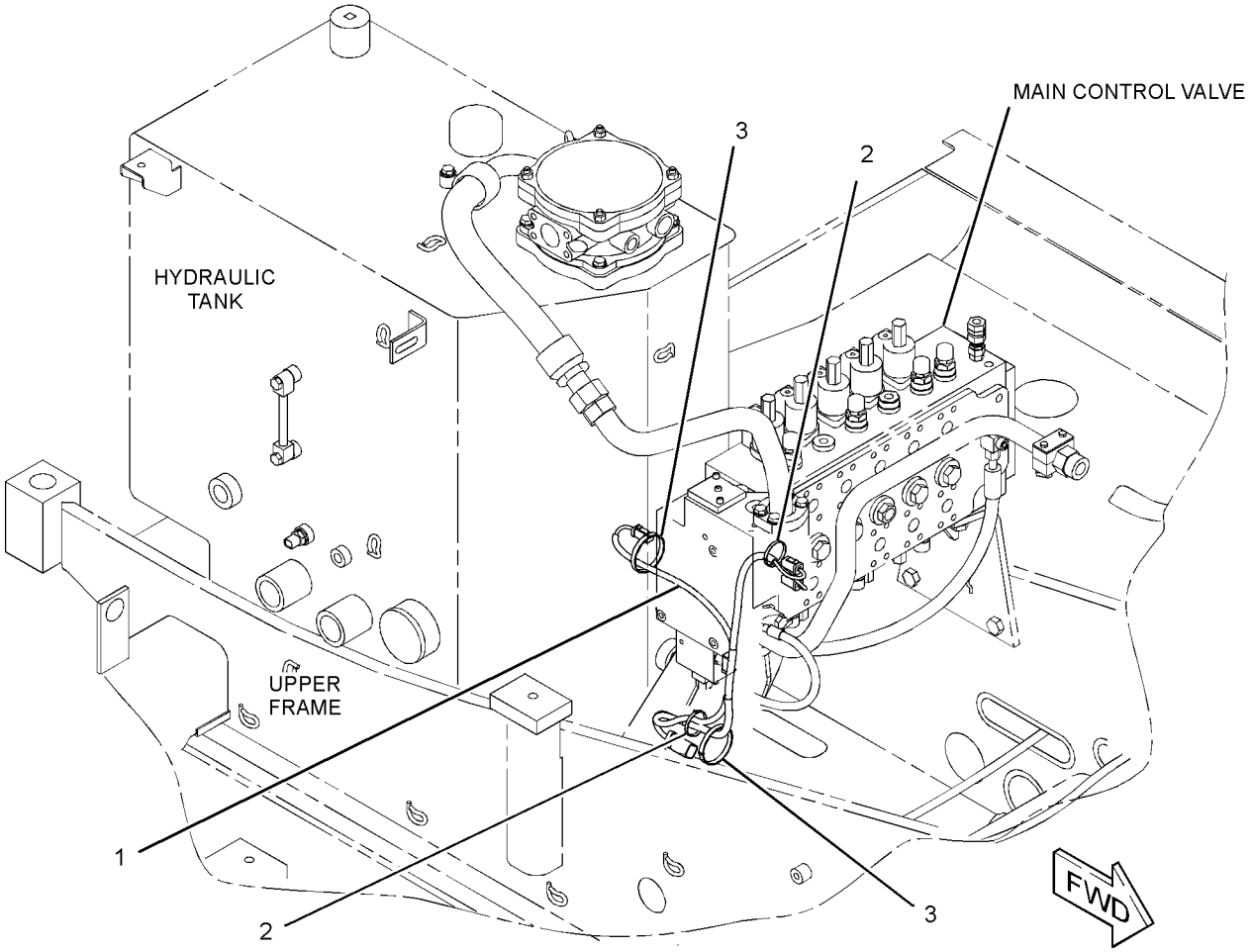

GRAPHIC #1 <END> g02428116

241-7435 AXLE & MTG AR-FRONT

S/N: CH91-UP
PART OF 453-7111 POWER TRAIN AR
ALSO AN ATTACHMENT

SMCS-3020 **i05558433**

NOTE	REF NO	GRAPHIC REF	PART NUMBER	QTY	PART NAME 1 2 3 4 5 6 (PRODUCT LEVEL)	SEE PAGE
	1	1	**5W-0965**	20	RING	
	2	1	**110-2170**	1	PIN	
	3	1	**128-7901**	2	ELBOW AS	
	4	1	**243-0919**	2	FITTING	
	5	1	**303-9446**	20	LOCKWASHER	
Y	6	1	**331-1380**	1	AXLE GP-STEERING	234
	7	1	**388-7608**	2	PLATE AS	
B	8	1	**163-7180**	1	SHIM (0.5-MM THK)	
B	9	1	**163-7181**	1	SHIM (1-MM THK)	
M	10	1	**176-5311**	1	LOCKNUT (M16X2-THD)	
M	11	1	**303-9445**	20	NUT-HEX FLANGE (M22X1.5-THD)	
	12	1	**6V-6560**	2	SEAL-O-RING	
M	13	1	**7X-2475**	1	BOLT (M16X2X130-MM)	
M	14	1	**8T-4779**	8	BOLT (M16X2X35-MM)	
	15	1	**9X-8257**	1	WASHER (17.5X30X3.5-MM THK)	

B - USE AS REQUIRED
M - METRIC PART
Y - SEPARATE ILLUSTRATION

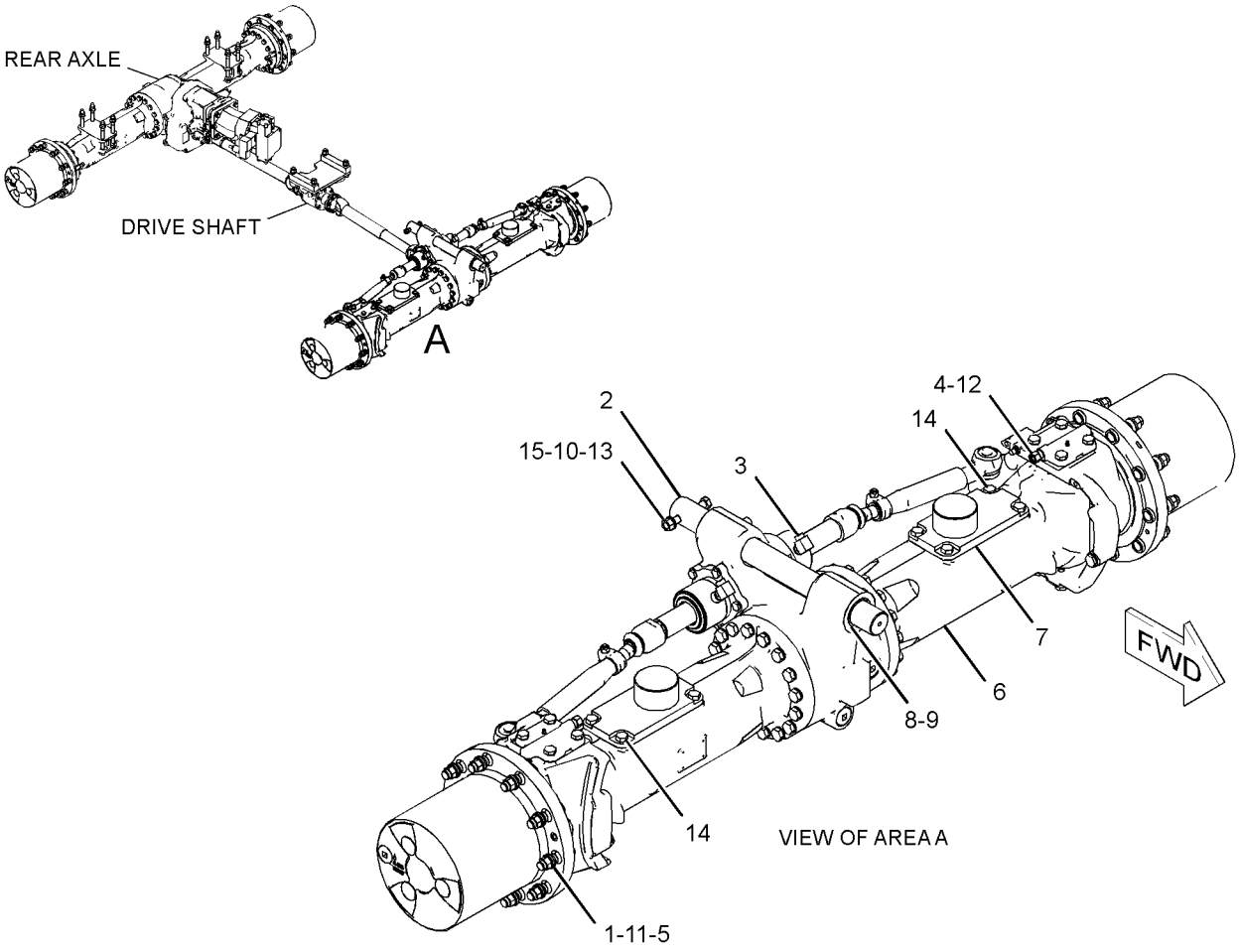

GRAPHIC #1 <END> g02989103

241-7436 AXLE & MTG AR-REAR

S/N: CH91-UP
PART OF 453-7111 POWER TRAIN AR
ALSO AN ATTACHMENT

SMCS-3278 **i05558490**

NOTE	REF NO	GRAPHIC REF	PART NUMBER	QTY	PART NAME 1 2 3 4 5 6 (PRODUCT LEVEL)	SEE PAGE
	1	1	**5W-0965**	20	RING	
	2	1	**8T-4123**	16	WASHER (22X35X3.5-MM THK)	
	3	1	**8U-5923**	2	FITTING AS	
	4	1	**303-9446**	20	LOCKWASHER	
M	5	1	**303-9445**	20	NUT-HEX FLANGE (M22X1.5-THD)	
Y	6	1	**331-1385**	1	AXLE & TRANSMISSION AR	229
	7	1	*241-6199*	1	ELBOW AS	
		1	**6V-8398**	1	SEAL-O-RING	
		1	**8T-6850**	1	SEAL-O-RING	
		1	**241-6192**	1	ELBOW	
M	8	1	**4I-6766**	8	BOLT (M20X2.5X230-MM)	
	9	1	**6V-6560**	2	SEAL-O-RING	
M	10	1	**6V-7688**	8	LOCKNUT (M20X2.5-THD)	
	11	1	**6V-8398**	3	SEAL-O-RING	
	12	1	**8T-6850**	1	SEAL-O-RING	
	13	1	**8T-7488**	1	CONNECTOR	

M - METRIC PART
Y - SEPARATE ILLUSTRATION

241-7436 **AXLE & MTG AR-REAR (**contd.**)** **i05558490**

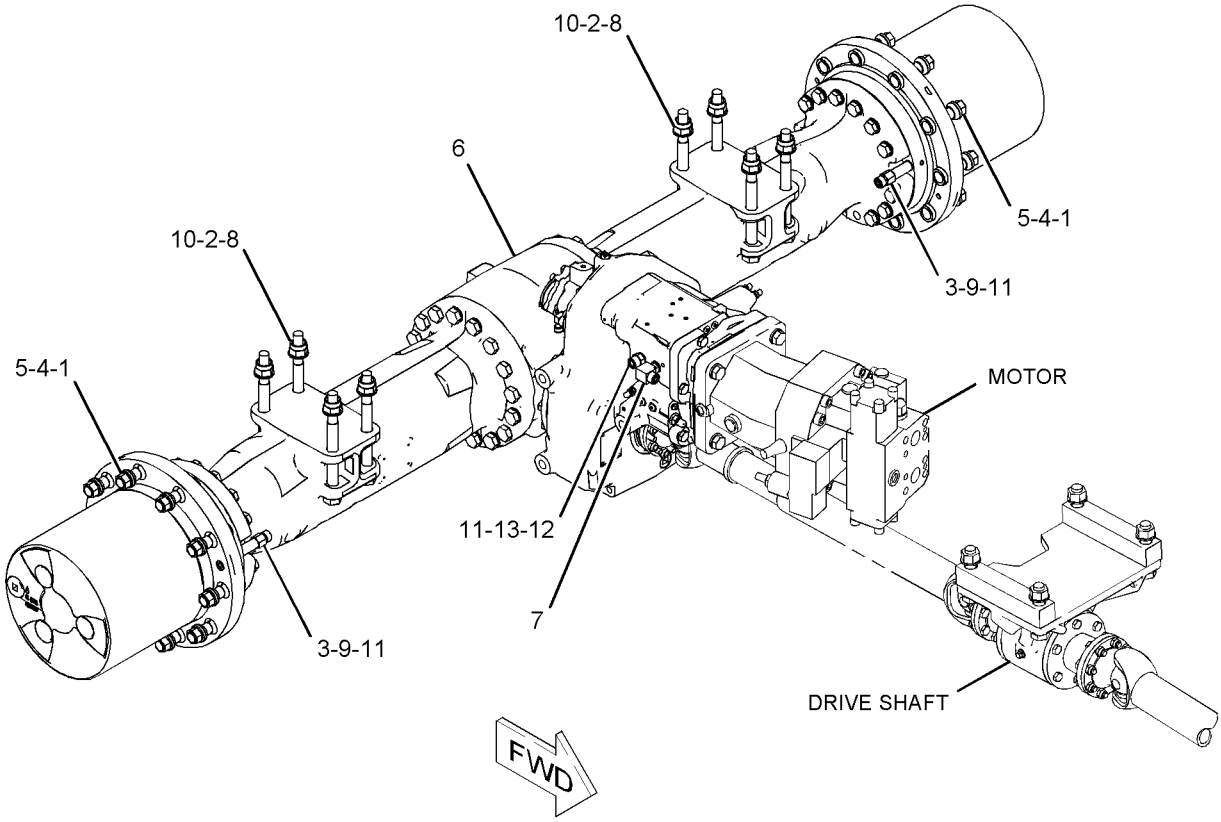

GRAPHIC #1 <END> g01109093

331-1385 AXLE & TRANSMISSION AR

S/N: CH91-UP

PART OF 241-7436 AXLE & MTG AR-REAR

ALSO AN ATTACHMENT

SMCS-3013, 3030, 3278 **i05558516**

NOTE	REF NO	GRAPHIC REF	PART NUMBER	QTY	PART NAME 1 2 3 4 5 6 (PRODUCT LEVEL)	SEE PAGE
Y	1	2	**416-1916**	1	TRANSMISSION GP (DIRECT DRIVE)	263
	2	1	**333-8041**	2	HOUSING-AXLE	
	3	1	**333-8042**	2	SHAFT-AXLE	
	4	1	**233-8738**	1	HOUSING	
B	5	1	**054-6514**	2	SHIM (0.1-MM THK)	
B		1	**121-7679**	2	SHIM (0.15-MM THK)	
B		1	**054-6513**	2	SHIM (0.2-MM THK)	
B		1	**121-7680**	2	SHIM (0.25-MM THK)	
B		1	**054-6512**	2	SHIM (0.3-MM THK)	
B		1	**121-7677**	2	SHIM (0.45-MM THK)	
B		1	**121-7678**	2	SHIM (0.55-MM THK)	
B		1	**7T-0552**	2	SHIM (2-MM THK)	
B		1	**7T-0558**	2	SHIM (1.4-MM THK)	
B		1	**7T-0560**	2	SHIM (1-MM THK)	
B		1	**7T-0561**	2	SHIM (0.8-MM THK)	
B		1	**7T-0562**	2	SHIM (0.6-MM THK)	
B		1	**7T-0563**	2	SHIM (0.5-MM THK)	
B		1	**7T-0564**	2	SHIM (0.4-MM THK)	
B		1	**128-7675**	2	SHIM (0.35-MM THK)	
B		1	**128-7676**	2	SHIM (0.65-MM THK)	
B		1	**128-7677**	2	SHIM (0.7-MM THK)	
B		1	**128-7680**	2	SHIM (0.75-MM THK)	
B		1	**128-7681**	2	SHIM (0.85-MM THK)	
B		1	**128-7683**	2	SHIM (0.9-MM THK)	
B		1	**128-7684**	2	SHIM (0.95-MM THK)	
B		1	**128-7685**	2	SHIM (1.05-MM THK)	
B		1	**128-7686**	2	SHIM (1.1-MM THK)	
B		1	**128-7687**	2	SHIM (1.15-MM THK)	
B		1	**128-7688**	2	SHIM (1.25-MM THK)	
B		1	**128-7689**	2	SHIM (1.3-MM THK)	
B		1	**128-7690**	2	SHIM (1.35-MM THK)	
B		1	**128-7691**	2	SHIM (1.45-MM THK)	
B		1	**128-7692**	2	SHIM (1.5-MM THK)	
B		1	**128-7693**	2	SHIM (1.55-MM THK)	
B		1	**128-7694**	2	SHIM (1.6-MM THK)	
B		1	**128-7695**	2	SHIM (1.65-MM THK)	
B		1	**202-8137**	2	SHIM (1.47-MM THK)	
B		1	**202-8138**	2	SHIM (1.63-MM THK)	
B		1	**202-8139**	2	SHIM (1.75-MM THK)	
B		1	**202-8140**	2	SHIM (1.7-MM THK)	
B		1	**202-8141**	2	SHIM (1.8-MM THK)	
B		1	**202-8142**	2	SHIM (1.85-MM THK)	
B		1	**202-8143**	2	SHIM (1.9-MM THK)	
B		1	**202-8144**	2	SHIM (1.95-MM THK)	
	45	1	**6Y-2942**	2	BEARING-TAPERED ROLLER	
	46	1	**6Y-2943**	2	CUP-BEARING (TAPERED ROLLER)	

331-1385 **AXLE & TRANSMISSION AR (**contd.**)** **i05558516**

NOTE	REF NO	GRAPHIC REF	PART NUMBER	QTY	PART NAME 1 2 3 4 5 6 (PRODUCT LEVEL)	SEE PAGE
	47	1	**8U-6079**	2	SEAL-O-RING	
M	48	1	**5W-5627**	32	BOLT (M18X2.5X60-MM)	
	49	1,2	**263-3629**	3	PLUG AS	
					(EACH INCLUDES)	
		1,2	**203-0215**	1	SEAL-O-RING	
	50	1	**203-0215**	1	SEAL-O-RING	
	51	1	**263-3630**	1	PLUG AS-MAGNET (AXLE HOUSING)	
M	52	1	**8T-4183**	4	BOLT (M12X1.75X40-MM)	
M	53	1	**6V-8149**	10	NUT (M12X1.75-THD)	
	54	1	**372-4119**	1	GEAR-CROWN	
	55	1	**371-7328**	1	CASE-DIFFERENTIAL	
	56	1	**331-1391**	1	COVER	
	58	1	**331-1393**	2	WASHER-THRUST	
	59	1	**416-2319**	2	GEAR-DIFFERENTIAL	
	60	1	**331-1396**	4	GEAR-DIFFERENTIAL	
	61	1	**331-1397**	4	WASHER-THRUST	
	62	1	**331-1398**	1	SHAFT	
	63	1	**331-1399**	2	SHAFT	
	64	1	**204-3975**	2	PIN-SPRING	
M	65	1	**336-7377**	16	BOLT-SOCKET HEAD (M12X1.5X35-MM)	
	66	2	**233-8739**	2	HUB GP-WHEEL	
					(EACH INCLUDES)	
	66A	2	**243-0378**	1	NUT	
	67	2	**5W-5682**	2	VALVE AS-PURGE (AXLE)	
M	68	2	**8T-4140**	28	BOLT (M16X2X60-MM)	
	69	2	**8U-5927**	2	SEAL-O-RING	
	70	2	**375-2548**	2	GEAR-SUN	
	71	2	**203-5417**	2	SEAL-LIP TYPE	
	72	2	**121-8167**	4	BEARING-ROLLER	
	73	2	**238-3298**	2	SLEEVE-SPACER	
	74	2	**333-8029**	2	HUB-FLANGE	
	75	2	**7X-5762**	2	SEAL-O-RING	
	76	2	**263-3701**	2	GEAR-CARRIER	
	77	2	**320-9728**	4	SEAL-O-RING	
	78	2	**320-9731**	2	SEAL-O-RING	
	79	2	**298-2314**	2	GEAR-INTERNAL	
	80	2	**328-8804**	2	PISTON	
	81	2	**263-4057**	8	DOWEL	
	82	2	**355-2319**	2	SEAL	
	83	2	**238-3303**	2	RING (2-MM THK)	
	84	2	**8U-0754**	2	SEAL	
	85	2	**238-3304**	2	RING (2-MM THK)	
	86	2	**8U-3592**	16	SPRING	
	87	2	**238-3305**	16	SPRING	
	88	2	**298-2315**	16	BOLT-SPECIAL	
	89	2	**8U-3591**	16	SPACER (6.5X15X7-MM THK)	
	90	2	**263-3704**	12	DISC-CLUTCH (4.5-MM THK)	
B	91	2	**238-3309**	12	DISC-CLUTCH (2.5-MM THK)	
B	92	2	**238-3307**	2	DISC-CLUTCH (2-MM THK)	
B	93	2	**238-3308**	2	DISC-CLUTCH (3-MM THK)	
	95	2	**375-1360**	2	WASHER-THRUST (10X40.2X5.1-MM THK)	

331-1385 **AXLE & TRANSMISSION AR** (contd.) **i05558516**

NOTE	REF NO	GRAPHIC REF	PART NUMBER	QTY	PART NAME 1 2 3 4 5 6 (PRODUCT LEVEL)	SEE PAGE
	96	2	**375-8264**	2	CAGE-PINION	
	97	2	**375-1359**	6	GEAR-PLANETARY	
	99	2	**110-4737**	6	RING-RETAINING	
M	100	2	**6V-3668**	4	BOLT (M12X1.75X30-MM)	
M	101	2	**243-5336**	2	BOLT (M10X1.5X20-MM)	
	102	2	**333-8037**	20	STUD-WHEEL	

B - USE AS REQUIRED
M - METRIC PART
Y - SEPARATE ILLUSTRATION

331-1385 **AXLE & TRANSMISSION AR (**contd.**)** **i05558516**

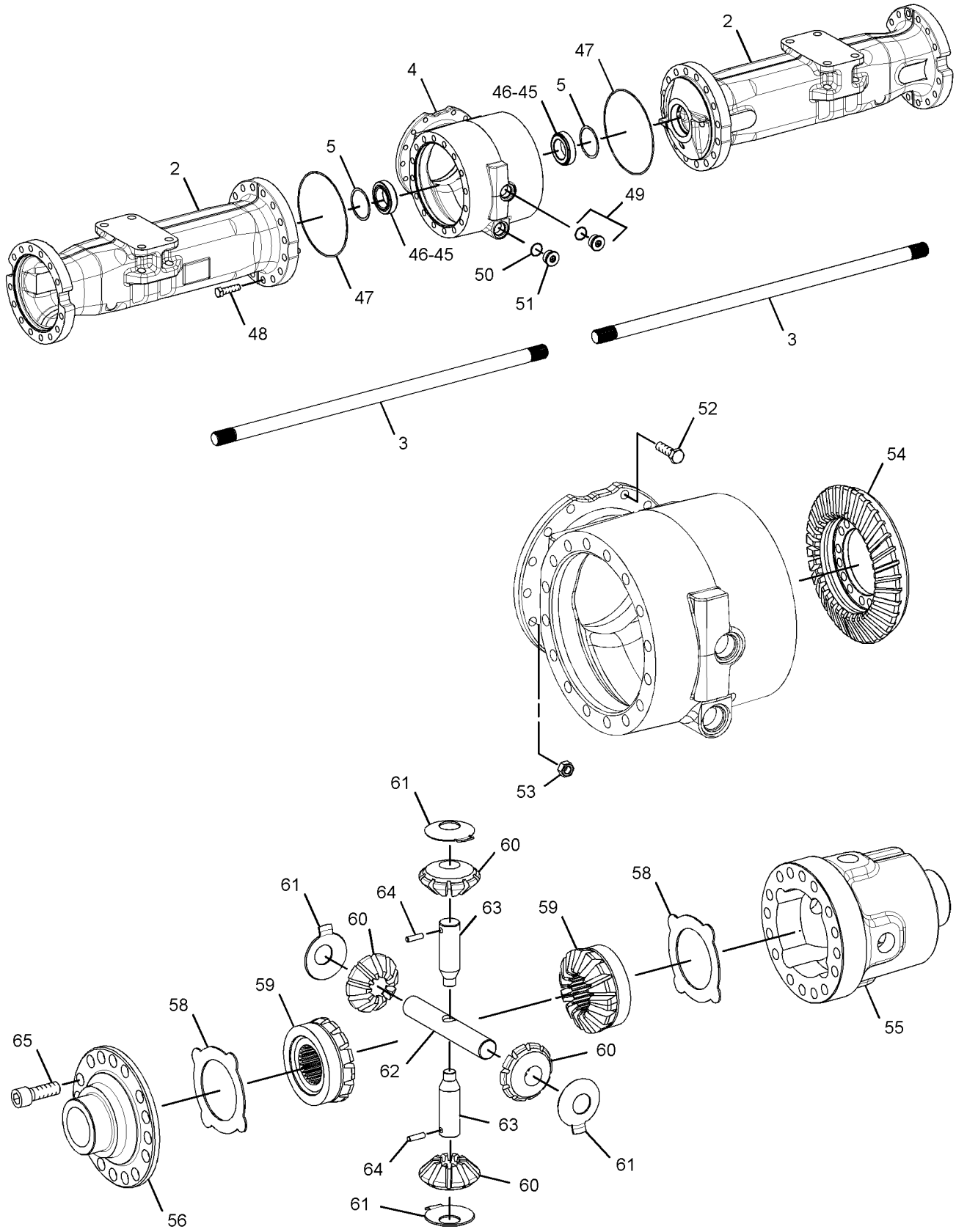

GRAPHIC #1 g03232516

331-1385 **AXLE & TRANSMISSION AR (**contd.**)** **i05558516**

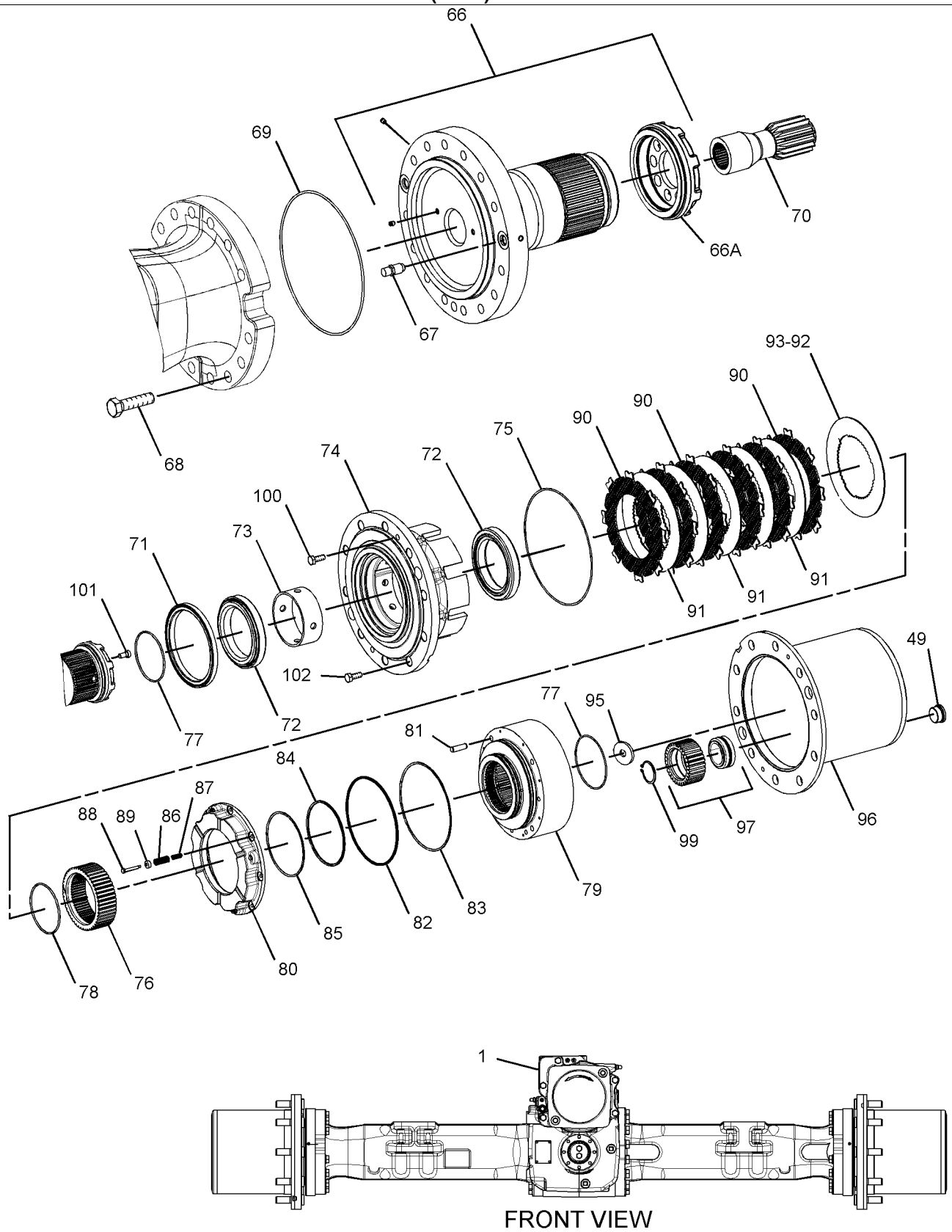

GRAPHIC #2 <END> g03237600

331-1380 AXLE GP-STEERING

S/N: CH91-UP
PART OF 241-7435 AXLE & MTG AR-FRONT
ALSO AN ATTACHMENT

SMCS-3020, 3282, 4313, 4321 **i05558450**

NOTE	REF NO	GRAPHIC REF	PART NUMBER	QTY	PART NAME 1 2 3 4 5 6 (PRODUCT LEVEL)	SEE PAGE
	1	3	**372-4119**	1	GEAR-CROWN	
	2	3	**372-4122**	1	PINION	
B	3	3	**110-0124**	1	SHIM (2-MM THK)	
B		3	**110-0122**	1	SHIM (1.8-MM THK)	
B		3	**110-0121**	1	SHIM (1.5-MM THK)	
B		3	**110-0120**	1	SHIM (1.2-MM THK)	
B		3	**129-9912**	1	SHIM (1.9-MM THK)	
B		3	**129-9913**	1	SHIM (1.7-MM THK)	
B		3	**129-9914**	1	SHIM (1.6-MM THK)	
B		3	**129-9915**	1	SHIM (1.4-MM THK)	
B		3	**129-9916**	1	SHIM (1.3-MM THK)	
B		3	**190-8567**	1	SHIM (1-MM THK)	
B		3	**190-8566**	1	SHIM (0.9-MM THK)	
B		3	**190-8565**	1	SHIM (0.8-MM THK)	
B		3	**190-8563**	1	SHIM (0.7-MM THK)	
B		3	**190-8561**	1	SHIM (0.6-MM THK)	
B		3	**5W-2074**	1	SHIM (0.5-MM THK)	
B		3	**5W-2073**	1	SHIM (0.3-MM THK)	
B		3	**5W-3644**	1	SHIM (0.2-MM THK)	
B		3	**5W-2072**	1	SHIM (0.1-MM THK)	
B		3	**193-1123**	1	SHIM (0.75-MM THK)	
B		3	**193-1124**	1	SHIM (0.65-MM THK)	
B		3	**331-1378**	1	SHIM (1.25-MM THK)	
B		3	**331-1379**	1	SHIM (1.35-MM THK)	
B		3	**331-1381**	1	SHIM (1.45-MM THK)	
B		3	**331-1382**	1	SHIM (1.55-MM THK)	
B		3	**331-1383**	1	SHIM (1.65-MM THK)	
B		3	**331-1384**	1	SHIM (1.75-MM THK)	
B		3	**331-1386**	1	SHIM (1.85-MM THK)	
	30	3	**333-8048**	1	BEARING-TAPERED ROLLER	
B	31	3	**110-0158**	1	RING (16-MM THK)	
B		3	**110-0157**	1	RING (16.1-MM THK)	
B		3	**110-0156**	1	RING (16.2-MM THK)	
B		3	**110-0155**	1	RING (16.3-MM THK)	
B		3	**110-0154**	1	RING (16.4-MM THK)	
B		3	**110-0153**	1	RING (16.5-MM THK)	
B		3	**110-0152**	1	RING (16.6-MM THK)	
B		3	**110-0151**	1	RING (16.7-MM THK)	
B		3	**110-0150**	1	RING (16.8-MM THK)	
B		3	**110-0146**	1	RING (16.92-MM THK)	
B		3	**110-0140**	1	RING (17.1-MM THK)	
B		3	**110-0139**	1	RING (17.2-MM THK)	
B		3	**110-0138**	1	RING (17.3-MM THK)	
B		3	**110-0137**	1	RING (17.4-MM THK)	
B		3	**110-0148**	1	RING (16.86-MM THK)	
B		3	**110-0144**	1	RING (16.98-MM THK)	

331-1380 **AXLE GP-STEERING** (contd.) **i05558450**

NOTE	REF NO	GRAPHIC REF	PART NUMBER	QTY	PART NAME 1 2 3 4 5 6 (PRODUCT LEVEL)	SEE PAGE
B		3	**110-0142**	1	RING (17.04-MM THK)	
B		3	**202-9635**	1	RING (16.56-MM THK)	
B		3	**202-9636**	1	RING (16.62-MM THK)	
B		3	**202-9637**	1	RING (16.64-MM THK)	
B		3	**202-9643**	1	RING (16.68-MM THK)	
B		3	**202-9644**	1	RING (16.72-MM THK)	
B		3	**202-9669**	1	RING (16.74-MM THK)	
B		3	**202-9670**	1	RING (16.76-MM THK)	
B		3	**202-9671**	1	RING (16.78-MM THK)	
B		3	**202-9673**	1	RING (16.84-MM THK)	
B		3	**202-9679**	1	RING (16.88-MM THK)	
B		3	**202-9680**	1	RING (16.9-MM THK)	
B		3	**202-9681**	1	RING (16.94-MM THK)	
B		3	**193-1454**	1	RING (16.66-MM THK)	
B		3	**193-1455**	1	RING (16.96-MM THK)	
B		3	**193-1458**	1	RING (17-MM THK)	
B		3	**193-1460**	1	RING (17.02-MM THK)	
B		3	**193-1461**	1	RING (17.06-MM THK)	
B		3	**193-1462**	1	RING (17.08-MM THK)	
B		3	**193-1463**	1	RING (17.12-MM THK)	
B		3	**193-1464**	1	RING (17.14-MM THK)	
B		3	**193-1465**	1	RING (17.16-MM THK)	
B		3	**193-1466**	1	RING (17.18-MM THK)	
B		3	**193-1467**	1	RING (17.22-MM THK)	
B		3	**193-1469**	1	RING (17.24-MM THK)	
B		3	**193-1470**	1	RING (17.26-MM THK)	
B		3	**193-1471**	1	RING (17.28-MM THK)	
	75	3	**269-2407**	1	BEARING-ROLLER	
	76	3	**418-8616**	1	SEAL-LIP TYPE	
	77	3	**8U-2506**	1	WASHER (30.5X55.5X6-MM THK)	
M	78	3	**110-0848**	1	NUT (M30X1.5-THD)	
	79	3	**417-6660**	1	FLANGE-DRIVE	
	80	3	**331-1388**	1	PLATE-DEFLECTOR	
	81	3	**371-7328**	1	CASE-DIFFERENTIAL	
	82	3	**331-1391**	1	COVER	
	84	3	**331-1393**	2	WASHER-THRUST	
C	85	3	**416-2319**	2	GEAR-DIFFERENTIAL	
	86	3	**331-1396**	4	GEAR-DIFFERENTIAL	
	87	3	**331-1397**	4	WASHER-THRUST	
	88	3	**331-1398**	1	SHAFT	
	89	3	**331-1399**	2	SHAFT	
	90	3	**204-3975**	2	PIN-SPRING	
M	91	3	**336-7377**	16	BOLT-SOCKET HEAD (M12X1.5X35-MM)	
B	92	1	**054-6514**	2	SHIM (0.1-MM THK)	
B		1	**121-7679**	2	SHIM (0.15-MM THK)	
B		1	**054-6513**	2	SHIM (0.2-MM THK)	
B		1	**121-7680**	2	SHIM (0.25-MM THK)	
B		1	**054-6512**	2	SHIM (0.3-MM THK)	
B		1	**7T-0564**	2	SHIM (0.4-MM THK)	
B		1	**121-7677**	2	SHIM (0.45-MM THK)	
B		1	**7T-0563**	2	SHIM (0.5-MM THK)	

331-1380 **AXLE GP-STEERING** (contd.) **i05558450**

NOTE	REF NO	GRAPHIC REF	PART NUMBER	QTY	PART NAME 1 2 3 4 5 6 (PRODUCT LEVEL)	SEE PAGE
B		1	**121-7678**	2	SHIM (0.55-MM THK)	
B		1	**7T-0562**	2	SHIM (0.6-MM THK)	
B		1	**128-7676**	2	SHIM (0.65-MM THK)	
B		1	**128-7677**	2	SHIM (0.7-MM THK)	
B		1	**128-7680**	2	SHIM (0.75-MM THK)	
B		1	**7T-0561**	2	SHIM (0.8-MM THK)	
B		1	**128-7681**	2	SHIM (0.85-MM THK)	
B		1	**128-7683**	2	SHIM (0.9-MM THK)	
B		1	**128-7684**	2	SHIM (0.95-MM THK)	
B		1	**7T-0560**	2	SHIM (1-MM THK)	
B		1	**128-7685**	2	SHIM (1.05-MM THK)	
B		1	**128-7686**	2	SHIM (1.1-MM THK)	
B		1	**128-7687**	2	SHIM (1.15-MM THK)	
B		1	**128-7688**	2	SHIM (1.25-MM THK)	
B		1	**128-7689**	2	SHIM (1.3-MM THK)	
B		1	**128-7690**	2	SHIM (1.35-MM THK)	
B		1	**7T-0558**	2	SHIM (1.4-MM THK)	
B		1	**128-7691**	2	SHIM (1.45-MM THK)	
B		1	**128-7692**	2	SHIM (1.5-MM THK)	
B		1	**128-7693**	2	SHIM (1.55-MM THK)	
B		1	**128-7694**	2	SHIM (1.6-MM THK)	
B		1	**128-7695**	2	SHIM (1.65-MM THK)	
B		1	**7T-0552**	2	SHIM (2-MM THK)	
B		1	**202-8137**	2	SHIM (1.47-MM THK)	
B		1	**202-8138**	2	SHIM (1.63-MM THK)	
B		1	**202-8139**	2	SHIM (1.75-MM THK)	
B		1	**202-8140**	2	SHIM (1.7-MM THK)	
B		1	**202-8142**	2	SHIM (1.85-MM THK)	
B		1	**202-8143**	2	SHIM (1.9-MM THK)	
B		1	**202-8144**	2	SHIM (1.95-MM THK)	
	132	1	**6Y-2942**	2	BEARING-TAPERED ROLLER	
	133	1	**6Y-2943**	2	CUP-BEARING (TAPERED ROLLER)	
	134	1	**8U-6079**	2	SEAL-O-RING	
M	135	1	**5W-5627**	32	BOLT (M18X2.5X60-MM)	
	136	1,2	**263-3629**	3	PLUG AS	
					(EACH INCLUDES)	
		1,2	**203-0215**	1	SEAL-O-RING	
	137	1	**263-3630**	1	PLUG AS-MAGNET (AXLE HOUSING)	
	138	1	**203-0215**	1	SEAL-O-RING	
	139	1	**333-8001**	2	HOUSING-AXLE	
	140	1	**331-1409**	1	HOUSING	
	141	1	**220-2593**	4	BUSHING-SLEEVE	
	142	1	**333-8005**	4	SEAL-RING	
	143	1	**388-2516**	2	BUSHING	
	144	1	**333-8009**	2	UNIVERSAL JOINT GP	
					(EACH INCLUDES)	
		1	**243-0905**	1	FORK	
		1	**243-0906**	2	SPIDER AS	
					(EACH INCLUDES)	
		1	**8T-9597**	4	RING-RETAINING	
	146	1	**243-0909**	1	TIE ROD GP (LH)	

331-1380 **AXLE GP-STEERING (**contd.**)** **i05558450**

NOTE	REF NO	GRAPHIC REF	PART NUMBER	QTY	PART NAME 1 2 3 4 5 6 (PRODUCT LEVEL)	SEE PAGE
		1	**243-0910**	1	BALL JOINT AS	
M		1	**295-6358**	1	NUT (M28X1.5-THD)	
		1	**295-6535**	1	JOINT AS (LH)	
	147	1	**243-0911**	1	TIE ROD GP (RH)	
		1	**243-0910**	1	BALL JOINT AS	
M		1	**295-6358**	1	NUT (M28X1.5-THD)	
		1	**295-6536**	1	JOINT AS (RH)	
M	148	1	**164-5912**	2	LOCKNUT (M27X1.5-THD)	
	149	1	**333-8016**	1	HOUSING GP-AXLE (LH)	
	149A	1	**243-0378**	1	NUT	
	150	1	**333-8017**	1	HOUSING GP-AXLE (RH)	
	150A	1	**243-0378**	1	NUT	
	151	1	**4D-8648**	4	CUP-BEARING	
	152	1	**110-0858**	4	CAP-SEALING	
	153	1	**110-4743**	4	SEAL-O-RING	
	154	1	**333-8023**	2	TRUNNION	
	155	1	**333-8024**	2	TRUNNION	
	156	1	**135-3437**	2	SEAL-O-RING	
M	157	1	**296-4057**	16	BOLT (M18X2.5X35-MM)	
	158	1	**5W-2998**	4	FITTING-GREASE	
	160	1	**243-0917**	2	WASHER-THRUST	
	161	1	**243-0918**	2	WASHER-THRUST	
	162	1	**110-0846**	2	RING-RETAINING	
	163	1	**5W-5682**	2	VALVE AS-PURGE (AXLE)	
B	164	1	**8U-2354**	2	SHIM (6-MM THK)	
B		1	**5W-6405**	2	SHIM (6.5-MM THK)	
B		1	**5W-7644**	2	SHIM (4-MM THK)	
B		1	**5W-7642**	2	SHIM (5-MM THK)	
B		1	**5W-7641**	2	SHIM (5.5-MM THK)	
B		1	**5W-7643**	1	SHIM (4.5-MM THK)	
B		1	**128-1733**	2	SHIM (2-MM THK)	
B		1	**128-1734**	2	SHIM (3-MM THK)	
B		1	**5W-6408**	2	WASHER (18.5X35X8-MM THK)	
B		1	**202-8145**	2	WASHER (18.5X35X9-MM THK)	
B		1	**202-8149**	2	WASHER (18.5X35X14-MM THK)	
M	175	1	**5W-2173**	4	BOLT (M18X2.5X40-MM)	
M	176	1	**241-8122**	2	NUT (M18X2.5-THD)	
Y	177	2	**375-1285**	1	CYLINDER GP-STEERING	372
M	178	2	**6V-3823**	5	BOLT (M12X1.75X60-MM)	
	179	2	**203-5417**	2	SEAL-LIP TYPE	
	180	2	**121-8167**	4	BEARING-ROLLER	
	181	2	**238-3298**	2	SLEEVE-SPACER	
	182	2	**333-8029**	2	HUB-FLANGE	
	183	2	**7X-5762**	2	SEAL-O-RING	
	184	2	**263-3701**	2	GEAR-CARRIER	
	185	2	**320-9728**	4	SEAL-O-RING	
	186	2	**320-9731**	2	SEAL-O-RING	
	187	2	**298-2314**	2	GEAR-INTERNAL	
	188	2	**328-8804**	2	PISTON	
	189	2	**263-4057**	8	DOWEL	
	190	2	**355-2319**	2	SEAL	

331-1380 **AXLE GP-STEERING** (contd.) **i05558450**

NOTE	REF NO	GRAPHIC REF	PART NUMBER	QTY	PART NAME 1 2 3 4 5 6 (PRODUCT LEVEL)	SEE PAGE
	191	2	**238-3303**	2	RING (2-MM THK)	
	192	2	**8U-0754**	2	SEAL	
	193	2	**238-3304**	2	RING (2-MM THK)	
	194	2	**8U-3592**	16	SPRING	
	195	2	**238-3305**	16	SPRING	
	196	2	**298-2315**	16	BOLT-SPECIAL	
	197	2	**8U-3591**	16	SPACER (6.5X15X7-MM THK)	
	198	2	**263-3704**	12	DISC-CLUTCH (4.5-MM THK)	
	199	2	**238-3309**	10	DISC-CLUTCH (2.5-MM THK)	
B	200	2	**238-3307**	2	DISC-CLUTCH (2-MM THK)	
B		2	**238-3308**	2	DISC-CLUTCH (3-MM THK)	
B		2	**238-3309**	2	DISC-CLUTCH (2.5-MM THK)	
	203	2	**375-1360**	2	WASHER-THRUST (10X40.2X5.1-MM THK)	
	204	2	**375-8264**	2	CAGE-PINION	
	205	2	**375-1359**	6	GEAR-PLANETARY	
	207	2	**110-4737**	6	RING-RETAINING	
M	208	2	**6V-3668**	4	BOLT (M12X1.75X30-MM)	
M	209	2	**243-5336**	2	BOLT (M10X1.5X20-MM)	
	210	2	**333-8037**	20	STUD-WHEEL	
	211	1	**6V-2652**	4	CONE-BEARING	

PARTS SHOWN IN GRAPHIC(S) WITHOUT A REFERENCE NUMBER ARE NOT SERVICED SEPARATELY

B - USE AS REQUIRED
C - CHANGE FROM PREVIOUS TYPE
M - METRIC PART
Y - SEPARATE ILLUSTRATION

331-1380 **AXLE GP-STEERING (**contd.**)** **i05558450**

REFER TO ALL ILLUSTRATIONS OF
THIS GROUP FOR AUXILIARY VIEWS

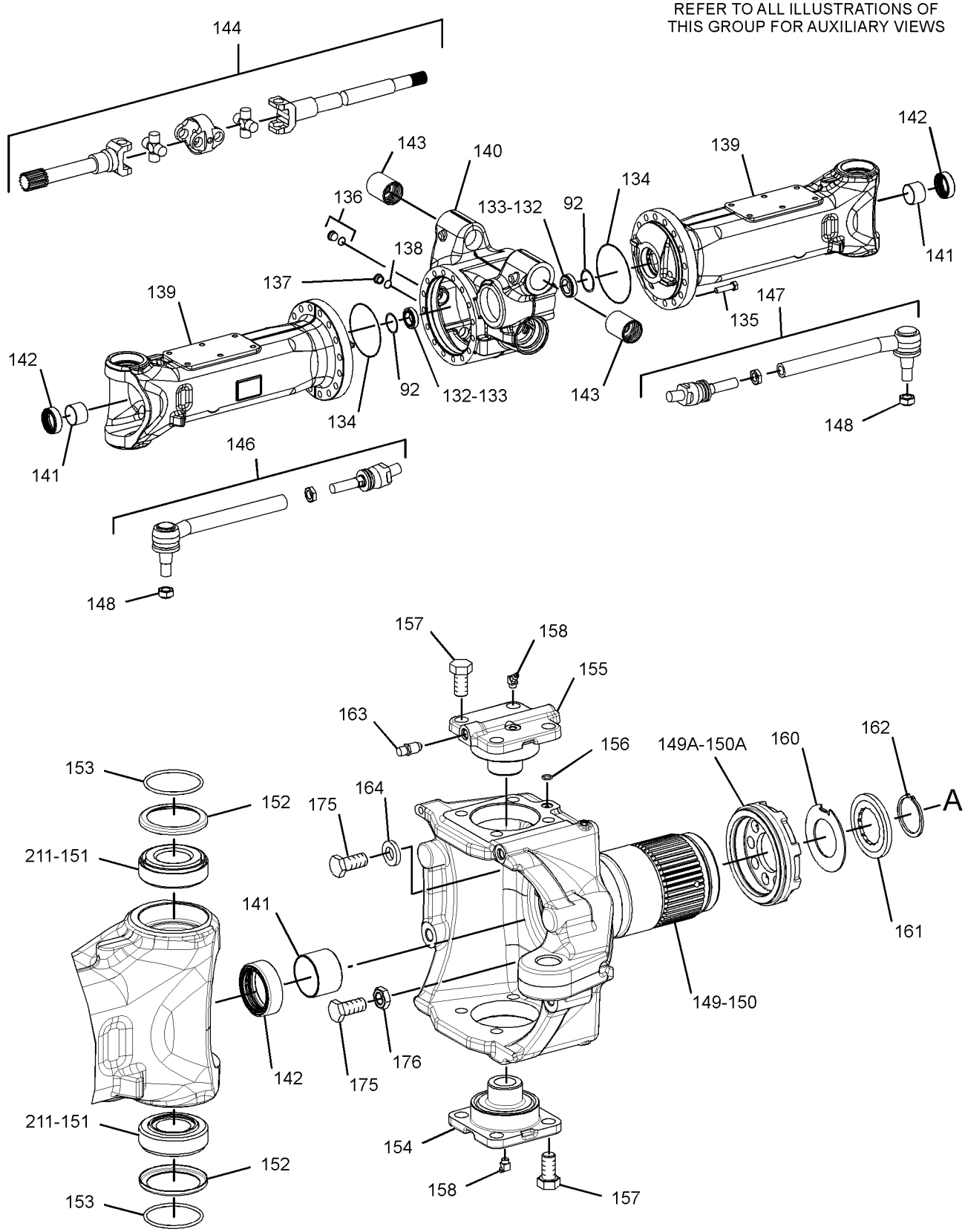

GRAPHIC #1 g03063898

331-1380 **AXLE GP-STEERING** (contd.) **i05558450**

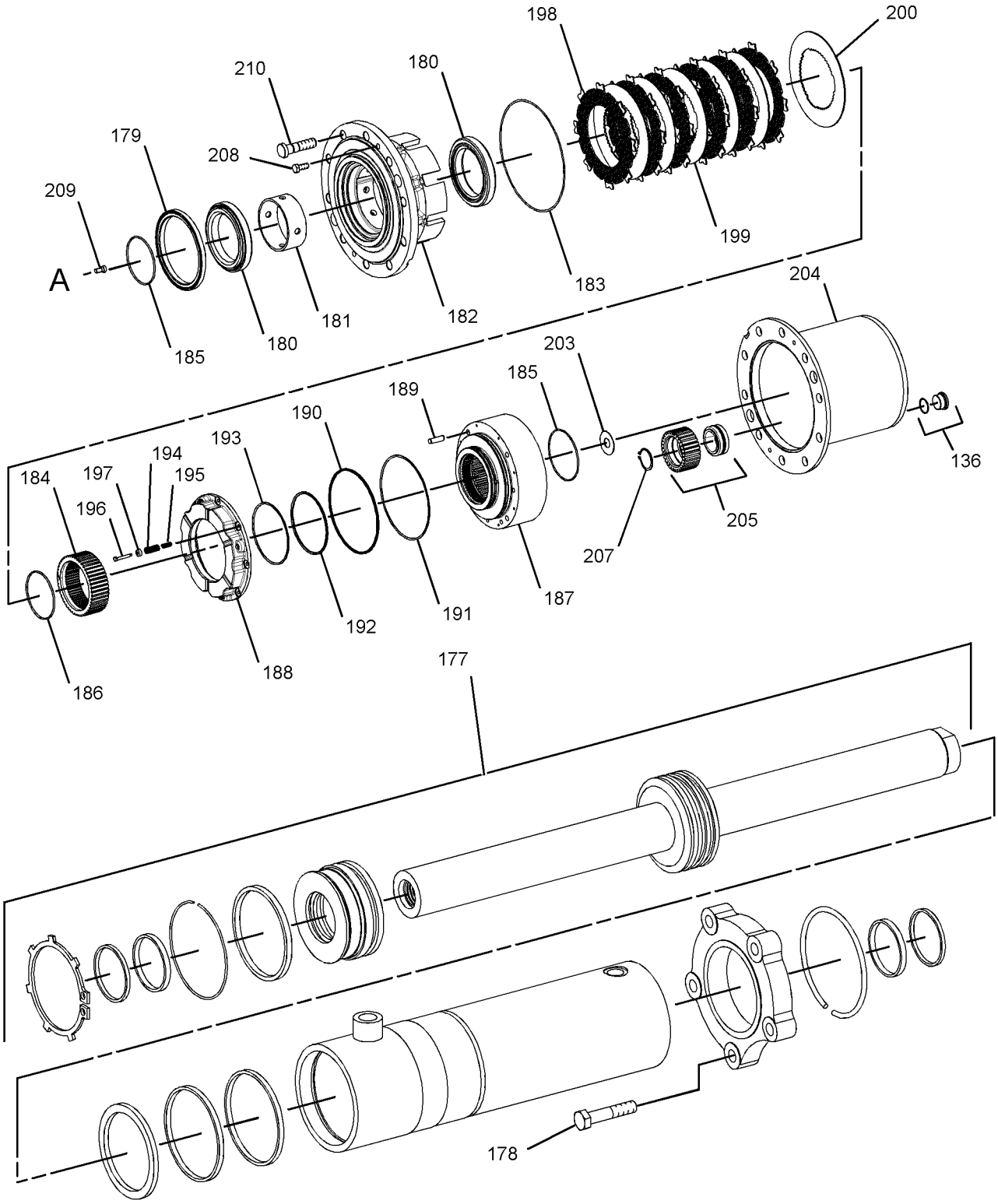

GRAPHIC #2 g02975976

331-1380 **AXLE GP-STEERING (**contd.**)** **i05558450**

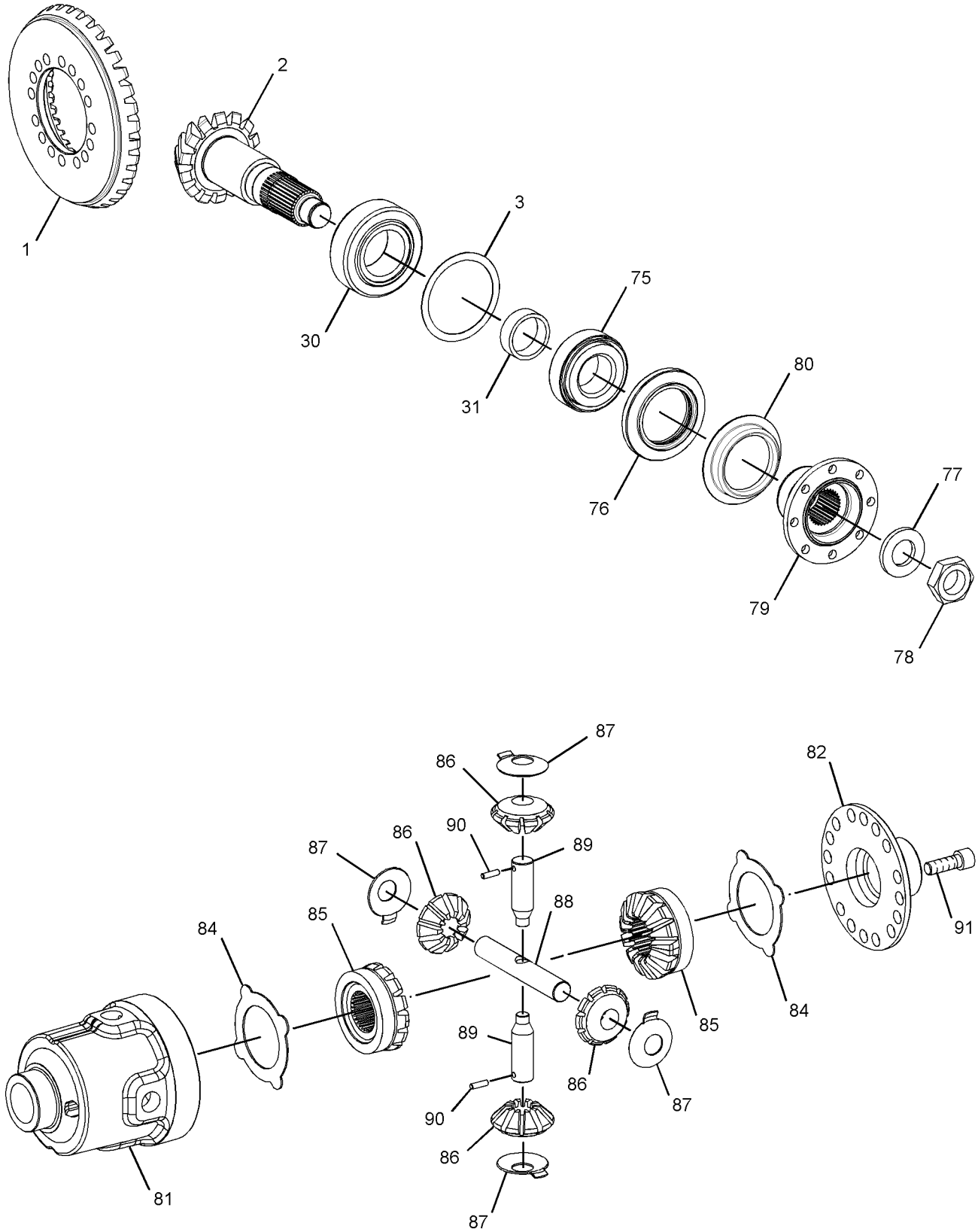

GRAPHIC #3 <END> g03217221

275-4912 COUPLING GP-FLEXIBLE

S/N: CH91-UP
PART OF 354-7270 INSTALLATION AR
ALSO AN ATTACHMENT

SMCS-3252 **i05970847**

NOTE	REF NO	GRAPHIC REF	PART NUMBER	QTY	PART NAME 1 2 3 4 5 6 (PRODUCT LEVEL)	SEE PAGE
Y	1	1	*134-9680*	1	COUPLING GP-PUMP	340
	2	1	**7X-3174**	8	BOLT (3/8-24X1.375-IN)	

Y - SEPARATE ILLUSTRATION

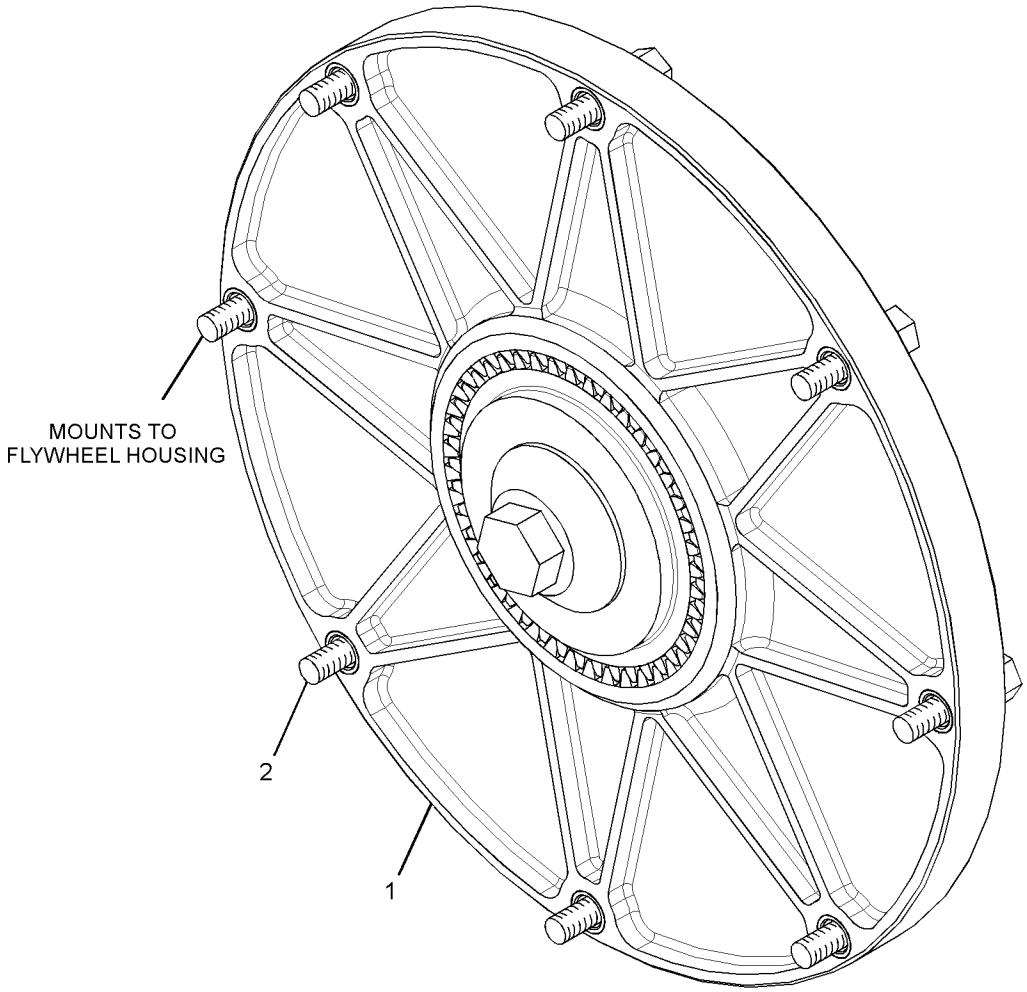

GRAPHIC #1 <END> g01317318

453-7111 POWER TRAIN AR

S/N: CH91-UP
PART OF 449-2823 COMMON AR
ALSO AN ATTACHMENT

SMCS-3000, 4000 **i05934411**

NOTE	PART NUMBER	QTY	PART NAME 1 2 3 4 5 6 (PRODUCT LEVEL)	SEE PAGE
Y	*241-7435*	1	AXLE & MTG AR-FRONT	226
Y	*241-7436*	1	AXLE & MTG AR-REAR	227
Y	*257-1709*	1	MOTOR & MTG GP-TRAVEL	582
Y	*228-3839*	1	SHAFT GP-DRIVE	246

Y - SEPARATE ILLUSTRATION

<END>

110-6135 SHAFT GP-DRIVE—CARRIER BEARING

S/N: CH91-UP
PART OF 228-3839 SHAFT GP-DRIVE
ALSO AN ATTACHMENT

SMCS-3253 **i05558201**

NOTE	REF NO	GRAPHIC REF	PART NUMBER	QTY	PART NAME 1 2 3 4 5 6 (PRODUCT LEVEL)	SEE PAGE
	1	1	**237-4163**	1	HOUSING-BRAKE	
	2	1	**5W-0116**	1	SHAFT	
	3	1	**5W-0118**	2	FLANGE	
	4	1	**5W-0119**	2	FLANGE-BRAKE	
	5	1	**5W-0122**	2	SPACER	
B	6	1	**5W-1422**	2	WASHER (80X100X0.1-MM THK)	
	7	1	**5W-2750**	2	BUSHING	
	8	1	**8B-5972**	2	BALL BEARING	
	9	1	**5W-6355**	1	PLUG	
	10	1	**5W-8380**	2	SEAL	
B	11	1	**5W-1418**	3	WASHER (28X40X0.1-MM THK)	
B	12	1	**5W-1419**	5	WASHER (28X40X0.3-MM THK)	
B	13	1	**5W-1420**	5	WASHER (28X40X1-MM THK)	
	14	1	**5W-1693**	1	WASHER (10.2X13.9X1-MM THK)	
M	15	1	**8T-4183**	2	BOLT (M12X1.75X40-MM)	
M	16	1	**8T-4195**	12	BOLT (M10X1.5X30-MM)	

B - USE AS REQUIRED
M - METRIC PART

110-6135 **SHAFT GP-DRIVE (**contd.**)** **i05558201**

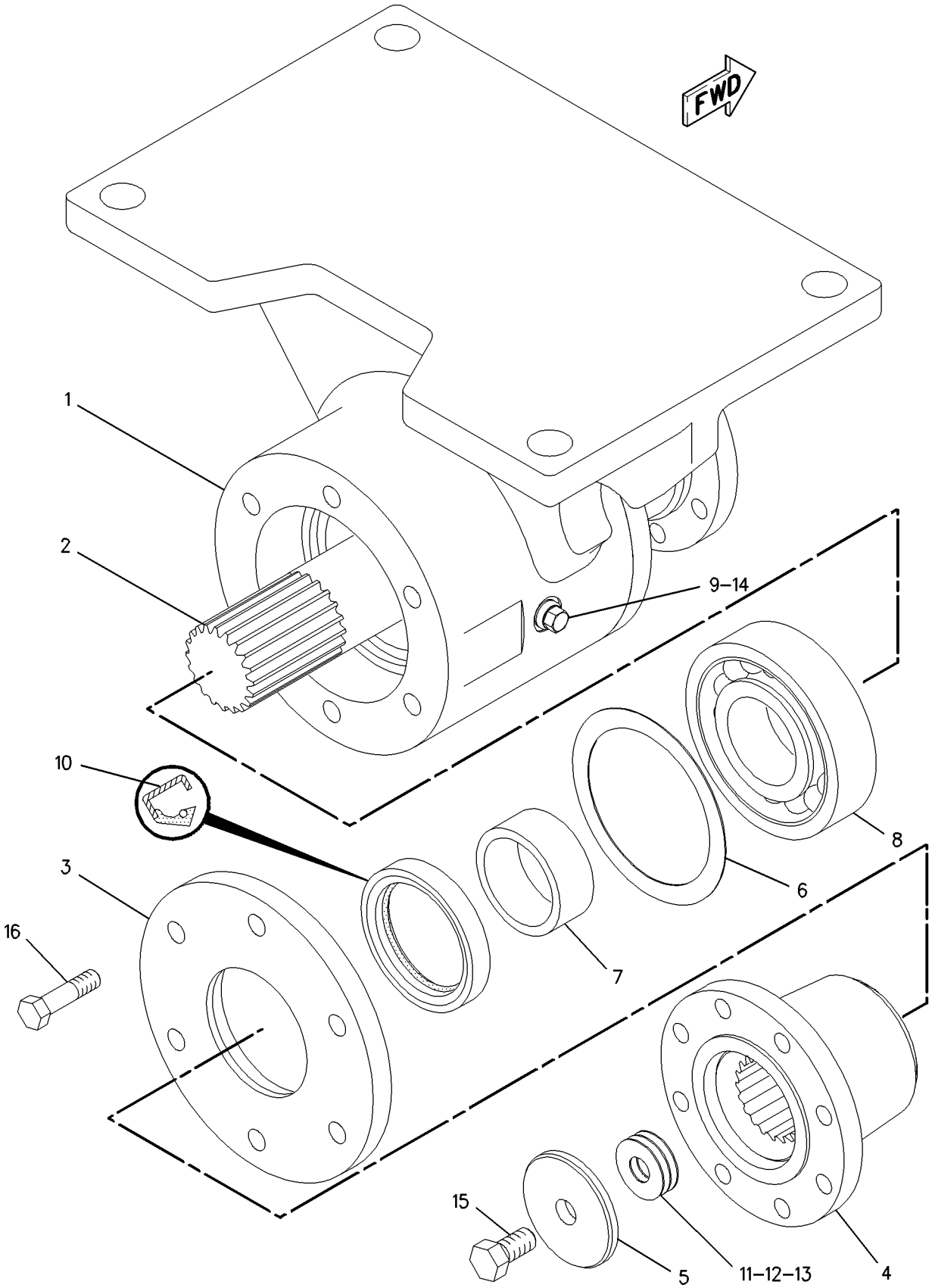

GRAPHIC #1 <END> g00923555

228-3839 SHAFT GP-DRIVE

S/N: CH91-UP
PART OF 453-7111 POWER TRAIN AR
ALSO AN ATTACHMENT

SMCS-3253 **i05970871**

NOTE	REF NO	GRAPHIC REF	PART NUMBER	QTY	PART NAME 1 2 3 4 5 6 (PRODUCT LEVEL)	SEE PAGE
M	1	1	**334-5425**	8	BOLT-SOCKET HEAD (M10X1X28-MM)	
	2	1	**8T-4123**	4	WASHER (22X35X3.5-MM THK)	
Y	3	1	*110-6135*	1	SHAFT GP-DRIVE (CARRIER BEARING)	244
Y	4	1	**355-4816**	1	UNIVERSAL JOINT GP (REAR)	275
M	5	1	**316-8230**	16	BOLT-SOCKET HEAD (M10X1X35-MM)	
M	6	1	**112-9145**	32	NUT (M10X1-THD)	
Y	7	1	**355-4815**	1	UNIVERSAL JOINT GP (FRONT)	274
	8	1	**130-0458**	2	ADAPTER	
M	9	1	**7X-2565**	4	BOLT (M20X2.5X100-MM)	
	10	1	**341-9167**	2	BLOCK	

M - METRIC PART
Y - SEPARATE ILLUSTRATION

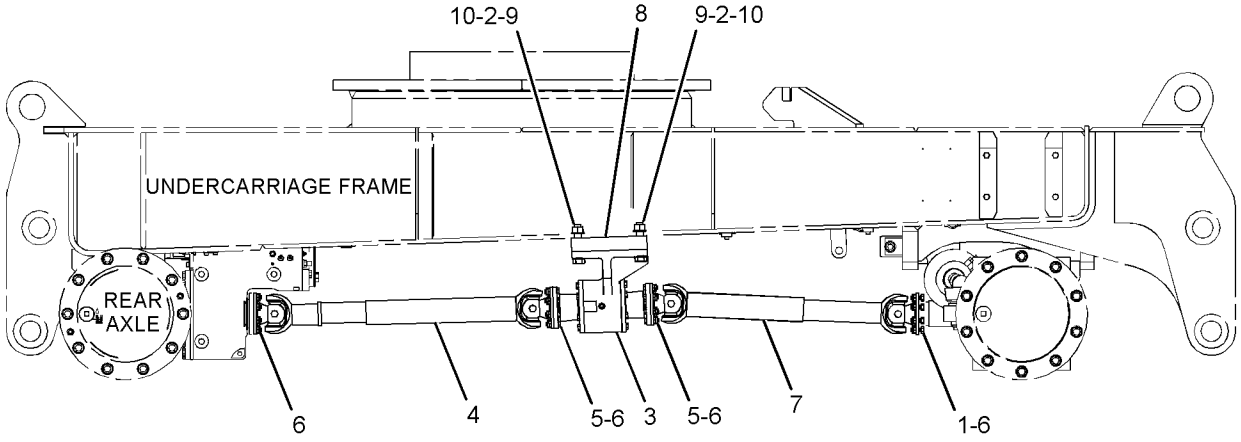

RIGHT SIDE VIEW

GRAPHIC #1 <END> g02418721

426-3987 TIRE & RIM AR

S/N: CH91-UP

AN ATTACHMENT

SMCS-4202, 4203, 4209 **i05510512**

NOTE	REF NO	GRAPHIC REF	PART NUMBER	QTY	PART NAME 1 2 3 4 5 6 (PRODUCT LEVEL)	SEE PAGE
Y	1	1	*436-8723*	2	TIRE & RIM GP (LH)	251
Y	2	1	*436-8724*	2	TIRE & RIM GP (RH)	252

Y - SEPARATE ILLUSTRATION

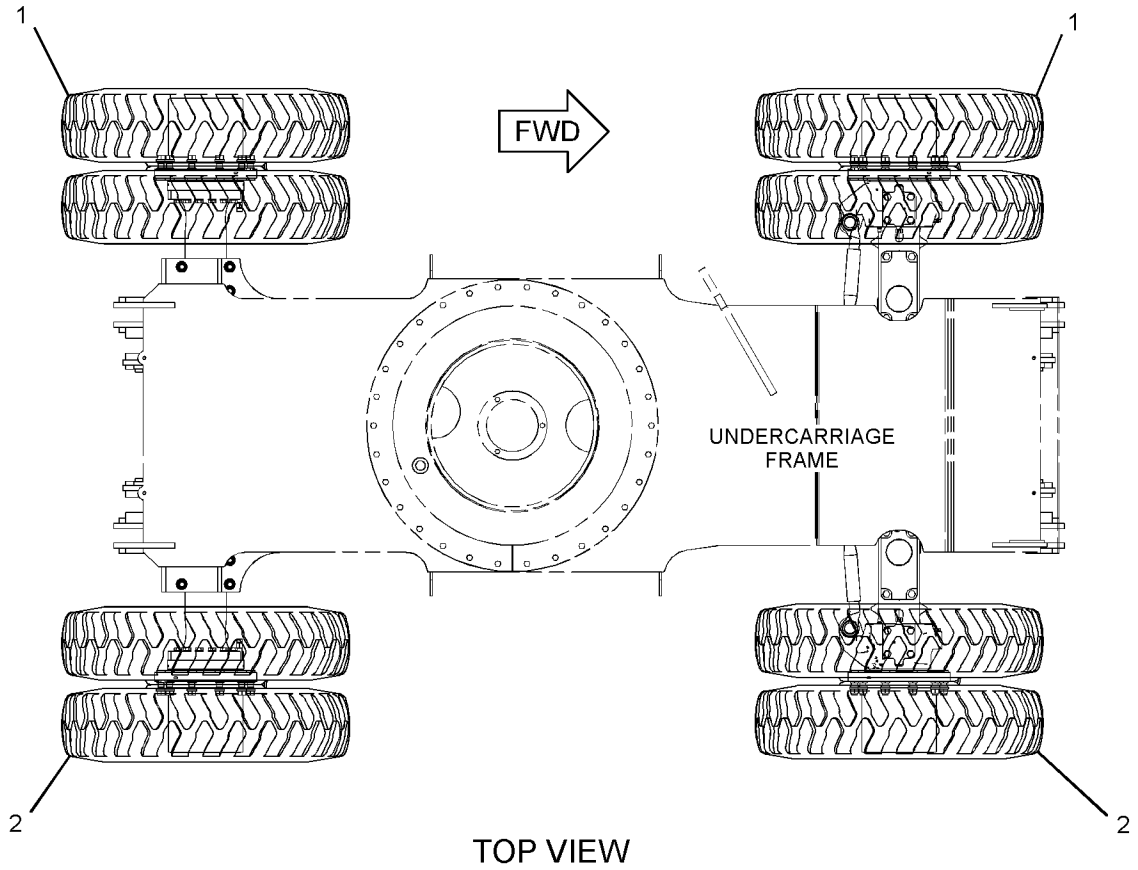

GRAPHIC #1 <END> g03492160

443-7807 TIRE & RIM AR

S/N: CH91-UP
PART OF 453-8185 DISTRIBUTION AR
AN ATTACHMENT

SMCS-4202, 4203, 4209 **i05510452**

NOTE	REF NO	GRAPHIC REF	PART NUMBER	QTY	PART NAME 1 2 3 4 5 6 (PRODUCT LEVEL)	SEE PAGE
	1	1	**326-7949**	4	RING-TIRE	
Y	2	1	*436-8723*	2	TIRE & RIM GP (LH)	251
Y	3	1	*436-8724*	2	TIRE & RIM GP (RH)	252

Y - SEPARATE ILLUSTRATION

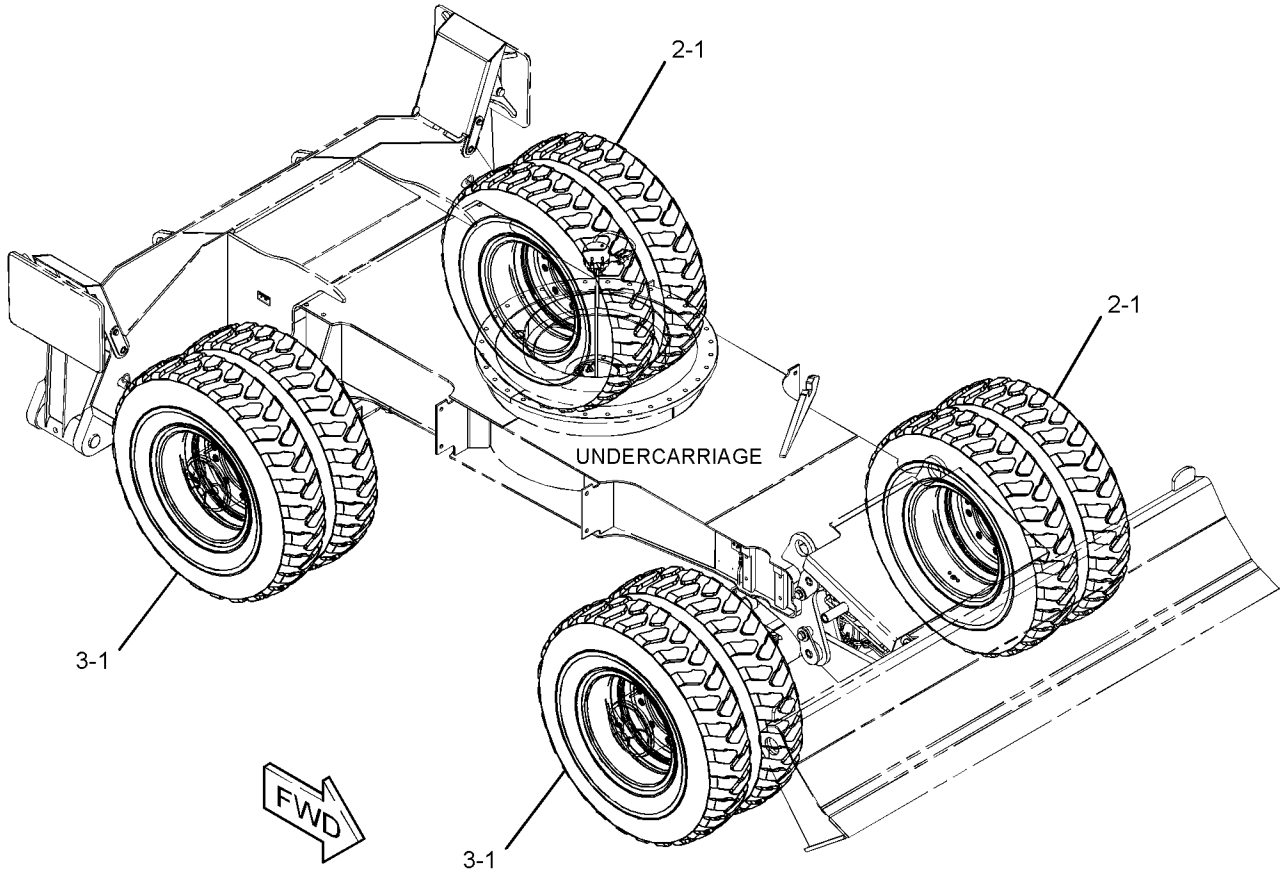

GRAPHIC #1 <END> g03506560

473-2842 TIRE & RIM AR

S/N: CH91-UP
PART OF 473-2841 DISTRIBUTION AR
AN ATTACHMENT

SMCS-4202, 4203, 4209

i06019379

NOTE	PART NUMBER	QTY	PART NAME 1 2 3 4 5 6 (PRODUCT LEVEL)	SEE PAGE
Y	*464-3050*	2	TIRE & RIM GP (LH)	255
Y	*464-3051*	2	TIRE & RIM GP (RH)	257

Y - SEPARATE ILLUSTRATION

<END>

490-6073 TIRE & RIM AR

S/N: CH91-UP
PART OF 517-3262 DISTRIBUTION AR
AN ATTACHMENT

SMCS-4202, 4203, 4209 **i06821482**

NOTE	REF NO	GRAPHIC REF	PART NUMBER	QTY	PART NAME 1 2 3 4 5 6 (PRODUCT LEVEL)	SEE PAGE
Y	1	1	*490-6072*	4	TIRE & RIM GP	261

Y - SEPARATE ILLUSTRATION

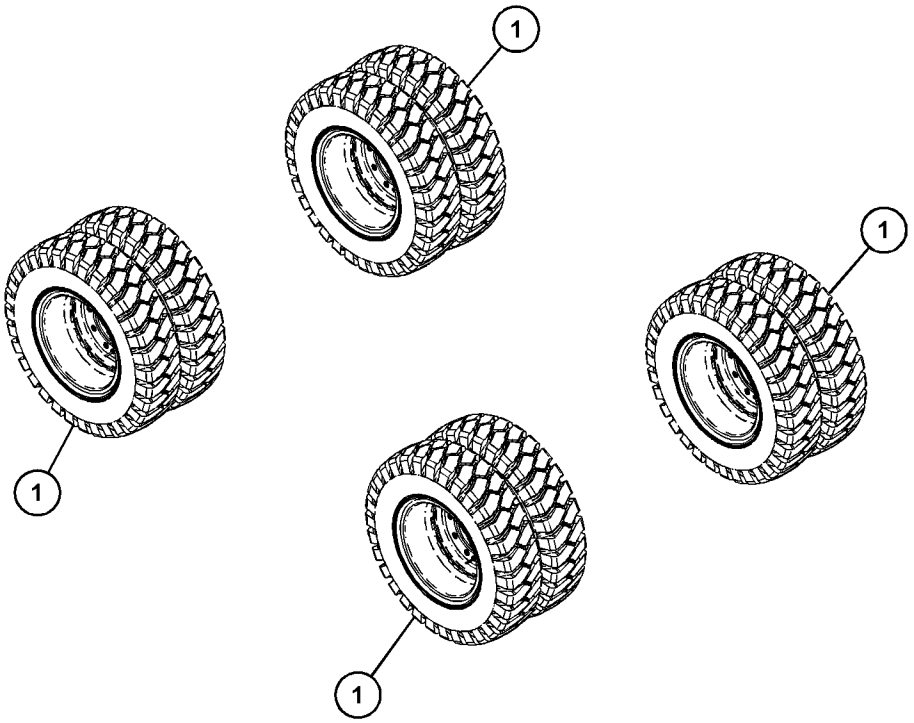

GRAPHIC #1 <END> g06129884

436-8723 TIRE & RIM GP–RH

S/N: CH91-UP
PART OF 426-3987, 443-7807 TIRE & RIM AR
AN ATTACHMENT

SMCS-4202, 4203 **i05867035**

NOTE	REF NO	GRAPHIC REF	PART NUMBER	QTY	PART NAME 1 2 3 4 5 6 (PRODUCT LEVEL)	SEE PAGE
	1	1	**224-6474**	1	EXTENSION AS-AIR	
Y	2	1	*436-8725*	1	TIRE & RIM GP	253
Y	3	1	*436-8726*	1	TIRE & RIM GP	254
M	4	1	**133-8831**	2	SCREW (M8X1.25X80-MM)	
M	5	1	**5C-7261**	2	NUT (M8X1.25-THD)	
	6	1	**7X-0613**	2	WASHER-HARD (8.8X25.5X5-MM THK)	

M - METRIC PART
Y - SEPARATE ILLUSTRATION

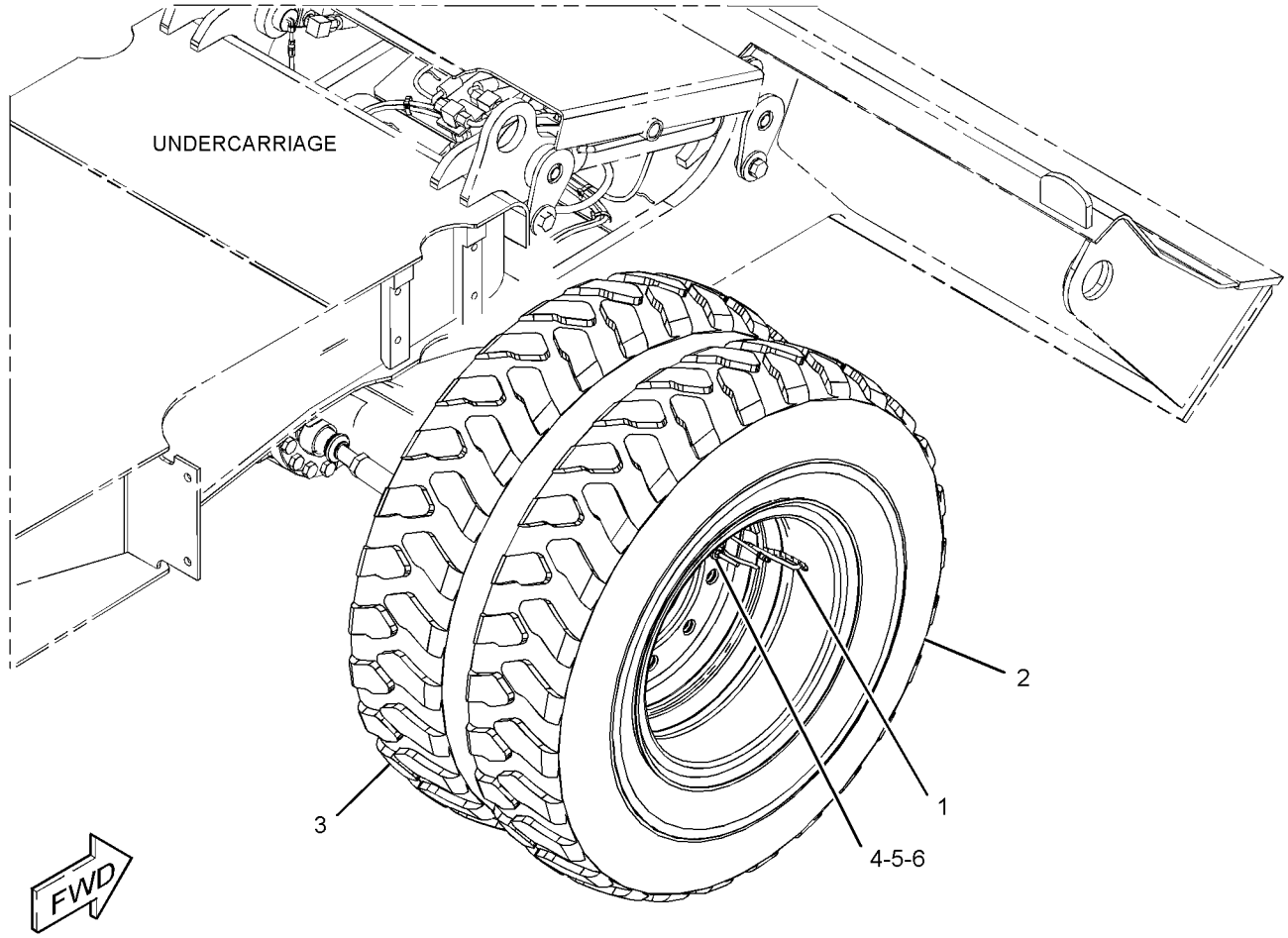

GRAPHIC #1 <END> g03506571

436-8724 TIRE & RIM GP–RH

S/N: CH91-UP

PART OF 426-3987, 443-7807 TIRE & RIM AR

AN ATTACHMENT

SMCS-4202, 4203 **i05510472**

NOTE	REF NO	GRAPHIC REF	PART NUMBER	QTY	PART NAME 1 2 3 4 5 6 (PRODUCT LEVEL)	SEE PAGE
	1	1	**224-6474**	1	EXTENSION AS-AIR	
Y	2	1	*436-8725*	1	TIRE & RIM GP	253
Y	3	1	*436-8726*	1	TIRE & RIM GP	254
M	4	1	**133-8831**	2	SCREW (M8X1.25X80-MM)	
M	5	1	**5C-7261**	2	NUT (M8X1.25-THD)	
	6	1	**7X-0613**	2	WASHER-HARD (8.8X25.5X5-MM THK)	

M - METRIC PART
Y - SEPARATE ILLUSTRATION

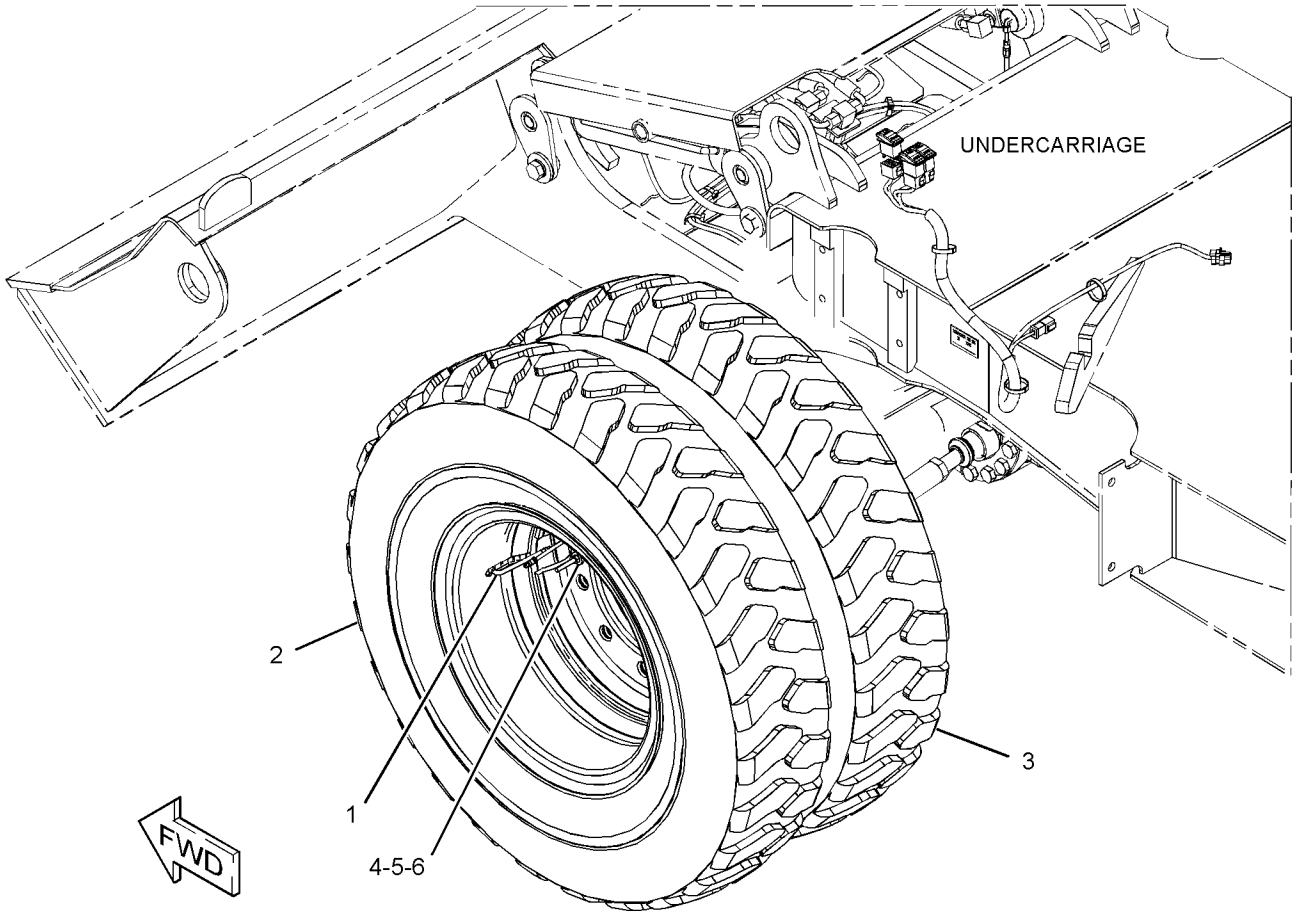

GRAPHIC #1 <END> g03506566

436-8725 TIRE & RIM GP

S/N: CH91-UP
10X20
PART OF 436-8723, 436-8724 TIRE & RIM GP
AN ATTACHMENT

SMCS-4202, 4203 **i05510471**

NOTE	REF NO	GRAPHIC REF	PART NUMBER	QTY	PART NAME 1 2 3 4 5 6 (PRODUCT LEVEL)	SEE PAGE
	1	1	**5W-5123**	1	RING-SEAL	
	2	1	**8U-7339**	1	VALVE AS-AIR	
	3	1	**224-6475**	1	RIM AS	
	4	1	*442-0209*	1	TIRE (10-20)	

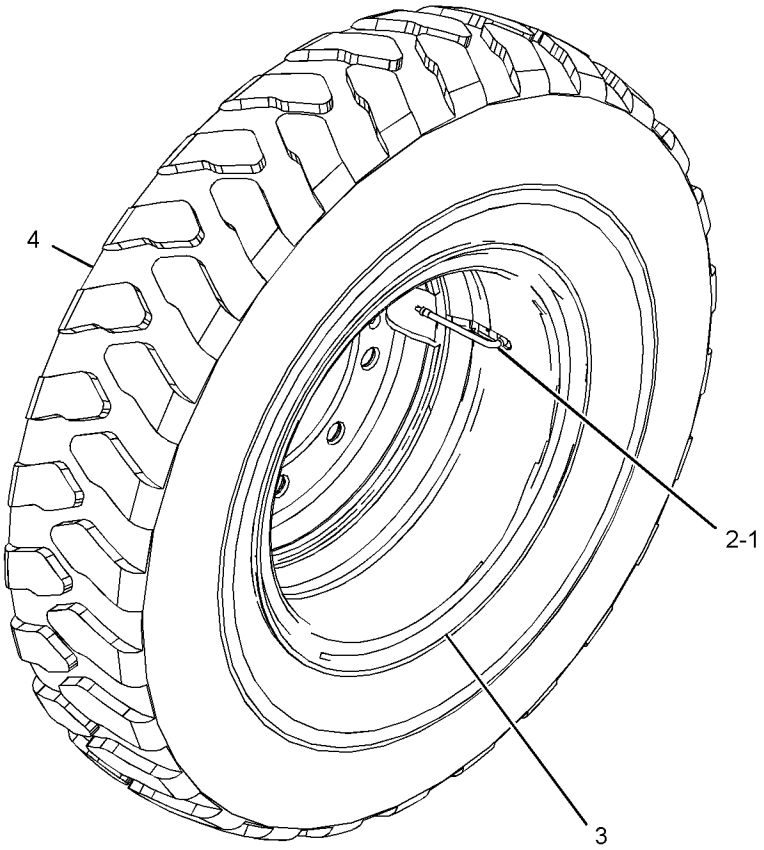

GRAPHIC #1 <END> g03507838

436-8726 TIRE & RIM GP

S/N: CH91-UP
10X20
PART OF 436-8723, 436-8724 TIRE & RIM GP
AN ATTACHMENT

SMCS-4202, 4203 **i05510469**

NOTE	REF NO	GRAPHIC REF	PART NUMBER	QTY	PART NAME 1 2 3 4 5 6 (PRODUCT LEVEL)	SEE PAGE
	1	1	*5W-2234*	1	FLAP	
	2	1	*5W-5121*	1	TUBE-TIRE	
	3	1	**5W-5123**	1	RING-SEAL	
	4	1	**8U-7339**	1	VALVE AS-AIR	
	5	1	**224-6475**	1	RIM AS	
	6	1	*442-0209*	1	TIRE (10-20)	

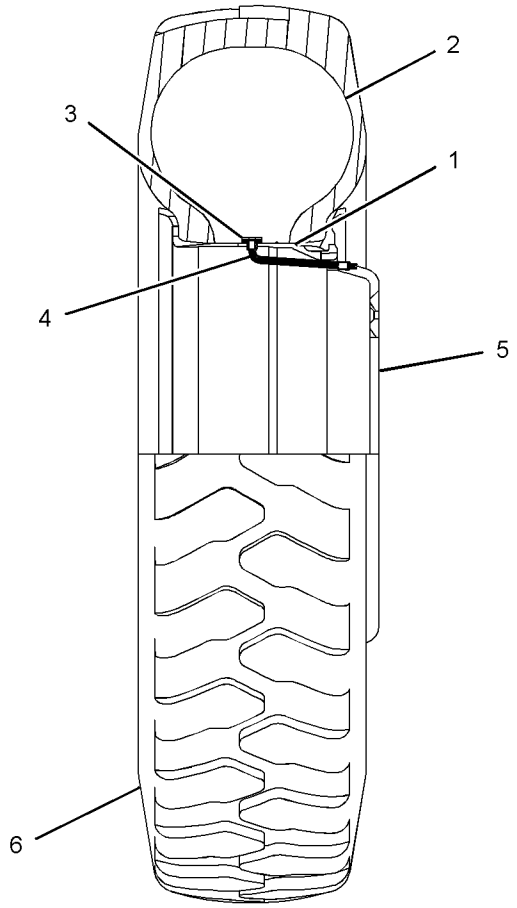

GRAPHIC #1 <END> g03506596

464-3050 TIRE & RIM GP—LH

S/N: CH91-116
PART OF 473-2842 TIRE & RIM AR
AN ATTACHMENT

SMCS-4202, 4203

i06019353

NOTE	PART NUMBER	QTY	PART NAME 1 2 3 4 5 6 (PRODUCT LEVEL)	SEE PAGE
Y	*464-3052*	1	TIRE & RIM GP	259
Y	*464-3053*	1	TIRE & RIM GP	259
	224-6474	1	EXTENSION AS-AIR	
M	**344-5674**	2	NUT (M8X1.25-THD)	
	326-7949	1	RING-TIRE	
M	**133-8831**	2	SCREW (M8X1.25X80-MM)	
	7X-0613	2	WASHER-HARD (8.8X25.5X5-MM THK)	

M - METRIC PART
Y - SEPARATE ILLUSTRATION

<END>

464-3050 TIRE & RIM GP–LH

S/N: CH9117-UP
PART OF 473-2842 TIRE & RIM AR
AN ATTACHMENT

SMCS-4202, 4203 **i07291868**

NOTE	REF NO	GRAPHIC REF	PART NUMBER	QTY	PART NAME 1 2 3 4 5 6 (PRODUCT LEVEL)	SEE PAGE
	1	1	**224-6474**	1	EXTENSION AS-AIR	
Y	2	1	*464-3052*	1	TIRE & RIM GP	259
Y	3	1	*464-3053*	1	TIRE & RIM GP	259
C	4	1	**464-3055**	1	RING-TIRE	
M	5	1	**133-8831**	2	SCREW (M8X1.25X80-MM)	
M	6	1	**344-5674**	2	NUT (M8X1.25-THD)	
	7	1	**7X-0613**	2	WASHER-HARD (8.8X25.5X5-MM THK)	

C - CHANGE FROM PREVIOUS TYPE
M - METRIC PART
Y - SEPARATE ILLUSTRATION

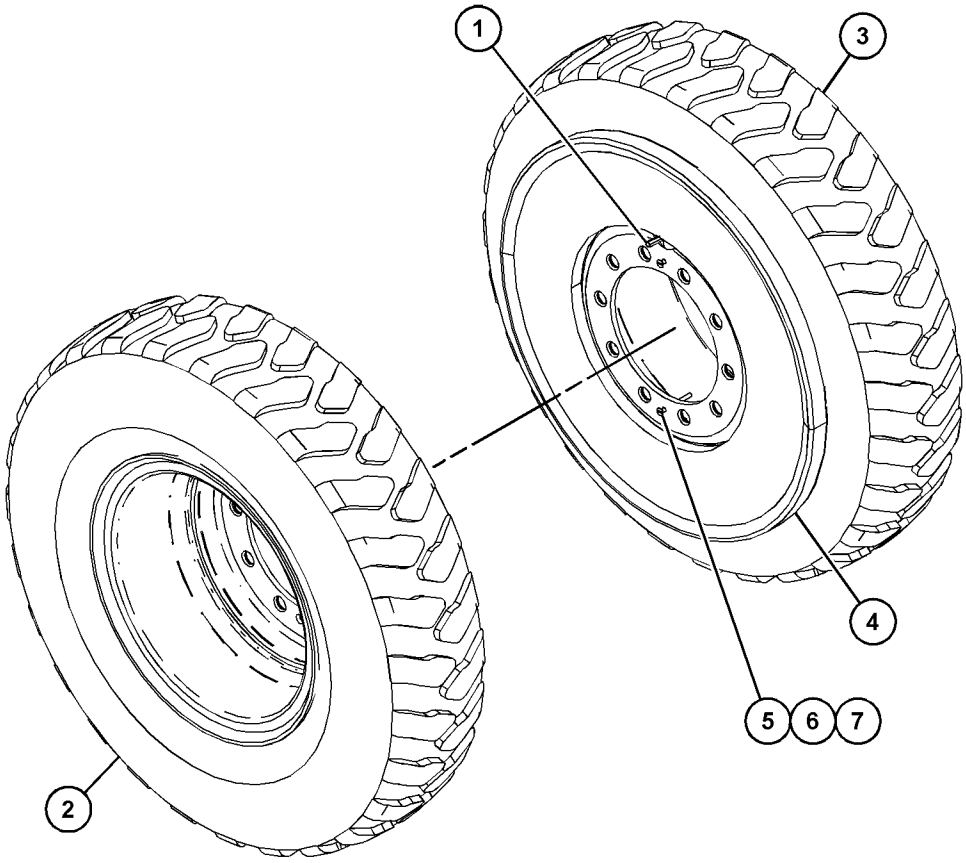

GRAPHIC #1 <END> g06290674

464-3051 TIRE & RIM GP–RH

S/N: CH91-116
PART OF 473-2842 TIRE & RIM AR
AN ATTACHMENT

SMCS-4202, 4203

i06019391

NOTE	PART NUMBER	QTY	PART NAME 1 2 3 4 5 6 (PRODUCT LEVEL)	SEE PAGE
Y	*464-3052*	1	TIRE & RIM GP	259
Y	*464-3053*	1	TIRE & RIM GP	259
	224-6474	1	EXTENSION AS-AIR	
M	**344-5674**	2	NUT (M8X1.25-THD)	
	326-7949	1	RING-TIRE	
M	**133-8831**	2	SCREW (M8X1.25X80-MM)	
	7X-0613	2	WASHER-HARD (8.8X25.5X5-MM THK)	

M - METRIC PART
Y - SEPARATE ILLUSTRATION

<END>

464-3051 TIRE & RIM GP–RH

S/N: CH9117-UP
PART OF 473-2842 TIRE & RIM AR
AN ATTACHMENT

SMCS-4202, 4203 **i07291869**

NOTE	REF NO	GRAPHIC REF	PART NUMBER	QTY	PART NAME 1 2 3 4 5 6 (PRODUCT LEVEL)	SEE PAGE
	1	1	**224-6474**	1	EXTENSION AS-AIR	
Y	2	1	*464-3052*	1	TIRE & RIM GP	259
Y	3	1	*464-3053*	1	TIRE & RIM GP	259
C	4	1	**464-3055**	1	RING-TIRE	
M	5	1	**133-8831**	2	SCREW (M8X1.25X80-MM)	
M	6	1	**344-5674**	2	NUT (M8X1.25-THD)	
	7	1	**7X-0613**	2	WASHER-HARD (8.8X25.5X5-MM THK)	

C - CHANGE FROM PREVIOUS TYPE
M - METRIC PART
Y - SEPARATE ILLUSTRATION

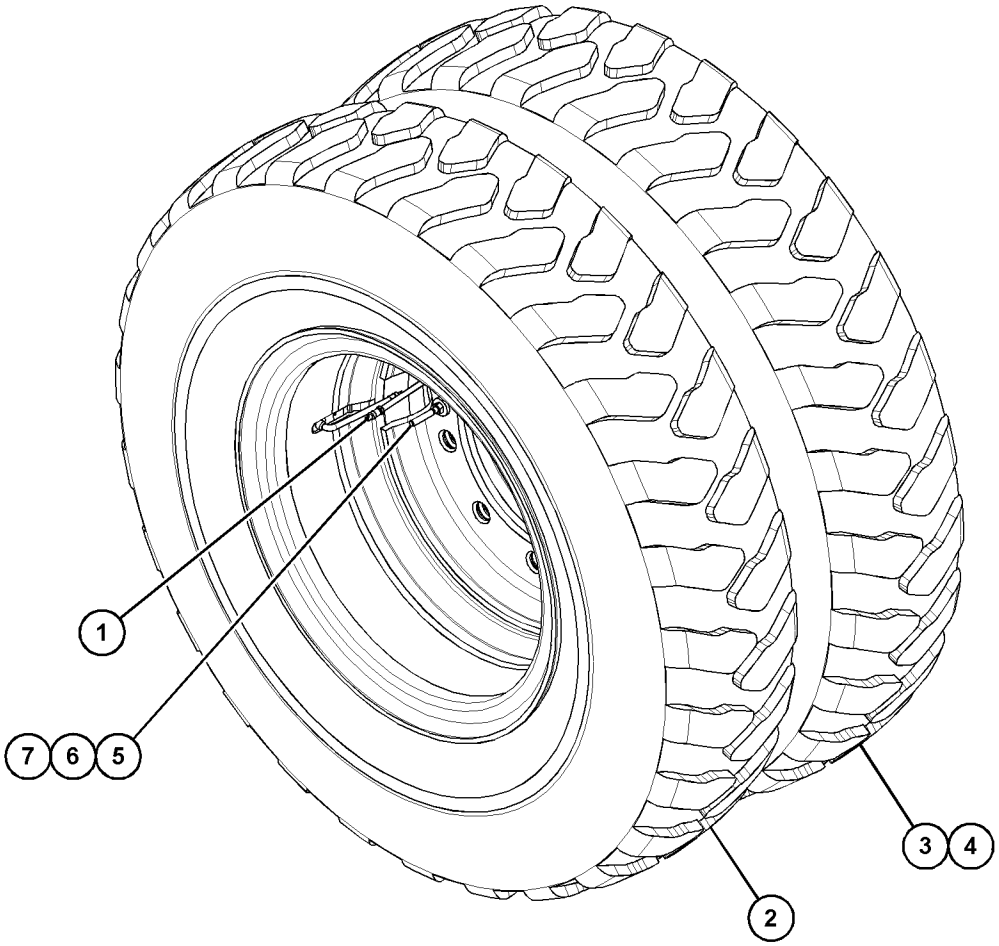

GRAPHIC #1 <END> g06290695

464-3052 TIRE & RIM GP

S/N: CH91-UP
10X20
PART OF 464-3050, 464-3051 TIRE & RIM GP
AN ATTACHMENT

SMCS-4202, 4203 **i06019418**

NOTE	PART NUMBER	QTY	PART NAME 1 2 3 4 5 6 (PRODUCT LEVEL)	SEE PAGE
	5W-2234	1	FLAP	
	224-6475	1	RIM AS	
	5W-5123	1	RING-SEAL	
	464-3054	1	TIRE (10-20)	
	5W-5121	1	TUBE-TIRE	
	8U-7339	1	VALVE AS-AIR	

<END>

464-3053 TIRE & RIM GP

S/N: CH91-UP
10X20
PART OF 464-3050, 464-3051 TIRE & RIM GP
AN ATTACHMENT

SMCS-4202, 4203 **i06019439**

NOTE	PART NUMBER	QTY	PART NAME 1 2 3 4 5 6 (PRODUCT LEVEL)	SEE PAGE
	5W-2234	1	FLAP	
	224-6475	1	RIM AS	
	5W-5123	1	RING-SEAL	
	464-3054	1	TIRE (10-20)	
	5W-5121	1	TUBE-TIRE	
	8U-7339	1	VALVE AS-AIR	

<END>

490-6071 TIRE & RIM GP

S/N: CH91-UP
10-20
PART OF 490-6072 TIRE & RIM GP
AN ATTACHMENT

SMCS-4202, 4203 **i06821484**

NOTE	REF NO	GRAPHIC REF	PART NUMBER	QTY	PART NAME 1 2 3 4 5 6 (PRODUCT LEVEL)	SEE PAGE
	1	1	**5W-2234**	1	FLAP	
	2	1	**5W-5121**	1	TUBE-TIRE	
	3	1	**5W-5123**	1	RING-SEAL	
	4	1	**8U-7339**	1	VALVE AS-AIR	
	5	1	**224-6475**	1	RIM AS	
	6	1	*490-6070*	1	TIRE	

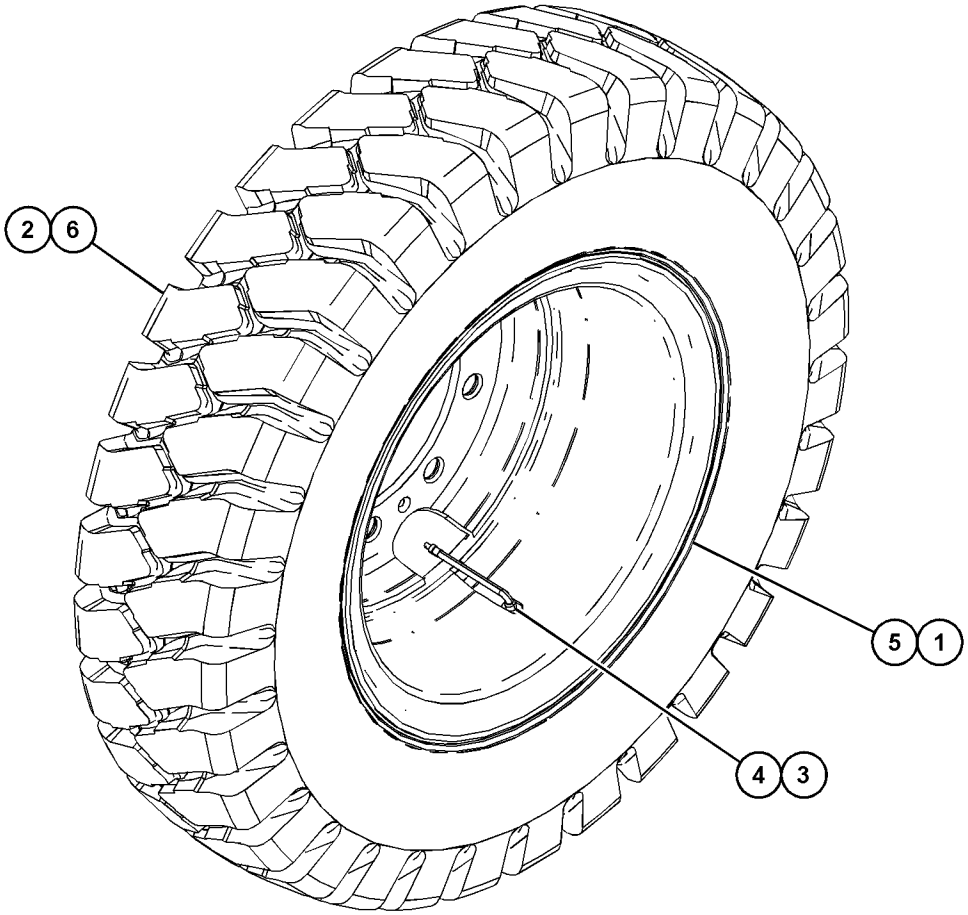

GRAPHIC #1 <END> g06129900

490-6072 TIRE & RIM GP

S/N: CH91-149
PART OF 490-6073 TIRE & RIM AR
AN ATTACHMENT

SMCS-4202, 4203 **i06821483**

NOTE	REF NO	GRAPHIC REF	PART NUMBER	QTY	PART NAME 1 2 3 4 5 6 (PRODUCT LEVEL)	SEE PAGE
	1	1	**224-6474**	1	EXTENSION AS-AIR	
	2	1	**326-7949**	1	RING-TIRE	
Y	3	1	*490-6071*	2	TIRE & RIM GP	260
M	4	1	**133-8831**	2	SCREW (M8X1.25X80-MM)	
M	5	1	**344-5674**	2	NUT (M8X1.25-THD)	
	6	1	**7X-0613**	2	WASHER-HARD (8.8X25.5X5-MM THK)	

M - METRIC PART
Y - SEPARATE ILLUSTRATION

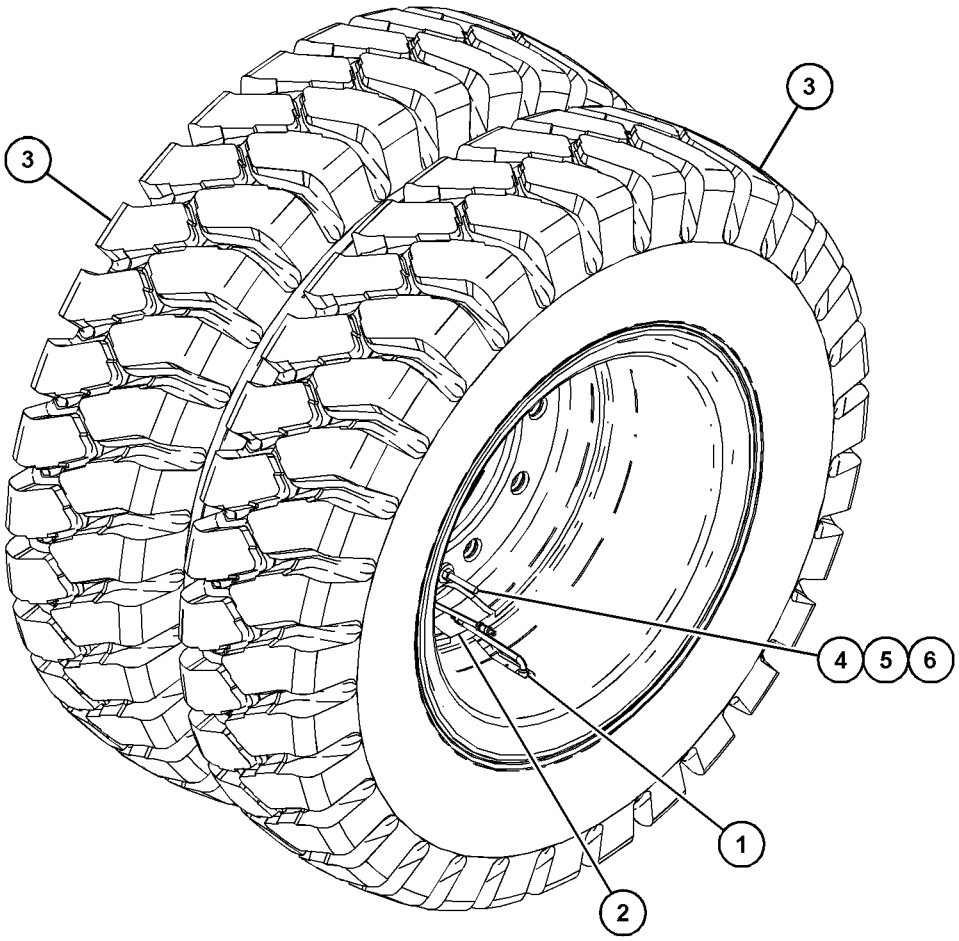

GRAPHIC #1 <END> g06129918

490-6072 TIRE & RIM GP

S/N: CH9150-UP
PART OF 490-6073 TIRE & RIM AR
AN ATTACHMENT

SMCS-4202, 4203 **i07291867**

NOTE	REF NO	GRAPHIC REF	PART NUMBER	QTY	PART NAME 1 2 3 4 5 6 (PRODUCT LEVEL)	SEE PAGE
	1	1	**224-6474**	1	EXTENSION AS-AIR	
C	2	1	**464-3055**	1	RING-TIRE	
Y	3	1	*490-6071*	2	TIRE & RIM GP	260
M	4	1	**133-8831**	2	SCREW (M8X1.25X80-MM)	
M	5	1	**344-5674**	2	NUT (M8X1.25-THD)	
	6	1	**7X-0613**	2	WASHER-HARD (8.8X25.5X5-MM THK)	

C - CHANGE FROM PREVIOUS TYPE
M - METRIC PART
Y - SEPARATE ILLUSTRATION

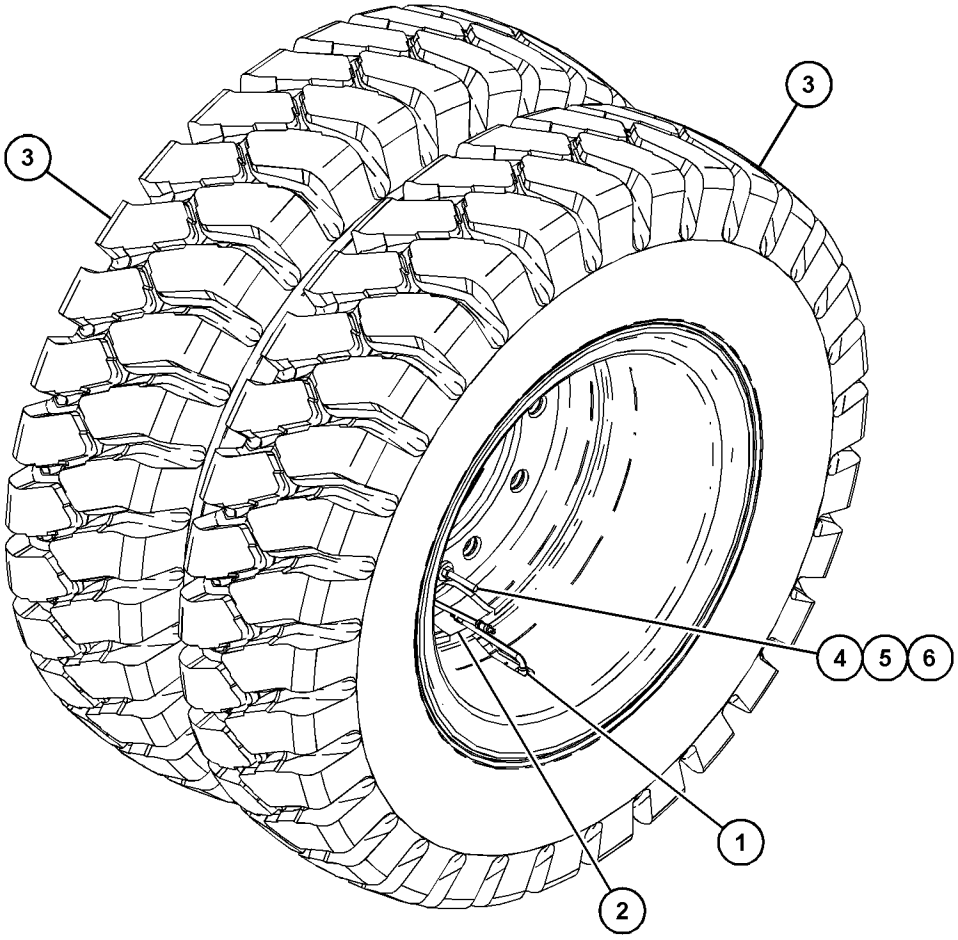

GRAPHIC #1 <END> g06129918

416-1916 TRANSMISSION GP

S/N: CH91-UP
PART OF 331-1385 AXLE & TRANSMISSION AR
ALSO AN ATTACHMENT

SMCS-3030 **i06023387**

NOTE	REF NO	GRAPHIC REF	PART NUMBER	QTY	PART NAME 1 2 3 4 5 6 (PRODUCT LEVEL)	SEE PAGE
	1	1	**238-4672**	1	PISTON AS	
		1	**333-8007**	1	SEAL-RING	
	2	1	**238-4673**	1	SPRING	
	3	1	**238-5087**	1	SEAL-O-RING	
	4	1	**238-4674**	1	HOUSING-DRIVE	
	5	1,7	**5W-5475**	3	SEAL-O-RING	
M	6	1	**6V-8675**	5	BOLT (M12X1.75X35-MM)	
	7	1,4	**107-5665**	2	SEAL-O-RING	
	8	2	**428-6872**	1	HOUSING AS	
	8A	2	**238-4678**	8	PLUG	
	9	2	**095-0882**	1	PIN-SPRING	
	10	2	**238-4676**	1	SENSOR AS-SPEED (TRANSMISSION OUTPUT)	
		2	**7L-2180**	1	SEAL-O-RING	
	11	2	**170-0831**	1	BOLT	
	12	2	**238-4677**	2	PLUG	
	13	2	**9R-3176**	2	SEAL-O-RING	
J	14	2,6	**3T-6376**	8	PLUG	
J	15	2,6	**6T-6308**	6	SEAL-O-RING	
	16	2	**9X-0630**	3	VALVE	
	17	2	**9W-4926**	2	PLUG	
	18	2	**6T-6408**	2	SEAL-O-RING	
	19	2	**366-1892**	1	FITTING AS	
	20	2	**5W-1693**	2	WASHER (10.2X13.9X1-MM THK)	
	21	2	**238-4680**	1	FITTING	
	22	2	**8U-1961**	1	BALL	
	23	2	**238-4682**	1	SPRING	
	24	2	**238-4683**	1	BREATHER (TRANSMISSION)	
	25	3	**238-4684**	12	DISC (1.6-MM THK)	
B	26	3	**238-4686**	11	DISC-CLUTCH (1.4-MM THK)	
B	27	3	**238-4685**	3	DISC-CLUTCH (1.2-MM THK)	
B	28	3	**238-4687**	1	DISC-CLUTCH (1.6-MM THK)	
	29	3	**8U-1278**	1	RING-RETAINING	
	30	3	**238-4689**	1	SHIM (1-MM THK)	
	31	3	**238-4690**	1	SPRING	
	32	3	**238-4691**	1	RING	
	33	3	**238-4692**	2	WASHER-THRUST (55X78X1-MM THK)	
	34	3	**263-4911**	1	BEARING-THRUST	
	35	3	**238-4694**	1	PISTON	
	36	3	**238-4695**	1	SPRING	
	37	4	**169-8397**	1	RETAINER	
	38	4	**8U-5983**	11	WASHER (140X190.5X11-MM THK)	
B	39	4	**428-6873**	9	DISC-CLUTCH (2.9-MM THK)	
	40	4	**8U-5988**	8	DISC-FRICTION (3-MM THK)	
B			**428-6874**	1	DISC-CLUTCH (3-MM THK)	
B			**428-6875**	1	DISC-CLUTCH (3.3-MM THK)	
B			**428-6876**	1	DISC-CLUTCH (2.8-MM THK)	

416-1916 **TRANSMISSION GP** (contd.) **i06023387**

NOTE	REF NO	GRAPHIC REF	PART NUMBER	QTY	PART NAME 1 2 3 4 5 6 (PRODUCT LEVEL)	SEE PAGE
B			**428-6877**	1	DISC-CLUTCH (3.5-MM THK)	
B			**428-6878**	1	DISC-CLUTCH (3.4-MM THK)	
B			**428-6879**	1	DISC-CLUTCH (3.7-MM THK)	
B			**428-6880**	1	DISC-CLUTCH (3.2-MM THK)	
B			**428-6881**	1	DISC-CLUTCH (3.8-MM THK)	
B			**438-6960**	1	DISC-CLUTCH (3.9-MM THK)	
	50	4	**238-4696**	1	RING	
	51	4	**238-4697**	1	RING	
	52	4	**238-5088**	2	SEAL-O-RING	
	53	4	**238-4698**	1	SEAL	
	54	4	**238-4699**	1	PISTON	
	55	4	**238-4700**	1	SPRING	
	56	4	**238-4701**	1	SEAL	
	57	4	**238-4702**	1	SEAL	
	58	4	**238-4703**	1	SEAL	
	59	4	**238-4704**	1	SEAL	
	60	4	**238-4705**	2	PIN	
	61	5	**291-9451**	3	PINION-PLANETARY	
	62	5	**291-9452**	3	BEARING-CYLINDER ROLLER	
	63	5	**238-6588**	6	PIN-SPRING	
	64	5	**238-4709**	2	BEARING	
	65	5	**238-5653**	3	RING-RETAINING (EXTERNAL)	
	66	5	**238-4710**	1	GEAR-INTERNAL	
	67	5	**238-4711**	1	BALL BEARING	
	68	5	**9T-2584**	1	RING-RETAINING (INTERNAL)	
	69	5	**238-4714**	1	RING-CENTERING	
	70	5	**238-4713**	1	RING-RETAINING	
	71	5	**095-0930**	1	RING-RETAINING (EXTERNAL)	
	72	5	**238-4715**	1	WASHER-SPECIAL	
M	73	5,7	**6V-5842**	6	BOLT (M10X1.5X40-MM)	
	74	5	**132-4295**	1	CAGE	
	75	5	**375-6310**	1	CARRIER-PLANETARY	
	76	5	**303-4154**	1	SHAFT-DRIVE	
J	77	6	**238-4717**	1	SHAFT-PUMP	
J	78	6	**121-8088**	1	BALL BEARING	
J	79	6	**096-2323**	1	RING-RETAINING (EXTERNAL)	
J	80	6	**121-8089**	1	COVER	
J	81	6	**095-0934**	1	RING-RETAINING (INTERNAL)	
J	82	6	**238-4718**	1	HOUSING	
J	83	6	**149-5881**	1	VALVE AS-RELIEF (DOWNSHIFT INHIBITOR)	
	83A	6	**169-8432**	1	SEAL	
	83B	6	**169-8433**	1	SEAL	
J	84	6	**147-5044**	1	FILTER ELEMENT-OIL (TRANSMISSION)	
J	85	6	**238-4719**	1	SEAL	
J	86	6	**238-4731**	1	COVER	
JM	87	6	**7X-2537**	7	BOLT (M8X1.25X35-MM)	
J	88	6	**121-8093**	10	WASHER (8.4X17X1.5-MM THK)	
J	89	6	**121-8101**	1	SLEEVE	
J	90	6	**238-4721**	1	ROTOR AS	
J	91	6	**121-8097**	3	SPRING	
J	92	6	**121-8098**	4	BALL	

416-1916 **TRANSMISSION GP** (contd.) **i06023387**

NOTE	REF NO	GRAPHIC REF	PART NUMBER	QTY	PART NAME 1 2 3 4 5 6 (PRODUCT LEVEL)	SEE PAGE
JM	93	6	**6V-6936**	3	BOLT (M6X1X22-MM)	
J	94	6	**121-8094**	2	SEAL-O-RING	
	95	6	**7T-0510**	2	BOLT	
M	96	6	**8T-2224**	1	BOLT-SOCKET HEAD (M8X1.25X85-MM)	
	97	7	**238-4723**	1	SHROUD	
	98	7	**238-4725**	1	GEAR	
	99	7	**238-4726**	1	PLATE-DEFLECTOR	
	100	7	**290-8580**	1	COVER-BEARING	
	101	7	**110-0124**	1	SHIM (2-MM THK)	
	102	7	**110-0122**	1	SHIM (1.8-MM THK)	
	103	7	**110-0121**	1	SHIM (1.5-MM THK)	
	104	7	**110-0120**	1	SHIM (1.2-MM THK)	
	105	7	**129-9912**	1	SHIM (1.9-MM THK)	
	106	7	**129-9913**	1	SHIM (1.7-MM THK)	
B			**129-9914**	1	SHIM (1.6-MM THK)	
B			**129-9915**	1	SHIM (1.4-MM THK)	
B			**129-9916**	1	SHIM (1.3-MM THK)	
B			**190-8567**	1	SHIM (1-MM THK)	
B			**190-8566**	1	SHIM (0.9-MM THK)	
B			**190-8565**	1	SHIM (0.8-MM THK)	
B			**190-8563**	1	SHIM (0.7-MM THK)	
B			**190-8561**	1	SHIM (0.6-MM THK)	
B			**5W-2074**	1	SHIM (0.5-MM THK)	
B			**5W-2073**	1	SHIM (0.3-MM THK)	
B			**5W-3644**	1	SHIM (0.2-MM THK)	
B			**5W-2072**	1	SHIM (0.1-MM THK)	
B			**193-1123**	1	SHIM (0.75-MM THK)	
B			**193-1124**	1	SHIM (0.65-MM THK)	
	121	7	**8U-6075**	1	SEAL-LIP TYPE	
	122	7	**161-6578**	1	RING-SNAP	
	123	7	**8U-3284**	10	STUD (M12X1.75X50-MM)	
	124	7	**121-8117**	1	SEAL-O-RING	
	125	7	**121-8129**	1	BEARING-ROLLER	
	126	7	**238-4729**	1	BUSHING	
B	127	7	**8U-6068**	1	WASHER (50.1X62X2.05-MM THK)	
B			**8U-6069**	1	WASHER (50.1X62X2.1-MM THK)	
B			**8U-6072**	1	WASHER (50.1X62X2.25-MM THK)	
B			**8U-6074**	1	WASHER (50.1X62X2.35-MM THK)	
B			**121-8118**	1	WASHER (50.1X62X2.4-MM THK)	
B			**121-8119**	1	WASHER (50.1X62X2.45-MM THK)	
B			**121-8120**	1	WASHER (50.1X62X2.5-MM THK)	
B			**121-8121**	1	WASHER (50.1X62X2.55-MM THK)	
B			**121-8122**	1	WASHER (50.1X62X2.6-MM THK)	
B			**121-8123**	1	WASHER (50.1X62X2.65-MM THK)	
B			**121-8126**	1	WASHER (50.1X62X2.85-MM THK)	
B			**153-4708**	1	WASHER (50.1X61.8X2.9-MM THK)	
B			**153-4709**	1	WASHER (50.1X61.8X2.93-MM THK)	
B			**153-4710**	1	WASHER (50.1X61.8X2.96-MM THK)	
B			**153-4711**	1	WASHER (50.1X61.8X2.99-MM THK)	
B			**153-4712**	1	WASHER (50.1X61.8X3.02-MM THK)	
B			**370-2927**	1	WASHER (50.1X61.8X1.95-MM THK)	

416-1916 **TRANSMISSION GP (**contd.**)** **i06023387**

NOTE	REF NO	GRAPHIC REF	PART NUMBER	QTY	PART NAME 1 2 3 4 5 6 (PRODUCT LEVEL)	SEE PAGE
B			**428-6882**	1	WASHER (50.1X61.8X2.03-MM THK)	
B			**428-6883**	1	WASHER (50.1X61.8X1.98-MM THK)	
B			**428-6884**	1	WASHER (50.1X61.8X1.93-MM THK)	
B			**428-6885**	1	WASHER (50.1X61.8X1.88-MM THK)	
B			**428-6886**	1	WASHER (50.1X61.8X1.85-MM THK)	
B			**428-6887**	1	WASHER (50.1X61.8X1.90-MM THK)	
	150	7	**5W-2795**	1	BEARING	
	151	7	**240-4131**	1	SEAL-LIP TYPE	
	152	7	**121-8116**	1	SEAL-O-RING	
	153	7	**8U-6065**	1	PLATE	
	154	7	**109-5700**	1	SEAL-O-RING	
	155	7	**233-8732**	1	GEAR	
	156	7	**238-4722**	1	PLATE	
	157	7	**237-7251**	8	STUD (M10X1-THD)	
	158	7	**375-4478**	1	PINION-GEAR	
					AVAILABLE REPAIR KIT(S):	
J			**311-1217**	1	KIT-REPAIR (GEAR PUMP)	
					(ALSO INCLUDES BOLTS)	

B - USE AS REQUIRED
J - KIT MARKED J SERVICES PART(S) MARKED J
M - METRIC PART

416-1916 **TRANSMISSION GP (**contd.**)** **i06023387**

REFER TO ALL ILLUSTRATIONS OF
THIS GROUP FOR AUXILIARY VIEWS

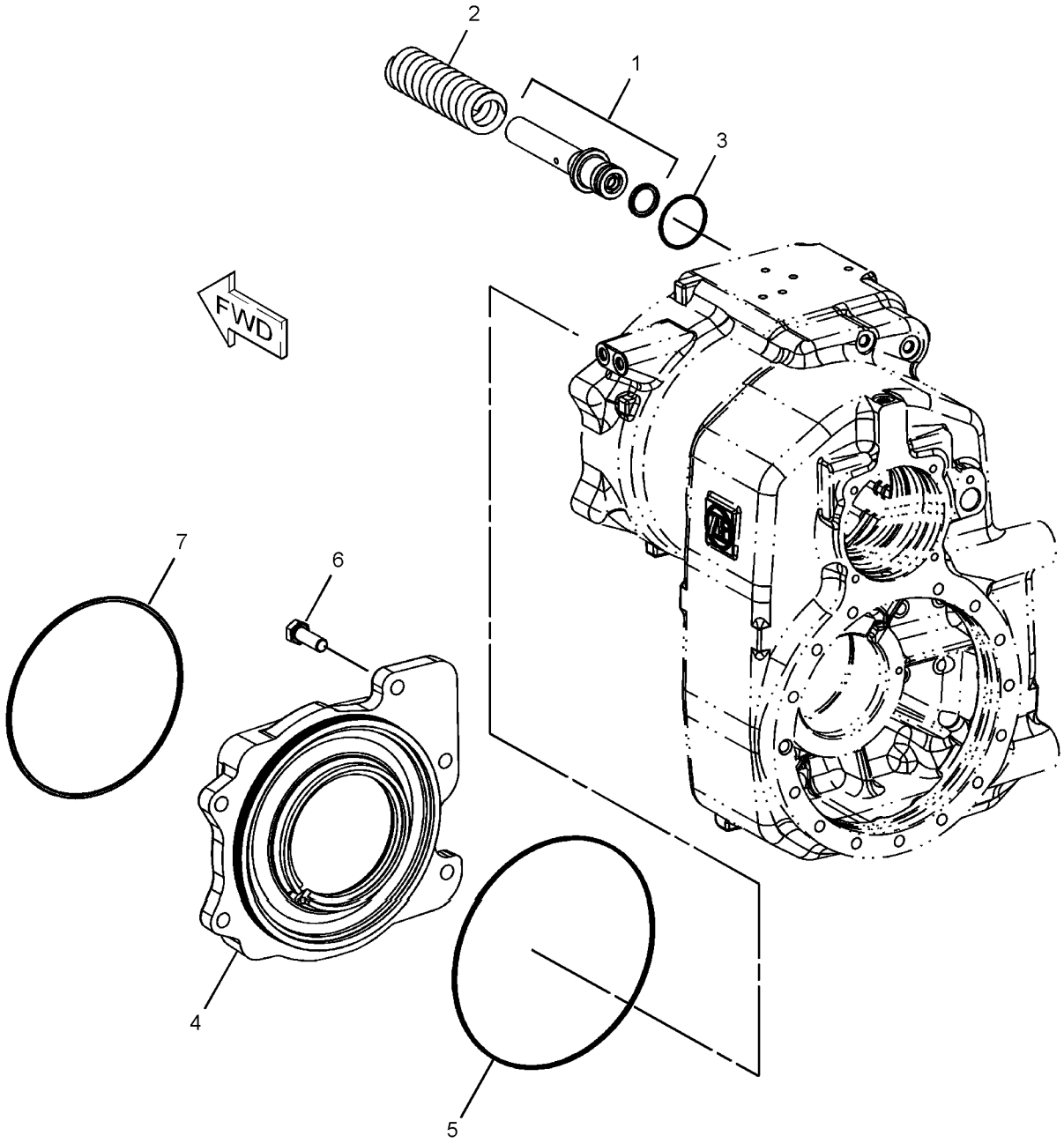

GRAPHIC #1 g03375885

416-1916 **TRANSMISSION GP (**contd.**)** **i06023387**

REFER TO ALL ILLUSTRATIONS OF
THIS GROUP FOR AUXILIARY VIEWS

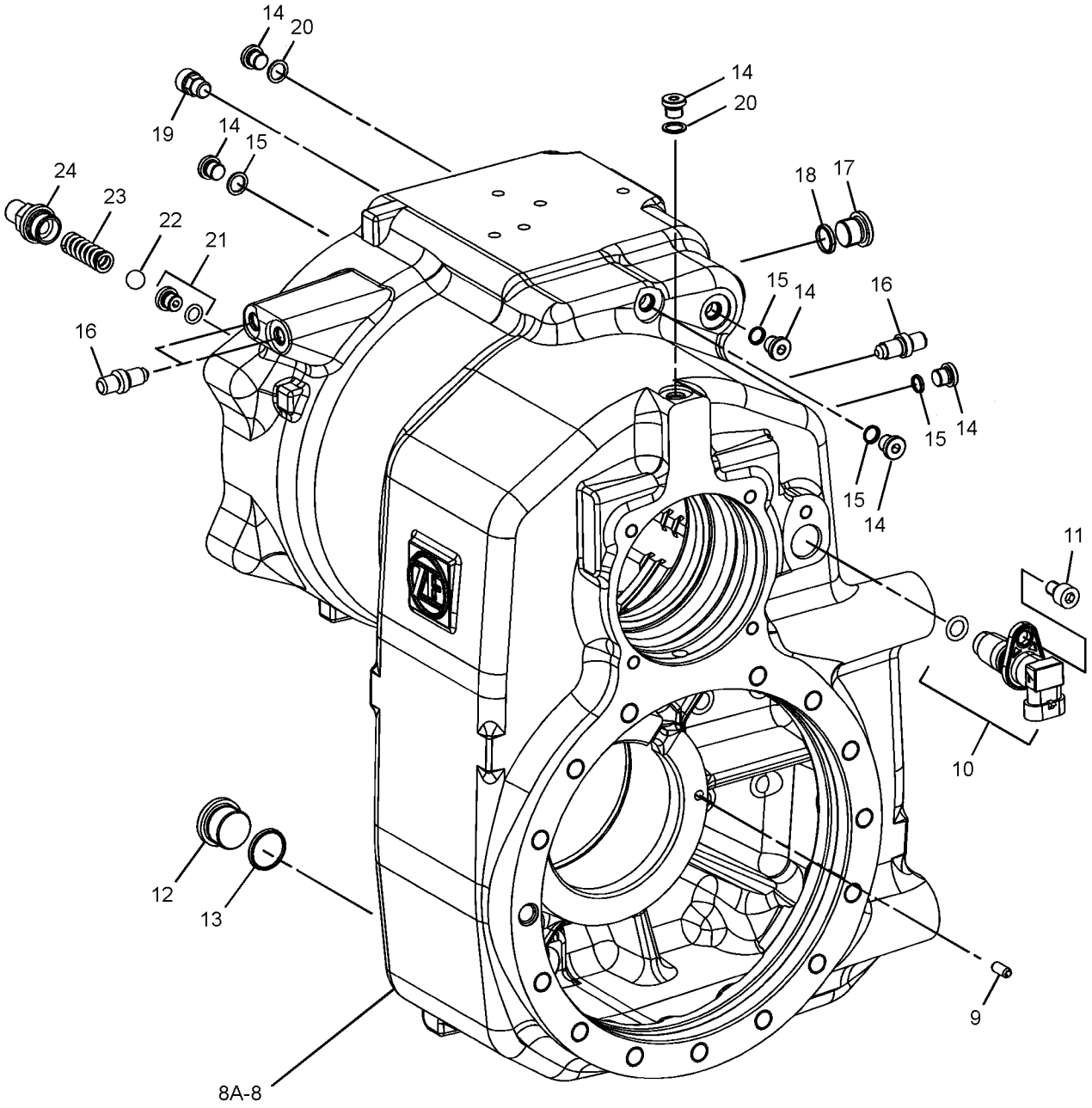

GRAPHIC #2 g03375886

416-1916 **TRANSMISSION GP (**contd.**)** **i06023387**

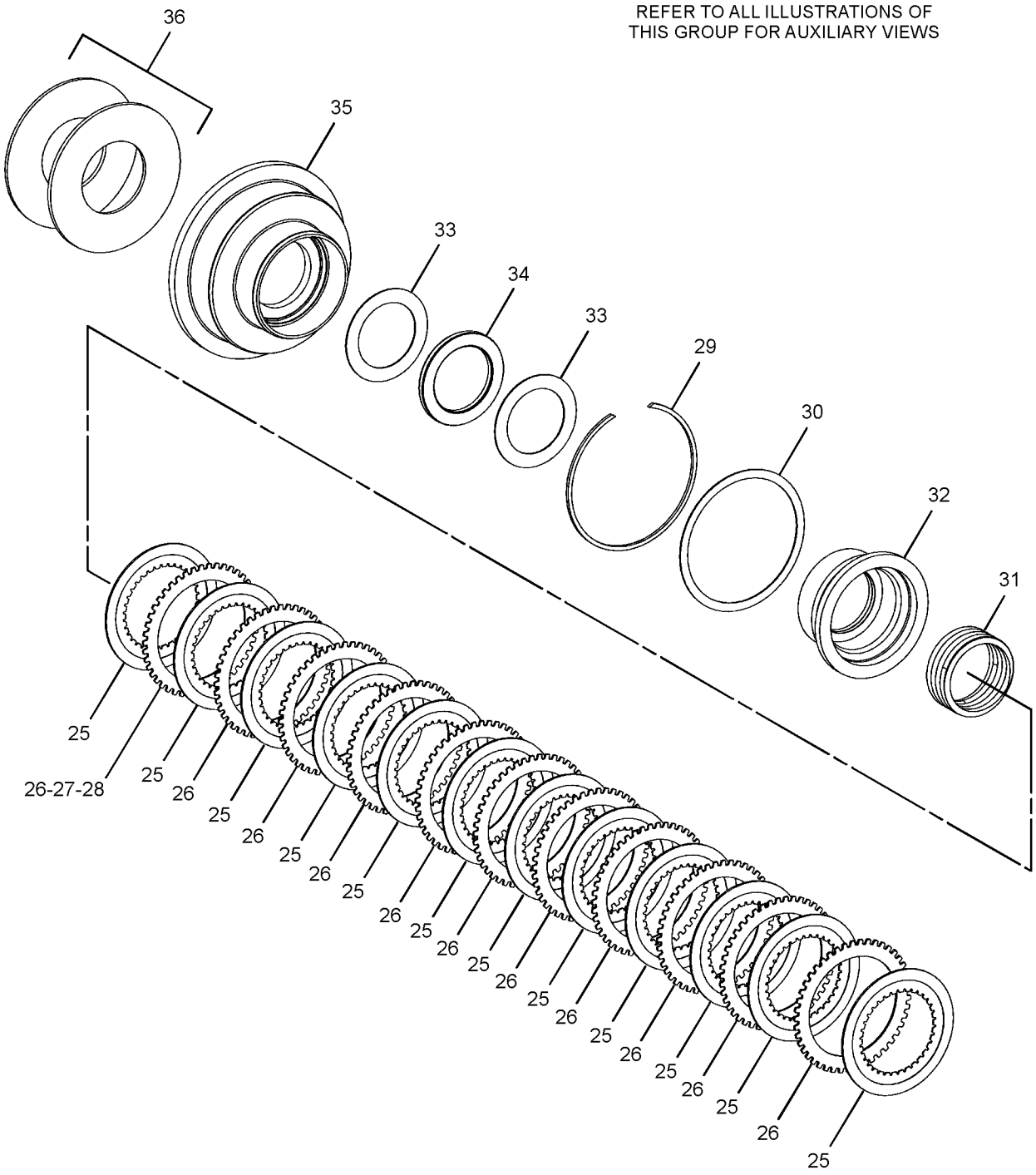

GRAPHIC #3 g03375887

416-1916 **TRANSMISSION GP (**contd.**)** **i06023387**

REFER TO ALL ILLUSTRATIONS OF
THIS GROUP FOR AUXILIARY VIEWS

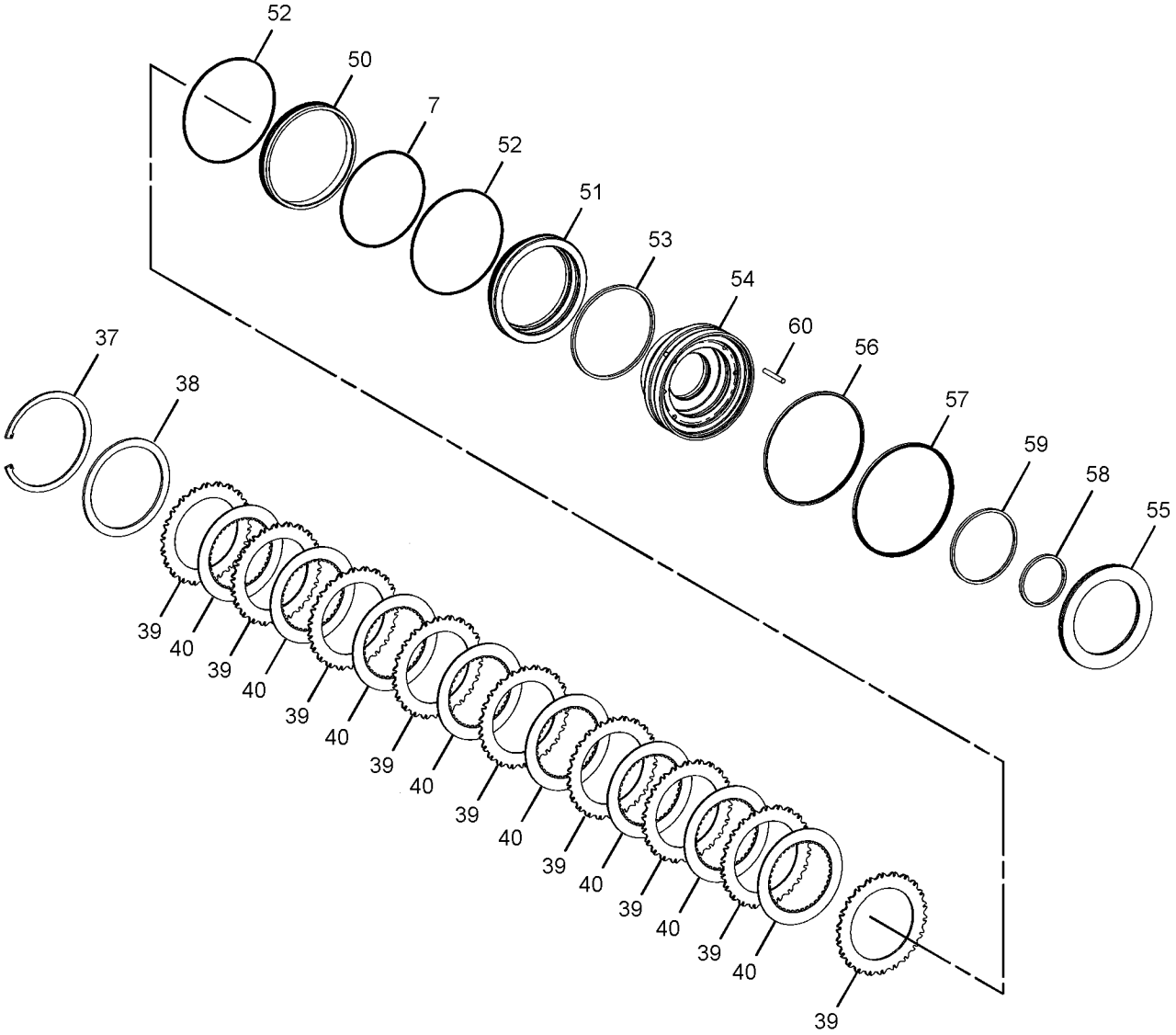

GRAPHIC #4 g03375888

416-1916 **TRANSMISSION GP** (contd.) **i06023387**

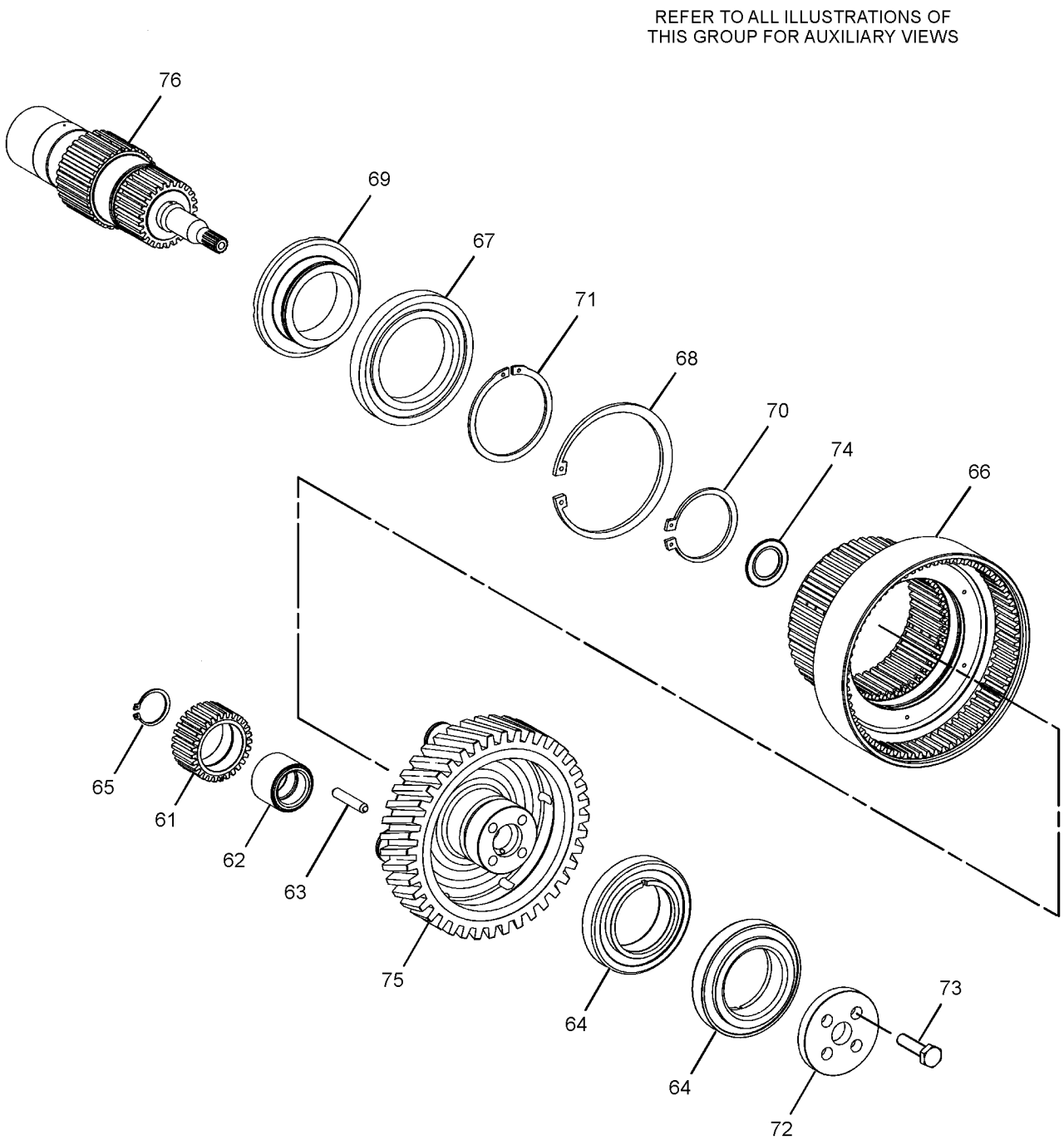

GRAPHIC #5 g03375889

416-1916 **TRANSMISSION GP** (contd.) **i06023387**

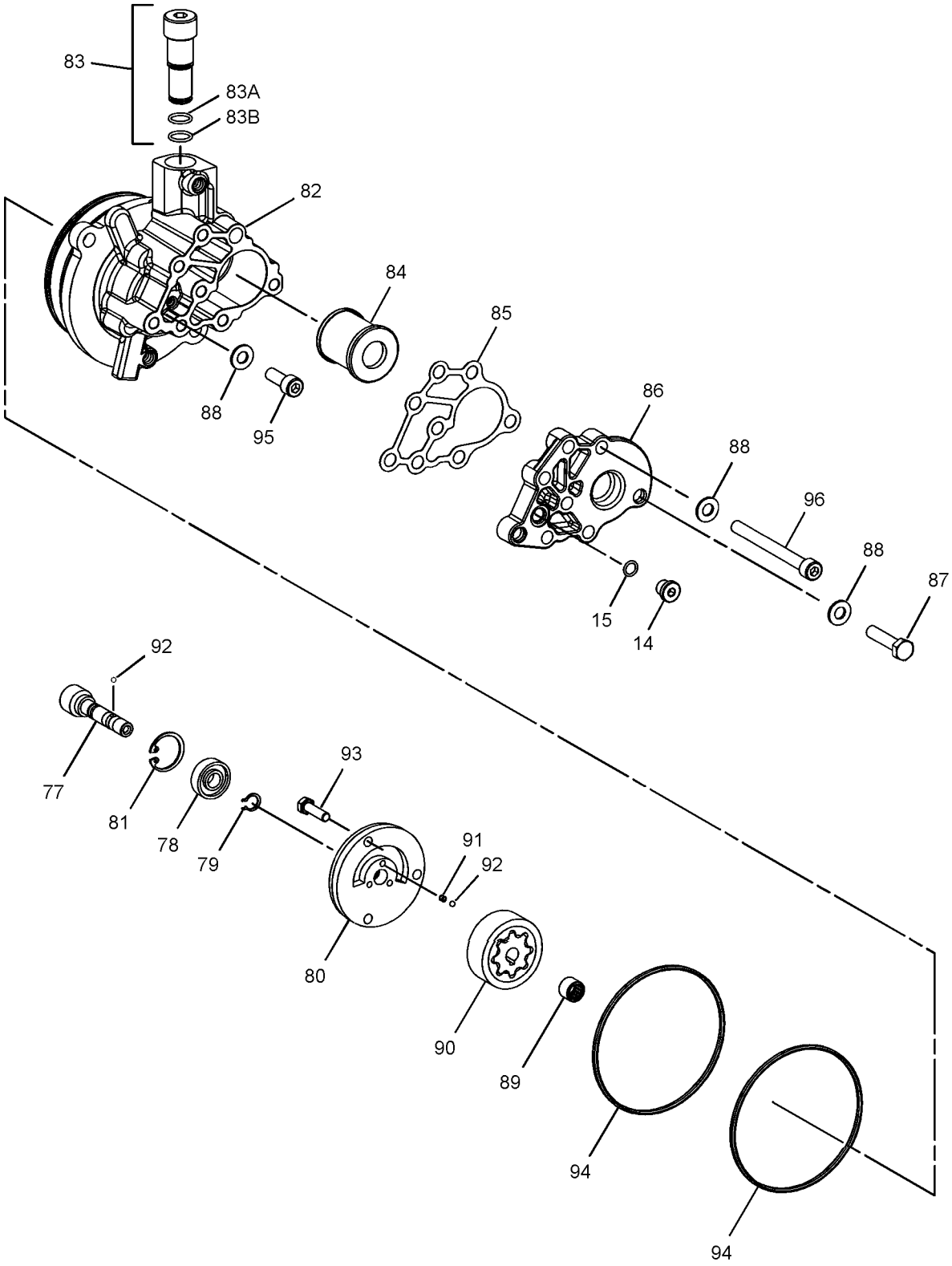

GRAPHIC #6 g03375890

416-1916 **TRANSMISSION GP (**contd.**)** **i06023387**

REFER TO ALL ILLUSTRATIONS OF
THIS GROUP FOR AUXILIARY VIEWS

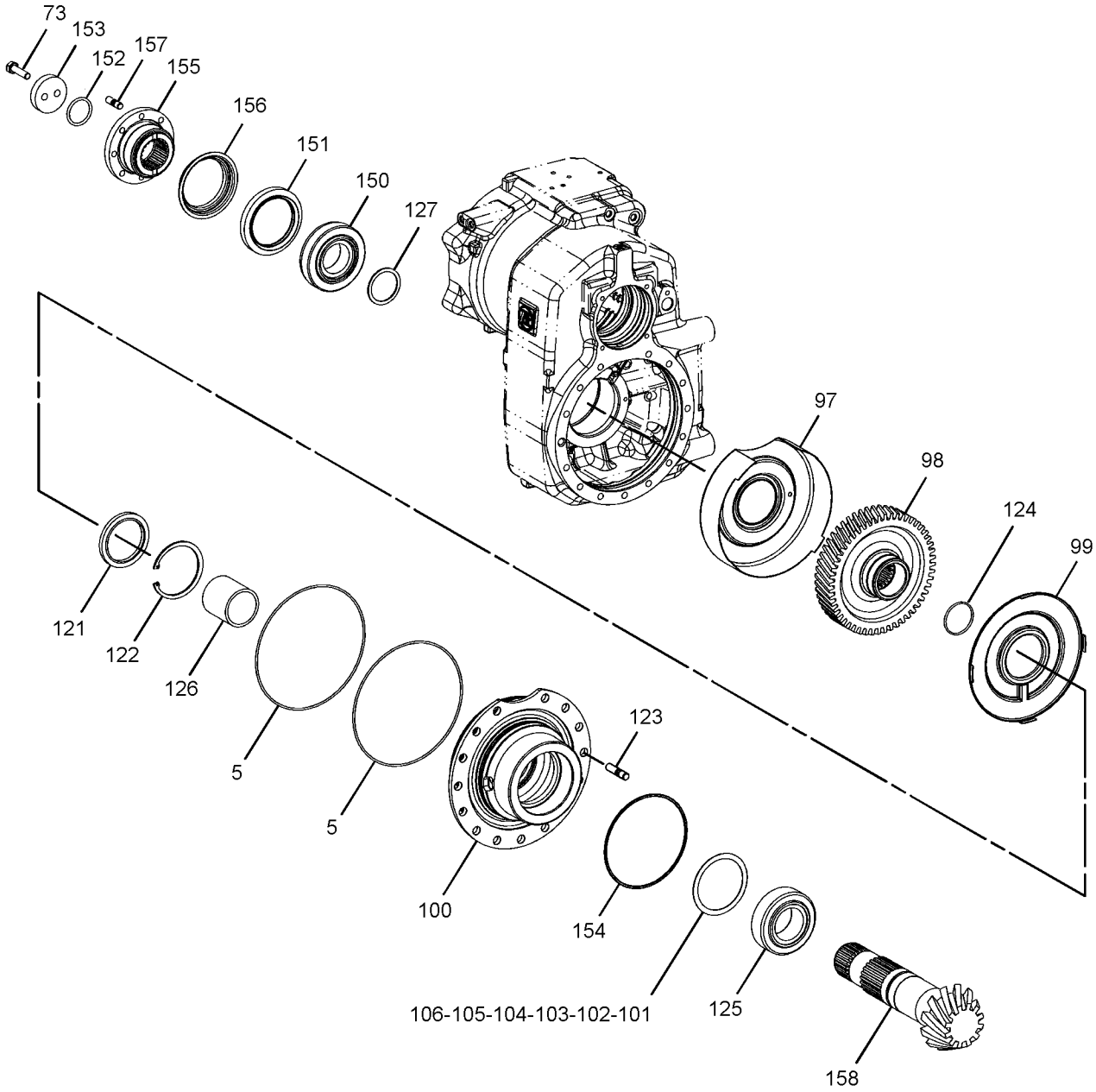

GRAPHIC #7 <END> g03375891

355-4815 UNIVERSAL JOINT GP

S/N: CH91-UP
PART OF 228-3839 SHAFT GP-DRIVE
ALSO AN ATTACHMENT

SMCS-3251, 3253 **i05558334**

NOTE	REF NO	GRAPHIC REF	PART NUMBER	QTY	PART NAME 1 2 3 4 5 6 (PRODUCT LEVEL)	SEE PAGE
	1	1	**199-4128**	2	SPIDER & BEARING AS	
					(EACH INCLUDES)	
		1	**5W-7258**	1	FITTING-GREASE	

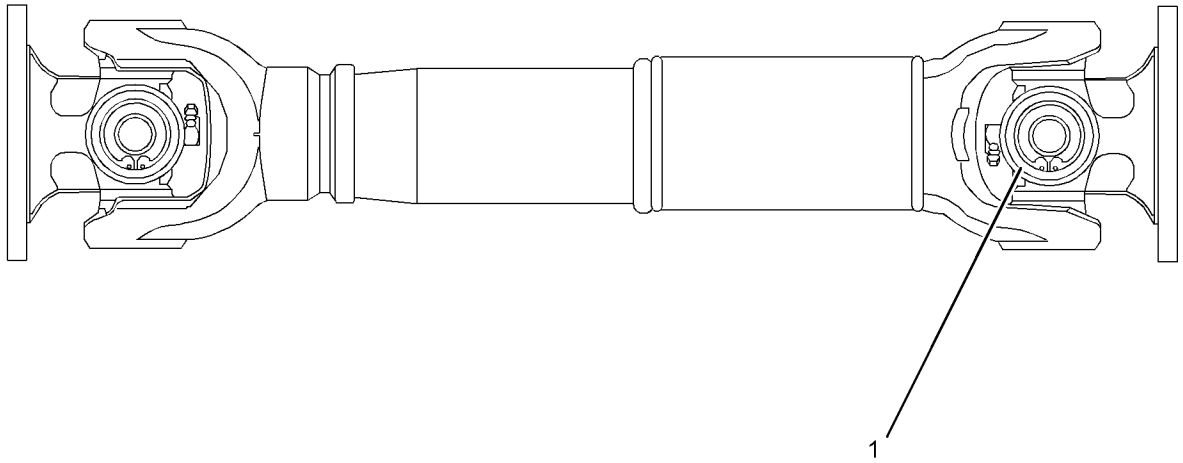

GRAPHIC #1 <END> g02418876

355-4816 UNIVERSAL JOINT GP

S/N: CH91-UP
PART OF 228-3839 SHAFT GP-DRIVE
ALSO AN ATTACHMENT

SMCS-3251, 3253 **i05970874**

NOTE	REF NO	GRAPHIC REF	PART NUMBER	QTY	PART NAME 1 2 3 4 5 6 (PRODUCT LEVEL)	SEE PAGE
	1	1	**199-4128**	2	SPIDER & BEARING AS	
					(EACH INCLUDES)	
		1	**5W-7258**	1	FITTING-GREASE	

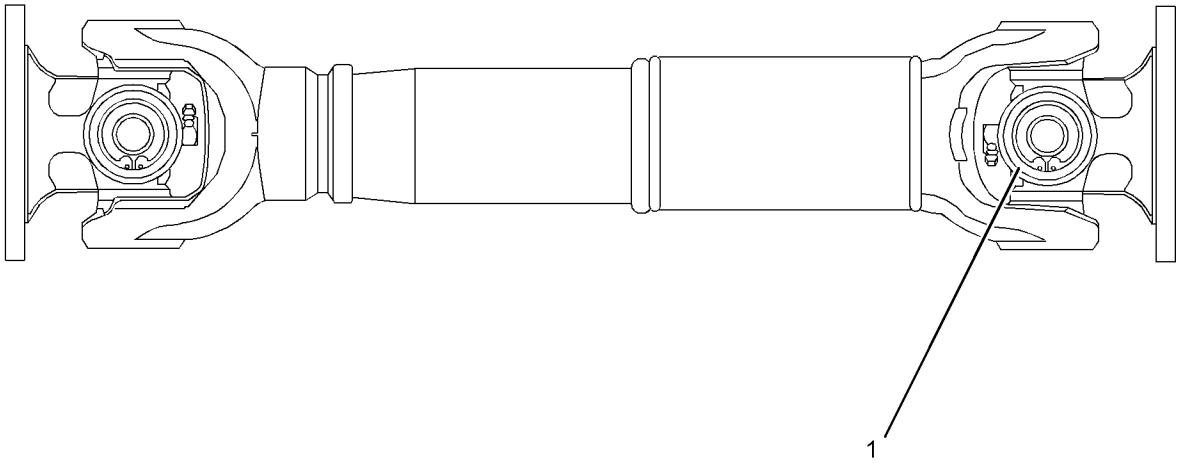

GRAPHIC #1 <END> g02418876

278-6963 BRACKET GP-SUPPORT—ENGINE COMPARTMENT DOOR LATCH

S/N: CH91-UP
PART OF 454-3396 ENCLOSURE GP-ENGINE
ALSO AN ATTACHMENT

SMCS-7273 **i05946759**

NOTE	REF NO	GRAPHIC REF	PART NUMBER	QTY	PART NAME 1 2 3 4 5 6 (PRODUCT LEVEL)	SEE PAGE
	1	1	**195-9396**	1	ANGLE	
	2	1	**195-9397**	1	PLATE	
M	3	1	**131-6454**	2	SCREW-FLAT HEAD (M8X1.25X25-MM)	
M	4	1	**5C-7261**	2	NUT (M8X1.25-THD)	
	5	1	**5P-4116**	2	WASHER-HARD (8.8X20.5X2-MM THK)	

M - METRIC PART

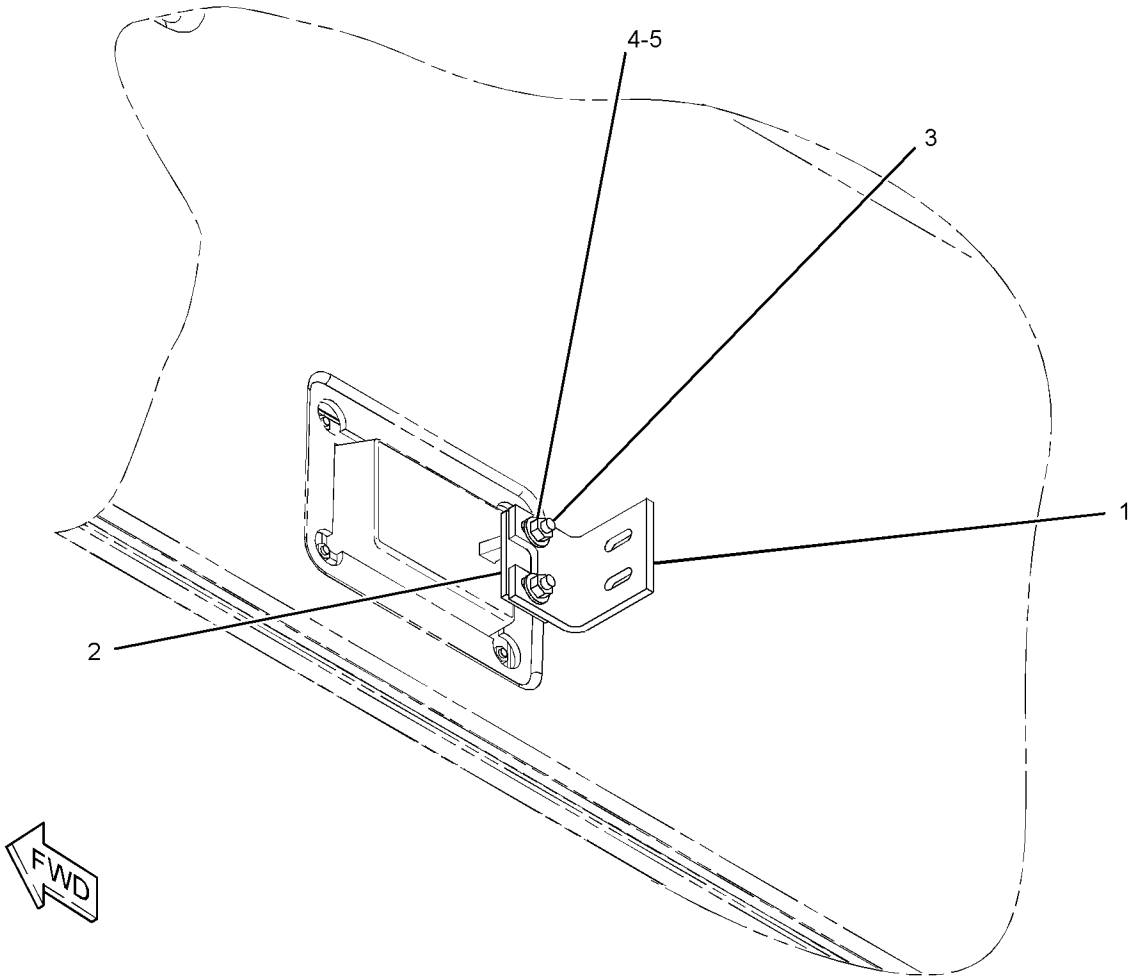

GRAPHIC #1 <END> g01321246

252-9836 COUNTERWEIGHT GP

S/N: CH91-UP

PART OF 453-8185, 473-2841, 517-3262 DISTRIBUTION AR

AN ATTACHMENT

SMCS-7056 **i06017454**

NOTE	REF NO	GRAPHIC REF	PART NUMBER	QTY	PART NAME 1 2 3 4 5 6 (PRODUCT LEVEL)	SEE PAGE
	1	1	**112-9837**	3	WASHER (31X68X10-MM THK)	
	2	1	**140-6312**	1	SPACER (31X80X50-MM THK)	
B	3	1	**259-6764**	15	PLATE	
	4	1	**321-8794**	1	COUNTERWEIGHT AS	
M	5	1	**304-7356**	3	BOLT (M30X3.5X210-MM)	

B - USE AS REQUIRED
M - METRIC PART

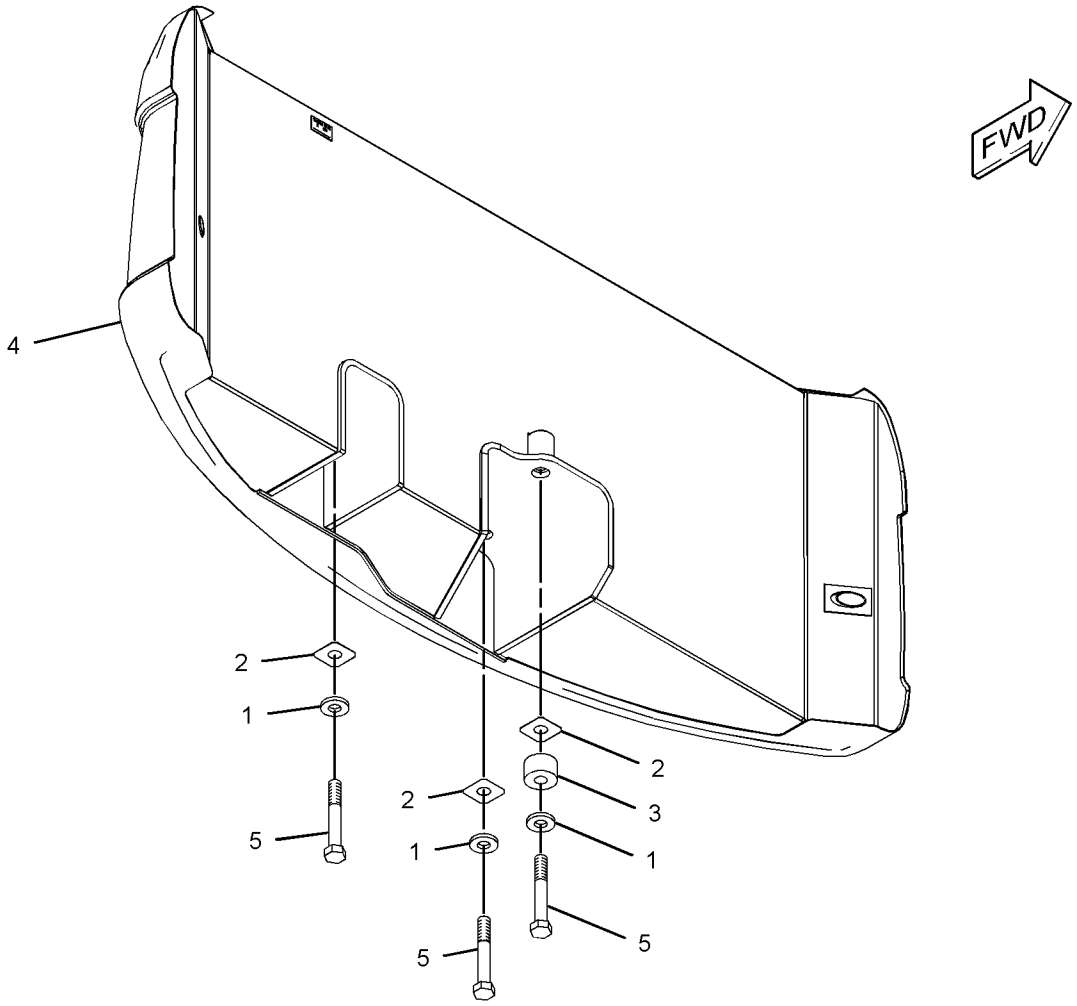

GRAPHIC #1 <END> g01318752

273-4835 DOOR GP-ACCESS—PILOT MANIFOLD

S/N: CH91-UP
PART OF 454-3395 HOOD & GUARD AR
ALSO AN ATTACHMENT

SMCS-7273 **i05558139**

NOTE	REF NO	GRAPHIC REF	PART NUMBER	QTY	PART NAME 1 2 3 4 5 6 (PRODUCT LEVEL)	SEE PAGE
B	1	1	**201-3088**	2	SHIM (1-MM THK)	
Y	2	1	*321-8732*	1	DOOR GP-ACCESS	281
	3	1	**5P-4116**	4	WASHER-HARD (8.8X20.5X2-MM THK)	
M	4	1	**8T-4189**	4	BOLT (M8X1.25X20-MM)	

B - USE AS REQUIRED
M - METRIC PART
Y - SEPARATE ILLUSTRATION

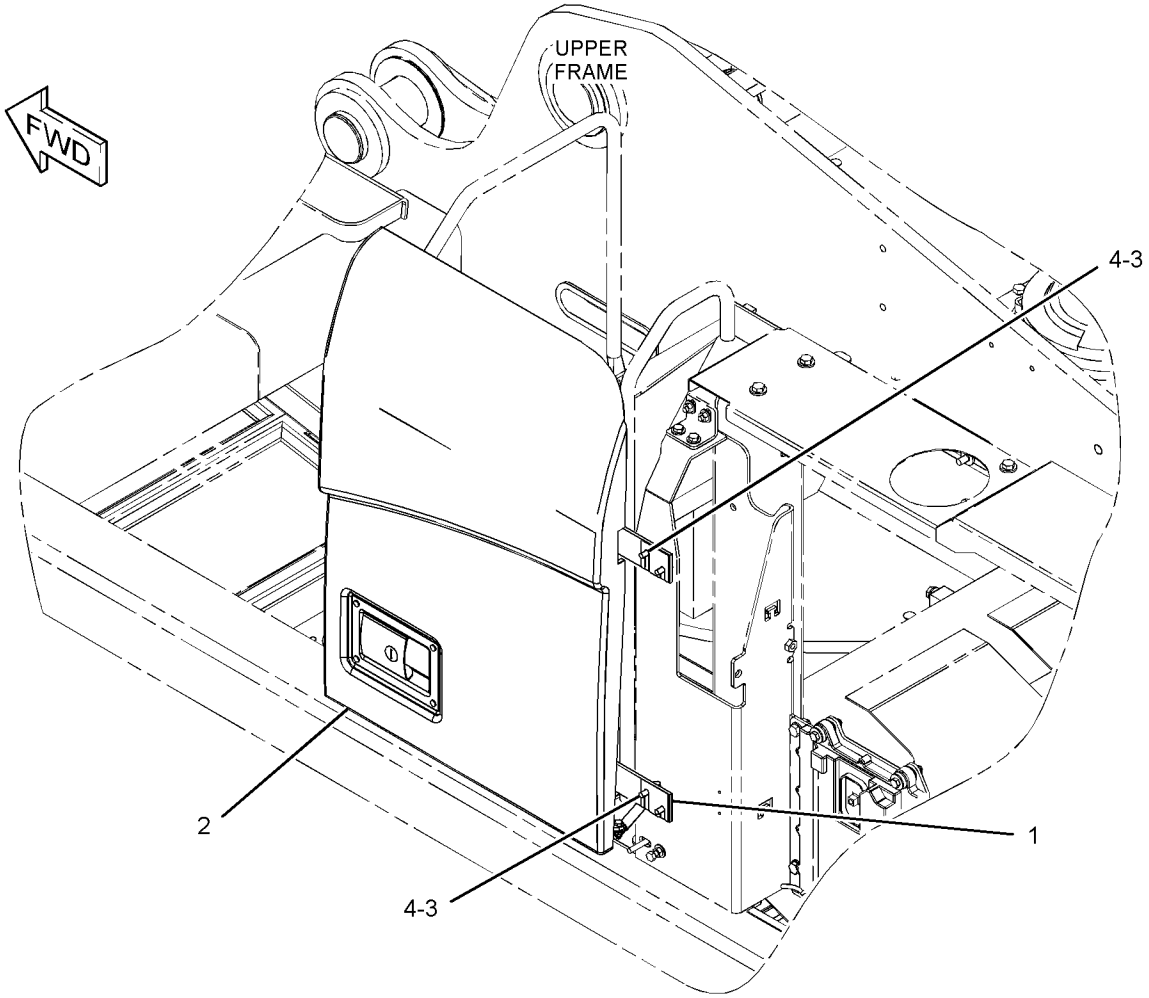

GRAPHIC #1 <END> g01321304

310-3130 DOOR GP-ACCESS—ENGINE

S/N: CH91-UP
PART OF 454-3396 ENCLOSURE GP-ENGINE
ALSO AN ATTACHMENT

SMCS-7273 **i05970839**

NOTE	REF NO	GRAPHIC REF	PART NUMBER	QTY	PART NAME 1 2 3 4 5 6 (PRODUCT LEVEL)	SEE PAGE
	1	1	**116-6325**	2	SPRING-GAS	
	3	1	**206-3623**	1	HANDLE AS	
	4	1	**206-9348**	1	LATCH AS	
	5	1	**254-9404**	1	SUPPORT AS	
	6	1	**254-9409**	1	DOOR AS-ACCESS	
	6A	1	**254-9405**	2	HINGE AS	
	7	1	**256-6420**	1	INSULATION	
J	8	1	**362-3495**	1	LATCH AS-HANDLE	
	9	1	**278-6964**	1	SPRING-GAS	
	10	1	**305-3606**	1	COVER AS	
	10A	1	**254-9405**	2	HINGE AS	
	11	1	**305-3615**	1	ROD	
M	12	1	**131-3539**	2	SCREW-FLAT HEAD (M8X1.25X30-MM)	
M	13	1	**159-3046**	4	BOLT (M8X1.25X20-MM)	
	14	1	**244-2422**	1	INSULATION	
M	15	1	**5C-2874**	1	NUT (M5X0.8-THD)	
M	16	1	**5C-2890**	4	NUT (M6X1-THD)	
M	17	1	**5C-7261**	5	NUT (M8X1.25-THD)	
	18	1	**5P-4116**	8	WASHER-HARD (8.8X20.5X2-MM THK)	
M	19	1	**8T-4171**	2	BOLT (M6X1X12-MM)	
M	20	1	**8T-4189**	4	BOLT (M8X1.25X20-MM)	
	21	1	**8T-4224**	5	WASHER-HARD (8.8X16X2-MM THK)	
	22	1	**9X-8256**	6	WASHER (6.6X12X2-MM THK)	
E	23	1	**126-5648**		SEAL (69-CM)	
E	24	1	**310-3137**		SEAL (191-CM)	

E - ORDER BY THE CENTIMETER
J - REQUIRES CORPORATE KEY
M - METRIC PART

310-3130 **DOOR GP-ACCESS** (contd.) **i05970839**

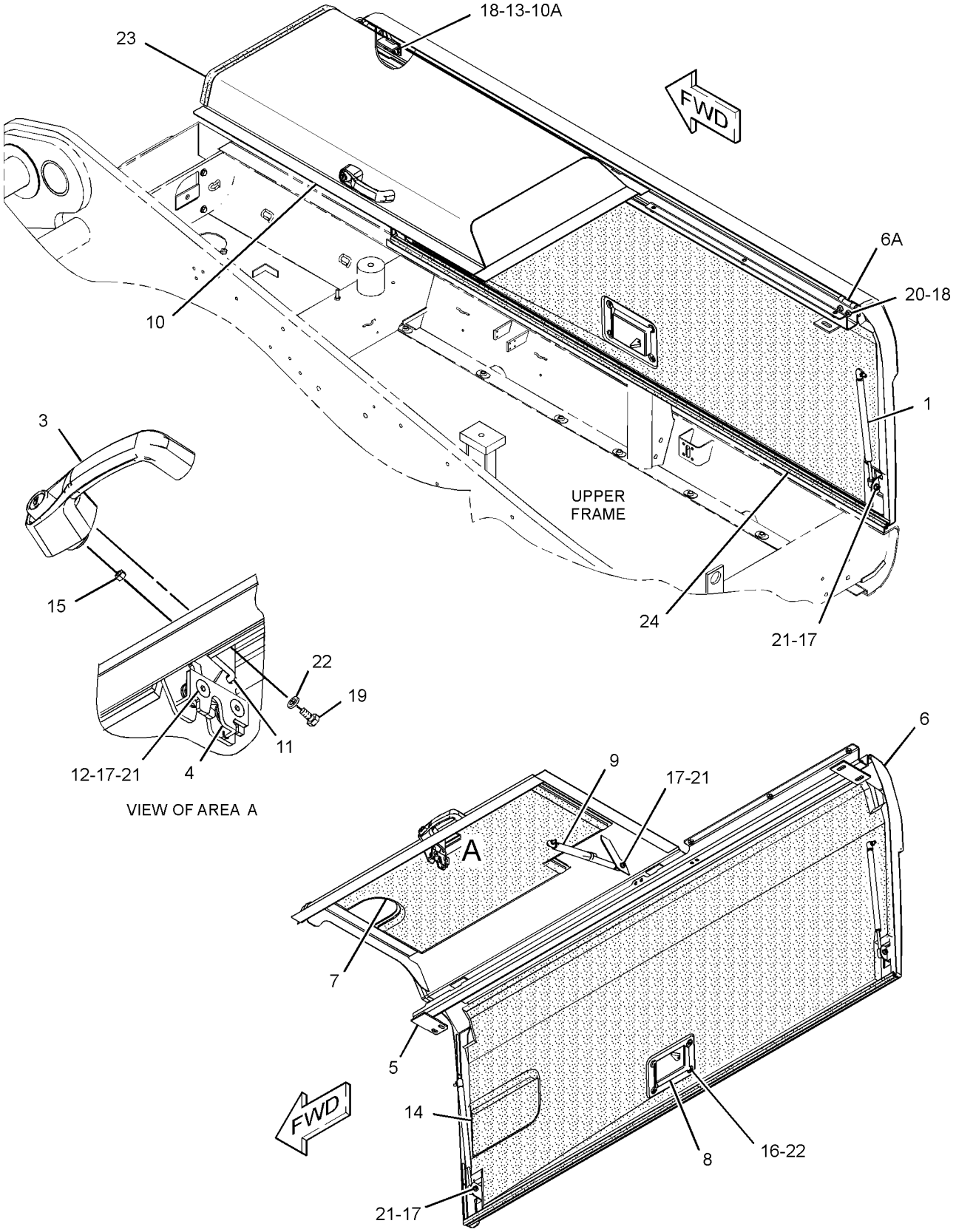

GRAPHIC #1 <END> g02416716

321-8732 DOOR GP-ACCESS—PILOT MANIFOLD

S/N: CH91-UP
PART OF 273-4835 DOOR GP-ACCESS
ALSO AN ATTACHMENT

SMCS-7273 **i05496669**

NOTE	REF NO	GRAPHIC REF	PART NUMBER	QTY	PART NAME 1 2 3 4 5 6 (PRODUCT LEVEL)	SEE PAGE
	1	1	**100-7740**	2	RING-RETAINING	
	2	1	**203-4464**	2	MOUNT-RESILIENT	
	3	1	**215-9415**	2	PIN	
	4	1	**259-2355**	2	HINGE AS	
	5	1	**259-2385**	1	SPRING-GAS	
J	6	1	**298-2942**	1	LATCH AS	
	7	1	**321-8731**	1	DOOR AS-ACCESS	
		1	**196-5693**	2	HINGE AS	
M	8	1	**129-3178**	1	LOCKNUT (M6X1-THD)	
M	9	1	**5C-2890**	8	NUT (M6X1-THD)	
M	10	1	**6V-7357**	1	BOLT (M6X1X25-MM)	
M	11	1	**8T-4138**	1	BOLT (M6X1X20-MM)	
	12	1	**9X-8256**	4	WASHER (6.6X12X2-MM THK)	

J - REQUIRES CORPORATE KEY
M - METRIC PART

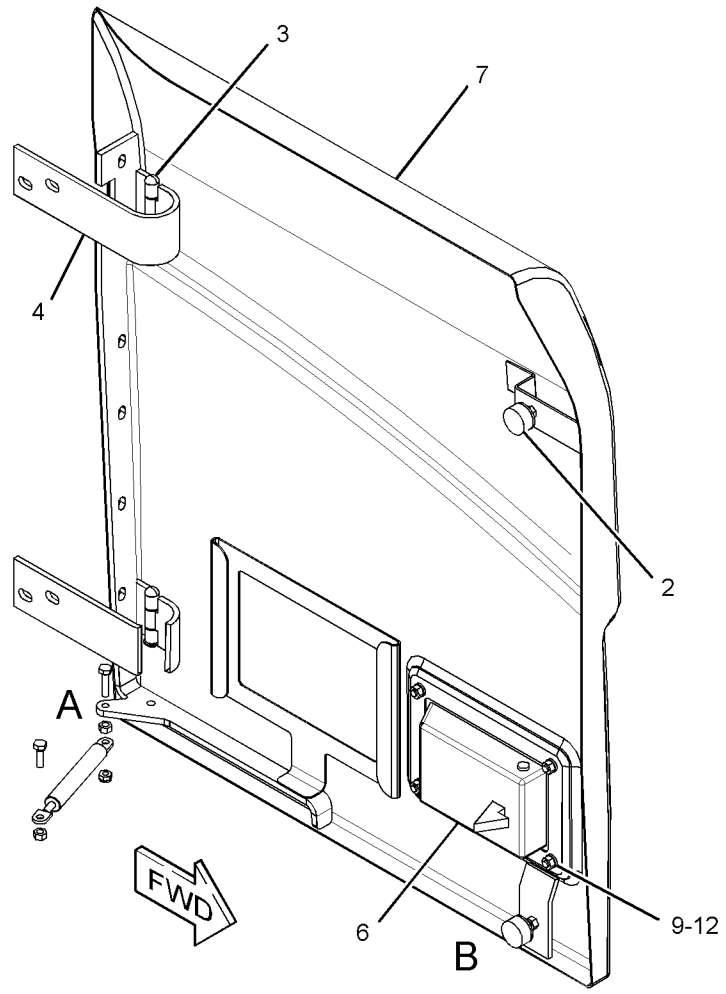

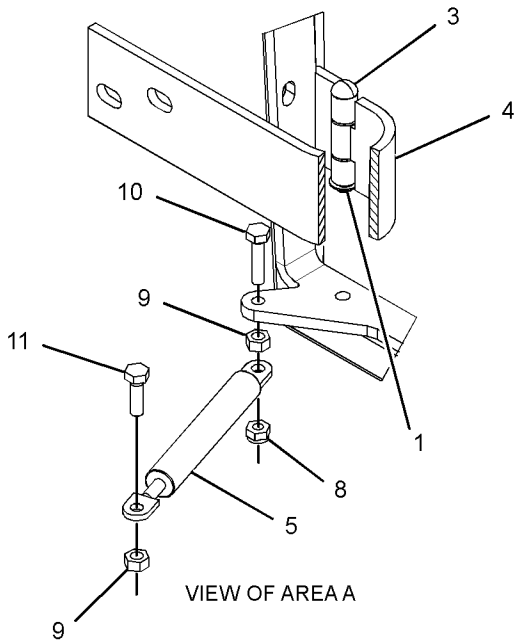

VIEW OF AREA A

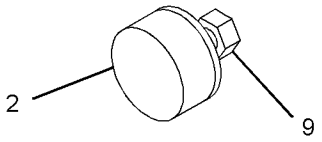

VIEW OF AREA B

GRAPHIC #1 <END> g02028815

454-3396 ENCLOSURE GP-ENGINE

S/N: CH91-UP
PART OF 454-3395 HOOD & GUARD AR
ALSO AN ATTACHMENT

SMCS-7263 **i06134824**

NOTE	REF NO	GRAPHIC REF	PART NUMBER	QTY	PART NAME 1 2 3 4 5 6 (PRODUCT LEVEL)	SEE PAGE
	1	1	**5Y-2425**	4	WASHER (6.5X17.5X1.5-MM THK)	
B	2	1	**123-5102**	2	SHIM (2-MM THK)	
	3	1	**206-9348**	1	LATCH AS	
B	4	1	**244-2418**	1	SHIM (4-MM THK)	
	5	1	**252-9846**	1	BRACKET	
	6	1	**254-9393**	1	SUPPORT AS	
	7	1	**254-9394**	1	SHEET	
	8	1	**254-9395**	1	PLATE	
	9	1	**254-9397**	1	BRACKET AS	
M		1	**159-9540**	2	NUT-WELD (M8X1.25-THD)	
	10	1	**254-9399**	1	PLATE	
	11	1	**254-9413**	1	ANGLE	
	12	1	**256-6392**	1	PLATE	
Y	13	1	*278-6963*	1	BRACKET GP-SUPPORT (ENGINE COMPARTMENT DOOR LATCH)	276
B	14	1	**278-6967**	4	SHIM (4-MM THK)	
B	15	1	**278-6968**	1	SHIM (2-MM THK)	
	16	1	**285-3468**	1	SUPPORT AS	
Y	17	1	*473-4932*	1	PANEL GP-SOUND SUPPRESSION	309
Y	18	1	*305-3612*	1	PANEL GP-SOUND SUPPRESSION	308
Y	19	1	*310-3130*	1	DOOR GP-ACCESS	279
Y	20	1	**372-5012**	1	CONTROL GP-HANDLE (HOOD RELEASE)	822
Y	21	1	*449-3653*	1	ENCLOSURE GP-RADIATOR	287
M	22	1	**092-5524**	1	BOLT (M12X1.75X80-MM)	
M	23	1	**131-3539**	2	SCREW-FLAT HEAD (M8X1.25X30-MM)	
M	24	1	**5C-7261**	8	NUT (M8X1.25-THD)	
	25	1	**5P-1076**	7	WASHER-HARD (13.5X30X4-MM THK)	
	26	1	**5P-4116**	18	WASHER-HARD (8.8X20.5X2-MM THK)	
	27	1	**7X-7729**	12	WASHER (11X25X3-MM THK)	
M	28	1	**8T-4133**	3	NUT (M10X1.5-THD)	
M	29	1	**8T-4136**	5	BOLT (M10X1.5X25-MM)	
M	30	1	**8T-4171**	4	BOLT (M6X1X12-MM)	
M	31	1	**8T-4189**	15	BOLT (M8X1.25X20-MM)	
M	32	1	**8T-4192**	8	BOLT (M12X1.75X25-MM)	
M	33	1	**8T-4196**	4	BOLT (M10X1.5X35-MM)	
	34	1	**8T-4223**	9	WASHER-HARD (13.5X25.5X3-MM THK)	
	35	1	**8T-4224**	4	WASHER-HARD (8.8X16X2-MM THK)	
M	36	1	**8T-4244**	5	NUT (M12X1.75-THD)	
M	37	1	**8T-4908**	1	BOLT (M8X1.25X25-MM)	
M	38	1	**8T-4956**	2	BOLT (M12X1.75X35-MM)	
E	39	1	**217-3403**		SEAL (14-CM)	
E	40	1	**128-8364**		SEAL (28-CM)	
E	40A	1	**128-8364**		SEAL (20-CM)	
E	41	1	**310-3126**		SEAL (79-CM)	
E	42	1	**117-0125**		SEAL (95-CM)	

454-3396 **ENCLOSURE GP-ENGINE (**contd.**)** **i06134824**

NOTE	REF NO	GRAPHIC REF	PART NUMBER	QTY	PART NAME 1 2 3 4 5 6 (PRODUCT LEVEL)	SEE PAGE

B - USE AS REQUIRED
E - ORDER BY THE CENTIMETER
M - METRIC PART
Y - SEPARATE ILLUSTRATION

454-3396 **ENCLOSURE GP-ENGINE** (contd.) **i06134824**

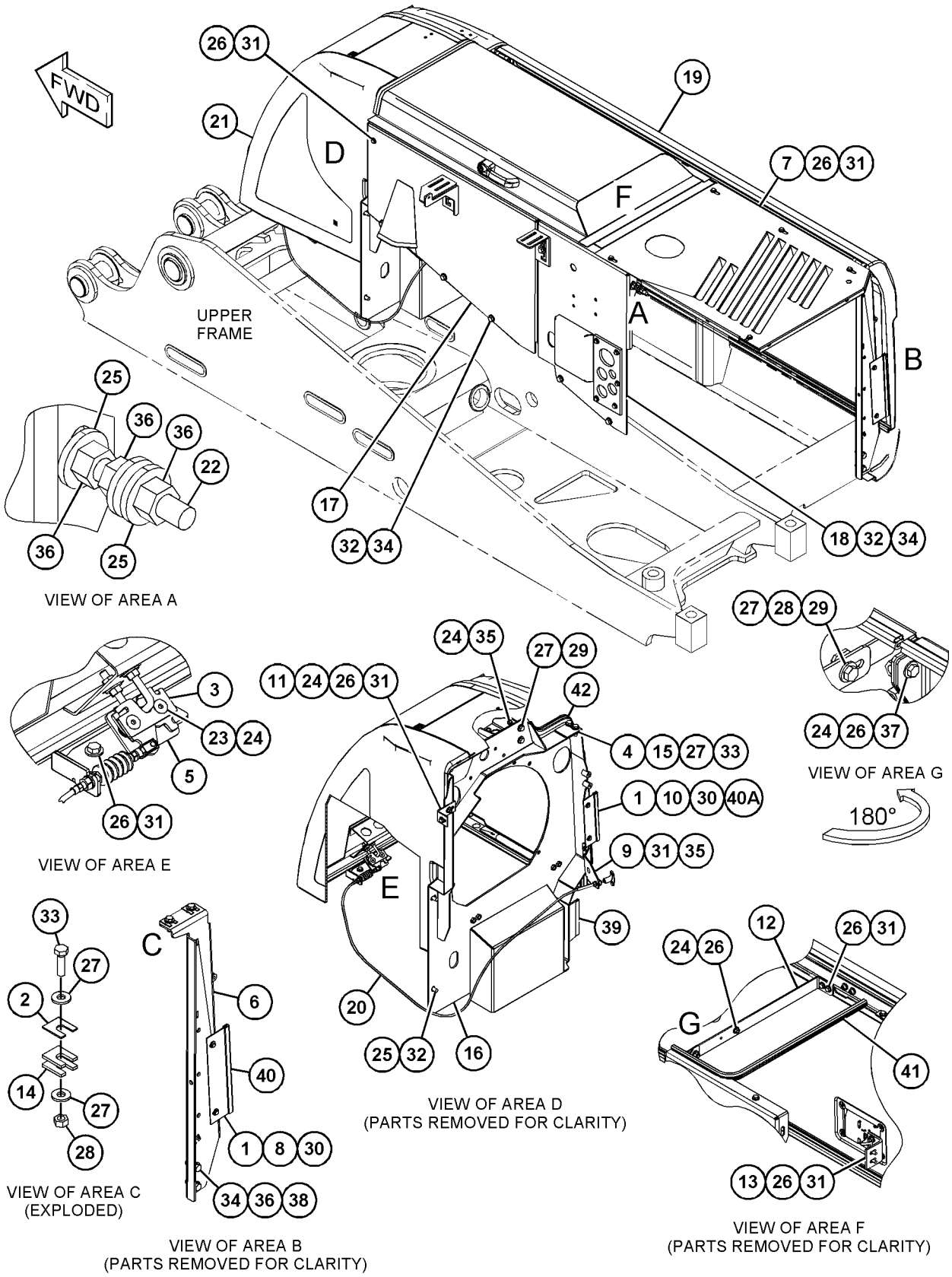

GRAPHIC #1 <END> g03744865

338-8347 ENCLOSURE GP-FUEL TANK

S/N: CH91-UP
PART OF 454-3395 HOOD & GUARD AR
ALSO AN ATTACHMENT

SMCS-7273, 7276 **i05946726**

NOTE	REF NO	GRAPHIC REF	PART NUMBER	QTY	PART NAME 1 2 3 4 5 6 (PRODUCT LEVEL)	SEE PAGE
	1	1	**259-6767**	1	PLATE	
	2	1	**259-6772**	1	PLATE	
	3	1	**259-6773**	1	SUPPORT AS	
	4	1	**263-9294**	1	PLUG	
Y	5	1	*276-5548*	1	SUPPORT GP-HOOD	314
M	6	1	**299-8919**	1	BOLT (M8X1.25X12-MM)	
	7	1	**321-8733**	1	DOOR AS (LH)	
M		1	**159-9540**	1	NUT-WELD (M8X1.25-THD)	
		1	**254-9405**	2	HINGE AS	
	8	1	**321-8803**	2	PLATE	
	9	1	**338-8346**	1	SUPPORT AS	
M		1	**8T-3490**	2	NUT-WELD (M10X1.5-THD)	
M		1	**8T-3612**	9	NUT-WELD (M8X1.25-THD)	
M		1	**091-4537**	1	BOSS-THREADED (M6X1X12-MM)	
M	10	1	**5C-7261**	3	NUT (M8X1.25-THD)	
	11	1	**5P-1076**	5	WASHER-HARD (13.5X30X4-MM THK)	
	12	1	**5P-4116**	11	WASHER-HARD (8.8X20.5X2-MM THK)	
	13	1	**7X-7729**	13	WASHER (11X25X3-MM THK)	
M	14	1	**8T-4136**	6	BOLT (M10X1.5X25-MM)	
M	15	1	**8T-4137**	7	BOLT (M10X1.5X20-MM)	
M	16	1	**8T-4139**	5	BOLT (M12X1.75X30-MM)	
M	17	1	**8T-4197**	2	BOLT (M8X1.25X40-MM)	
M	18	1	**8T-4908**	6	BOLT (M8X1.25X25-MM)	

M - METRIC PART
Y - SEPARATE ILLUSTRATION

338-8347 **ENCLOSURE GP-FUEL TANK (**contd.**)** **i05946726**

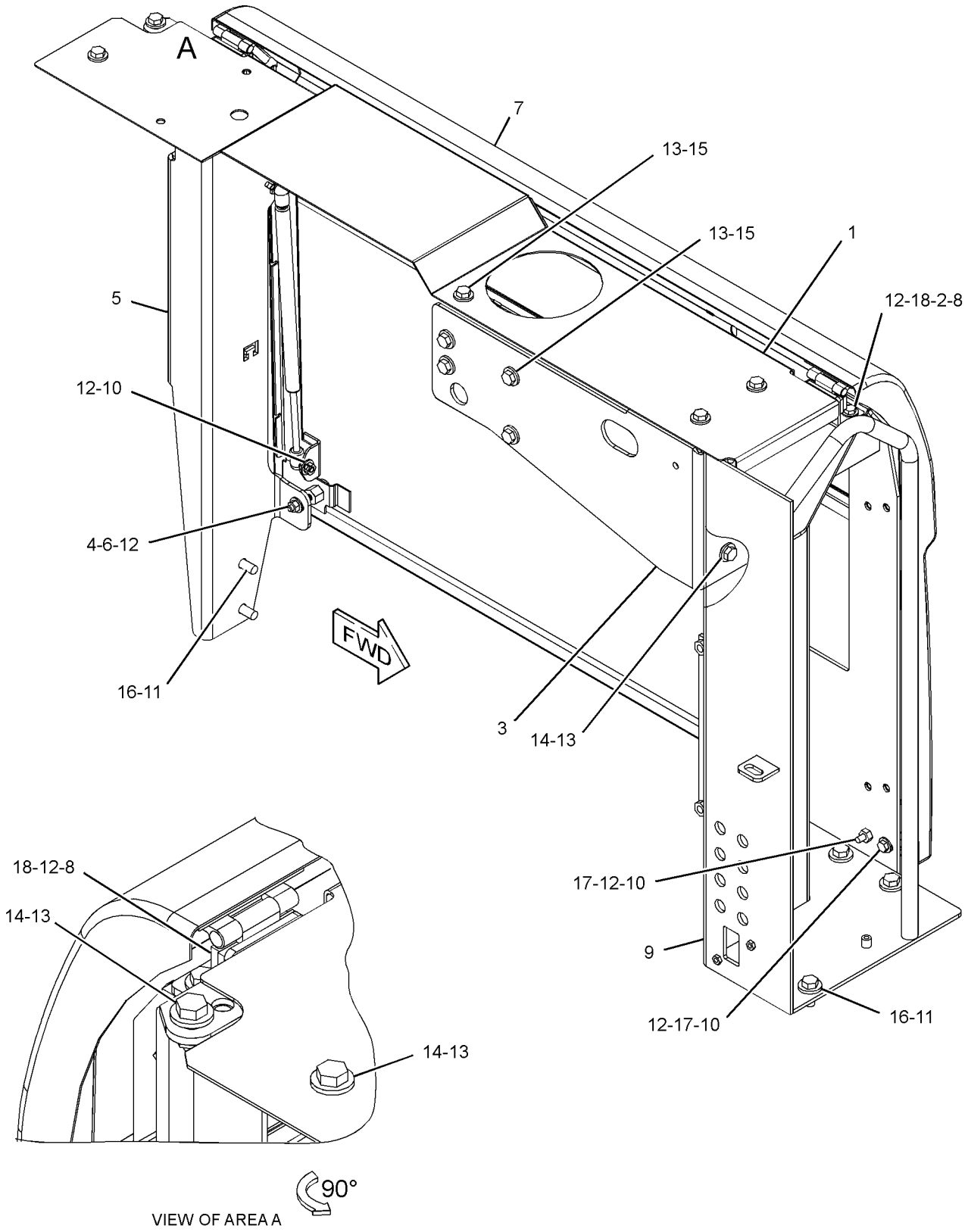

GRAPHIC #1 <END> g02420744

449-3653 ENCLOSURE GP-RADIATOR

S/N: CH91-UP
PART OF 454-3396 ENCLOSURE GP-ENGINE
ALSO AN ATTACHMENT

SMCS-7272 **i05522380**

NOTE	REF NO	GRAPHIC REF	PART NUMBER	QTY	PART NAME 1 2 3 4 5 6 (PRODUCT LEVEL)	SEE PAGE
	1	1	**196-9710**	2	HINGE AS	
	2	1	**196-9711**	2	PIN	
	3	1	**196-9720**	2	SPRING-GAS (HOOD)	
	4	1	**196-9728**	1	BRACKET	
	5	1	**206-9349**	1	ROD	
Y	6	1	*210-0603*	1	INSULATION GP-SOUND SUPPR	302
	7	1	**252-9841**	1	HOOD AS	
	8	1	**254-9414**	1	BRACKET	
	9	1	**100-7740**	2	RING-RETAINING	
M	10	1	**5C-7261**	14	NUT (M8X1.25-THD)	
	11	1	**5P-4116**	12	WASHER-HARD (8.8X20.5X2-MM THK)	
M	12	1	**7Y-6190**	4	BOLT (M8X1.25X20-MM)	
M	13	1	**8T-4189**	4	BOLT (M8X1.25X20-MM)	
	14	1	**8T-4224**	6	WASHER-HARD (8.8X16X2-MM THK)	
E	15	1	**296-1875**		SEAL (144-CM)	

E - ORDER BY THE CENTIMETER
M - METRIC PART
Y - SEPARATE ILLUSTRATION

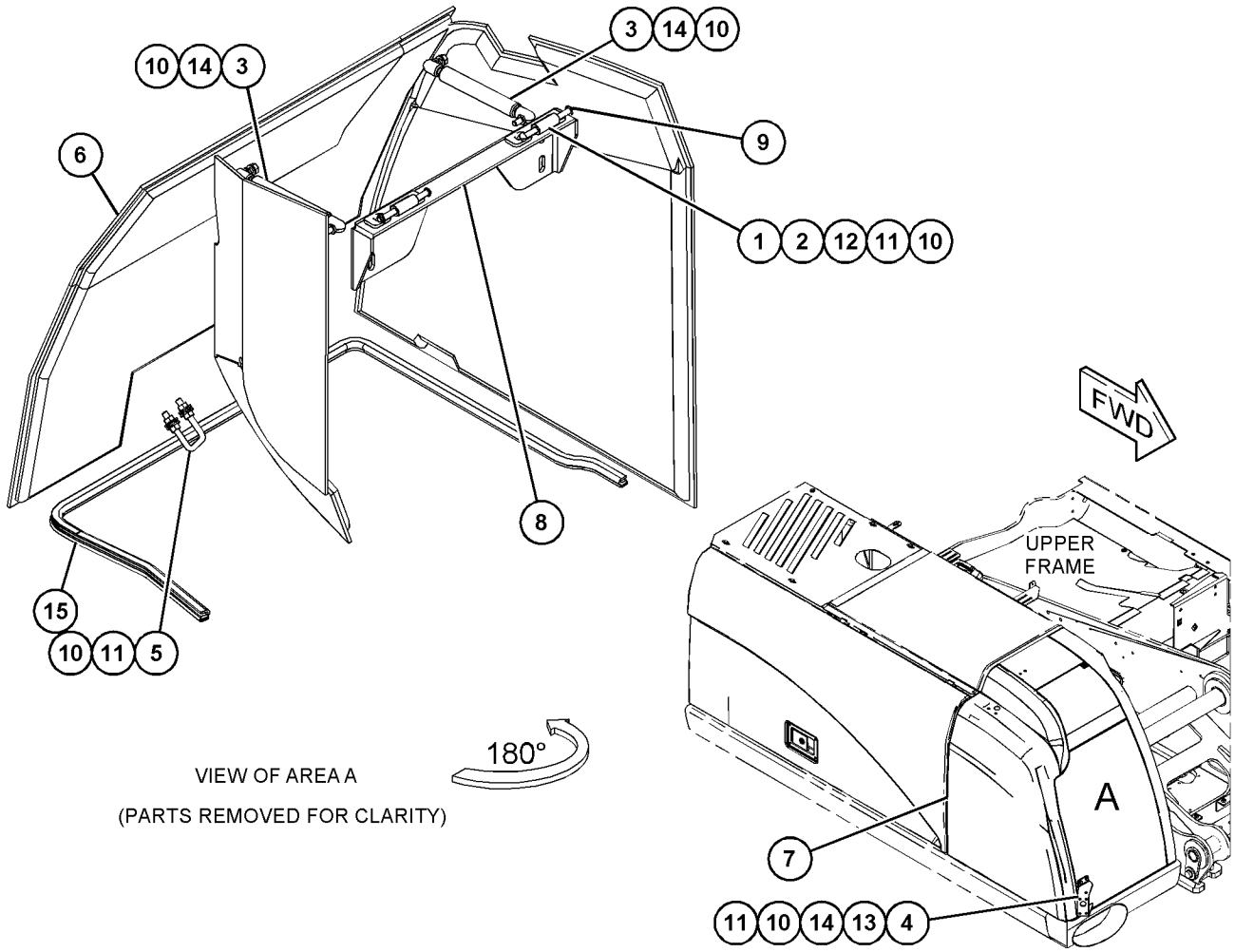

GRAPHIC #1 <END> g03501402

463-8753 FENDER GP

S/N: CH91-UP
PART OF 473-2841 DISTRIBUTION AR
AN ATTACHMENT

SMCS-7252 **i06068155**

NOTE	REF NO	GRAPHIC REF	PART NUMBER	QTY	PART NAME 1 2 3 4 5 6 (PRODUCT LEVEL)	SEE PAGE
	1	1	**389-2366**	2	PLATE	
	2	1	**461-3502**	2	PLATE	
	3	1	**461-3503**	2	PLATE	
	4	1	**461-3504**	2	PLATE	
	5	1	**463-8754**	1	FENDER AS (REAR, RH)	
	6	1	**463-8765**	1	FENDER AS (REAR, LH)	
	7	1	**463-8766**	1	FENDER AS (FRONT, RH)	
	8	1	**463-8767**	1	FENDER AS (FRONT, LH)	
	9	1	**473-0868**	8	PLATE	
	10	1	**5P-4116**	16	WASHER-HARD (8.8X20.5X2-MM THK)	
	11	1	**7X-7729**	24	WASHER (11X25X3-MM THK)	
M	12	1	**8T-0389**	4	LOCKNUT (M10X1.5-THD)	
M	13	1	**8T-4136**	16	BOLT (M10X1.5X25-MM)	
M	14	1	**8T-4193**	4	BOLT (M16X2X50-MM)	
M	15	1	**8T-4196**	4	BOLT (M10X1.5X35-MM)	
	16	1	**9X-8257**	4	WASHER (17.5X30X3.5-MM THK)	
E	17	1	**206-2725**		GUARD-HOSE (80-CM EACH)	

E - ORDER BY THE CENTIMETER
M - METRIC PART

463-8753 **FENDER GP** (contd.) **i06068155**

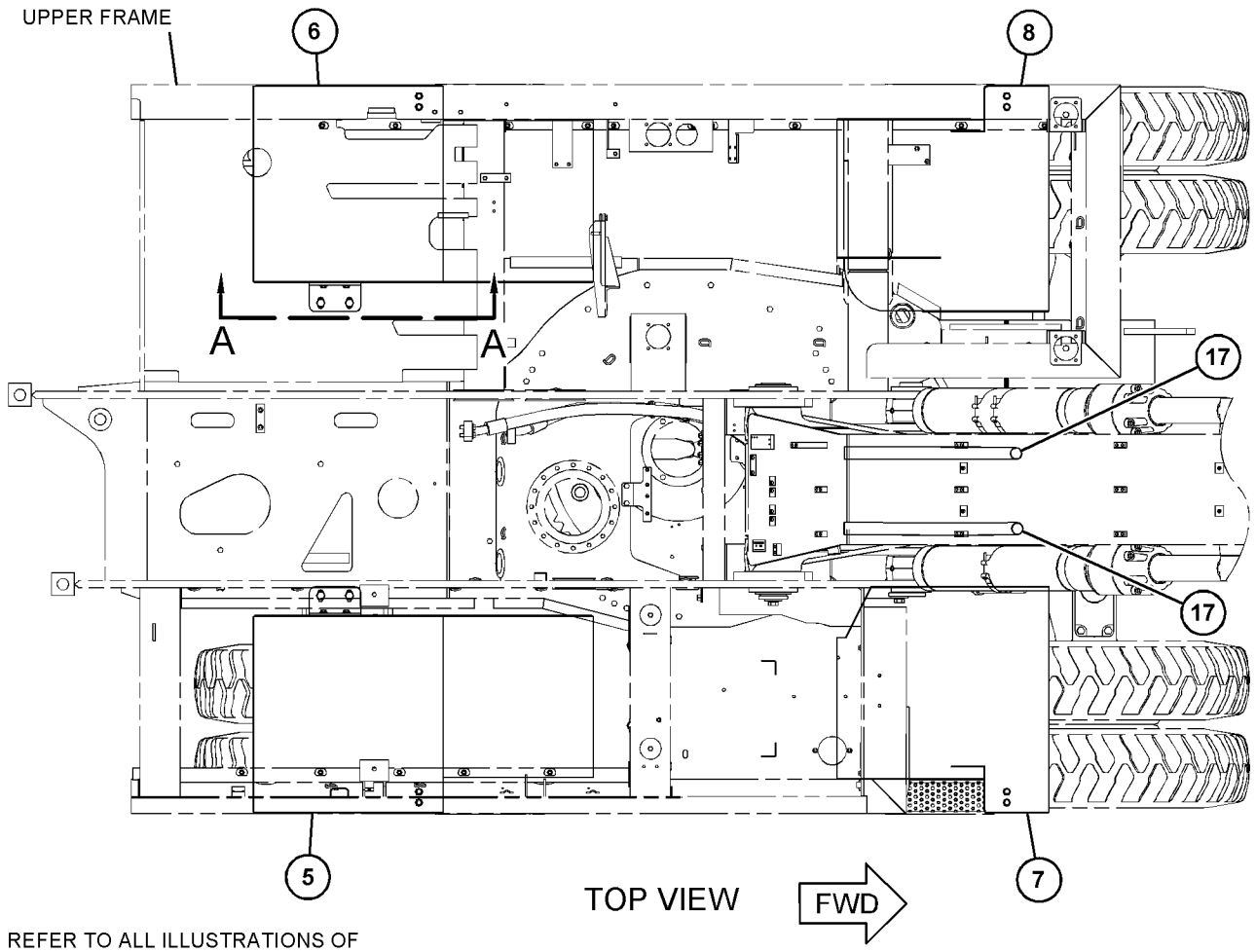

REFER TO ALL ILLUSTRATIONS OF THIS GROUP FOR AUXILIARY VIEWS

GRAPHIC #1 g03863831

463-8753 **FENDER GP** (contd.) **i06068155**

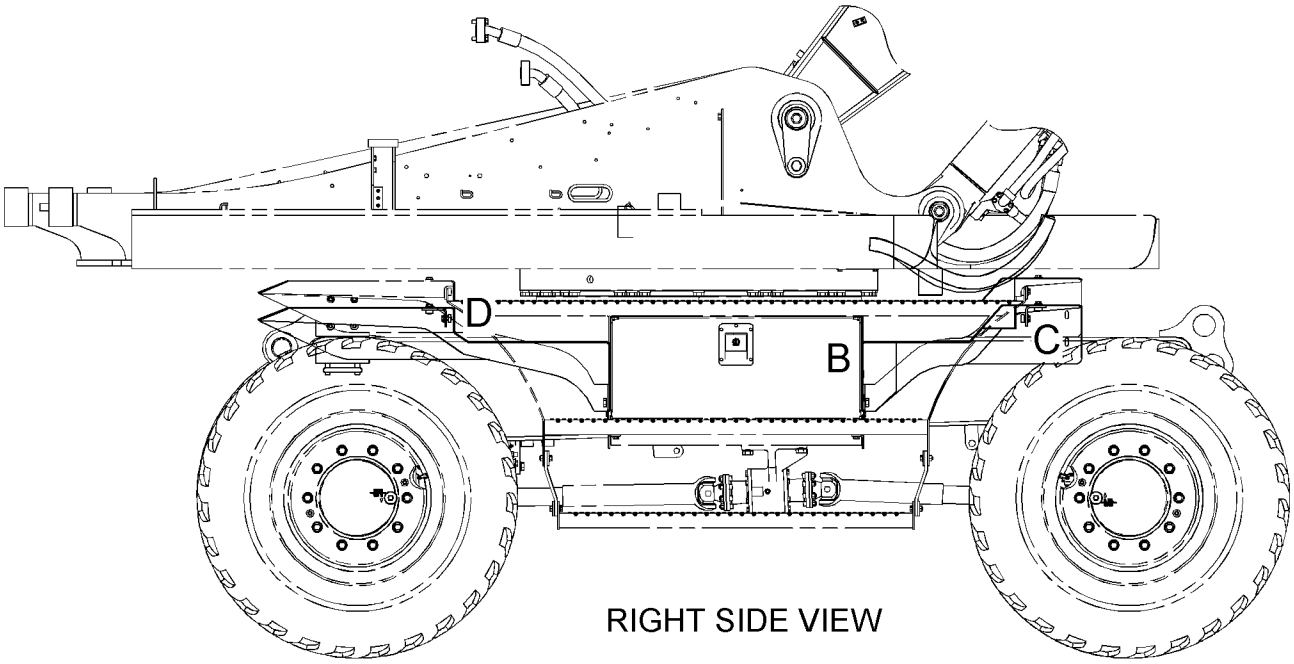

RIGHT SIDE VIEW

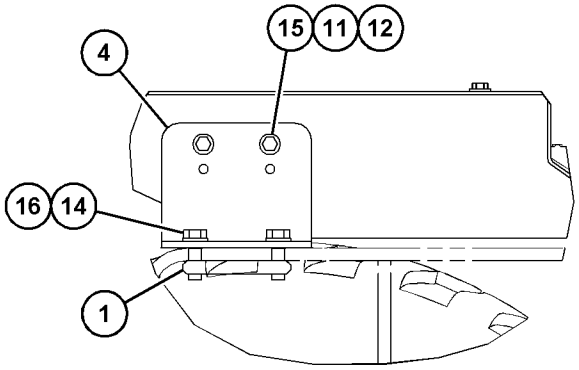

VIEW A-A

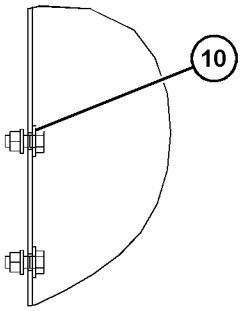

VIEW OF AREA B

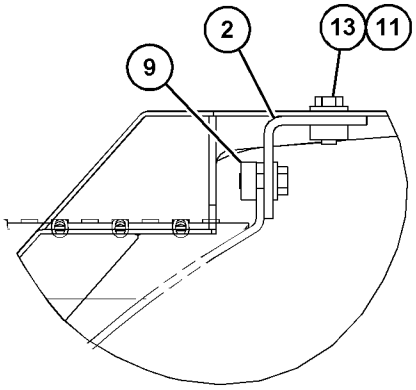

VIEW OF AREA C

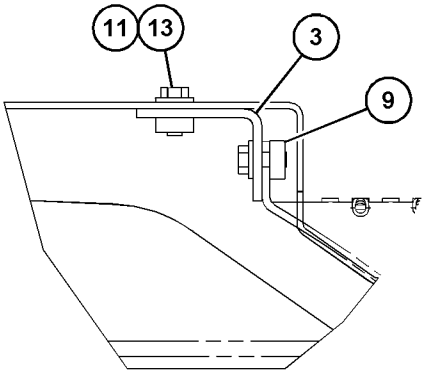

VIEW OF AREA D

GRAPHIC #2 <END> g03863835

340-6880 FRAME GP-UPPER

S/N: CH91-UP
PART OF 449-2824 CHASSIS AR
ALSO AN ATTACHMENT

SMCS-7051 **i06068156**

NOTE	REF NO	GRAPHIC REF	PART NUMBER	QTY	PART NAME 1 2 3 4 5 6 (PRODUCT LEVEL)	SEE PAGE
	1	2	**128-0994**	1	GROMMET	
	2	2	**129-9111**	1	GROMMET	
	3	2	**133-4419**	1	GROMMET	
	4	1	**188-3352**	2	PIN AS	
	5	1	**188-3761**	1	PIN AS	
	6	2	**189-2061**	1	BRACKET AS	
	7	2	**209-3062**	3	GROMMET	
	8	2	**210-1939**	1	PLATE	
	9	1	**245-6490**	1	BUMPER AS	
	10	1	**380-4781**	1	FRAME & BEARING AS	
	10A	1	**189-4208**	2	BEARING	
		1	**127-2091**	2	WASHER (95X125X1-MM THK)	
		1	**286-4164**	1	PLATE AS	
B	11	1	**093-0083**	2	SHIM (1-MM THK)	
B	12	1	**093-0084**	1	SHIM (1-MM THK)	
B	13	1	**093-0115**	2	SHIM (2-MM THK)	
B	14	1	**093-0116**	1	SHIM (2-MM THK)	
	15	1	**093-0349**	3	WASHER (22X60X6-MM THK)	
	16	2	**128-8389**	1	PLATE	
B	17	1	**133-2425**	2	SHIM (0.5-MM THK)	
B	18	1	**113-2127**	1	SHIM (0.5-MM THK)	
	19	2	**5P-4116**	3	WASHER-HARD (8.8X20.5X2-MM THK)	
M	20	2	**8T-4200**	4	BOLT (M8X1.25X16-MM)	
B	21	1	**7Y-2497**	1	SHIM (1.6-MM THK)	
B	22	1	**7Y-2498**	2	SHIM (1.6-MM THK)	
	23	2	**7Y-8165**	3	GROMMET	
	24	1	**8T-4123**	3	WASHER (22X35X3.5-MM THK)	
M	25	2	**8T-4137**	2	BOLT (M10X1.5X20-MM)	
M	26	2	**8T-4171**	1	BOLT (M6X1X12-MM)	
M	27	1	**8T-4780**	3	BOLT (M20X2.5X30-MM)	
M	28	2	**8T-4908**	3	BOLT (M8X1.25X25-MM)	
D	29	1,2	**8T-3425**		CHANNEL-TRIM (0.2-M EACH)	
D	29A	1,2	**8T-3425**		CHANNEL-TRIM (0.1-M EACH)	
E	30	1	**217-3403**		SEAL (9-CM)	
D	31	1	**6V-5738**		TRIM-EDGE (0.2-M)	

B - USE AS REQUIRED
D - ORDER BY THE METER
E - ORDER BY THE CENTIMETER
M - METRIC PART

340-6880 **FRAME GP-UPPER** (contd.) **i06068156**

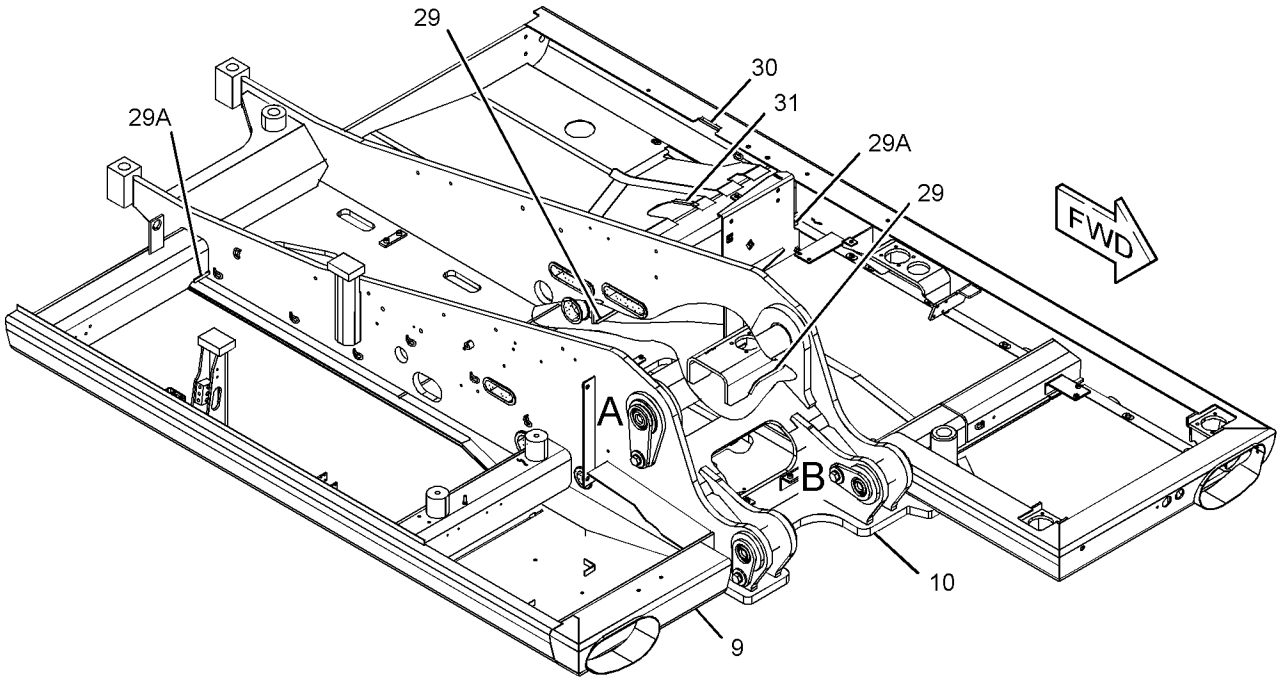

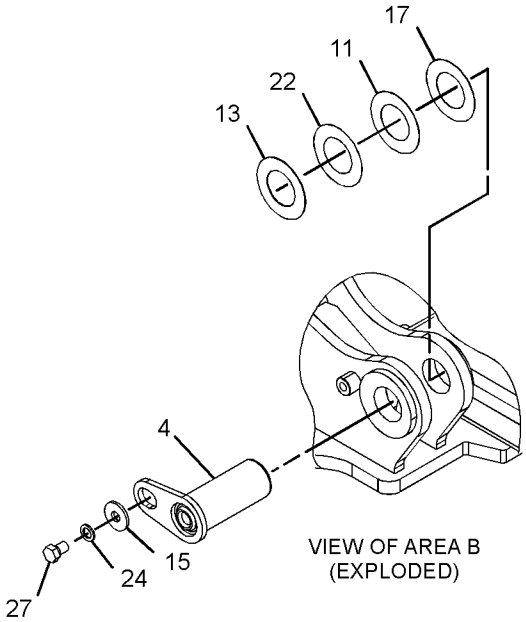

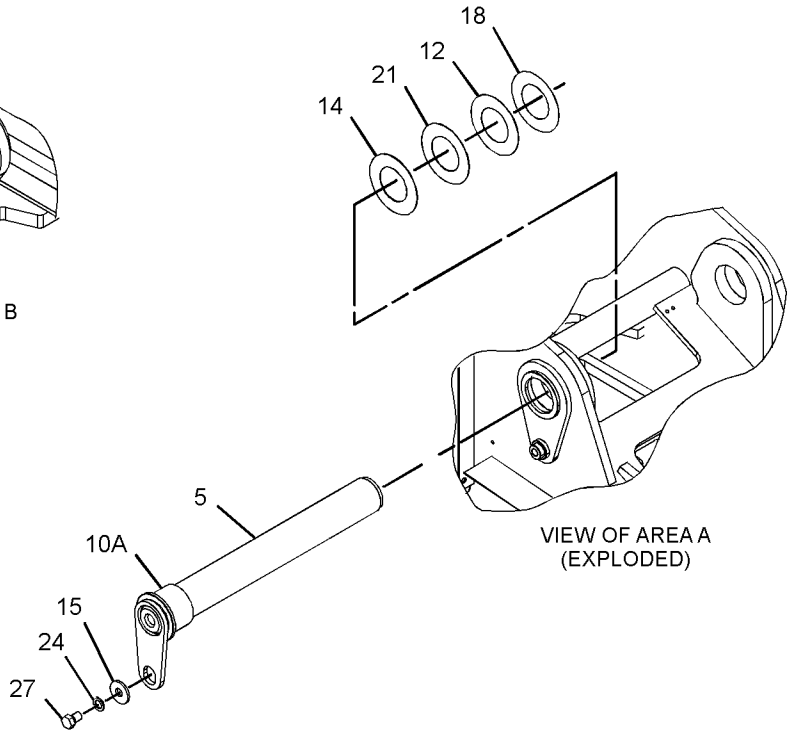

GRAPHIC #1 g03374789

340-6880 **FRAME GP-UPPER** (contd.) **i06068156**

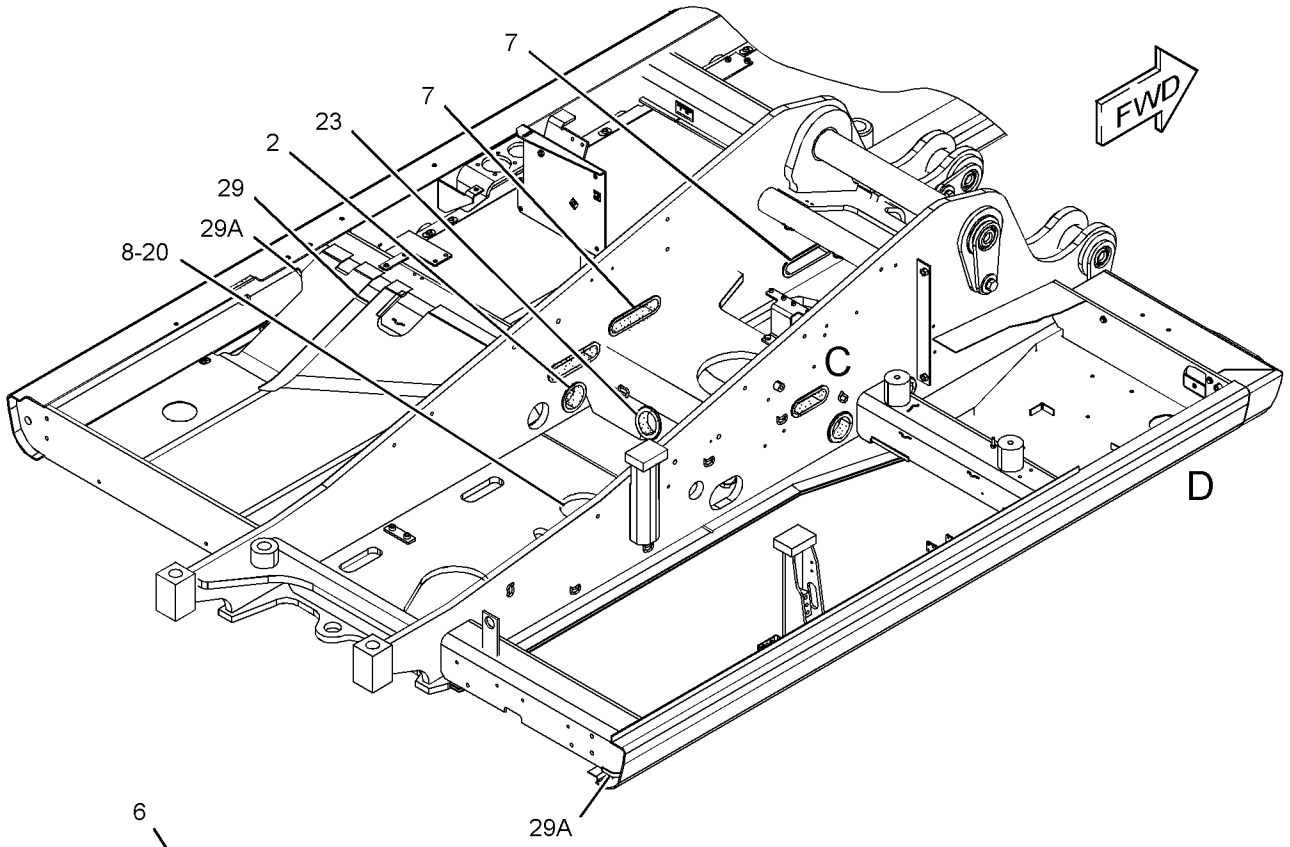

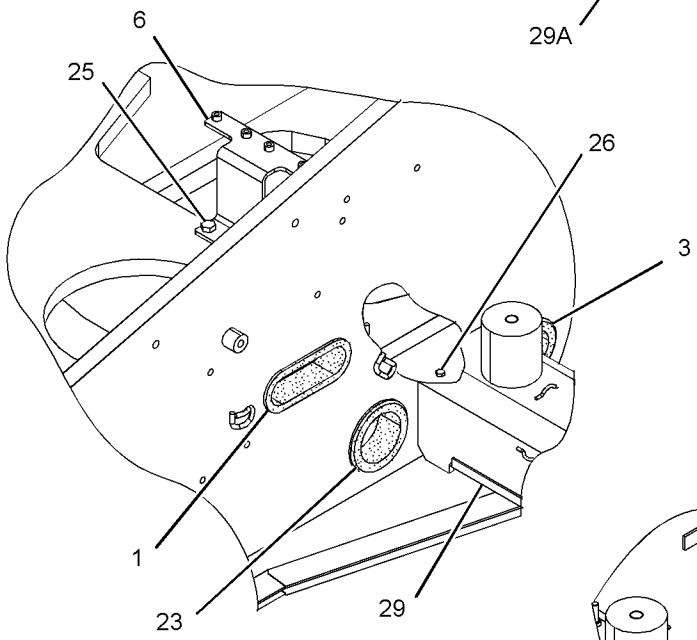

VIEW OF AREA C

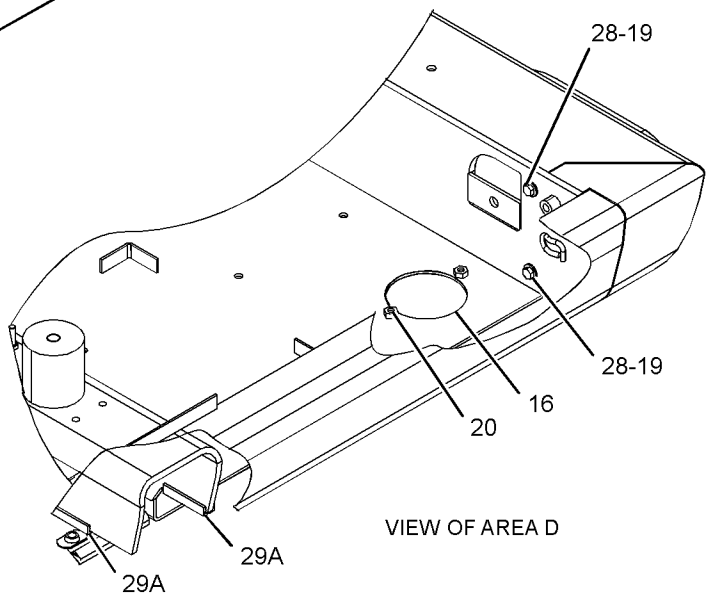

VIEW OF AREA D

GRAPHIC #2 <END> g03374790

190-8206 GEAR & BEARING GP-SWING

S/N: CH91-UP
PART OF 449-2824 CHASSIS AR
ALSO AN ATTACHMENT

SMCS-7063 **i05519597**

NOTE	REF NO	GRAPHIC REF	PART NUMBER	QTY	PART NAME 1 2 3 4 5 6 (PRODUCT LEVEL)	SEE PAGE
	1	1	**7Y-1647**	1	GASKET	
	2	1	**085-9311**	34	SPACER (20.6X38X6-MM THK)	
	3	1	**126-1529**	1	PLATE-SWING BEARING	
	4	1	**7Y-1863**	30	SPACER (20.5X38X34-MM THK)	
Y	5	1	**377-8966**	1	GEAR & BEARING GP-SWING	298
M	6	1	**303-9443**	34	BOLT (M20X2.5X110-MM)	
M	7	1	**303-9444**	30	BOLT (M20X2.5X90-MM)	
	8	1	**4M-6921**	4	WASHER-SPRING	
	9	1	**7Y-1648**	1	STRIP	
M	10	1	**8T-4137**	4	BOLT (M10X1.5X20-MM)	
M	11	1	**8T-4199**	6	BOLT (M8X1.25X12-MM)	
	12	1	**9T-2905**	6	WASHER-BELLEVILLE	
B	13	1	**1U-8846**		SEALANT-GASKET	

B - USE AS REQUIRED
M - METRIC PART
Y - SEPARATE ILLUSTRATION

190-8206 **GEAR & BEARING GP-SWING (**contd.**)** **i05519597**

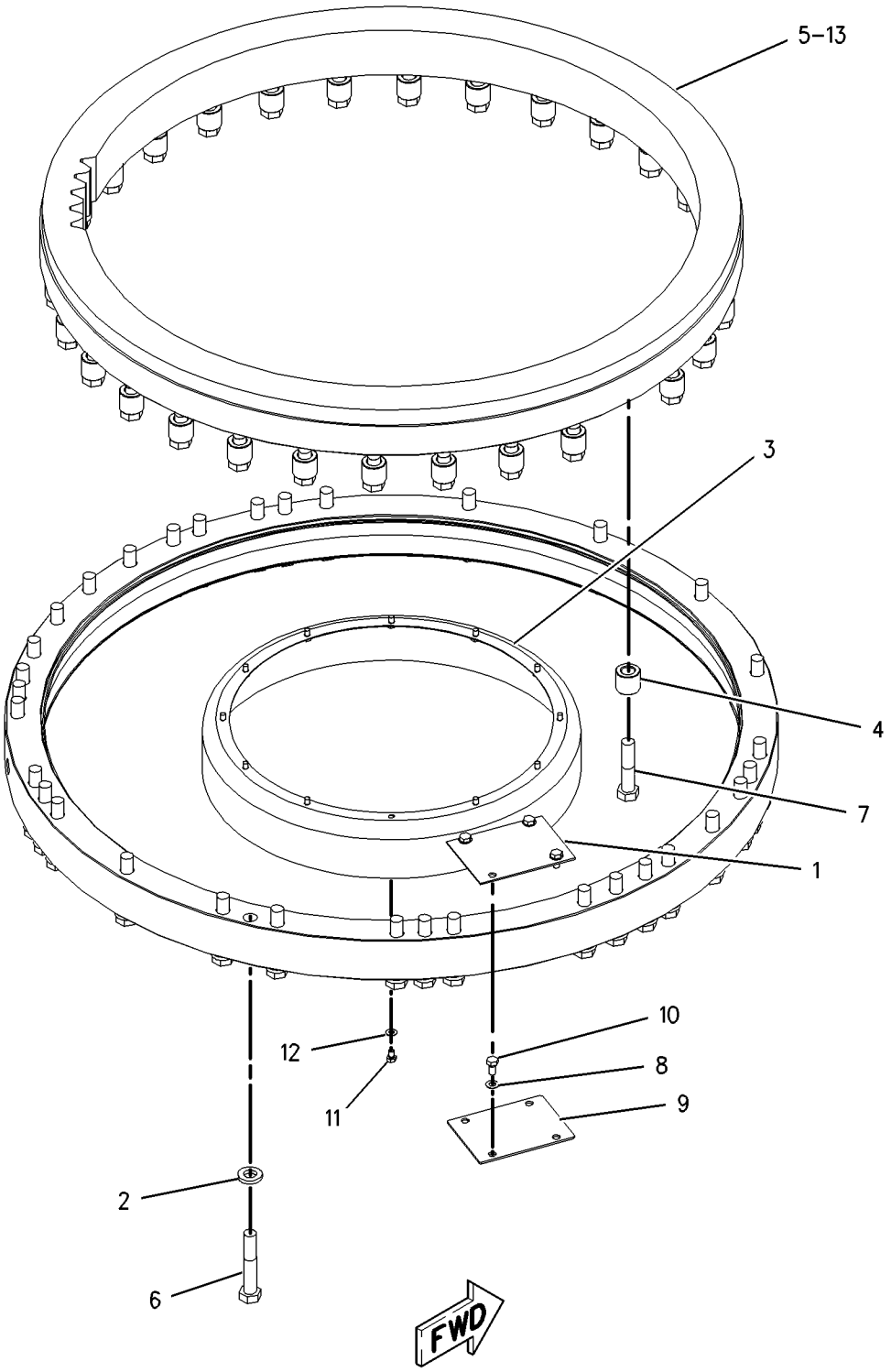

GRAPHIC #1 <END> g00812394

190-8207 GEAR & BEARING GP-SWING

S/N: CH91-UP

PART OF 377-8966 GEAR & BEARING GP-SWING

ALSO AN ATTACHMENT

SMCS-7063 **i05519602**

NOTE	REF NO	GRAPHIC REF	PART NUMBER	QTY	PART NAME 1 2 3 4 5 6 (PRODUCT LEVEL)	SEE PAGE
E	1	1	**148-4685**		SEAL (350-CM EACH)	

E - ORDER BY THE CENTIMETER

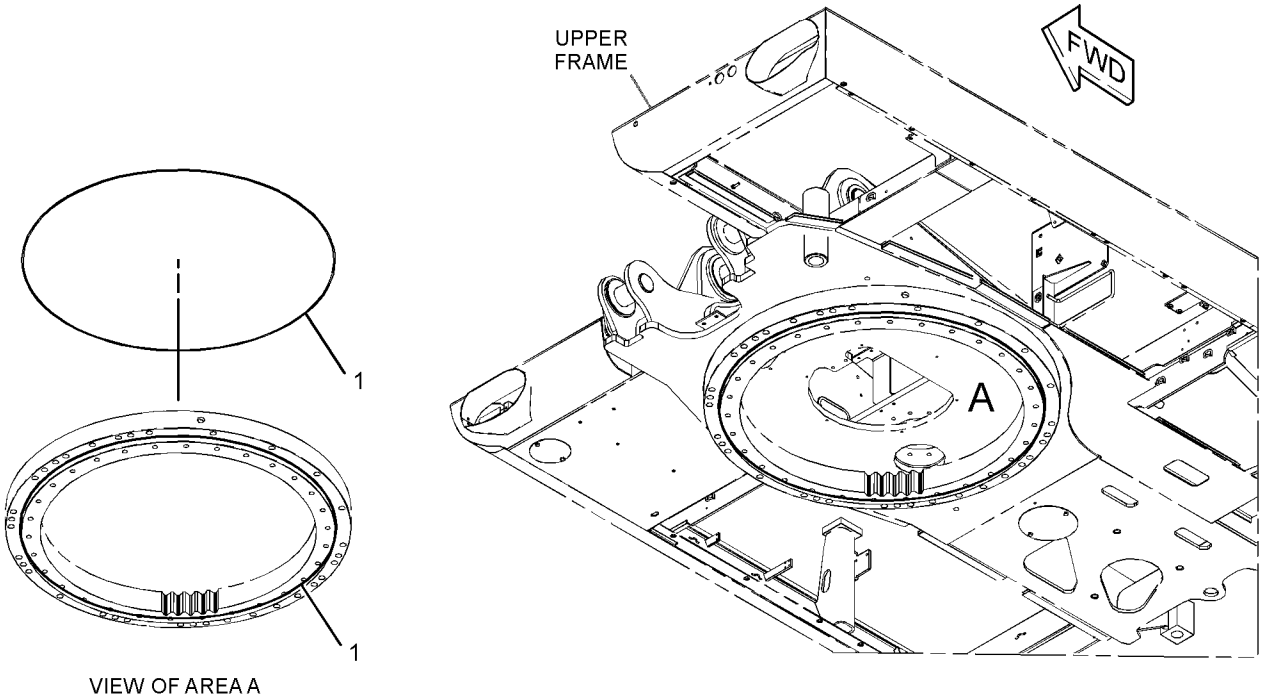

GRAPHIC #1 <END> g02725619

377-3724 GEAR & BEARING GP-SWING

S/N: CH91-UP

PART OF 377-8966 GEAR & BEARING GP-SWING

ALSO AN ATTACHMENT

SMCS-7063 **i05519603**

NOTE	REF NO	GRAPHIC REF	PART NUMBER	QTY	PART NAME 1 2 3 4 5 6 (PRODUCT LEVEL)	SEE PAGE
					(NO BREAKDOWN OF SERVICEABLE PARTS AVAILABLE AT TIME OF PUBLICATION)	

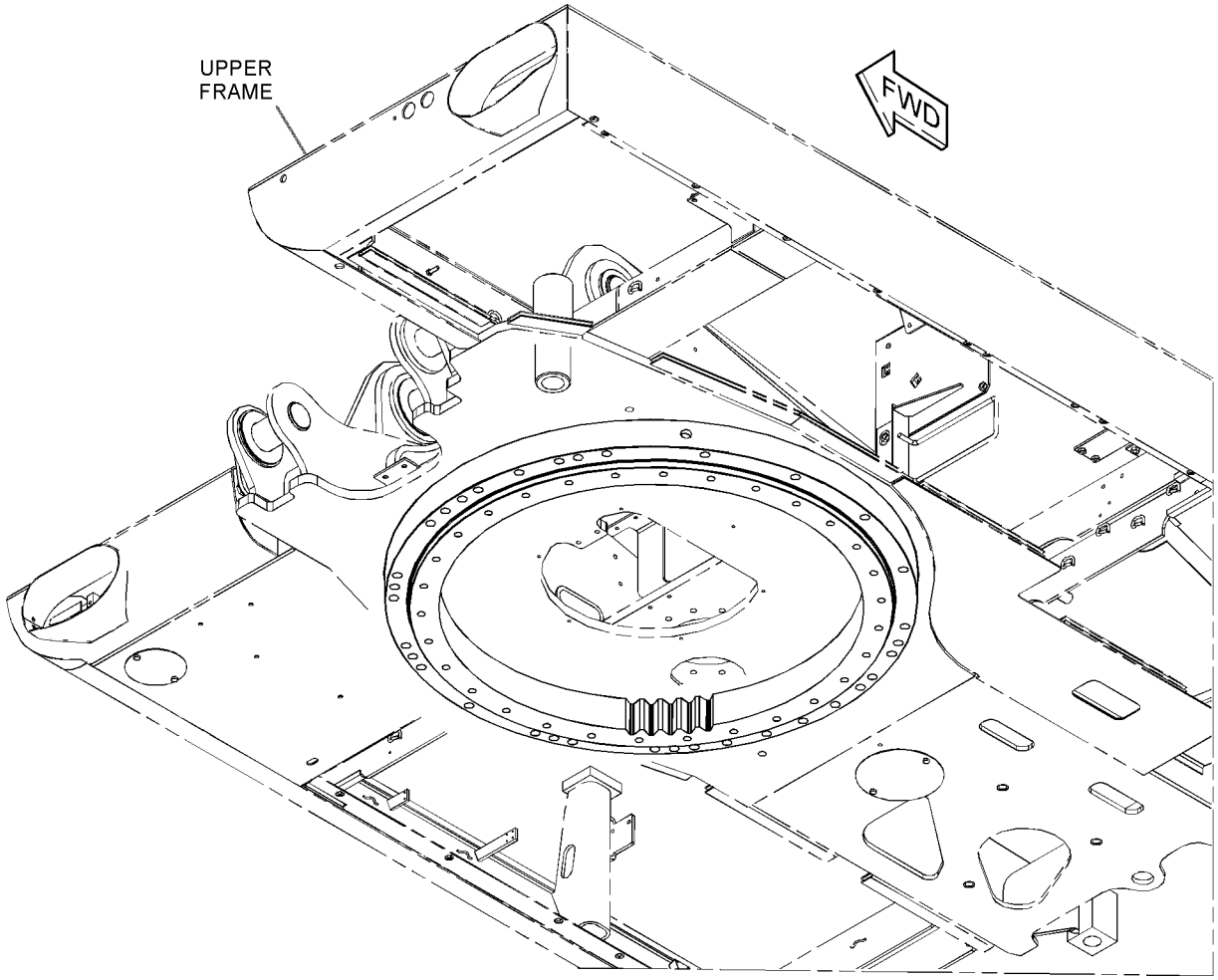

GRAPHIC #1 <END> g02725810

377-8966 GEAR & BEARING GP-SWING

S/N: CH91-UP

PART OF 190-8206 GEAR & BEARING GP-SWING

ALSO AN ATTACHMENT

SMCS-7063 **i05519601**

NOTE	PART NUMBER	QTY	PART NAME 1 2 3 4 5 6 (PRODUCT LEVEL)	SEE PAGE
Y	*190-8207*	1	GEAR & BEARING GP-SWING	296
			—OR—	
Y	*377-3724*	1	GEAR & BEARING GP-SWING	297

Y - SEPARATE ILLUSTRATION

<END>

340-6886 GUARD GP-BOTTOM

S/N: CH91-UP
PART OF 449-2824 CHASSIS AR
ALSO AN ATTACHMENT

SMCS-7153 **i05934481**

NOTE	REF NO	GRAPHIC REF	PART NUMBER	QTY	PART NAME 1 2 3 4 5 6 (PRODUCT LEVEL)	SEE PAGE
	1	1	**5W-1119**	19	WASHER (9.8X18.5X1.5-MM THK)	
	2	1	**112-8624**	2	COVER-REAR (LH)	
	3	1	**112-8625**	1	COVER-REAR (RH)	
	4	1	**113-4686**	1	COVER-REAR (RH)	
	5	1	**140-7197**	1	COVER-FRONT (LH)	
	6	1	**144-7122**	1	COVER-MIDDLE (LH)	
	7	1	**216-4191**	1	PLATE	
	8	1	**216-4193**	1	PLATE AS	
	9	1	**245-6397**	1	COVER-FRONT	
	10	1	**8T-4121**	4	WASHER-HARD (11X21X2.5-MM THK)	
M	11	1	**8T-4136**	2	BOLT (M10X1.5X25-MM)	
M	12	1	**8T-4137**	2	BOLT (M10X1.5X20-MM)	
	13	1	**8T-6467**	19	FASTENER-HEX HEAD	
E	14	1	**148-9561**		SEAL (18-CM)	
E	14A	1	**148-9561**		SEAL (75-CM)	
E	14B	1	**148-9561**		SEAL (53-CM)	
E	14C	1	**148-9561**		SEAL (13-CM)	

E - ORDER BY THE CENTIMETER
M - METRIC PART

340-6886 **GUARD GP-BOTTOM** (contd.) **i05934481**

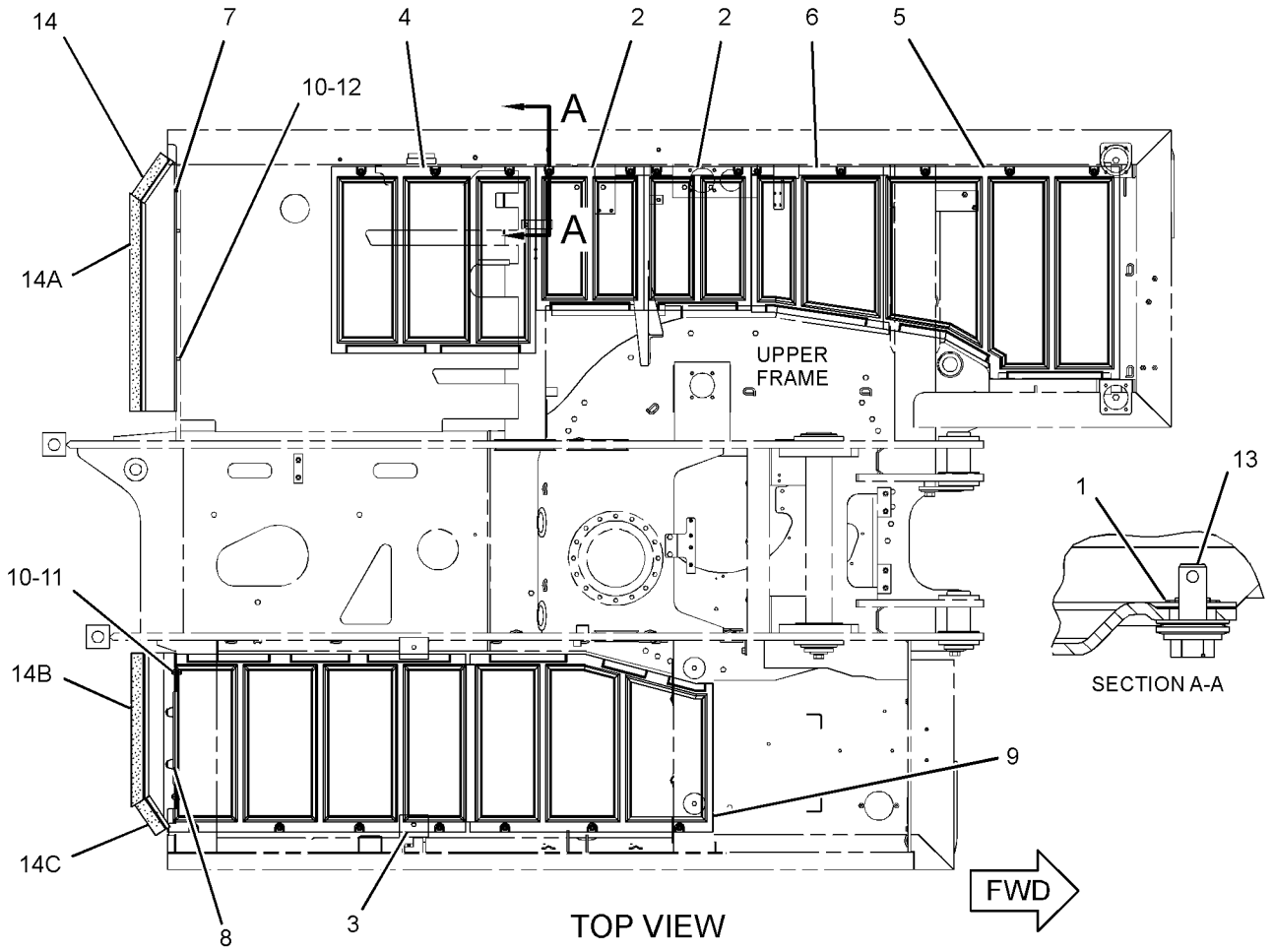

GRAPHIC #1 <END> g02421976

454-3395 HOOD & GUARD AR

S/N: CH91-UP
PART OF 449-2824 CHASSIS AR
ALSO AN ATTACHMENT

SMCS-7251 **i06755347**

NOTE	PART NUMBER	QTY	PART NAME 1 2 3 4 5 6 (PRODUCT LEVEL)	SEE PAGE
Y	*273-4835*	1	DOOR GP-ACCESS (PILOT MANIFOLD)	278
Y	*454-3396*	1	ENCLOSURE GP-ENGINE	282
Y	*338-8347*	1	ENCLOSURE GP-FUEL TANK	285
Y	*254-9400*	1	STEP GP-TOOL BOX	311
Y	*321-8800*	1	TANK & MTG GP-HYDRAULIC	613
			—OR—	
Y	*475-2048*	1	TANK & MTG GP-HYDRAULIC	614

Y - SEPARATE ILLUSTRATION

<END>

210-0603 INSULATION GP-SOUND SUPPR

S/N: CH91-UP
PART OF 449-3653 ENCLOSURE GP-RADIATOR
ALSO AN ATTACHMENT

SMCS-1801, 7076, 7261 **i05517653**

NOTE	REF NO	GRAPHIC REF	PART NUMBER	QTY	PART NAME 1 2 3 4 5 6 (PRODUCT LEVEL)	SEE PAGE
	1	1	**210-0613**	1	INSULATION	
	2	1	**210-0605**	1	INSULATION	
	3	1	**210-0606**	1	INSULATION	

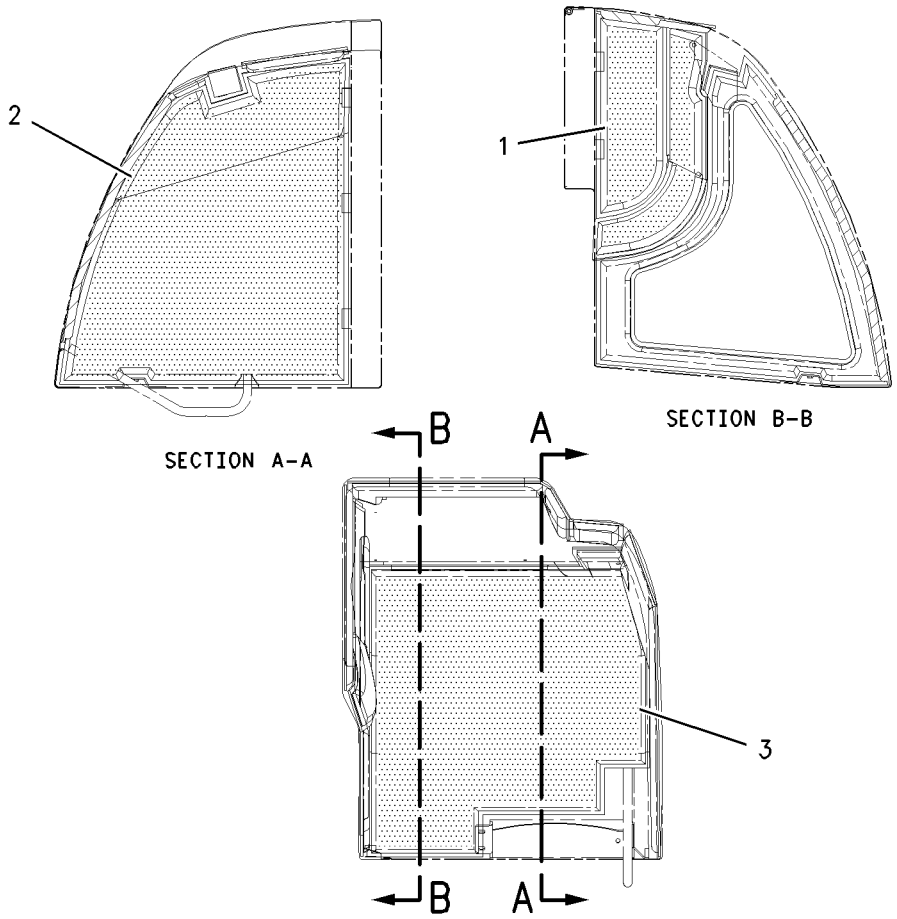

GRAPHIC #1 <END> g00985002

254-2692 LINES GP-GREASE—OSCILLATING AXLE PIN

S/N: CH91-UP
PART OF 354-7286 HYDRAULIC AR-LOWER
ALSO AN ATTACHMENT

SMCS-7510 **i05496597**

NOTE	REF NO	GRAPHIC REF	PART NUMBER	QTY	PART NAME 1 2 3 4 5 6 (PRODUCT LEVEL)	SEE PAGE
	1	1	**5W-2817**	2	FITTING-GREASE	
	2	1	**117-7634**	2	FITTING-STRAIGHT	
	3	1	**285-3071**	1	HOSE AS	
B	4	1	**9X-6772**	4	STRAP-CABLE	

B - USE AS REQUIRED

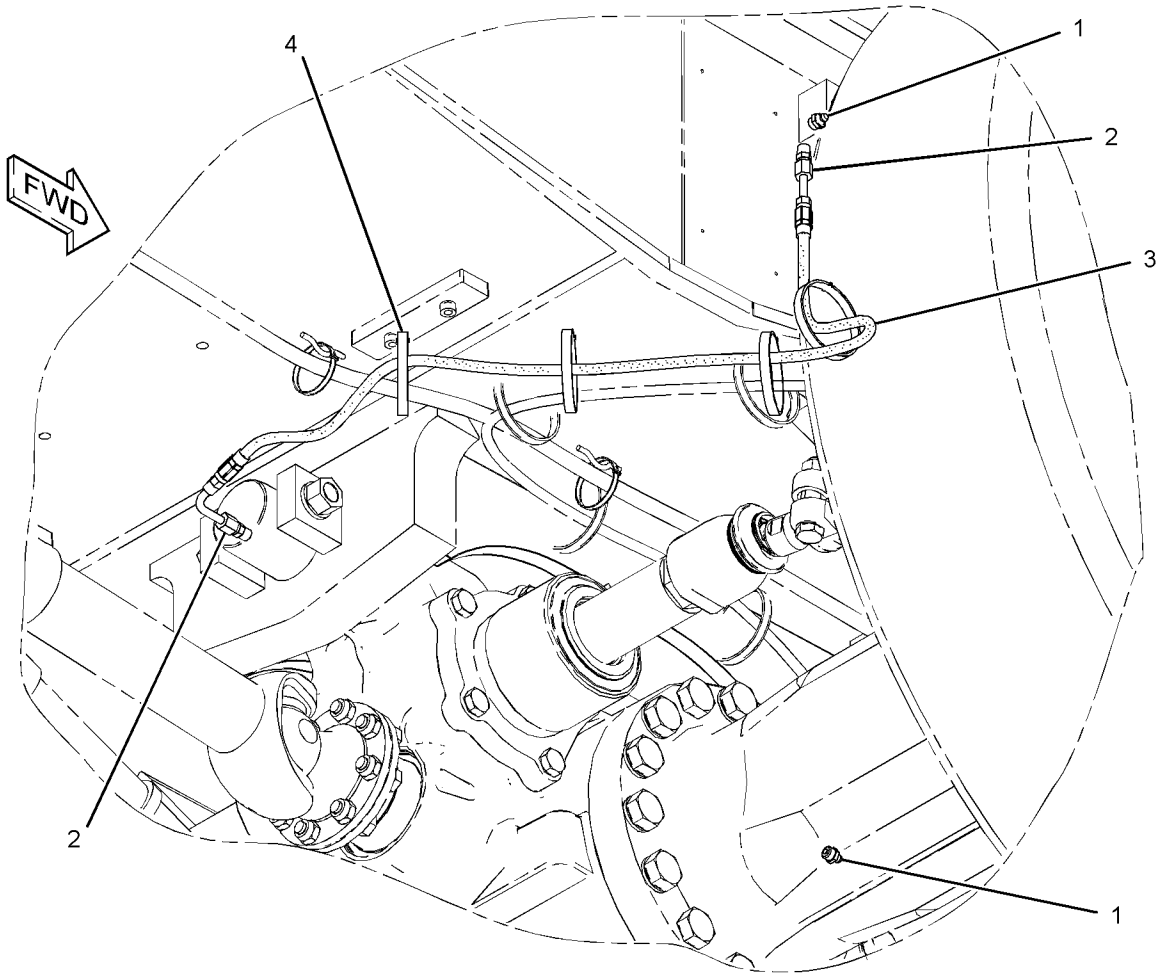

GRAPHIC #1 <END> g01325100

365-7700 LOCK GP-TRANSPORT–TRAVEL

S/N: CH91-UP

AN ATTACHMENT

SMCS-5484 **i05572713**

NOTE	REF NO	GRAPHIC REF	PART NUMBER	QTY	PART NAME 1 2 3 4 5 6 (PRODUCT LEVEL)	SEE PAGE
	1	1	**234-4186**	2	SHIM (10-MM THK)	
	2	1	**365-7701**	1	BRACKET AS	
	3	1	**365-7704**	2	RING	
M	4	1	**6V-7676**	2	NUT (M24X3-THD)	
M	5	1	**7X-2489**	2	BOLT (M24X3X100-MM)	

M - METRIC PART

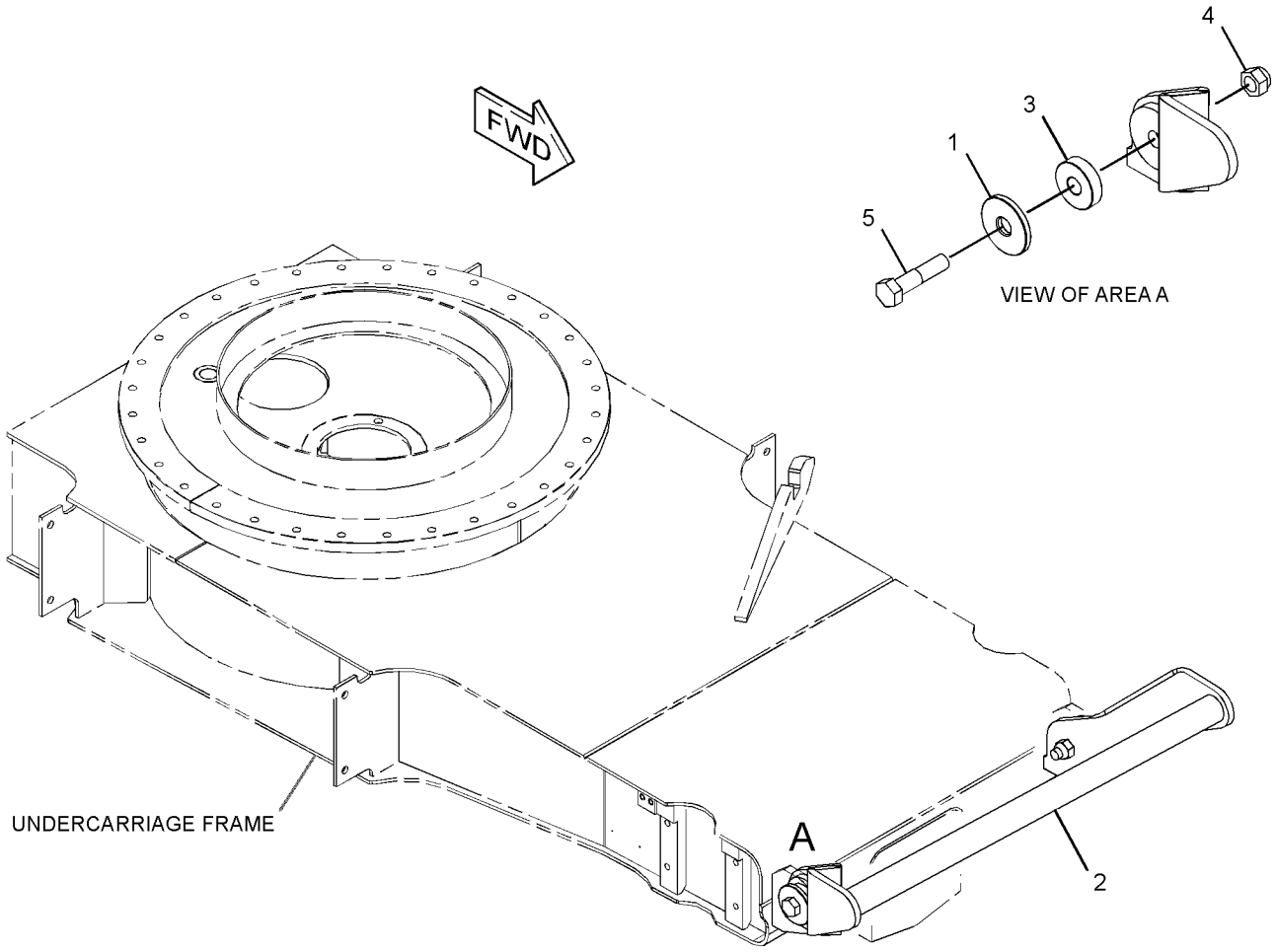

GRAPHIC #1 <END> g02739558

359-4768 MOUNTING GP-REGISTRATION—WITH WIRING, LIGHTS

S/N: CH91-UP
PART OF 453-3264 ROADING AR
AN ATTACHMENT

SMCS-1408, 1429, 7050 **i06233832**

NOTE	REF NO	GRAPHIC REF	PART NUMBER	QTY	PART NAME 1 2 3 4 5 6 (PRODUCT LEVEL)	SEE PAGE
	1	1	**5W-1119**	2	WASHER (9.8X18.5X1.5-MM THK)	
	2	1	**114-8907**	2	CLAMP	
	3	1	**123-3605**	4	SCREW-SPECIAL	
	4	1	**126-3831**	1	PLATE AS	
	5	1	**128-8537**	2	LATCH-LOCK	
	6	1	**205-6308**	1	BRACKET	
Y	7	1	**259-0134**	2	LAMP GP-REGISTRATION PLATE (24-VOLT)	167
Y	8	1	**359-4769**	1	HARNESS AS-LIGHTING (LICENSE PLATE)	144
	9	1	**359-4773**	1	BRACKET AS	
		1	**127-9580**	2	ROD	
B	10	1	**3S-2093**	4	STRAP-CABLE	
M	11	1	**101-7404**	2	BOLT-SOCKET HEAD (M10X1.5X30-MM)	

B - USE AS REQUIRED
M - METRIC PART
Y - SEPARATE ILLUSTRATION

359-4768 **MOUNTING GP-REGISTRATION** (contd.) **i06233832**

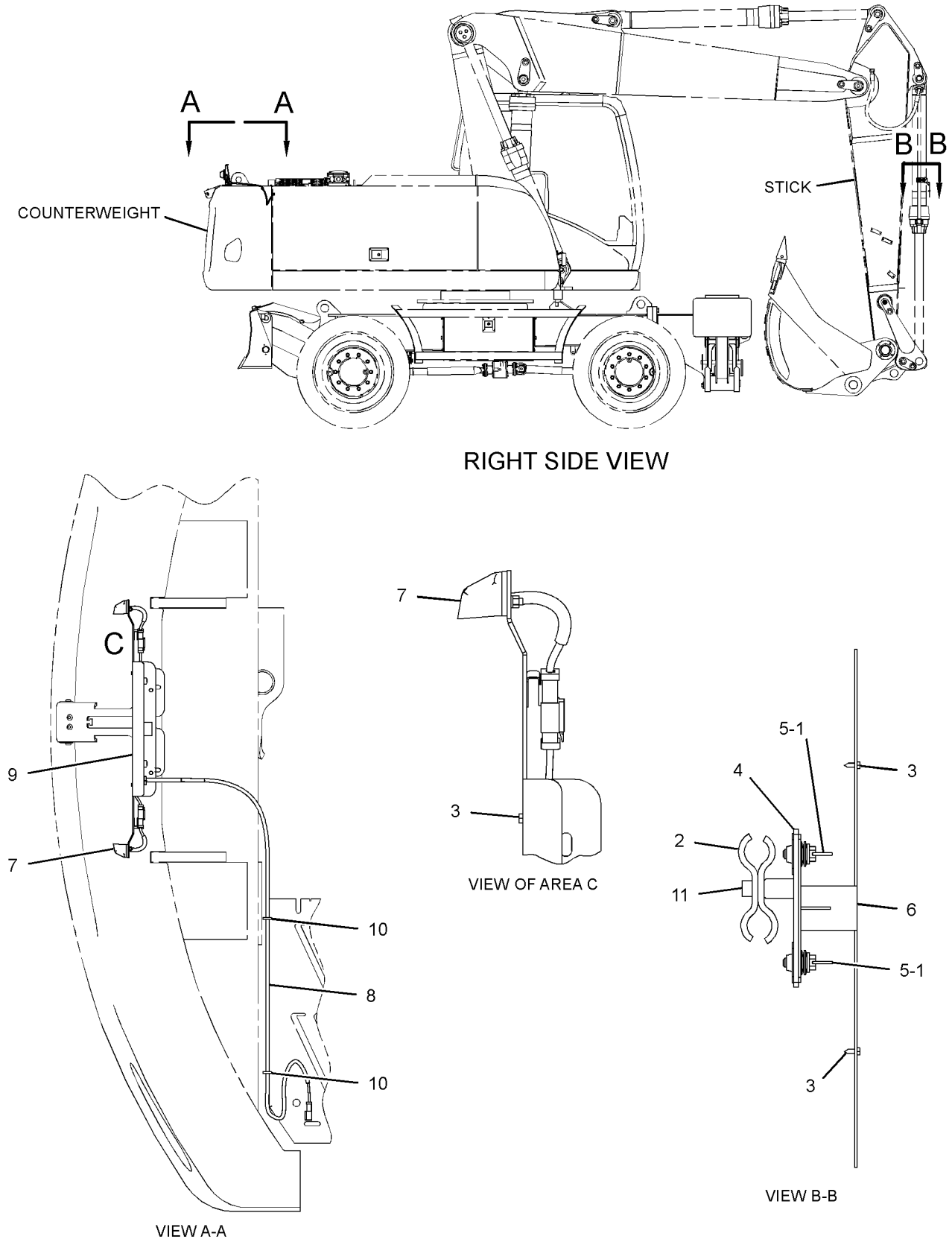

GRAPHIC #1 <END> g02431410

417-8207 MOUNTING GP-STEP & TOOL BOX

S/N: CH91-UP
PART OF 454-2156 STEP AR
ALSO AN ATTACHMENT

SMCS-7254, 7259 **i05970931**

NOTE	REF NO	GRAPHIC REF	PART NUMBER	QTY	PART NAME 1 2 3 4 5 6 (PRODUCT LEVEL)	SEE PAGE
Y	1	1	*387-2701*	1	STEP GP-TOOL BOX	313
Y	2	1	*417-8265*	1	BOX GP-TOOL (STEP)	908
M	3	1	**7X-2552**	4	BOLT (M16X2X30-MM)	
M	4	1	**8T-0389**	8	LOCKNUT (M10X1.5-THD)	
	5	1	**8T-4121**	16	WASHER-HARD (11X21X2.5-MM THK)	
M	6	1	**8T-4136**	8	BOLT (M10X1.5X25-MM)	
	7	1	**9X-8257**	4	WASHER (17.5X30X3.5-MM THK)	

M - METRIC PART
Y - SEPARATE ILLUSTRATION

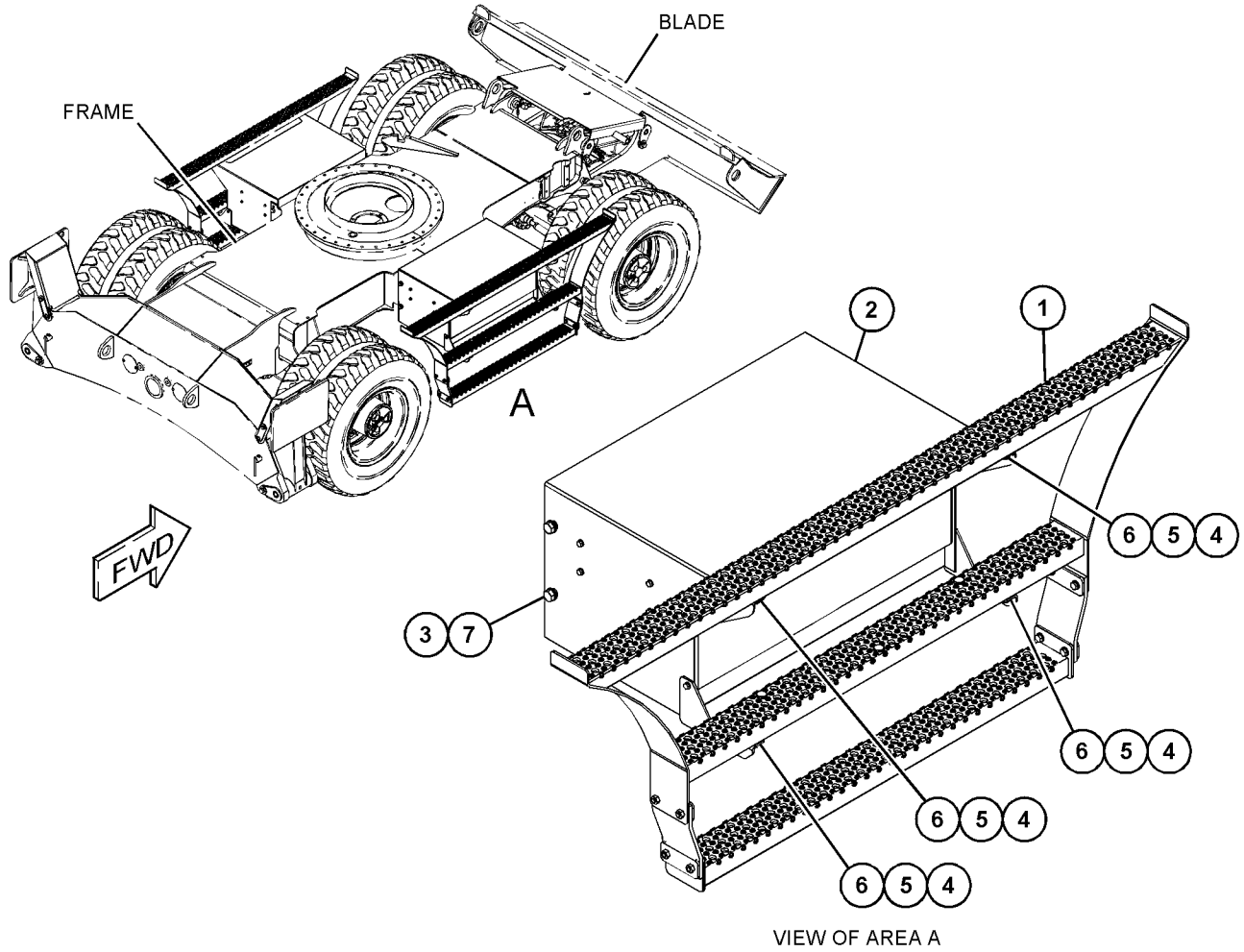

VIEW OF AREA A

GRAPHIC #1 <END> g03649096

305-3612 PANEL GP-SOUND SUPPRESSION

S/N: CH91-UP
PART OF 454-3396 ENCLOSURE GP-ENGINE
ALSO AN ATTACHMENT

SMCS-1801, 7076, 7261 **i05946780**

NOTE	REF NO	GRAPHIC REF	PART NUMBER	QTY	PART NAME 1 2 3 4 5 6 (PRODUCT LEVEL)	SEE PAGE
	1	1	**254-9412**	1	RUBBER	
	2	1	**300-2255**	1	BRACKET	
	3	1	**305-3628**	1	PLATE AS	
M	4	1	**131-3540**	5	LOCKNUT (M8X1.25-THD)	
	5	1	**5P-1076**	2	WASHER-HARD (13.5X30X4-MM THK)	
	6	1	**5P-4116**	10	WASHER-HARD (8.8X20.5X2-MM THK)	
M	7	1	**8T-4192**	2	BOLT (M12X1.75X25-MM)	
M	8	1	**8T-4908**	5	BOLT (M8X1.25X25-MM)	

M - METRIC PART

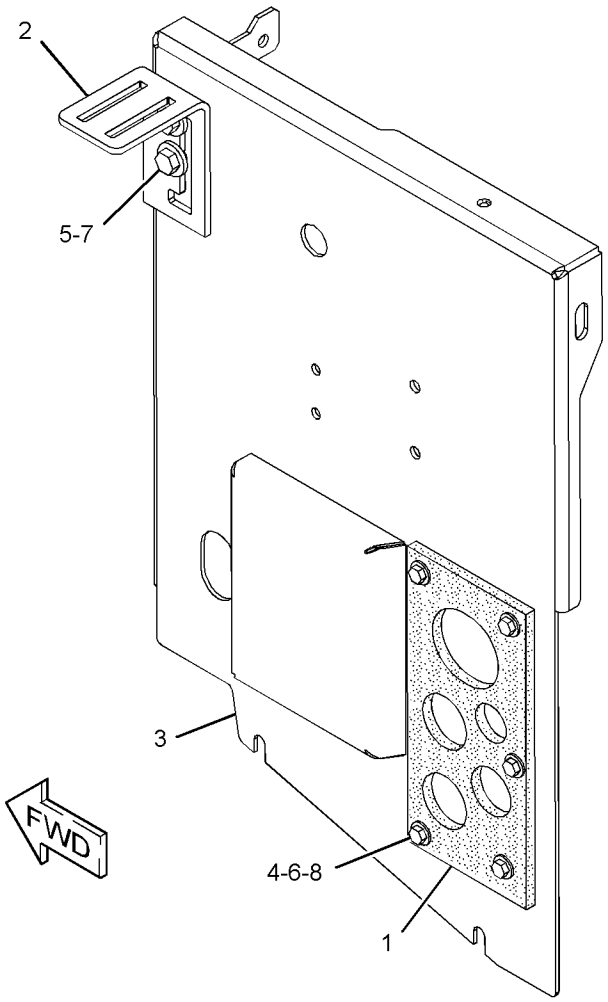

GRAPHIC #1 <END> g01649135

473-4932 PANEL GP-SOUND SUPPRESSION

S/N: CH91-UP
PART OF 454-3396 ENCLOSURE GP-ENGINE
ALSO AN ATTACHMENT

SMCS-1801, 7076, 7261 **i06134826**

NOTE	REF NO	GRAPHIC REF	PART NUMBER	QTY	PART NAME 1 2 3 4 5 6 (PRODUCT LEVEL)	SEE PAGE
	1	1	**256-6419**	1	INSULATION	
	2	1	**300-2254**	1	BRACKET	
	3	1	**473-4933**	1	ROD	
	4	1	**473-4934**	1	PLATE AS	
M	5	1	**5C-7261**	4	NUT (M8X1.25-THD)	
	6	1	**5P-1076**	2	WASHER-HARD (13.5X30X4-MM THK)	
	7	1	**5P-4116**	4	WASHER-HARD (8.8X20.5X2-MM THK)	
M	8	1	**8T-4192**	2	BOLT (M12X1.75X25-MM)	
E	9	1	**310-3126**		SEAL (87-CM)	

E - ORDER BY THE CENTIMETER
M - METRIC PART

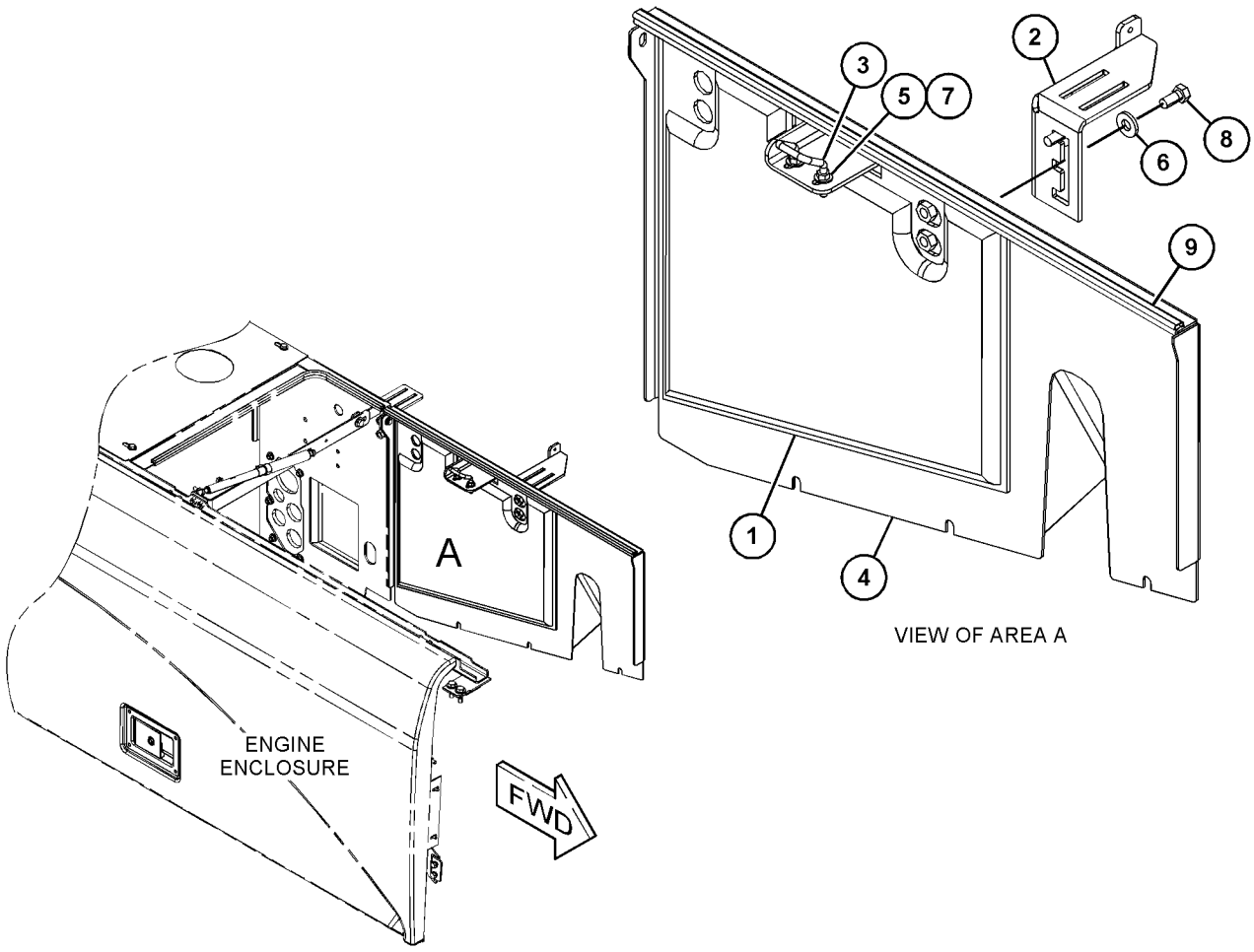

GRAPHIC #1 <END> g03872803

454-2156 STEP AR

S/N: CH91-UP
PART OF 449-2824 CHASSIS AR
ALSO AN ATTACHMENT

SMCS-7254 **i05970922**

NOTE	PART NUMBER	QTY	PART NAME 1 2 3 4 5 6 (PRODUCT LEVEL)	SEE PAGE
Y	*417-8207*	2	MOUNTING GP-STEP & TOOL BOX	307

Y - SEPARATE ILLUSTRATION

<END>

254-9400 STEP GP-TOOL BOX

S/N: CH91-UP
PART OF 454-3395 HOOD & GUARD AR
ALSO AN ATTACHMENT

SMCS-7254 **i06656129**

NOTE	REF NO	GRAPHIC REF	PART NUMBER	QTY	PART NAME 1 2 3 4 5 6 (PRODUCT LEVEL)	SEE PAGE
	1	1	**223-3572**	1	PLATE	
M	2	1	**237-2228**	1	BOLT (M10X1.5X70-MM)	
	3	1	**300-2260**	1	SUPPORT AS	
	4	1	**259-6797**	1	STEP AS	
	5	1	**259-6813**	1	COVER AS	
		1	**254-9405**	2	HINGE AS	
	6	1	**273-4833**	1	PLATE	
Y	7	1	*276-5560*	1	BOX GP-TOOL	906
	8	1	**278-6977**	1	HANDRAIL AS	
M	9	1	**141-9203**	4	SCREW-BUTTON HEAD (M10X1.5X30-MM)	
M	10	1	**5C-7261**	6	NUT (M8X1.25-THD)	
	11	1	**5P-4116**	5	WASHER-HARD (8.8X20.5X2-MM THK)	
	12	1	**7X-0579**	2	WASHER-HARD (8.8X25.5X2-MM THK)	
	13	1	**7X-7729**	4	WASHER (11X25X3-MM THK)	
	14	1	**8T-4121**	8	WASHER-HARD (11X21X2.5-MM THK)	
M	15	1	**8T-4133**	3	NUT (M10X1.5-THD)	
M	16	1	**8T-4136**	2	BOLT (M10X1.5X25-MM)	
M	17	1	**8T-4189**	7	BOLT (M8X1.25X20-MM)	
	18	1	**8T-4224**	2	WASHER-HARD (8.8X16X2-MM THK)	
M	19	1	**8T-4908**	2	BOLT (M8X1.25X25-MM)	
M	20	1	**8T-7547**	1	BOLT (M8X1.25X30-MM)	
M	21	1	**8T-4137**	2	BOLT (M10X1.5X20-MM)	
	22	1	**7X-0579**	4	WASHER-HARD (8.8X25.5X2-MM THK)	

M - METRIC PART
Y - SEPARATE ILLUSTRATION

254-9400 **STEP GP-TOOL BOX** (contd.) **i06656129**

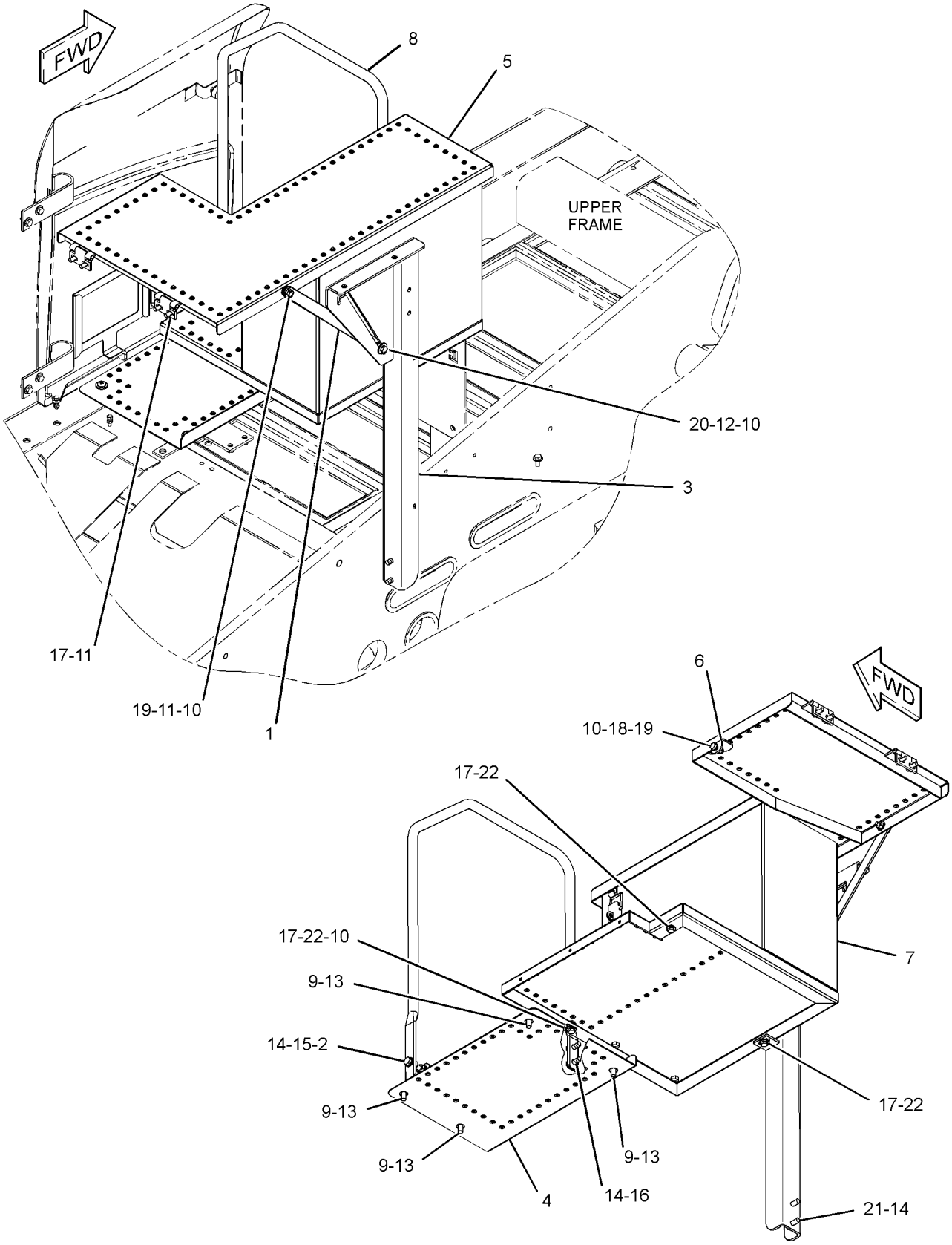

GRAPHIC #1 <END> g06064689

387-2701 STEP GP-TOOL BOX

S/N: CH91-UP
PART OF 417-8207 MOUNTING GP-STEP & TOOL BOX
ALSO AN ATTACHMENT

SMCS-7254 **i06149162**

NOTE	REF NO	GRAPHIC REF	PART NUMBER	QTY	PART NAME 1 2 3 4 5 6 (PRODUCT LEVEL)	SEE PAGE
	1	1	**364-7012**	4	BUMPER	
	2	1	**387-2699**	1	STEP AS	
M		1	**8T-3490**	4	NUT-WELD (M10X1.5-THD)	
	3	1	**387-2705**	1	STEP AS	
	4	1	**387-2707**	2	BELT	
	5	1	**387-2708**	2	PLATE AS	
					(EACH INCLUDES)	
M		1	**8T-3490**	2	NUT-WELD (M10X1.5-THD)	
	6	1	**417-8237**	2	PLATE	
	7	1	**8T-4121**	8	WASHER-HARD (11X21X2.5-MM THK)	
M	8	1	**8T-4196**	8	BOLT (M10X1.5X35-MM)	

M - METRIC PART

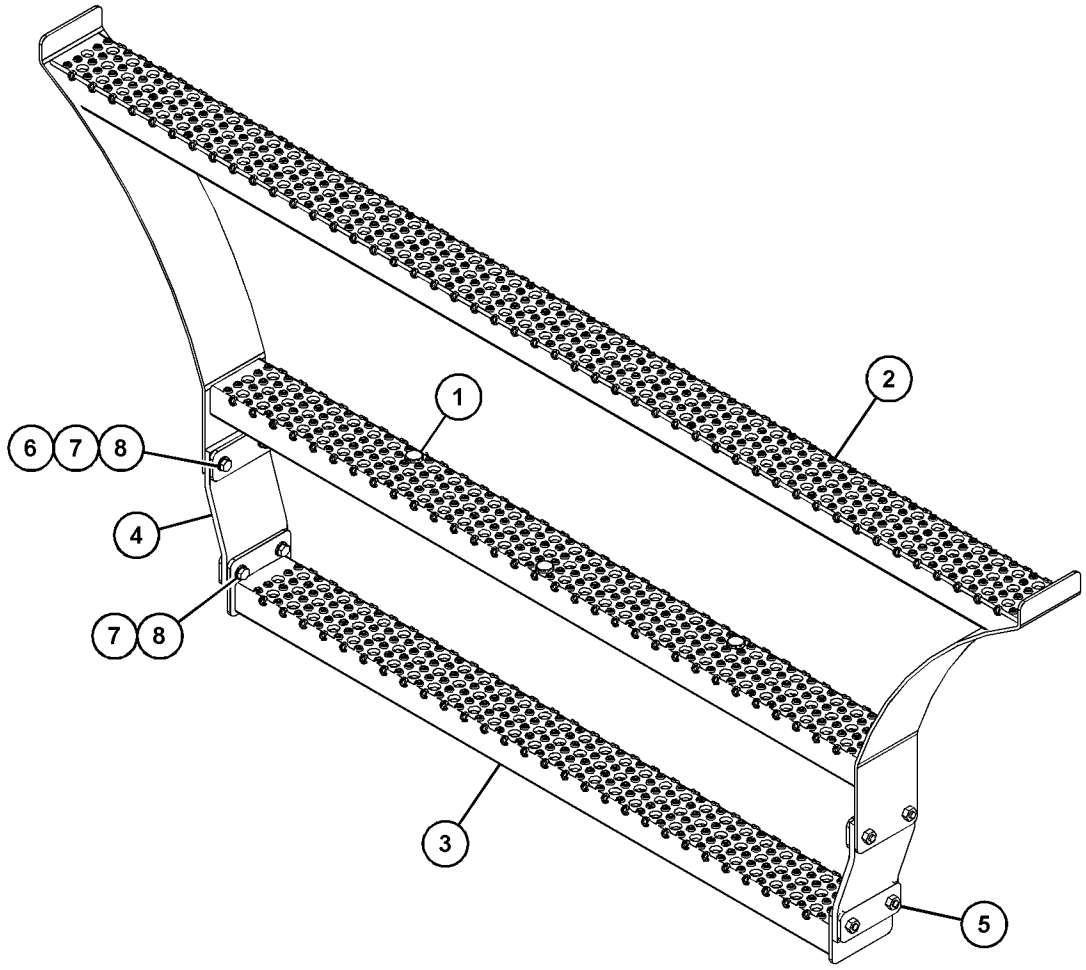

GRAPHIC #1 <END> g03661089

276-5548 SUPPORT GP-HOOD

S/N: CH91-UP
PART OF 338-8347 ENCLOSURE GP-FUEL TANK
ALSO AN ATTACHMENT

SMCS-7251 **i05496692**

NOTE	REF NO	GRAPHIC REF	PART NUMBER	QTY	PART NAME 1 2 3 4 5 6 (PRODUCT LEVEL)	SEE PAGE
	1	1	**116-6325**	1	SPRING-GAS	
	2	1	**259-6765**	1	BOLT-SPECIAL	
	3	1	**259-6772**	1	PLATE	
	4	1	**259-6783**	1	SUPPORT AS	
M	5	1	**5C-7261**	2	NUT (M8X1.25-THD)	
	6	1	**5P-4116**	4	WASHER-HARD (8.8X20.5X2-MM THK)	
M	7	1	**8T-4908**	2	BOLT (M8X1.25X25-MM)	

M - METRIC PART

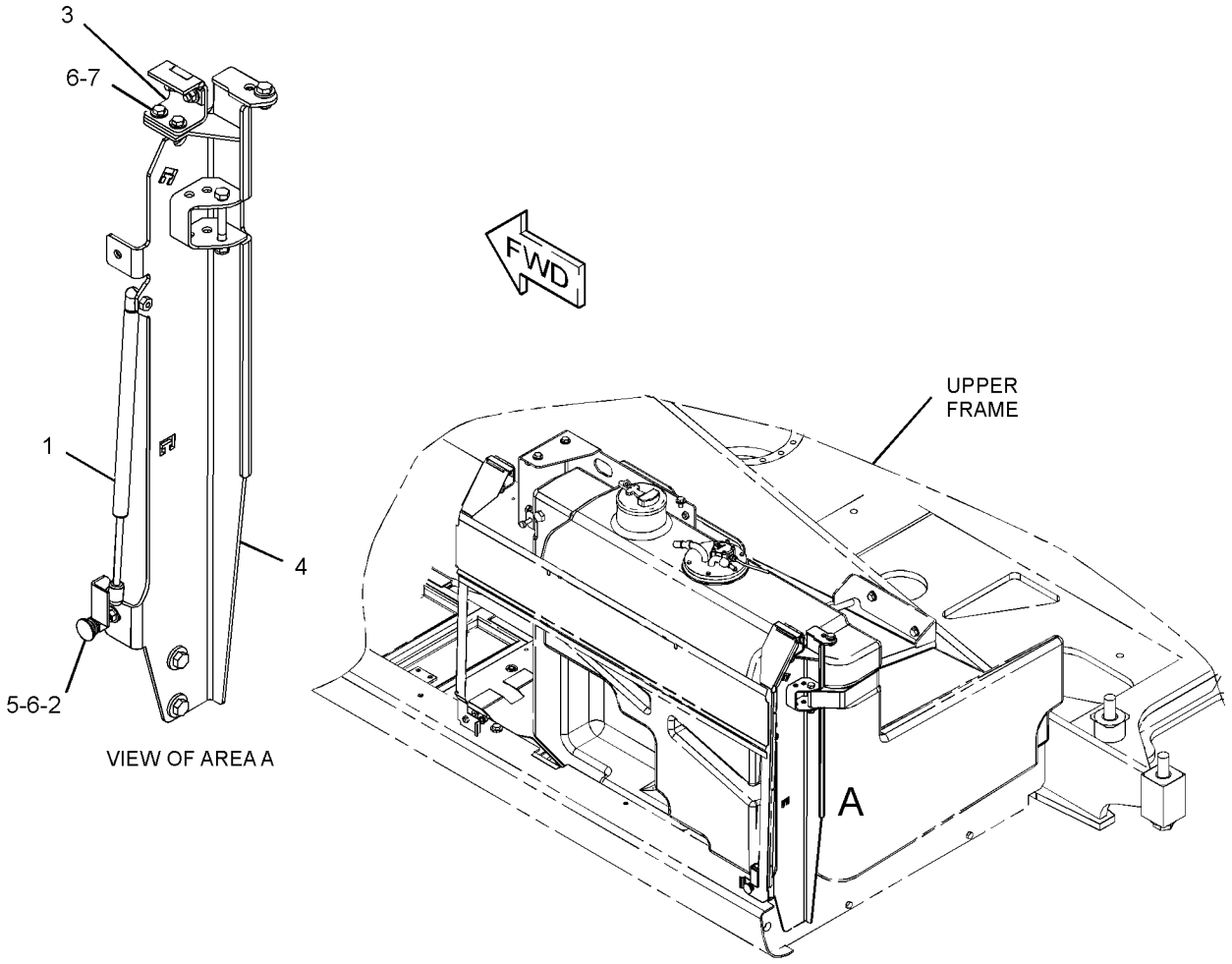

GRAPHIC #1 <END> g01390780

300-2280 WALKWAY GP

S/N: CH91-UP

PART OF 425-3925, 446-2738, 446-2745, 453-3004, 453-3005 VALVE & LINES AR AN ATTACHMENT

SMCS-7255 **i05492874**

NOTE	REF NO	GRAPHIC REF	PART NUMBER	QTY	PART NAME 1 2 3 4 5 6 (PRODUCT LEVEL)	SEE PAGE
	1	1	**5Y-2425**	3	WASHER (6.5X17.5X1.5-MM THK)	
	2	1	**117-0669**	1	SNUBBER	
	3	1	**117-0670**	1	BUFFER	
	4	1	**203-4464**	1	MOUNT-RESILIENT	
	5	1	**296-1857**	1	SPRING-GAS (WALKWAY)	
	6	1	**300-2256**	1	BRACKET	
	7	1	**300-2262**	2	PLATE	
	8	1	**300-2279**	1	WALKWAY AS	
		1	**254-9405**	2	HINGE AS	
M	9	1	**129-3178**	3	LOCKNUT (M6X1-THD)	
M	10	1	**5C-7261**	5	NUT (M8X1.25-THD)	
	11	1	**5P-4116**	2	WASHER-HARD (8.8X20.5X2-MM THK)	
M	12	1	**8T-4189**	2	BOLT (M8X1.25X20-MM)	
	13	1	**8T-4224**	5	WASHER-HARD (8.8X16X2-MM THK)	
M	14	1	**8T-4970**	1	BOLT (M6X1X14-MM)	
M	15	1	**8T-4971**	1	BOLT (M6X1X30-MM)	
M	16	1	**7Y-6190**	4	BOLT (M8X1.25X20-MM)	

M - METRIC PART

300-2280 **WALKWAY GP** (contd.) **i05492874**

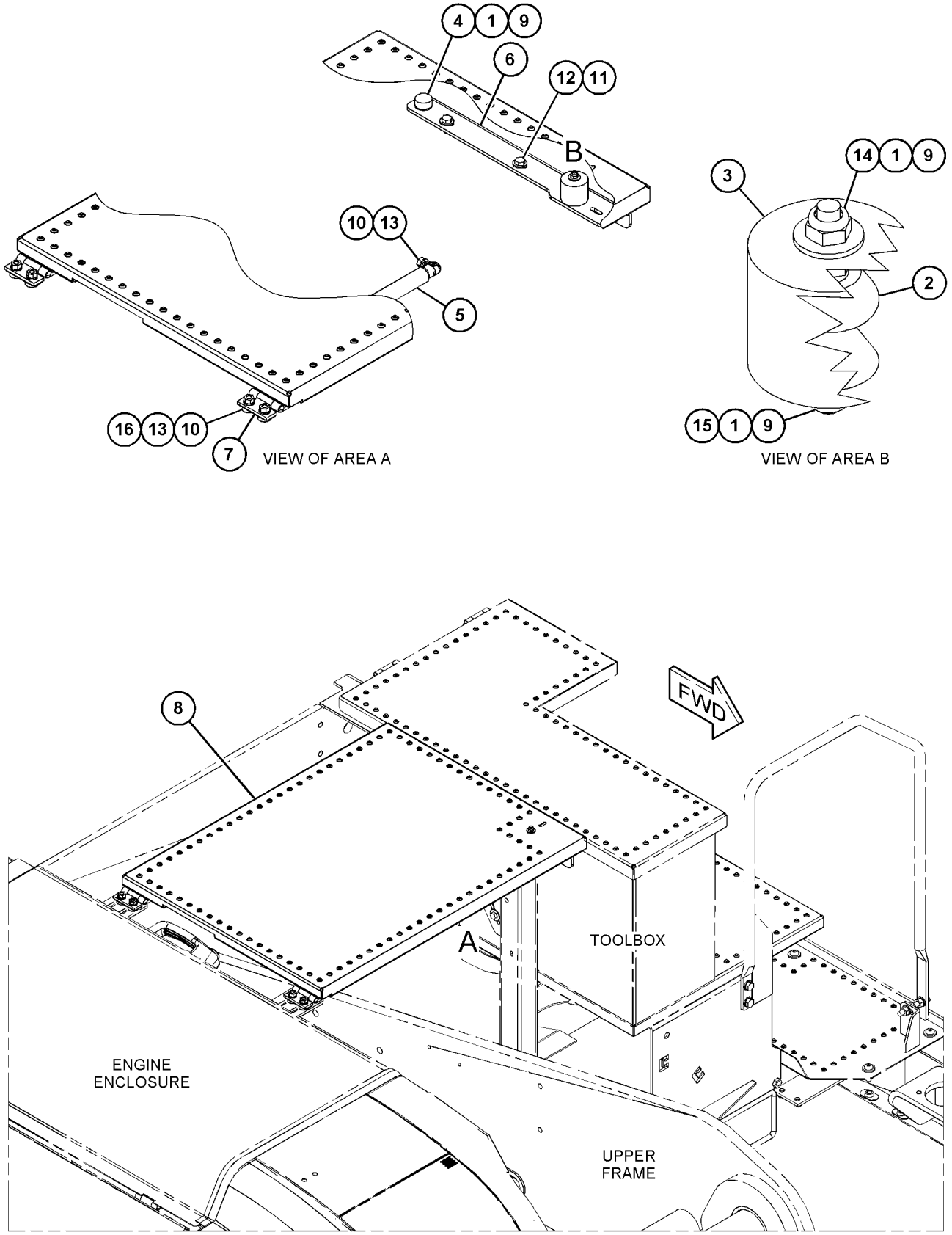

GRAPHIC #1 <END> g03480036

392-7776 WALKWAY GP

S/N: CH91-UP

PART OF 425-9134 VALVE & LINES AR

AN ATTACHMENT

SMCS-7255 **i05934574**

NOTE	REF NO	GRAPHIC REF	PART NUMBER	QTY	PART NAME 1 2 3 4 5 6 (PRODUCT LEVEL)	SEE PAGE
	1	1	**117-0669**	1	SNUBBER	
	2	1	**117-0670**	1	BUFFER	
	3	1	**203-4464**	1	MOUNT-RESILIENT	
	4	1	**296-1857**	1	SPRING-GAS (WALKWAY)	
	5	1	**300-2256**	1	BRACKET	
	6	1	**300-2262**	2	PLATE	
	7	1	**300-2274**	1	WALKWAY AS	
		1	**254-9405**	2	HINGE AS	
M	8	1	**129-3178**	3	LOCKNUT (M6X1-THD)	
M	9	1	**5C-7261**	5	NUT (M8X1.25-THD)	
	10	1	**5P-4116**	2	WASHER-HARD (8.8X20.5X2-MM THK)	
	11	1	**5Y-2425**	3	WASHER (6.5X17.5X1.5-MM THK)	
M	12	1	**8T-4189**	2	BOLT (M8X1.25X20-MM)	
	13	1	**8T-4224**	5	WASHER-HARD (8.8X16X2-MM THK)	
M	14	1	**8T-4970**	1	BOLT (M6X1X14-MM)	
M	15	1	**8T-4971**	1	BOLT (M6X1X30-MM)	
M	16	1	**9X-8290**	4	BOLT (M8X1.25X20-MM)	

M - METRIC PART

392-7776 **WALKWAY GP** (contd.) **i05934574**

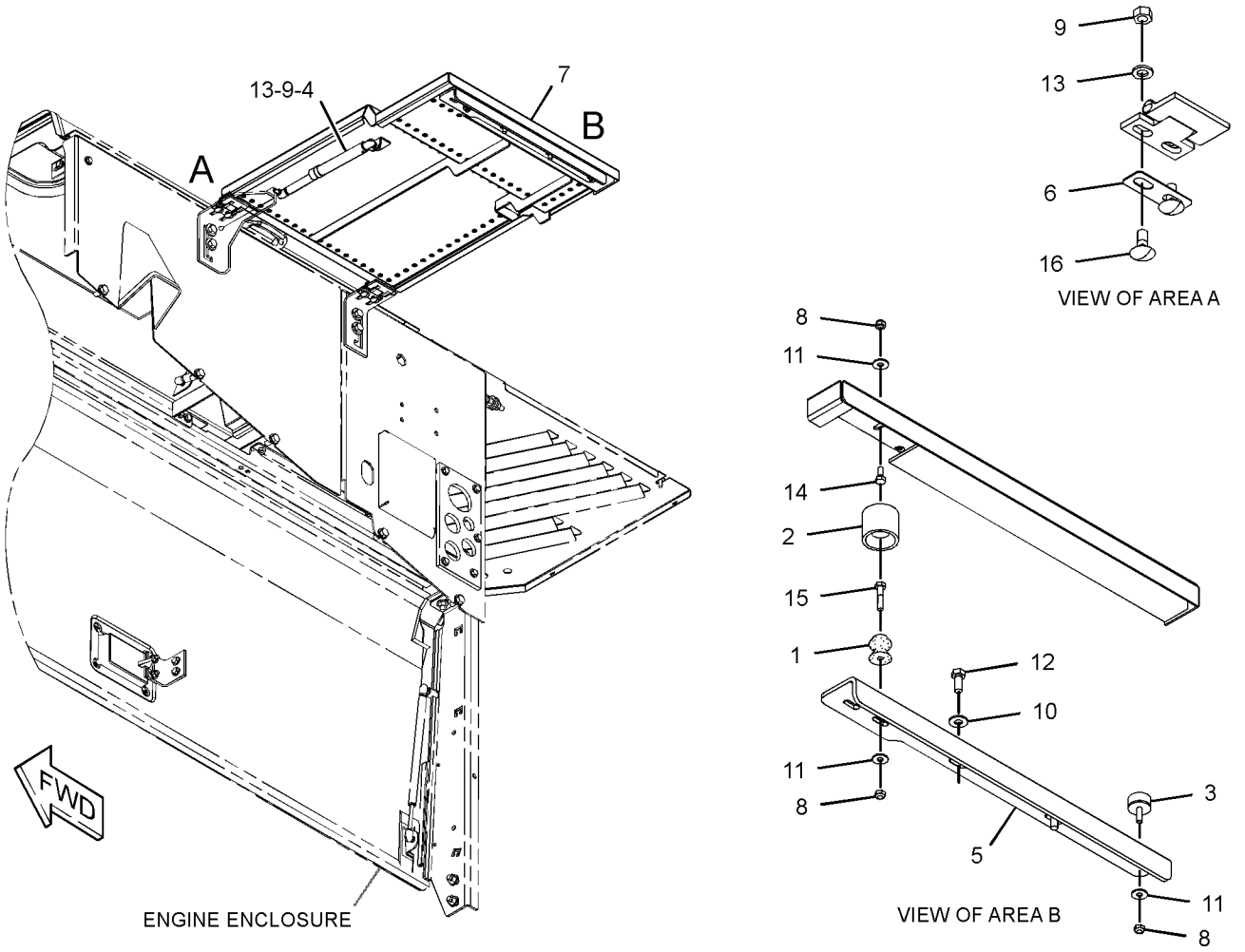

GRAPHIC #1 <END> g03067118

356-9592 FRAME AS-UNDERCARRIAGE—BLADE, STABILIZER

S/N: CH91-UP

PART OF 341-9142 FRAME GP-UNDERCARRIAGE

AN ATTACHMENT

SMCS-4150, 7062 **i05925966**

NOTE	REF NO	GRAPHIC REF	PART NUMBER	QTY	PART NAME 1 2 3 4 5 6 (PRODUCT LEVEL)	SEE PAGE
	1	1	**8U-1242**	2	PLATE	
	2	1	**127-9580**	1	ROD	
	3	1	*341-9196*	1	FRAME AS-STABILIZER	
		1	**127-9580**	1	ROD	
	4	1	*358-2135*	1	FRAME AS-UNDERCARRIAGE	
		1	**5W-1112**	3	PLATE	
		1	**8U-1242**	4	PLATE	
		1	**127-9580**	14	ROD	
M		1	**213-9908**	1	BOLT (M8X1.25X25-MM)	
	5	1	*364-7018*	1	PLATE AS	
		1	**127-9580**	1	ROD	

M - METRIC PART

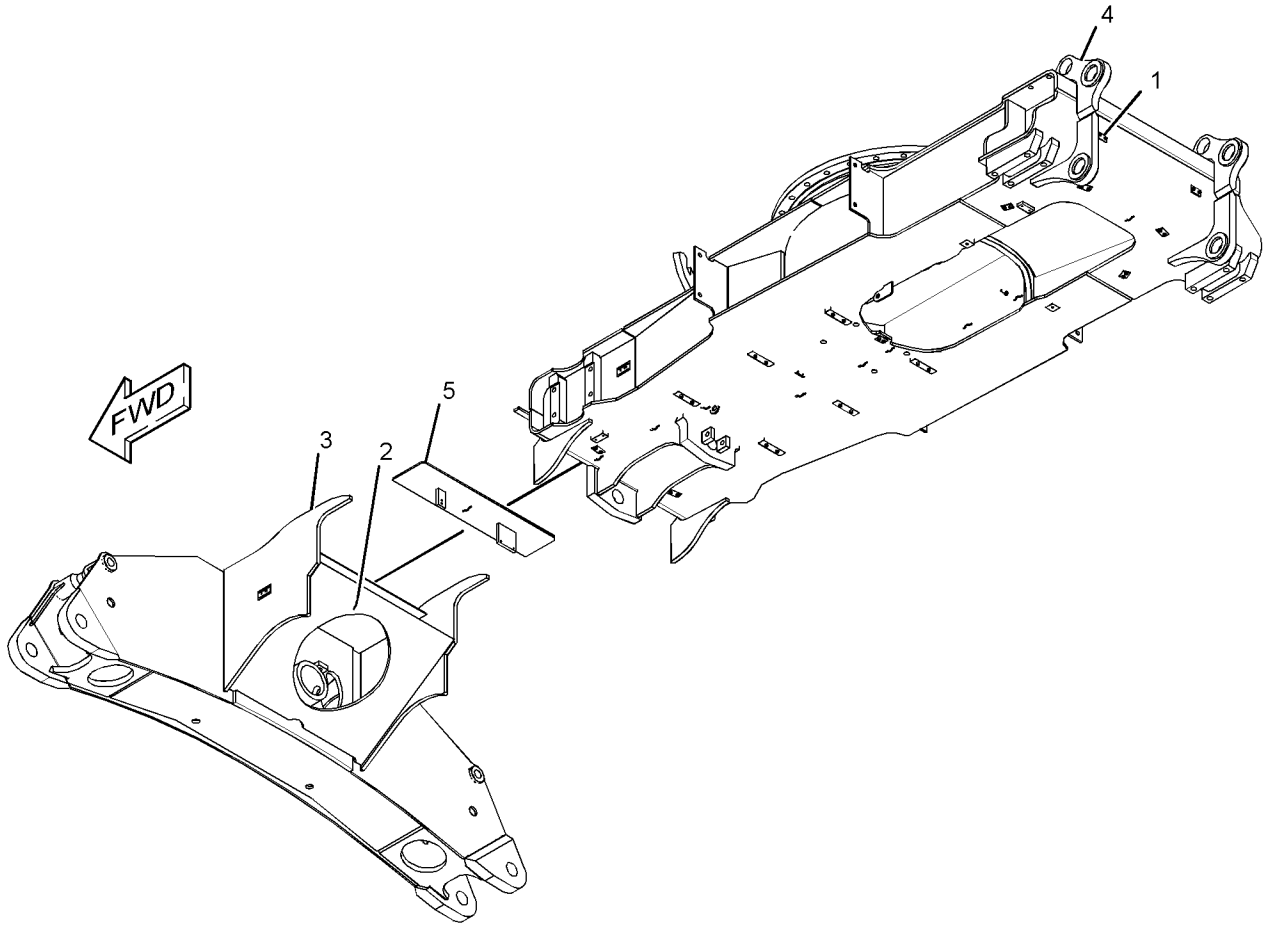

GRAPHIC #1 <END> g02444437

341-9142 FRAME GP-UNDERCARRIAGE–BLADE, STABILIZER

S/N: CH91-UP
PART OF 426-2550 UNDERCARRIAGE AR
AN ATTACHMENT

SMCS-4150 **i05925962**

NOTE	REF NO	GRAPHIC REF	PART NUMBER	QTY	PART NAME 1 2 3 4 5 6 (PRODUCT LEVEL)	SEE PAGE
	1	1	**096-6095**	1	PLUG	
	2	1	**117-9896**	4	SLEEVE	
Y	3	1	**356-9592**	1	FRAME AS-UNDERCARRIAGE (BLADE, STABILIZER)	319
	4	1	**095-1608**	1	SEAL-O-RING	

Y - SEPARATE ILLUSTRATION

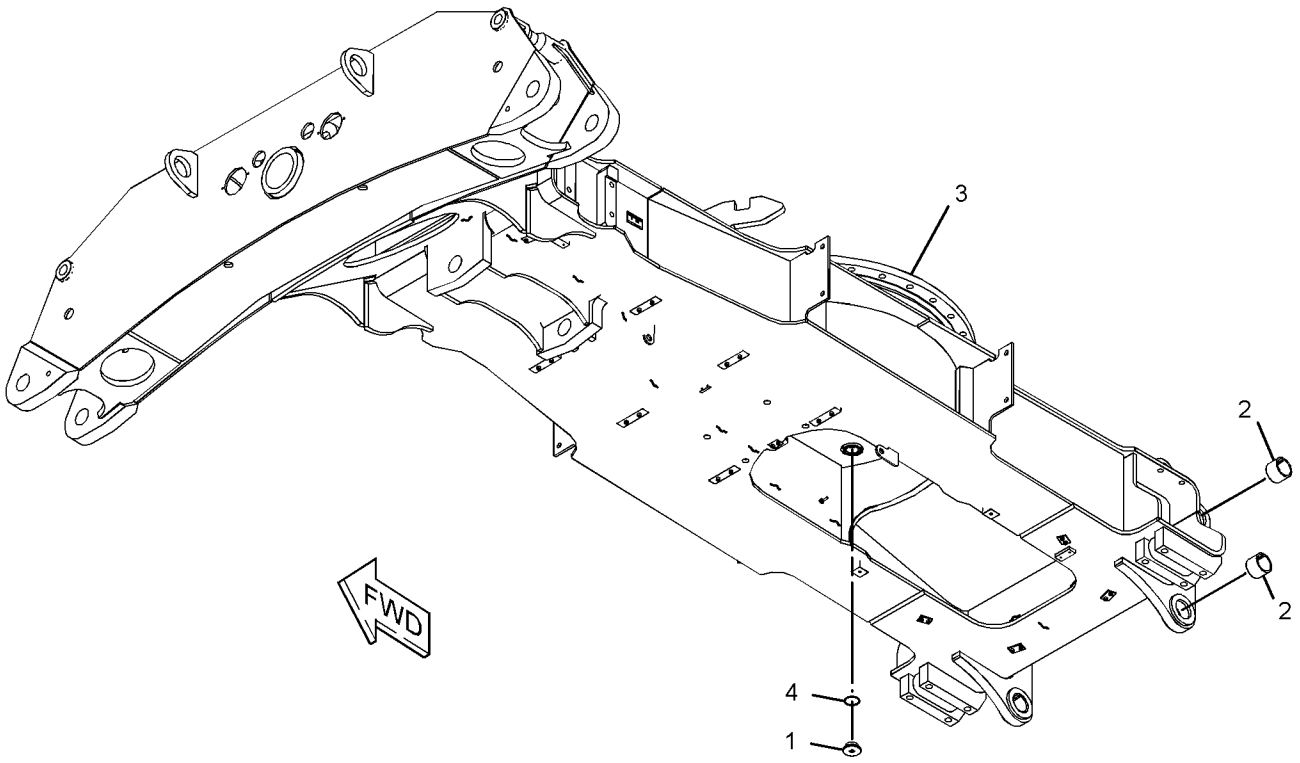

GRAPHIC #1 <END> g02424381

341-9145 FRAME GP-UNDERCARRIAGE—FRONT BLADE, REAR STABILIZER

S/N: CH91-UP

PART OF 426-2551 UNDERCARRIAGE AR

AN ATTACHMENT

SMCS-4150 **i05922579**

NOTE	REF NO	GRAPHIC REF	PART NUMBER	QTY	PART NAME 1 2 3 4 5 6 (PRODUCT LEVEL)	SEE PAGE
	1	1	**096-6095**	1	PLUG	
	2	1	**117-9896**	4	SLEEVE	
	3	1	**356-9593**	1	FRAME AS-UNDERCARRIAGE	
		1	**5W-1112**	3	PLATE	
		1	**8U-1242**	6	PLATE	
		1	**127-9580**	16	ROD	
M		1	**213-9908**	1	BOLT (M8X1.25X25-MM)	
	4	1	**095-1608**	1	SEAL-O-RING	

M - METRIC PART

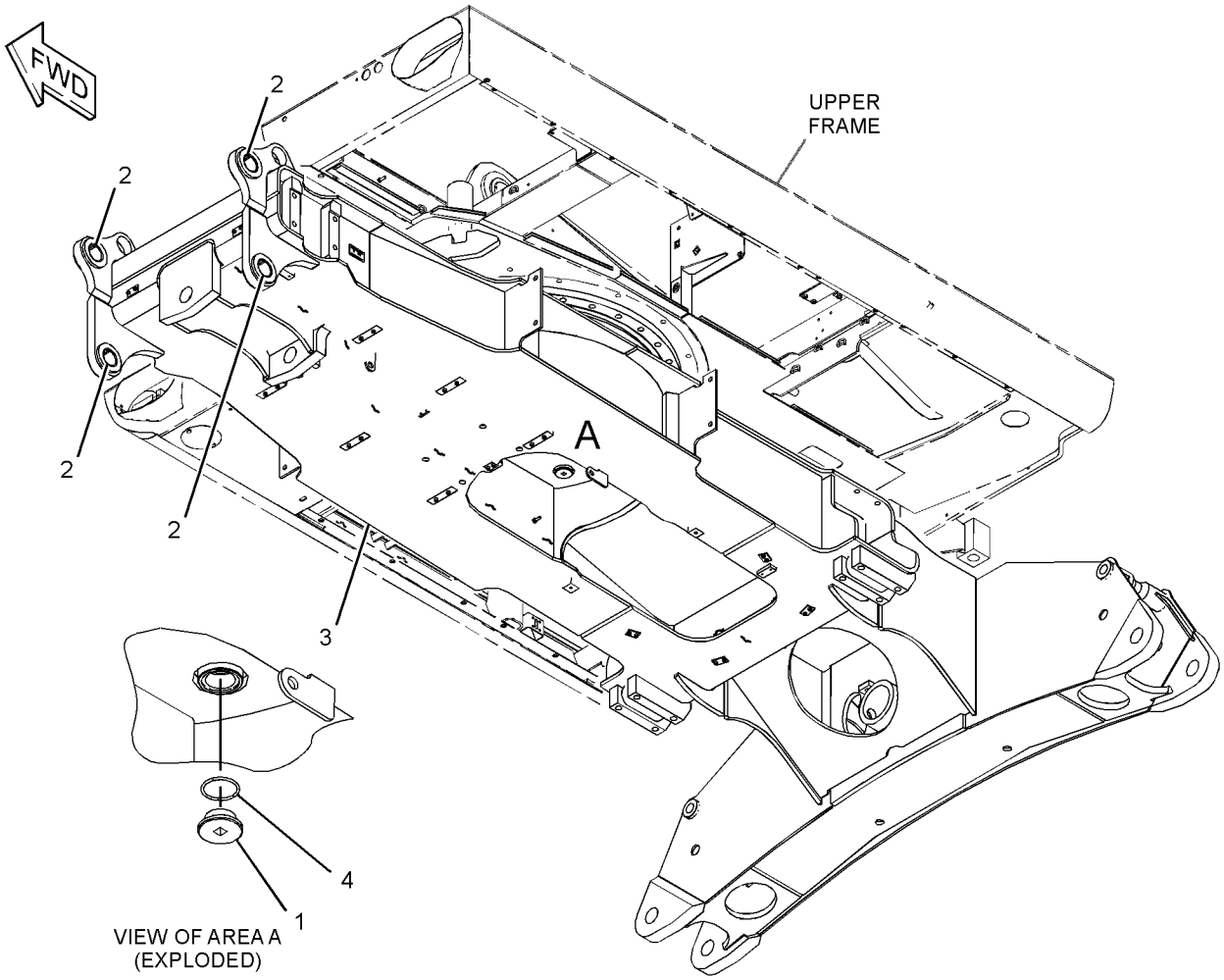

GRAPHIC #1 <END> g02396254

426-2550 UNDERCARRIAGE AR

S/N: CH91-UP

AN ATTACHMENT

SMCS-4150 **i06249960**

NOTE	PART NUMBER	QTY	PART NAME 1 2 3 4 5 6 (PRODUCT LEVEL)	SEE PAGE
Y	*454-8880*	1	BLADE AR	758
Y	*341-9142*	1	FRAME GP-UNDERCARRIAGE (BLADE, STABILIZER)	320
Y	*416-6996*	1	LINES GP-CYLINDER (BLADE, REAR)	466
			—OR—	
Y	*479-4266*	1	LINES GP-CYLINDER (REAR BLADE)	472
Y	*455-4597*	1	STABILIZER AR	605
Y	*337-5778*	1	WIRING GP-STABILIZER (CONSOLE)	218
Y	*377-1899*	1	WIRING GP-STABILIZER (UNDERCARRIAGE)	219

Y - SEPARATE ILLUSTRATION

<END>

426-2551 UNDERCARRIAGE AR—FRONT BLADE, REAR STABILIZER

S/N: CH91-UP

PART OF 453-8185, 473-2841, 517-3262 DISTRIBUTION AR

AN ATTACHMENT

SMCS-4150 **i06249971**

NOTE	PART NUMBER	QTY	PART NAME 1 2 3 4 5 6 (PRODUCT LEVEL)	SEE PAGE
Y	*453-7132*	1	BLADE AR	758
Y	*341-9145*	1	FRAME GP-UNDERCARRIAGE (FRONT BLADE, REAR STABILIZER)	321
Y	*416-6998*	1	LINES GP-CYLINDER	468
			—OR—	
Y	*479-4263*	1	LINES GP-CYLINDER	470
Y	*354-7130*	1	STABILIZER AR (REAR)	605
Y	*337-5778*	1	WIRING GP-STABILIZER (CONSOLE)	218
Y	*377-1899*	1	WIRING GP-STABILIZER (UNDERCARRIAGE)	219

Y - SEPARATE ILLUSTRATION

<END>

237-1925 ACCUMULATOR GP—UNCHARGED

S/N: CH91-UP

FIELD REPLACEMENT FOR 235-5646—PAGE: 325

SMCS-5077 **i05563812**

NOTE	REF NO	GRAPHIC REF	PART NUMBER	QTY	PART NAME 1 2 3 4 5 6 (PRODUCT LEVEL)	SEE PAGE
	1	1	**159-4700**	1	FILM-WARNING (HIGH PRESSURE CYLINDER)	

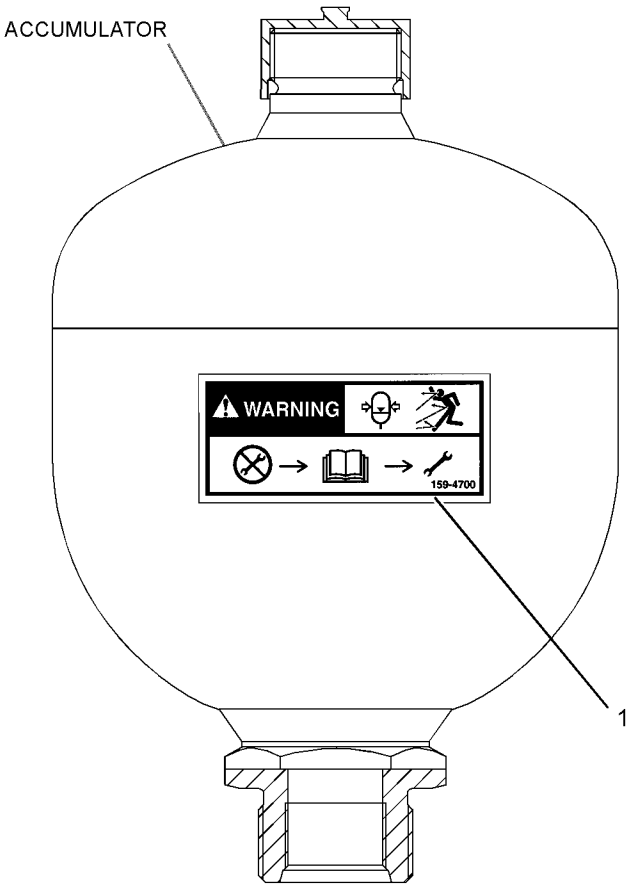

GRAPHIC #1 <END> g01290693

340-3267 ACCUMULATOR GP—CHARGED

S/N: CH91-UP
FIELD REPLACEMENT ORDER 340-3268—PAGE: 328
PART OF 431-7217 LINES GP-RIDE CONTROL
AN ATTACHMENT

SMCS-5077 **i05519558**

NOTE	REF NO	GRAPHIC REF	PART NUMBER	QTY	PART NAME 1 2 3 4 5 6 (PRODUCT LEVEL)	SEE PAGE
	1	1	**349-1178**	1	SENSOR-PRESSURE (RIDE CONTROL)	
	2	1	**6V-5320**	1	CONNECTOR	
	3	1	**3K-0360**	2	SEAL-O-RING	
					AVAILABLE REPAIR KIT(S):	
			321-1233	1	KIT-SEAL (ACCUMULATOR)	
					(INCLUDES SEALS, O-RING SEALS, CAP, BACK UP RINGS & PLUG BOLT)	

GRAPHIC #1 <END> g02418636

235-5646 ACCUMULATOR GP-BRAKE—CHARGED

S/N: CH91-UP
FIELD REPLACEMENT ORDER 237-1925—PAGE: 323
PART OF 254-2663 LINES GP-PILOT
ALSO AN ATTACHMENT

SMCS-4263, 4264, 4293 **i05535191**

NOTE	REF NO	GRAPHIC REF	PART NUMBER	QTY	PART NAME 1 2 3 4 5 6 (PRODUCT LEVEL)	SEE PAGE
					(NO SERVICED PARTS)	

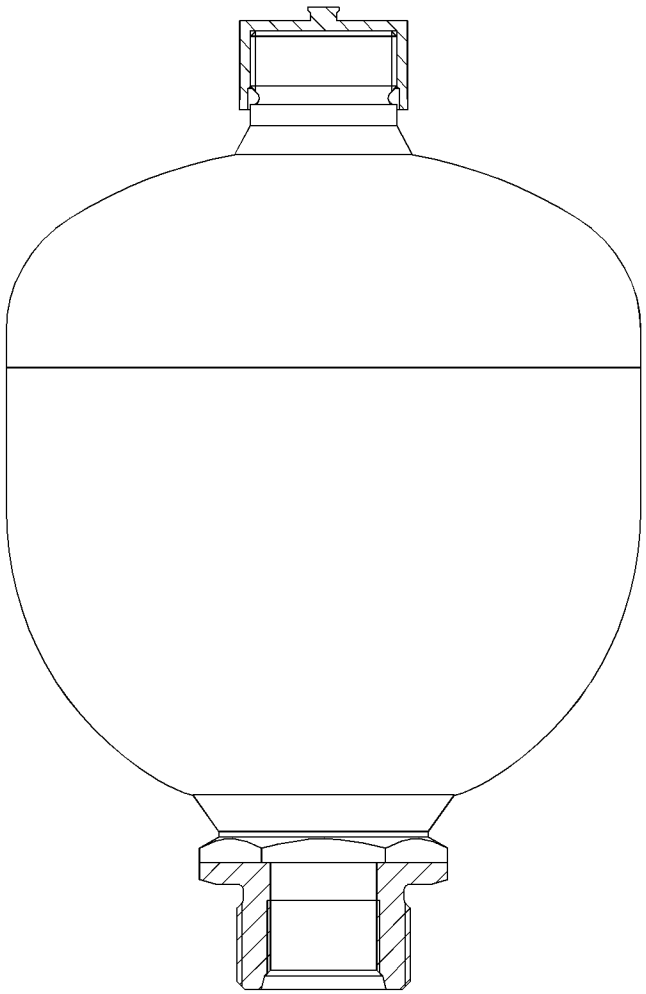

GRAPHIC #1 <END> g01316639

255-8548 ACCUMULATOR GP-HYDRAULIC—UNCHARGED

S/N: CH91-UP

SMCS-5077 **i05563874**

NOTE	REF NO	GRAPHIC REF	PART NUMBER	QTY	PART NAME 1 2 3 4 5 6 (PRODUCT LEVEL)	SEE PAGE
	1	1	**159-4700**	1	FILM-WARNING (HIGH PRESSURE CYLINDER)	

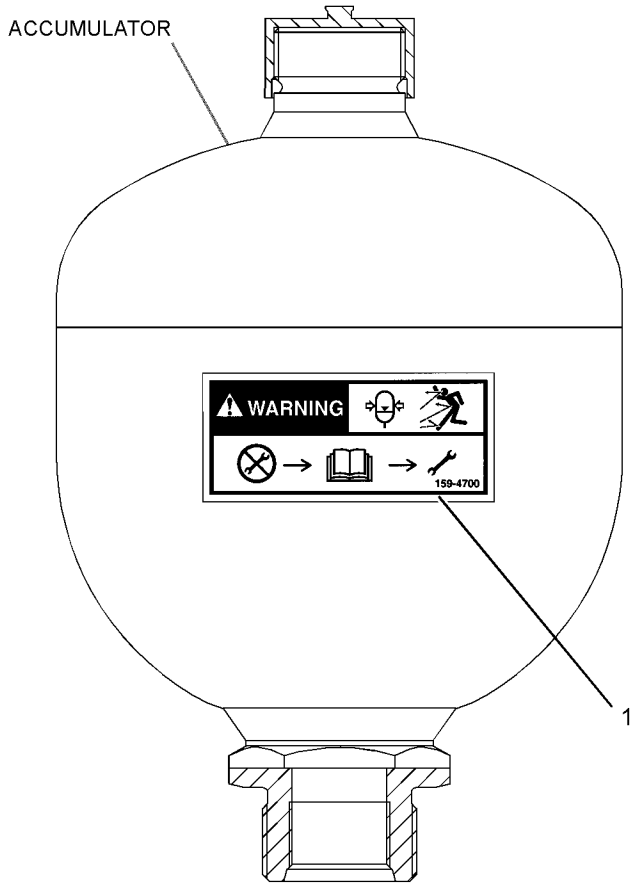

GRAPHIC #1 <END> g01290693

317-8429 ACCUMULATOR GP-HYDRAULIC—CHARGED

S/N: CH91-UP
FIELD REPLACEMENT ORDER 255-8548—PAGE: 326
PART OF 461-5997 VALVE GP-PILOT
ALSO AN ATTACHMENT

SMCS-5077 **i05561251**

NOTE	REF NO	GRAPHIC REF	PART NUMBER	QTY	PART NAME 1 2 3 4 5 6 (PRODUCT LEVEL)	SEE PAGE
					(NO SERVICED PARTS)	

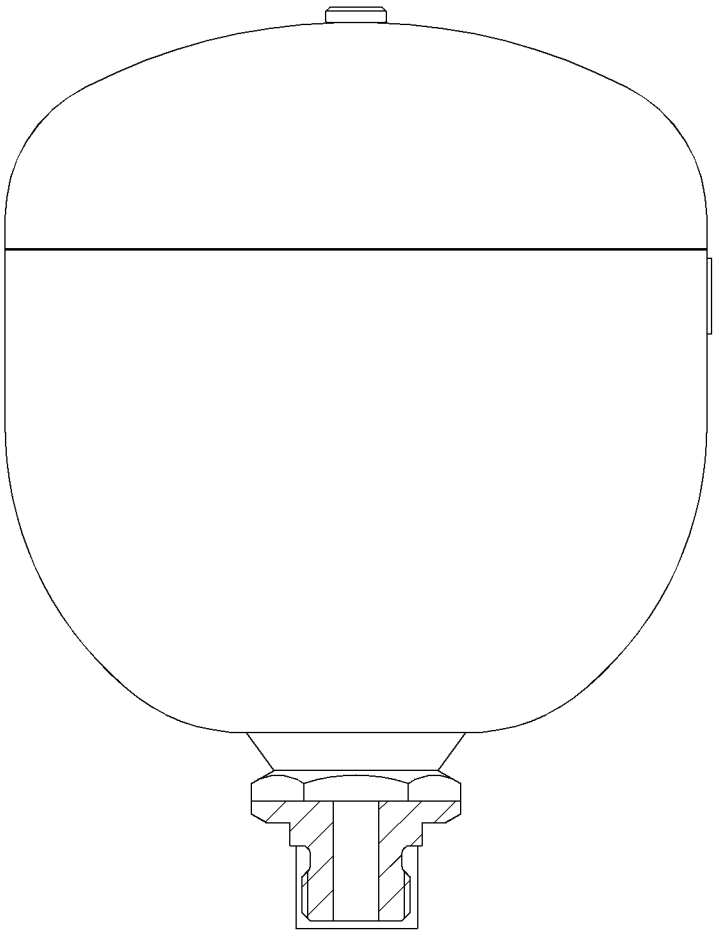

GRAPHIC #1 <END> g03089436

340-3268 ACCUMULATOR GP-HYDRAULIC—UNCHARGED

S/N: CH91-UP

SMCS-5077 **i05572450**

NOTE	REF NO	GRAPHIC REF	PART NUMBER	QTY	PART NAME 1 2 3 4 5 6 (PRODUCT LEVEL)	SEE PAGE
	1	1	**349-1178**	1	SENSOR-PRESSURE (RIDE CONTROL)	
	2	1	**6V-5320**	1	CONNECTOR	
	3	1	**3K-0360**	2	SEAL-O-RING	
F			**159-4700**	1	FILM-WARNING (HIGH PRESSURE CYLINDER)	
					(ON SIDE OF ACCUMULATOR)	
					AVAILABLE REPAIR KIT(S):	
			321-1233	1	KIT-SEAL (ACCUMULATOR)	
					(INCLUDES SEALS, O-RING SEALS, CAP, BACKUP RINGS & BOLT)	

F - NOT SHOWN

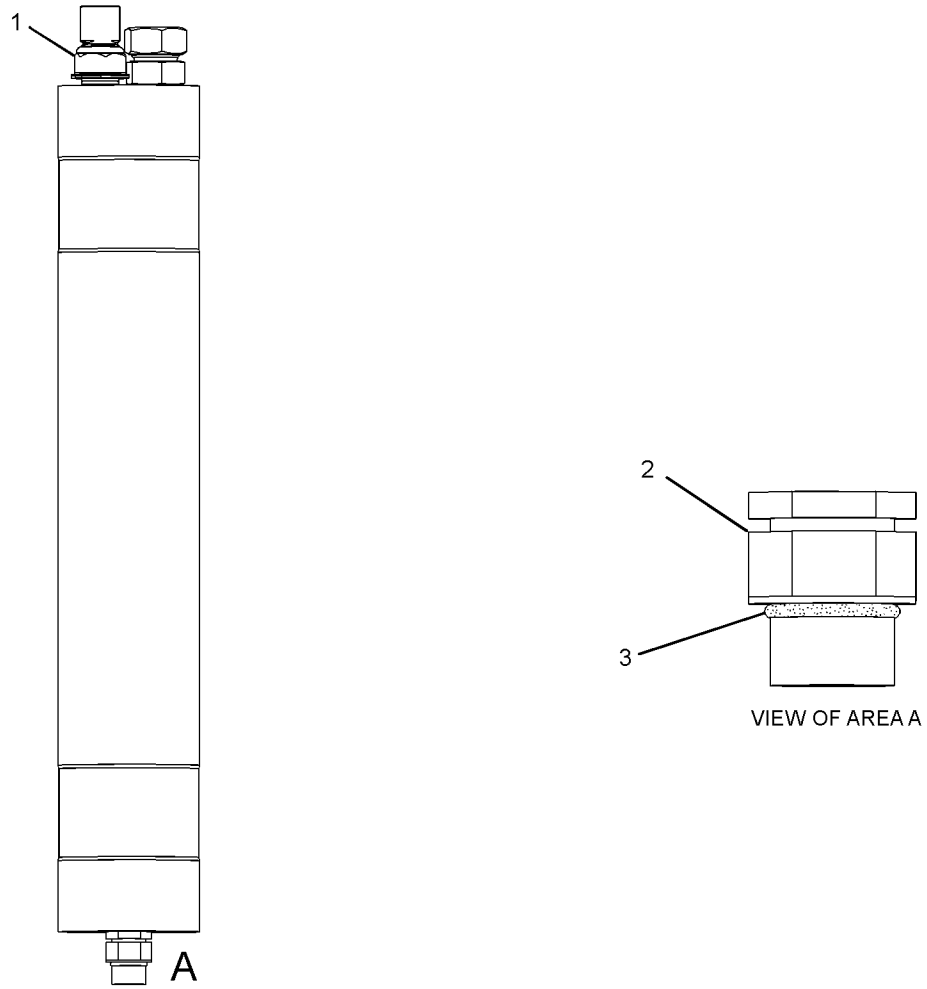

GRAPHIC #1 <END> g02396543

265-3742 ACTUATOR GP-HYDRAULIC

S/N: CH91-UP
PART OF 340-6790 VALVE GP-MAIN CONTROL
ALSO AN ATTACHMENT

SMCS-5078 **i05510369**

NOTE	REF NO	GRAPHIC REF	PART NUMBER	QTY	PART NAME 1 2 3 4 5 6 (PRODUCT LEVEL)	SEE PAGE
M	1	1	**189-9977**	1	SETSCREW (M12X1X38-MM)	
M	2	1	**114-3025**	1	NUT (M12X1-THD)	
M	3	1	**114-2999**	1	NUT-CAP (M12X1-THD)	
	4	1	**061-8639**	2	SEAL-O-RING	

M - METRIC PART

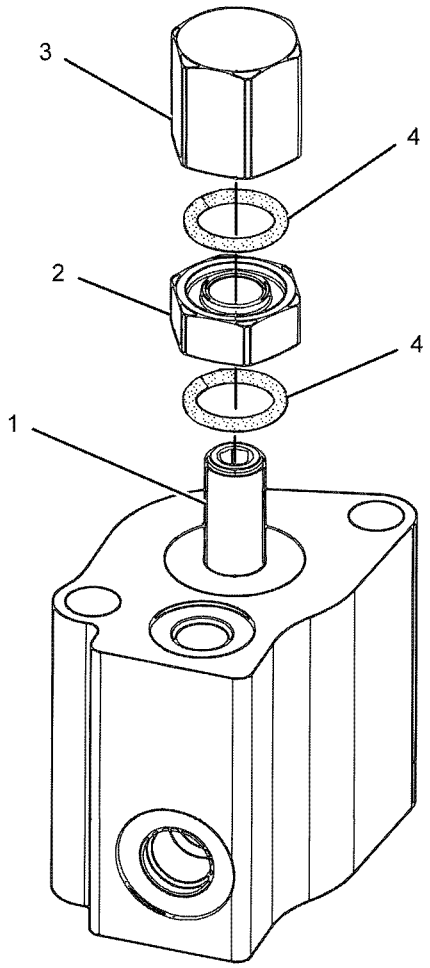

GRAPHIC #1 <END> g01127040

309-0703 ACTUATOR GP-HYDRAULIC

S/N: CH91-UP
PART OF 340-6790 VALVE GP-MAIN CONTROL
ALSO AN ATTACHMENT

SMCS-5078 **i05510370**

NOTE	REF NO	GRAPHIC REF	PART NUMBER	QTY	PART NAME 1 2 3 4 5 6 (PRODUCT LEVEL)	SEE PAGE
	1	1	**309-2799**	1	STOP	
M	2	1	**114-3025**	1	NUT (M12X1-THD)	
M	3	1	**114-2999**	1	NUT-CAP (M12X1-THD)	
	4	1	**061-8639**	2	SEAL-O-RING	

M - METRIC PART

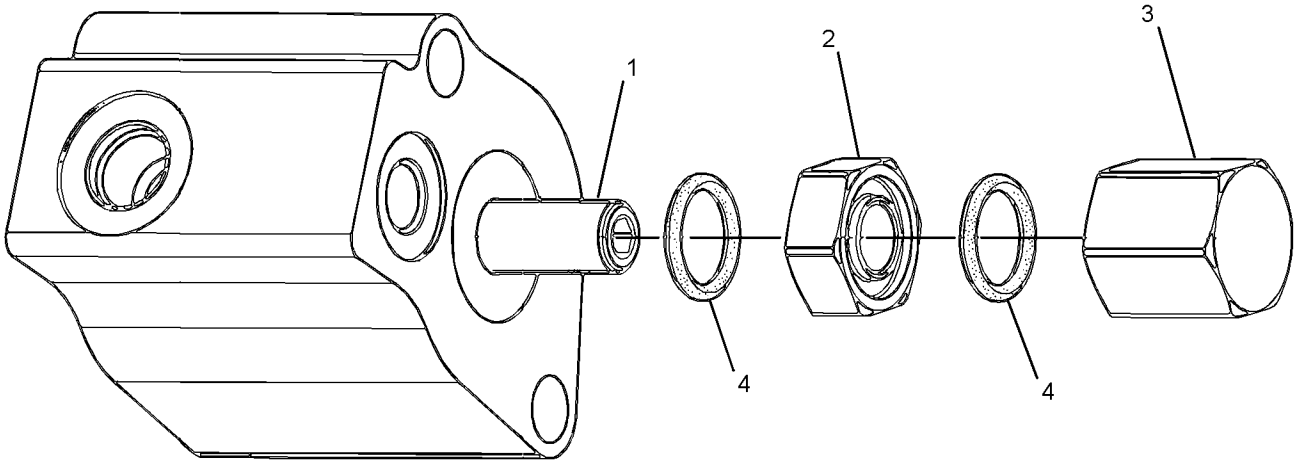

GRAPHIC #1 <END> g01369254

314-8467 ACTUATOR GP-HYDRAULIC

S/N: CH91-UP
PART OF 340-6790 VALVE GP-MAIN CONTROL
ALSO AN ATTACHMENT

SMCS-5078 **i05510335**

NOTE	REF NO	GRAPHIC REF	PART NUMBER	QTY	PART NAME 1 2 3 4 5 6 (PRODUCT LEVEL)	SEE PAGE
	1	1	**309-2799**	1	STOP	
M	2	1	**114-3025**	1	NUT (M12X1-THD)	
M	3	1	**114-2999**	1	NUT-CAP (M12X1-THD)	
	4	1	**061-8639**	2	SEAL-O-RING	

M - METRIC PART

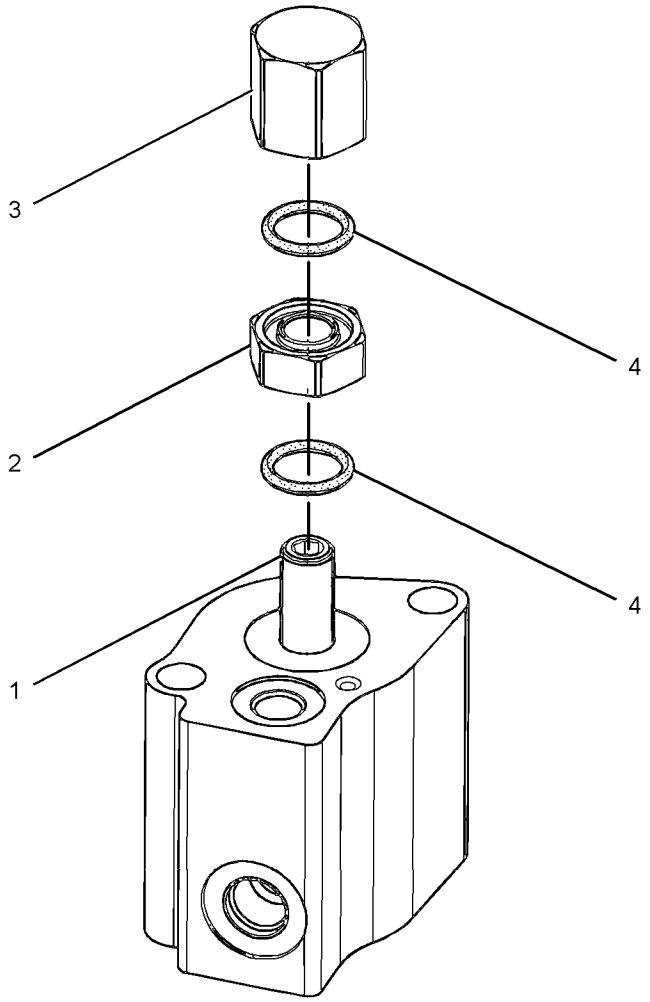

GRAPHIC #1 <END> g01677940

146-6553 ACTUATOR GP-PUMP

S/N: CH91-UP
PART OF 432-8567 PUMP GP-MAIN HYDRAULIC
ALSO AN ATTACHMENT

SMCS-5078 **i05519832**

NOTE	REF NO	GRAPHIC REF	PART NUMBER	QTY	PART NAME 1 2 3 4 5 6 (PRODUCT LEVEL)	SEE PAGE
	1	1	**125-9095**	1	PISTON	
B	2	1	**178-2844**	1	ROD (130-MM LG)	
B	3	1	**146-6555**	1	ROD (129.8-MM LG)	
B	4	1	**146-6554**	1	ROD (129.4-MM LG)	
B	5	1	**117-5917**	1	ROD (129.6-MM LG)	
	6	1	**117-5920**	1	SPRING	
	7	1	**125-9096**	1	BUSHING	

B - USE AS REQUIRED

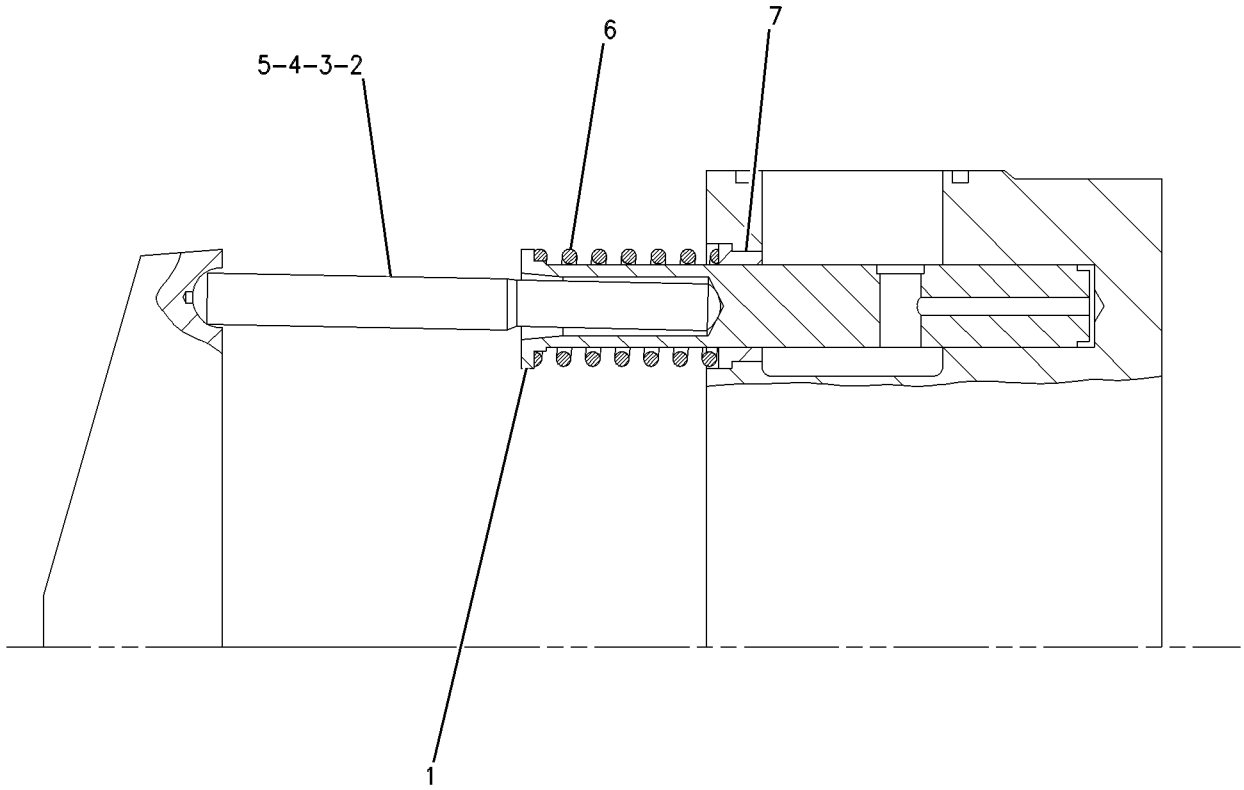

GRAPHIC #1 <END> g00646372

178-2823 ACTUATOR GP-PUMP

S/N: CH91-UP

PART OF 432-8567 PUMP GP-MAIN HYDRAULIC

ALSO AN ATTACHMENT

SMCS-5078 **i05519833**

NOTE	REF NO	GRAPHIC REF	PART NUMBER	QTY	PART NAME 1 2 3 4 5 6 (PRODUCT LEVEL)	SEE PAGE
	1	1	**125-9108**	1	PISTON	
B	2	1	**117-5925**	1	ROD (119.5-MM LG)	
B	3	1	**117-5924**	1	ROD (119.1-MM LG)	
B	4	1	**117-5923**	1	ROD (119.3-MM LG)	
	5	1	**117-5926**	1	SPRING	

B - USE AS REQUIRED

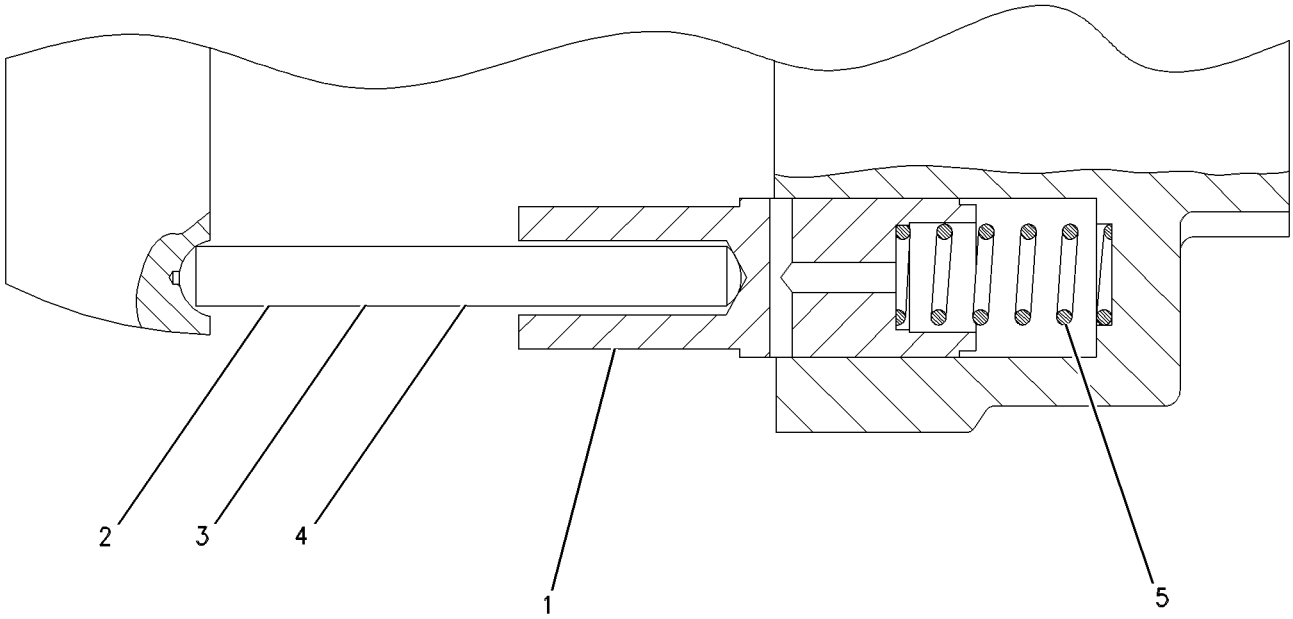

GRAPHIC #1 <END> g00646829

275-8158 BARREL GP-MOTOR

S/N: CH91-UP
PART OF 275-8157 ROTATING GP-MOTOR
ALSO AN ATTACHMENT

SMCS-5058 **i05513209**

NOTE	REF NO	GRAPHIC REF	PART NUMBER	QTY	PART NAME 1 2 3 4 5 6 (PRODUCT LEVEL)	SEE PAGE
	1	1	**275-8160**	1	BARREL	
	2	1	**275-8161**	1	PLATE-CONTROL	
	3	1	**124-9853**	1	PIN-CENTER	
	4	1	**275-8162**	9	PISTON AS	
					(EACH INCLUDES)	
		1	**275-8165**	2	RING-PISTON	
B	5	1	**124-9855**	1	SHIM (4.5-MM THK)	
B			**124-9856**	1	SHIM (4.6-MM THK)	
B			**124-9857**	1	SHIM (4.7-MM THK)	
B			**124-9858**	1	SHIM (4.8-MM THK)	
B			**124-9859**	1	SHIM (4.9-MM THK)	
B			**124-9860**	1	SHIM (5-MM THK)	
	6	1	**275-8163**	1	SPRING	
	7	1	**275-8164**	1	PLATE-RETAINING	
M	8	1	**253-3982**	18	SCREW-SPECIAL (M5X0.8X8-MM)	

B - USE AS REQUIRED
M - METRIC PART

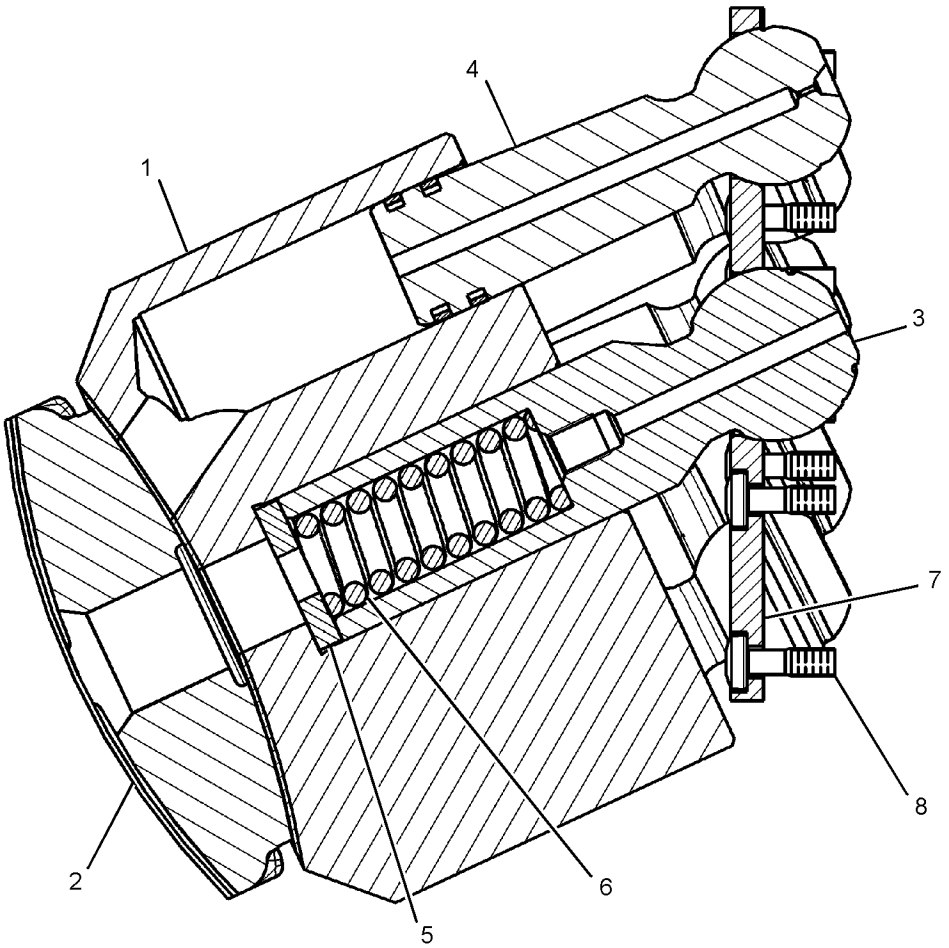

GRAPHIC #1 <END> g01290675

136-7701 BARREL GP-PUMP

S/N: CH91-UP
PART OF 190-8199 PUMP GP-PISTON
ALSO AN ATTACHMENT

SMCS-5070 **i05970345**

NOTE	REF NO	GRAPHIC REF	PART NUMBER	QTY	PART NAME 1 2 3 4 5 6 (PRODUCT LEVEL)	SEE PAGE
	1	1	**136-7703**	1	CYLINDER AS	
	2	1	**117-7238**	9	PISTON	
	3	1	**117-7239**	1	SPRING SET	
	4	1	**117-7240**	1	CRADLE	
	5	1	**117-7241**	1	PLATE	
	6	1	**117-7242**	1	SHAFT-DRIVE	
	7	1	**1G-3410**	1	ROD	
	8	1	**112-4657**	1	PIN	
	9	1	**122-9068**	1	ROD	
B	10	1	**117-7245**	1	SHIM (1.2-MM THK)	
B	11	1	**117-7246**	1	SHIM (1-MM THK)	
B	12	1	**117-7247**	1	SHIM (0.8-MM THK)	
B	13	1	**117-7248**	1	SHIM (0.6-MM THK)	
	14	1	**117-7249**	1	PLATE-RETAINER	
	15	1	**117-7250**	1	RETAINER	
	16	1	**125-9134**	1	BEARING AS	
B	17	1	**122-9070**	2	SHIM (3-MM THK)	
	18	1	**122-9071**	1	SPRING	
	19	1	**117-7251**	1	BEARING	
	20	1	**340-5800**	1	BEARING AS-ROLLER	
	21	1	**6V-5200**	1	RING-RETAINING	
	22	1	**095-0941**	2	RING-RETAINING	
	23	1	**194-1983**	1	SEAL-SHAFT	
	24	1	**6V-7723**	1	RING-RETAINING	

B - USE AS REQUIRED

136-7701 **BARREL GP-PUMP** (contd.) **i05970345**

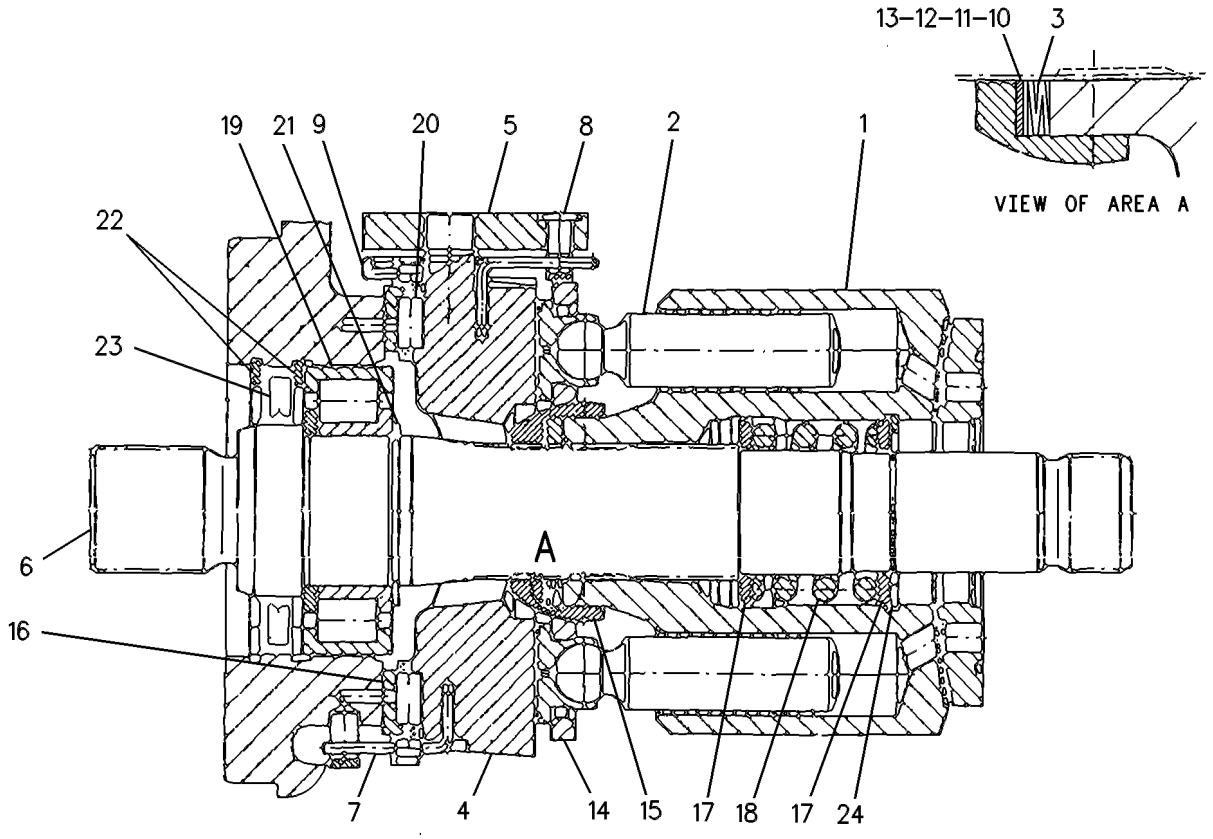

GRAPHIC #1 <END> g00247501

425-0196 BREATHER GP

S/N: E7A1-UP
PART OF 446-6728 ENGINE AR-PRIMARY
ALSO AN ATTACHMENT

SMCS-5056 **i05938522**

NOTE	REF NO	GRAPHIC REF	PART NUMBER	QTY	PART NAME 1 2 3 4 5 6 (PRODUCT LEVEL)	SEE PAGE
M	1	1	**124-3815**	3	BOLT (M8X1.25X16-MM)	
	2	1	**5V-9155**	1	CLAMP-HOSE	
	3	1	**9M-7958**	1	CLAMP-HOSE	
	4	1	**363-5813**	1	CLAMP-HOSE	
	5	1	**316-9351**	1	MOUNTING-CABLE TIE	
	6	1	**424-0566**	1	HOSE	
	7	1	**424-3214**	1	BASE AS-OIL FILTER	
	7A	1	**286-0015**	1	STEM	
	8	1	**428-7042**	1	BRACKET	
	9	1	**430-6686**	1	BRACKET-FILTER	
	10	1	**433-2039**	1	HOSE	
M	11	1	**195-2186**	3	BOLT-SOCKET HEAD	
M	12	1	**6I-0260**	2	BOLT (M8X1.25X25-MM)	

M - METRIC PART

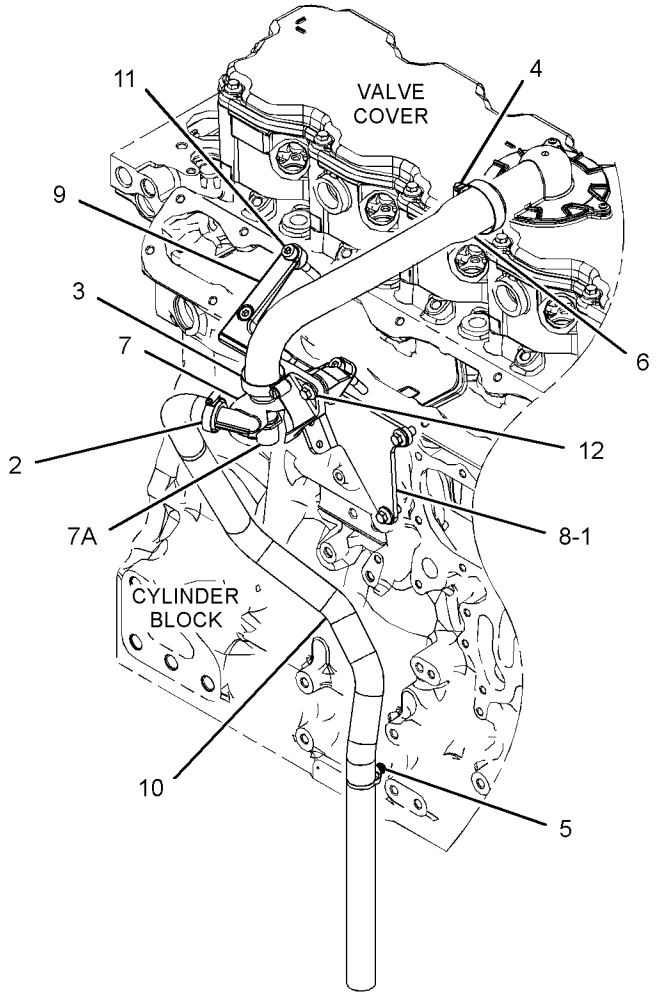

GRAPHIC #1 <END> g03653579

322-0099 CONTROL GP-BRAKE

S/N: CH91-UP
PART OF 396-6835 OPERATOR AR
ALSO AN ATTACHMENT

SMCS-4269, 4296 **i05496639**

NOTE	REF NO	GRAPHIC REF	PART NUMBER	QTY	PART NAME 1 2 3 4 5 6 (PRODUCT LEVEL)	SEE PAGE
	1	1	**5W-1696**	1	WASHER-SEALING (12.2X15.4X1.5-MM)	
	2	1	**8T-5063**	1	ROD END	
	3	1	**8T-5381**	1	PIN AS-SPRING	
	4	1	**121-5977**	1	PLATE	
Y	5	1	**160-1501**	1	PEDAL GP-BRAKE	871
	6	1	**322-0100**	1	VALVE GP-BRAKE CONTROL	
		1	**8U-5801**	1	BOOT	
		1	**117-0345**	1	LEVER	
	7	1	**337-5776**	1	SWITCH AS-PRESSURE (BRAKE OIL)	
		1	**9X-3401**	3	PIN-CONNECTOR (16-GA TO 18-GA)	
		1	**102-8803**	1	KIT-RECEPTACLE (3-PIN)	
					(INCLUDES RECEPTACLE AS & WEDGE)	
	8	1	**344-7390**	1	SENSOR GP-PRESSURE (BRAKE CONTROL) (BRAKE OIL)	
M	9	1	**6V-5196**	3	BOLT-SOCKET HEAD (M8X1.25X80-MM)	
	10	1	**3J-1907**	1	SEAL-O-RING	
	11	1	**3S-2093**	1	STRAP-CABLE	
	12	1	**4J-5309**	3	SEAL-O-RING	
M	13	1	**5C-7261**	3	NUT (M8X1.25-THD)	
M	14	1	**8T-4133**	1	NUT (M10X1.5-THD)	
	15	1	**8T-4224**	4	WASHER-HARD (8.8X16X2-MM THK)	
M	16	1	**8T-7547**	4	BOLT (M8X1.25X30-MM)	

M - METRIC PART
Y - SEPARATE ILLUSTRATION

322-0099 **CONTROL GP-BRAKE (**contd.**)** **i05496639**

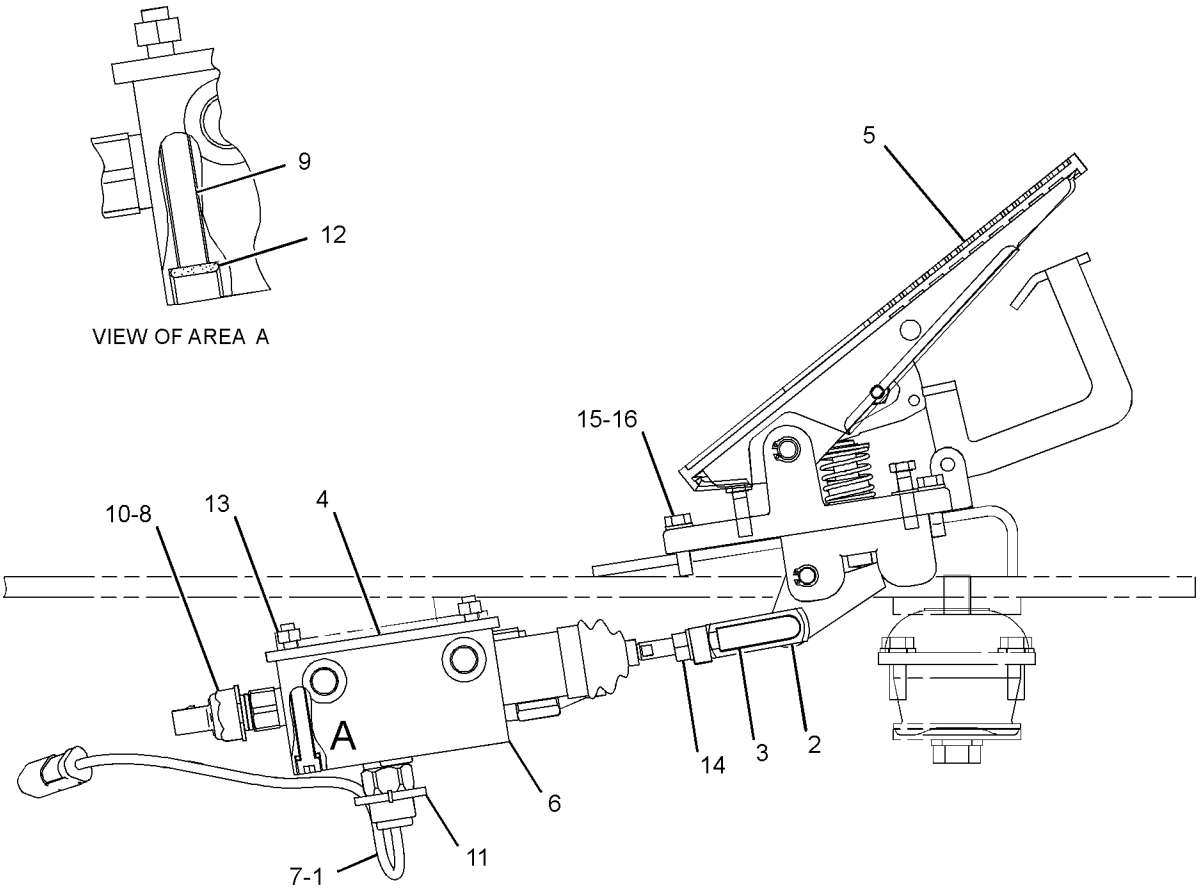

RIGHT SIDE VIEW

GRAPHIC #1 <END> g02424385

134-9680 COUPLING GP-PUMP

S/N: CH91-UP
PART OF 275-4912 COUPLING GP-FLEXIBLE
ALSO AN ATTACHMENT

SMCS-5062 **i05970848**

NOTE	REF NO	GRAPHIC REF	PART NUMBER	QTY	PART NAME 1 2 3 4 5 6 (PRODUCT LEVEL)	SEE PAGE
M	1	1	**6V-4429**	1	BOLT (M16X2X40-MM)	
	2	1	**134-9682**	1	HUB	
	3	1	**170-1350**	1	WASHER (16.5X55X12-MM THK)	

M - METRIC PART

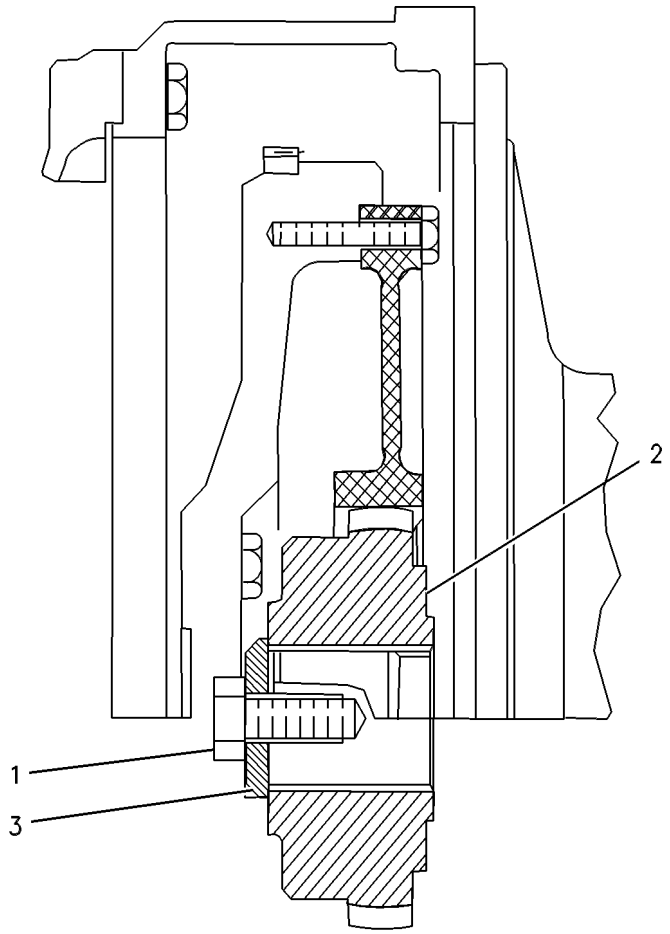

GRAPHIC #1 <END> g00277311

391-2634 COVER GP-LINES

S/N: CH91-UP

PART OF 453-8185, 473-2841, 517-3262 DISTRIBUTION AR

AN ATTACHMENT

SMCS-5057 **i05525239**

NOTE	REF NO	GRAPHIC REF	PART NUMBER	QTY	PART NAME 1 2 3 4 5 6 (PRODUCT LEVEL)	SEE PAGE
	1	1	**127-4613**	2	COVER-FLANGE	
M	2	1	**101-7404**	8	BOLT-SOCKET HEAD (M10X1.5X30-MM)	
	3	1	**4J-0520**	2	SEAL-O-RING	

M - METRIC PART

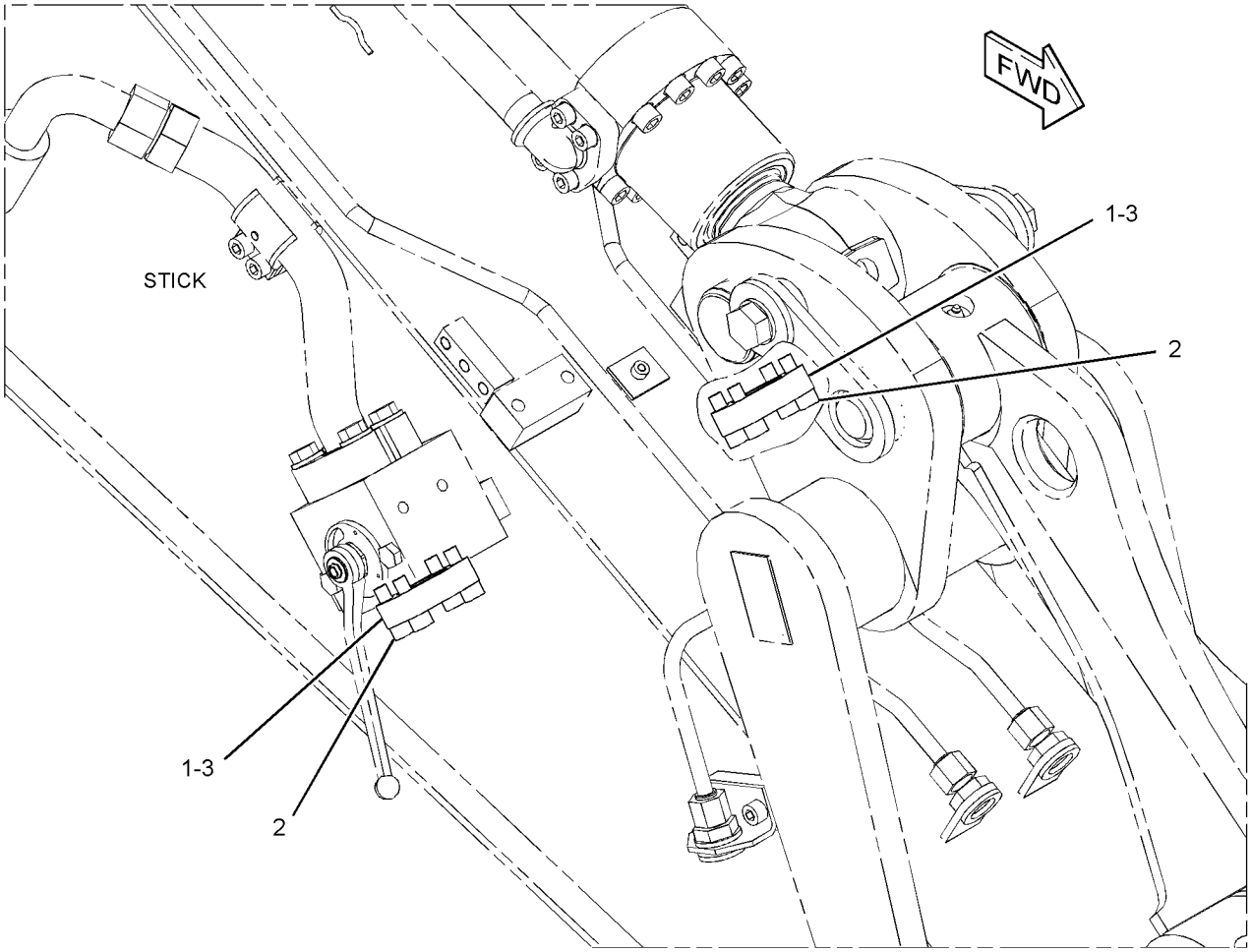

GRAPHIC #1 <END> g03335950

111-1897 CYLINDER & MTG GP-AXLE LOCK

S/N: CH91-UP
PART OF 354-7286 HYDRAULIC AR-LOWER
ALSO AN ATTACHMENT

SMCS-7201 **i05934387**

NOTE	REF NO	GRAPHIC REF	PART NUMBER	QTY	PART NAME 1 2 3 4 5 6 (PRODUCT LEVEL)	SEE PAGE
Y	1	1	**318-4545**	2	CYLINDER GP-AXLE OSC LOCK	354
M	2	1	**304-9129**	8	BOLT (M20X2.5X55-MM)	
	3	1	**8T-4123**	8	WASHER (22X35X3.5-MM THK)	

M - METRIC PART
Y - SEPARATE ILLUSTRATION

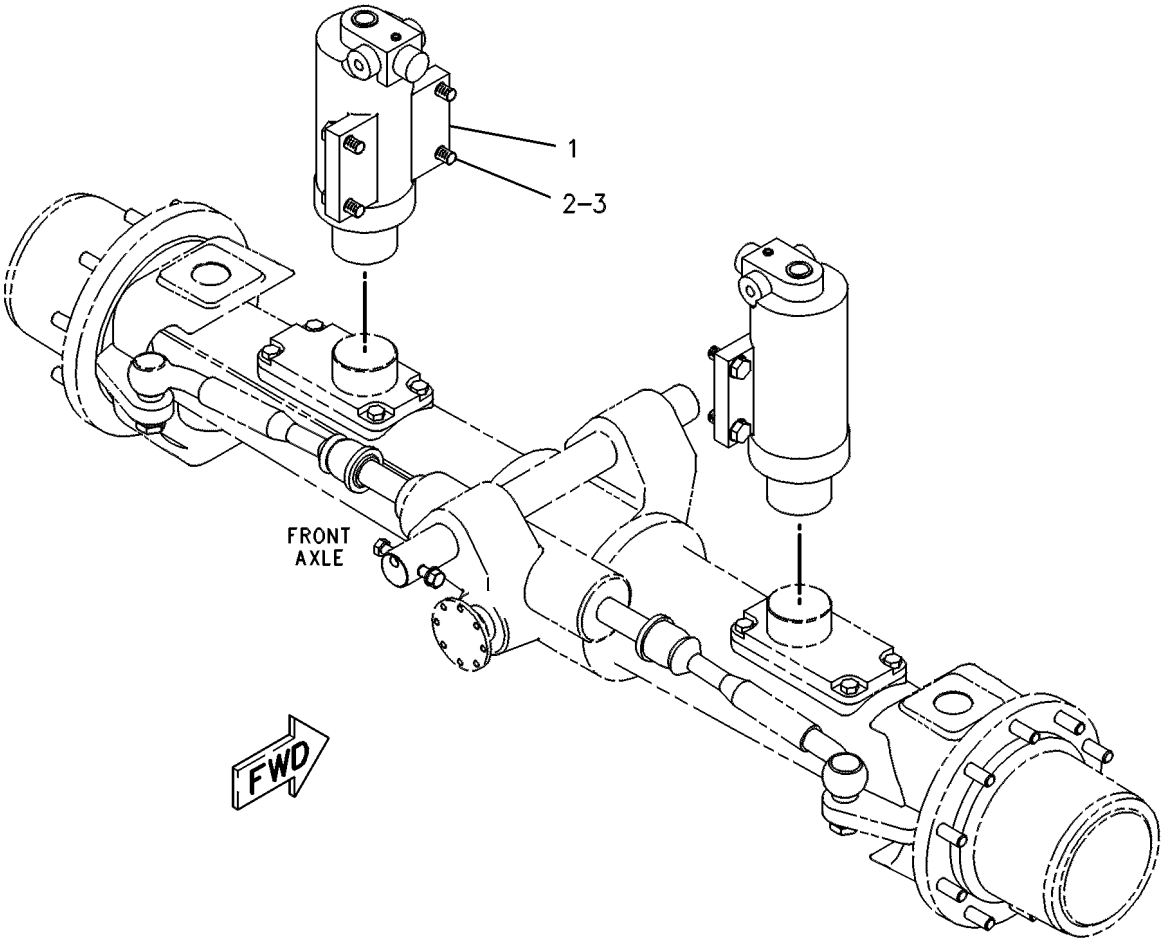

GRAPHIC #1 <END> g00244555

368-3219 CYLINDER & SEAL GP-BOOM

S/N: CH91-UP
PART OF 446-2727 BOOM AR
AN ATTACHMENT

SMCS-5456 **i05927202**

NOTE	REF NO	GRAPHIC REF	PART NUMBER	QTY	PART NAME 1 2 3 4 5 6 (PRODUCT LEVEL)	SEE PAGE
	1	1	**9X-4597**	2	SEAL-LIP TYPE	
	2	1	**096-0854**	2	SEAL-LIP TYPE	
Y	3	1	**368-3243**	1	CYLINDER GP-HYDRAULIC	366

Y - SEPARATE ILLUSTRATION

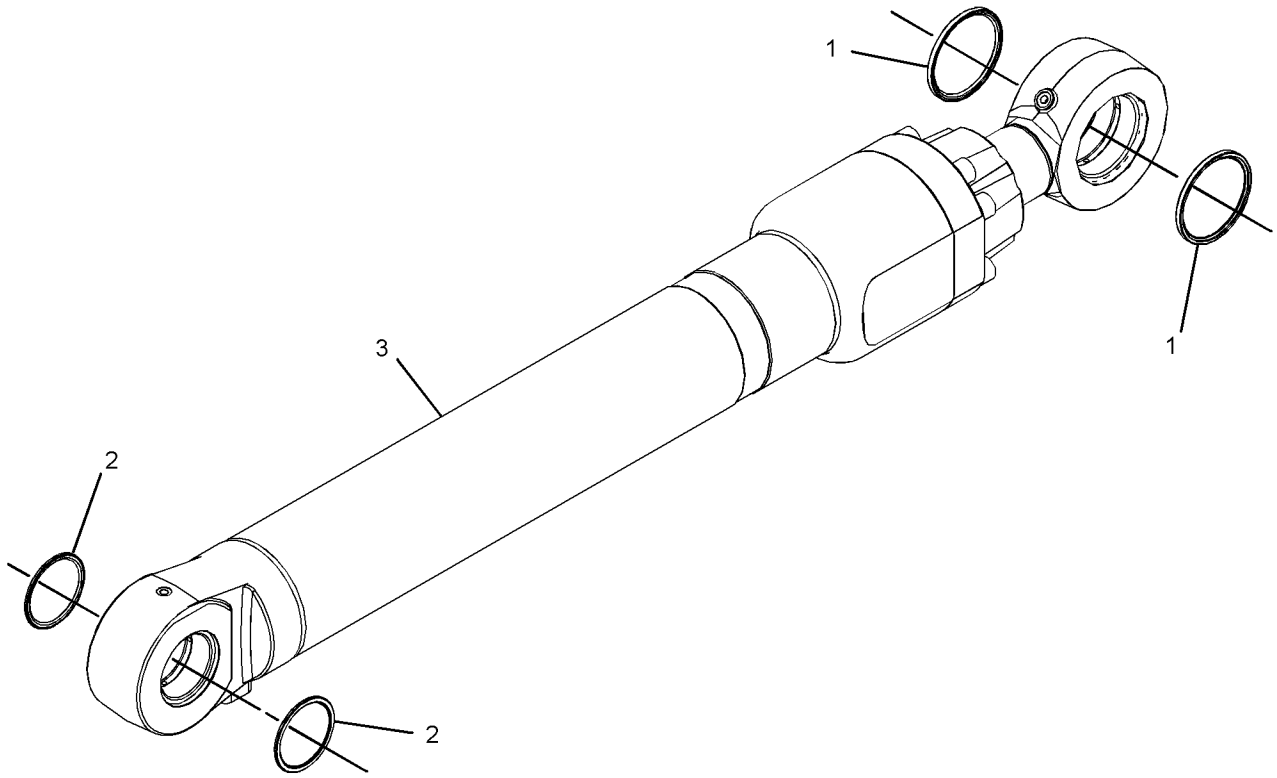

GRAPHIC #1 <END> g03063238

368-3220 CYLINDER & SEAL GP-BOOM

S/N: CH91-UP
PART OF 425-9130 BOOM AR
AN ATTACHMENT

SMCS-5456 **i05922249**

NOTE	REF NO	GRAPHIC REF	PART NUMBER	QTY	PART NAME 1 2 3 4 5 6 (PRODUCT LEVEL)	SEE PAGE
	1	1	**9X-4597**	2	SEAL-LIP TYPE	
	2	1	**096-0854**	2	SEAL-LIP TYPE	
Y	3	1	**368-3244**	1	CYLINDER GP-HYDRAULIC	368

Y - SEPARATE ILLUSTRATION

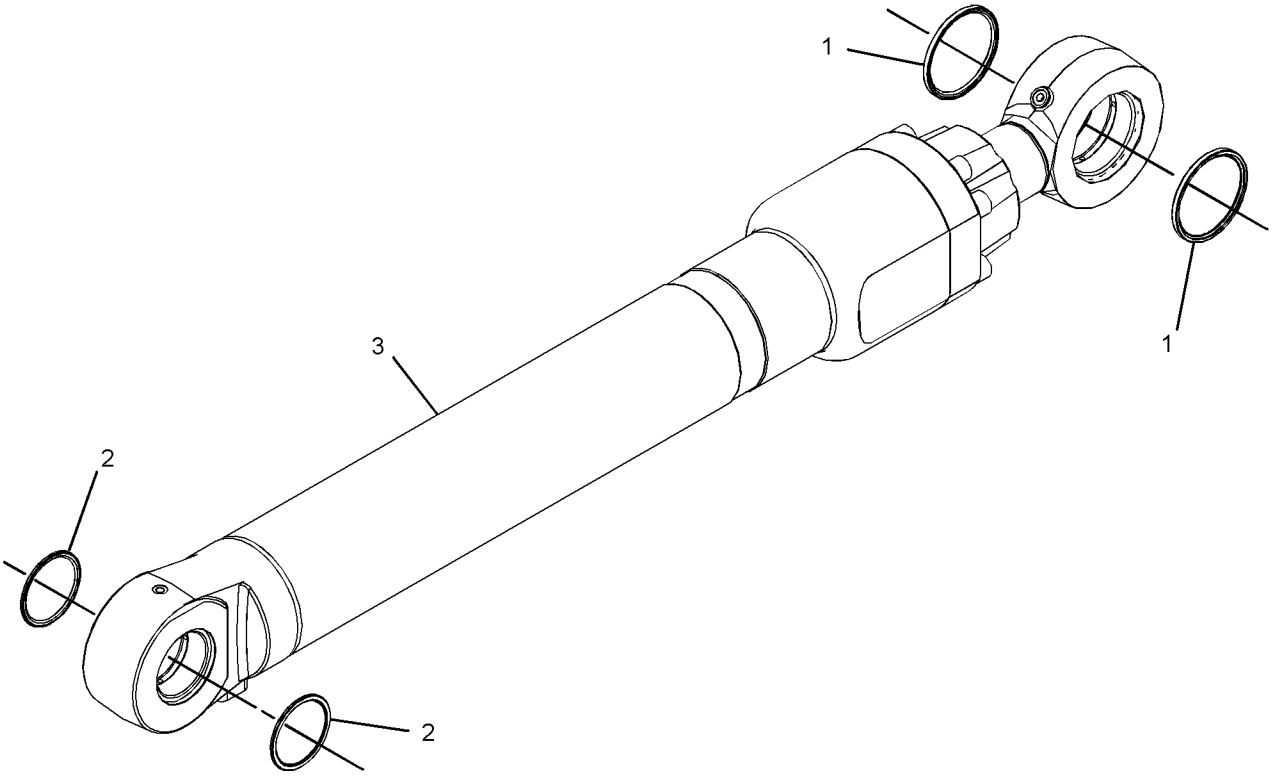

GRAPHIC #1 <END> g03063238

368-3221 CYLINDER & SEAL GP-BOOM

S/N: CH91-UP
PART OF 446-2727 BOOM AR
AN ATTACHMENT

SMCS-5456 **i05927207**

NOTE	REF NO	GRAPHIC REF	PART NUMBER	QTY	PART NAME 1 2 3 4 5 6 (PRODUCT LEVEL)	SEE PAGE
	1	1	**9X-4597**	2	SEAL-LIP TYPE	
	2	1	**9X-4598**	2	SEAL-LIP TYPE	
Y	3	1	**368-3245**	1	CYLINDER GP-BOOM	356

Y - SEPARATE ILLUSTRATION

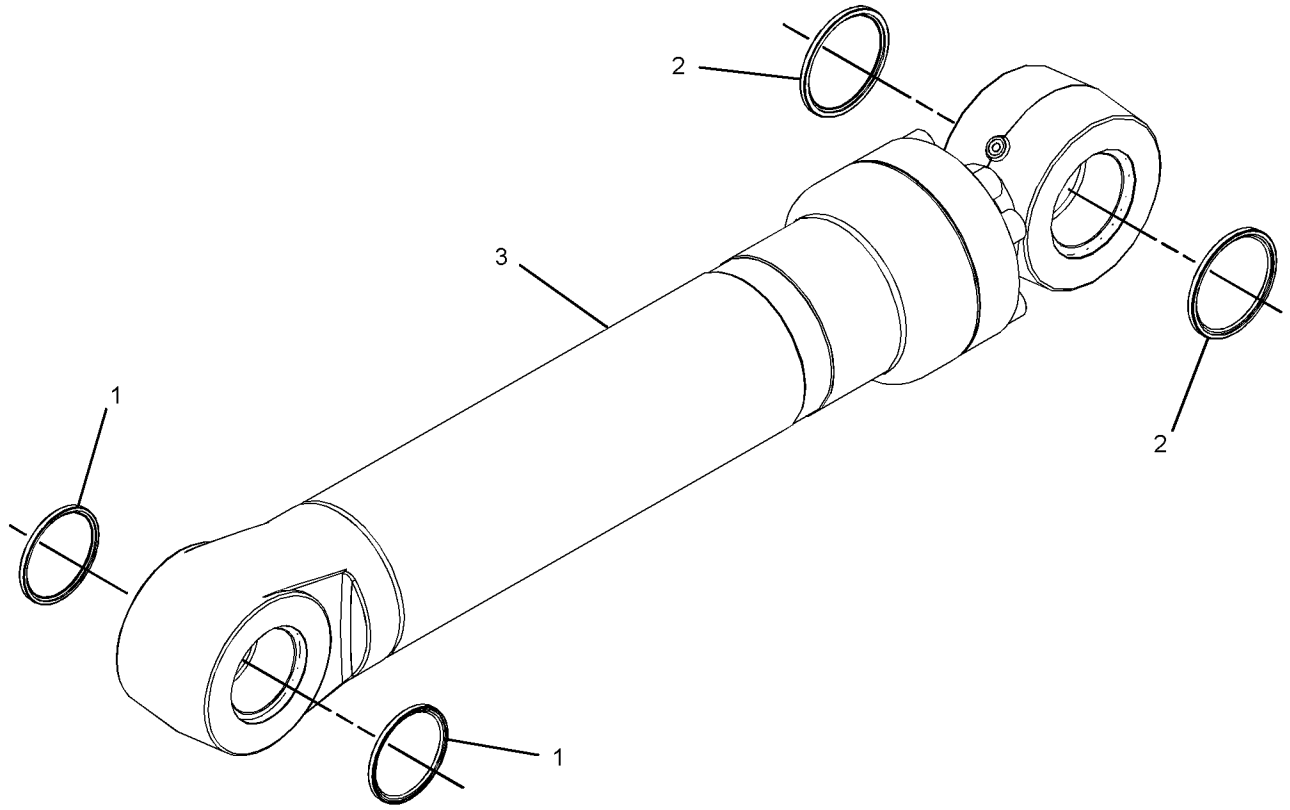

GRAPHIC #1 <END> g03063306

533-9612 CYLINDER & SEAL GP-BOOM

S/N: CH91-UP
130-MM (5.2-IN) BORE X 906-MM (35.7-IN) STROKE
PART OF 425-9130 BOOM AR
AN ATTACHMENT

SMCS-5456 **i07423799**

NOTE	REF NO	GRAPHIC REF	PART NUMBER	QTY	PART NAME 1 2 3 4 5 6 (PRODUCT LEVEL)	SEE PAGE
	1	1	**166-1496**	2	SEAL-LIP TYPE	
M	2	1	**096-0007**	12	BOLT-SOCKET HEAD (M16X2X85-MM)	
	3	1	**096-0854**	2	SEAL-LIP TYPE	
M	4	1	**385-2891**	1	SETSCREW-SOCKET (M12X1.75X12-MM)	
	5	1	**385-2922**	1	BALL	
J	6	1	**416-1321**	1	SEAL-O-RING	
J	7	1	**416-1322**	1	RING-BACKUP	
J	8	1	**416-1323**	2	RING-WEAR	
J	9	1	**416-1324**	1	SEAL AS	
J	10	1	**416-1325**	1	RING-WEAR	
	11	1	**484-2773**	1	BEARING-SLEEVE	
	12	1	**484-2774**	1	RING-RETAINING	
J	13	1	**484-2777**	1	SEAL-WIPER	
J	14	1	**484-2779**	1	SEAL-U-CUP	
J	15	1	**484-2780**	1	SEAL-BUFFER	
	16	1	**539-1698**	1	CYLINDER AS (HYDRAULIC)	
	16A	1	**258-8506**	1	BUSHING	
	17	1	**539-1699**	1	ROD AS (CYLINDER)	
	17A	1	**258-8507**	1	BUSHING	
	18	1	**539-1700**	1	PISTON	
	19	1	**539-1701**	1	STOP	
	20	1	**539-1702**	1	LOCKNUT-SPECIAL	
	21	1	**539-1703**	1	HEAD	
J	22	1	**539-1740**	1	RING-BACKUP	
J	23	1	**539-1755**	1	RING-SEAL	
					AVAILABLE REPAIR KIT(S):	
J			**541-1521**	1	KIT-SEAL (HYDRAULIC CYLINDER)	

J - KIT MARKED J SERVICES PART(S) MARKED J
M - METRIC PART

533-9612 **CYLINDER & SEAL GP-BOOM** (contd.) **i07423799**

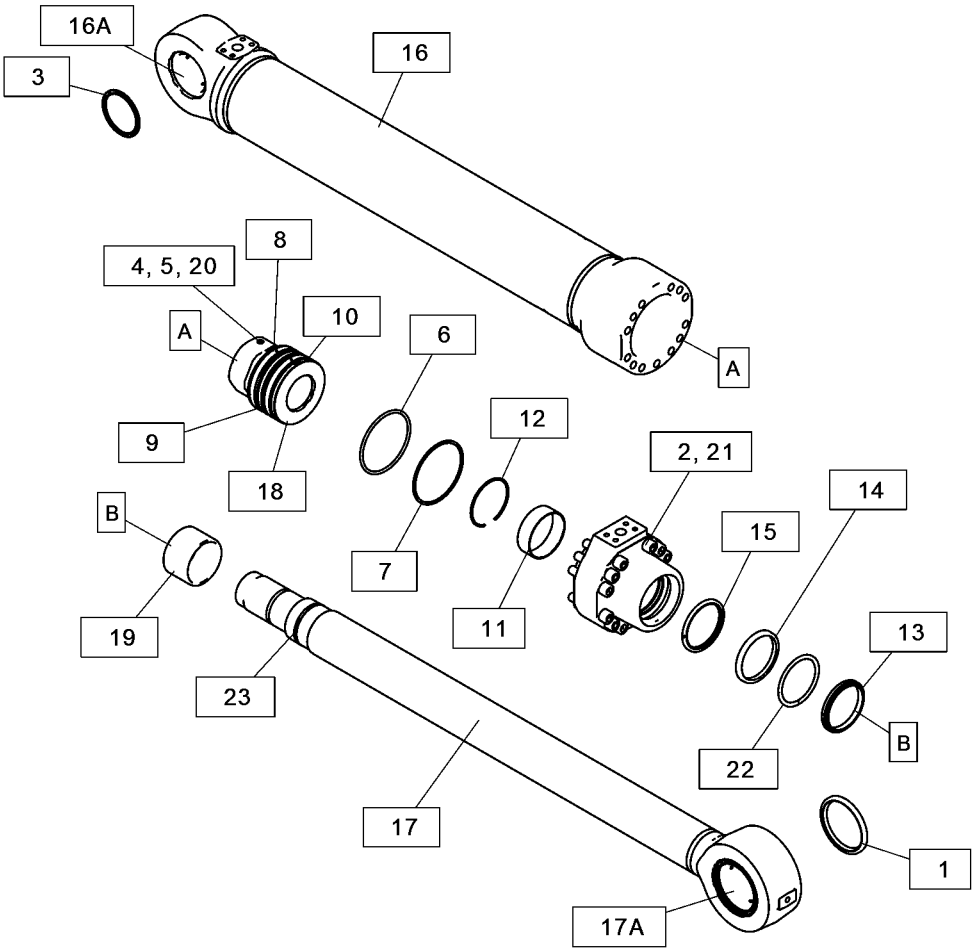

GRAPHIC #1 <END> g06282719

368-3224 CYLINDER & SEAL GP-BUCKET

S/N: CH91-UP

PART OF 426-0345, 426-2549, 427-9783, 454-8156 STICK AR AN ATTACHMENT

SMCS-5457 **i05922327**

NOTE	REF NO	GRAPHIC REF	PART NUMBER	QTY	PART NAME 1 2 3 4 5 6 (PRODUCT LEVEL)	SEE PAGE
	1	1	**5W-2817**	2	FITTING-GREASE	
	2	1	**093-1434**	4	SEAL-LIP TYPE	
Y	3	1	**368-3248**	1	CYLINDER GP-BUCKET	358

Y - SEPARATE ILLUSTRATION

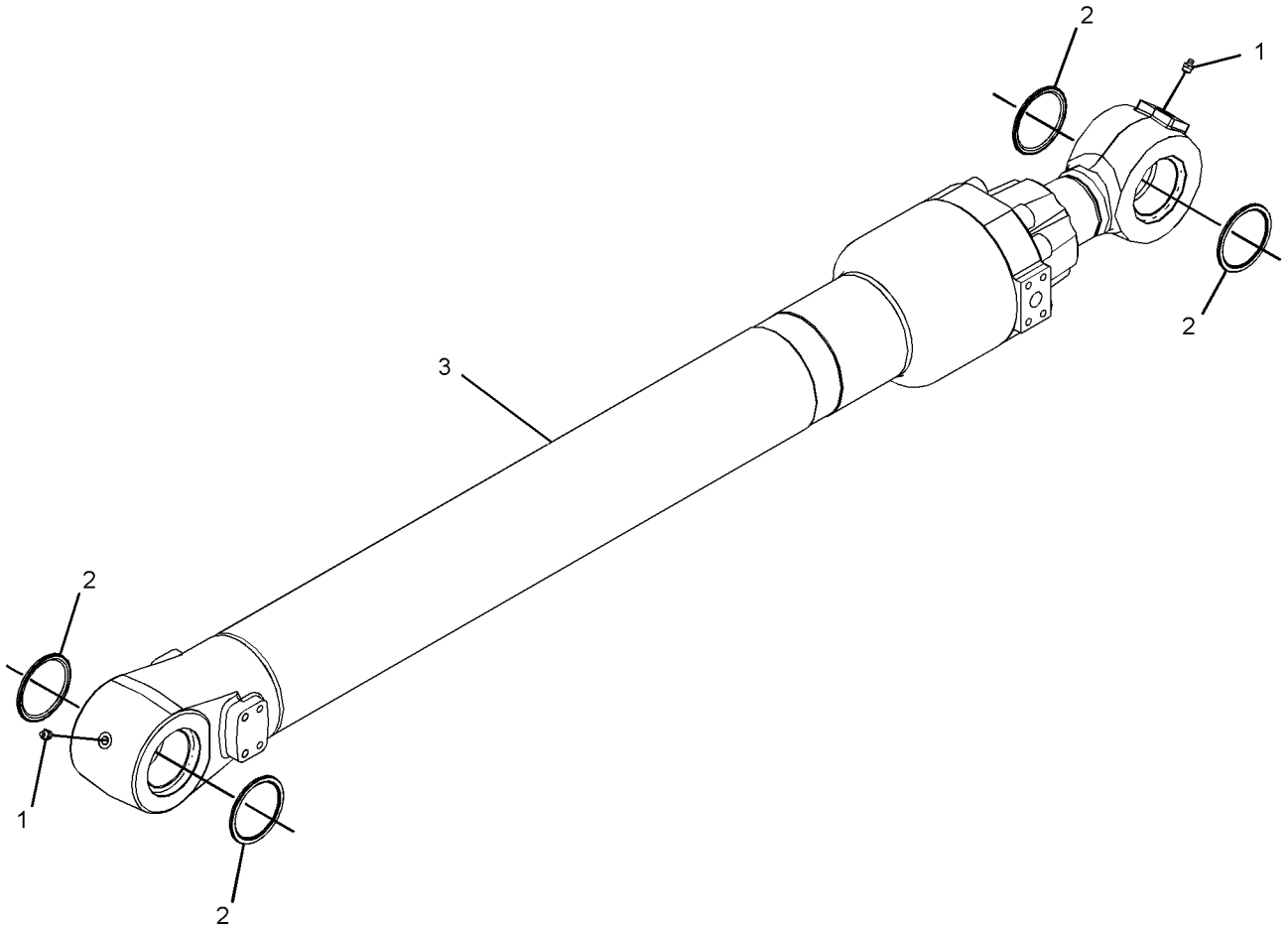

GRAPHIC #1 <END> g03064813

533-9620 CYLINDER & SEAL GP-BUCKET—BUCKET

S/N: CH91-UP
110-MM (4.3-IN) BORE X 1055-MM (41.5-IN) STROKE
PART OF 426-0345, 426-2549, 427-9783, 454-8156 STICK AR
AN ATTACHMENT

SMCS-5457 **i07307864**

NOTE	REF NO	GRAPHIC REF	PART NUMBER	QTY	PART NAME 1 2 3 4 5 6 (PRODUCT LEVEL)	SEE PAGE
	1	1	**5W-2817**	2	FITTING-GREASE	
	2	1	**093-1434**	4	SEAL-LIP TYPE	
M	3	1	**095-0703**	12	BOLT-SOCKET HEAD (M16X2X75-MM)	
	4	1	**385-2899**	1	RING-RETAINING	
	5	1	**385-2900**	1	BUSHING	
	6	1	**385-2905**	1	RING-SNAP	
J	7	1	**416-1277**	1	SEAL-O-RING	
J	8	1	**416-1278**	1	RING-BACKUP	
J	9	1	**416-1279**	2	RING-WEAR	
J	10	1	**416-1280**	1	SEAL AS	
J	11	1	**416-1282**	1	RING-WEAR	
J	12	1	**416-1284**	1	SEAL-WIPER	
J	13	1	**416-1285**	1	SEAL-U-CUP	
	14	1	**416-1287**	1	SEAL-BUFFER	
	15	1	**422-9120**	1	SETSCREW-HEX SOCKET	
	16	1	**422-9122**	1	BALL	
J	17	1	**510-3506**	1	RING-BACKUP	
	18	1	**539-1715**	1	CYLINDER AS-STICK	
	18A	1	**105-7366**	1	BUSHING	
	19	1	**539-1716**	1	ROD AS	
	19A	1	**190-5335**	1	BUSHING	
	20	1	**539-1717**	1	PISTON	
	21	1	**539-1718**	1	LOCKNUT-SPECIAL	
	22	1	**539-1719**	1	HEAD	
					AVAILABLE REPAIR KIT(S):	
J			**541-1524**	1	KIT-SEAL	

J - KIT MARKED J SERVICES PART(S) MARKED J
M - METRIC PART

533-9620 **CYLINDER & SEAL GP-BUCKET (**contd.**)** **i07307864**

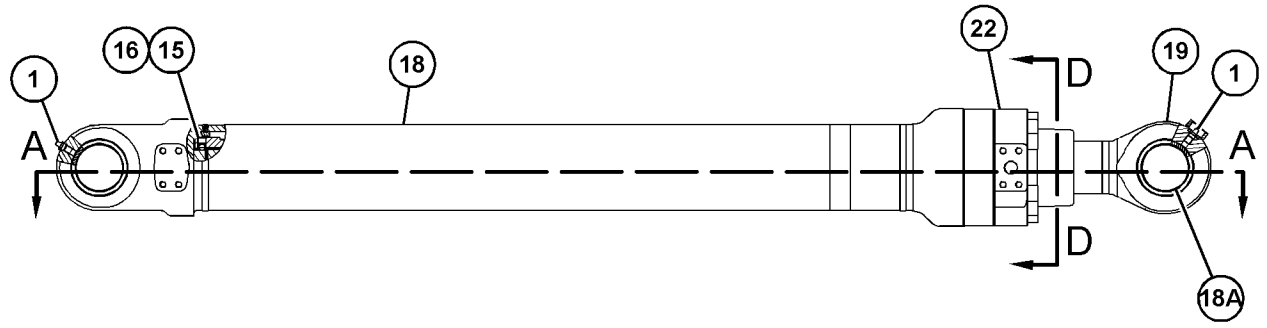

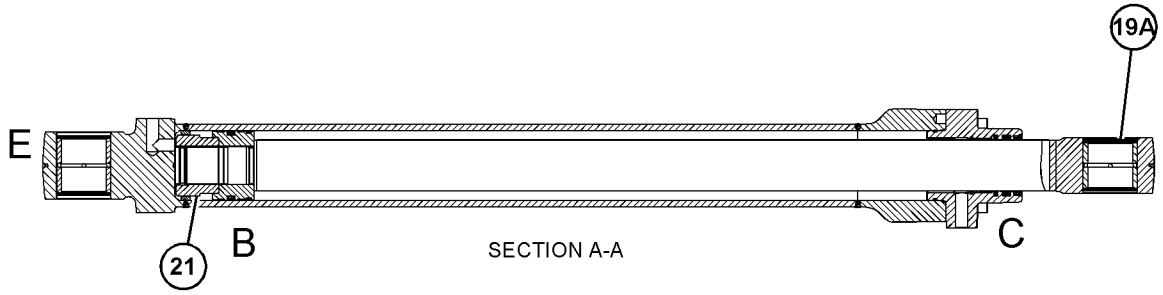

SECTION A-A

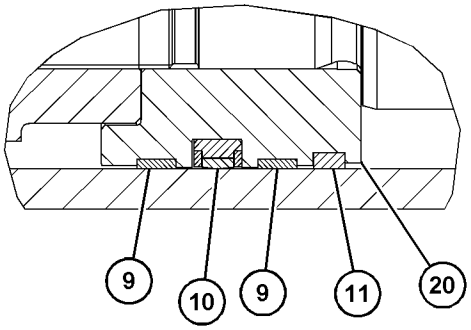

VIEW OF AREA B

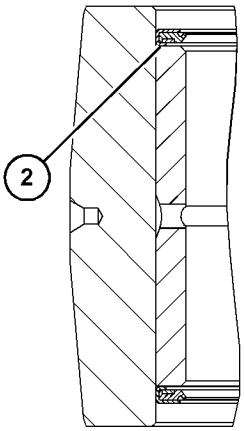

VIEW OF AREA E

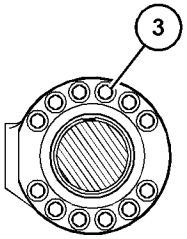

SECTION D-D

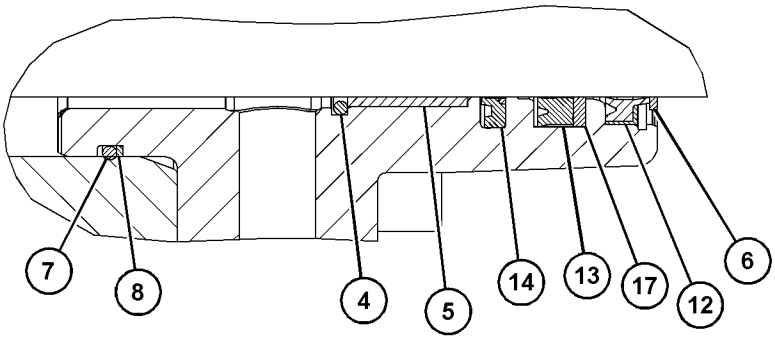

VIEW OF AREA C

GRAPHIC #1 <END> g06237397

368-3222 CYLINDER & SEAL GP-STICK

S/N: CH91-UP
PART OF 425-9130, 446-2727 BOOM AR
AN ATTACHMENT

SMCS-5458 **i05922277**

NOTE	REF NO	GRAPHIC REF	PART NUMBER	QTY	PART NAME 1 2 3 4 5 6 (PRODUCT LEVEL)	SEE PAGE
	1	1	**5W-2817**	1	FITTING-GREASE	
	2	1	**096-0854**	4	SEAL-LIP TYPE	
Y	3	1	**368-3246**	1	CYLINDER GP-STICK	373

Y - SEPARATE ILLUSTRATION

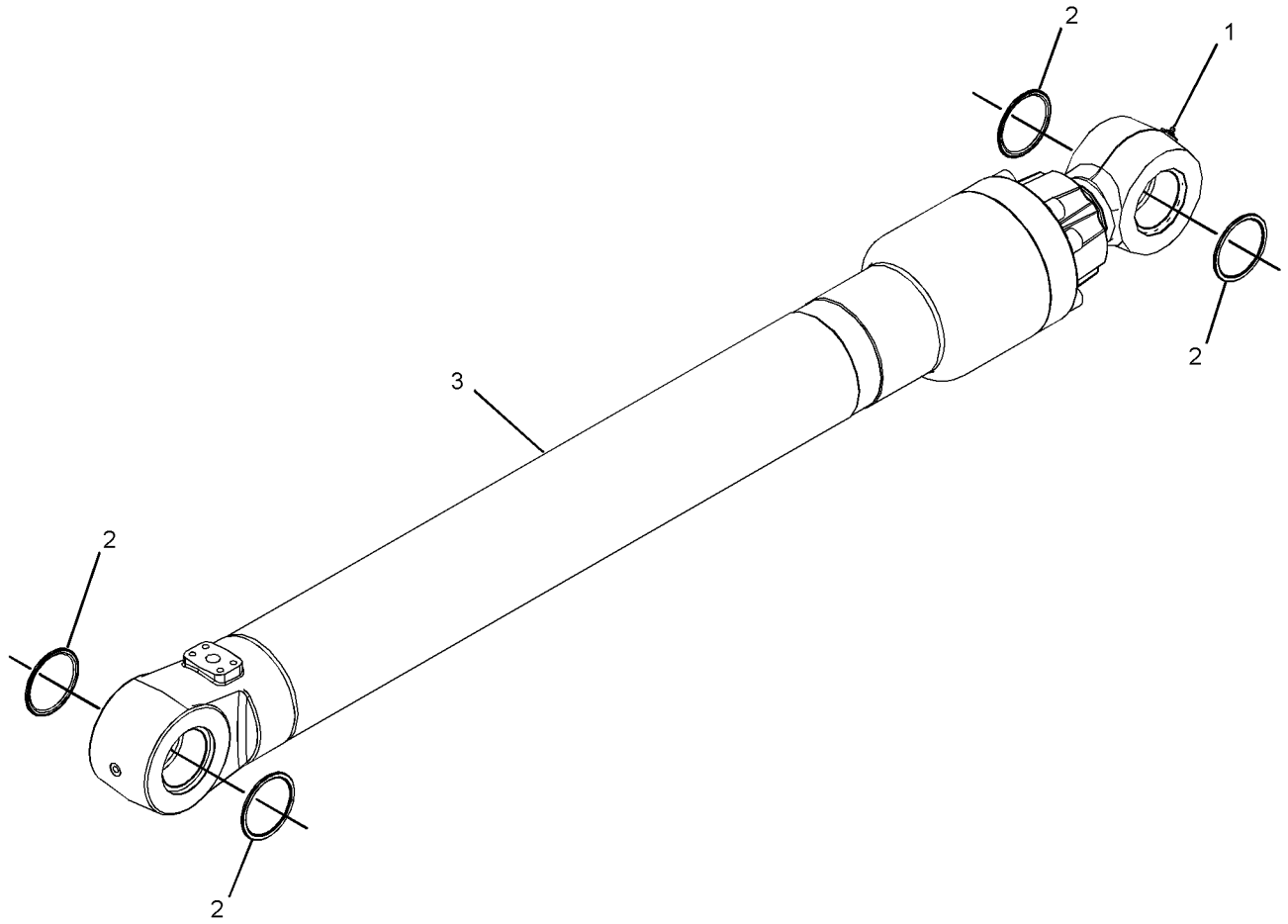

GRAPHIC #1 <END> g03064796

533-9617 CYLINDER & SEAL GP-STICK

S/N: CH91-UP
130-MM (5.2-IN) BORE X 1205-MM (47.5-IN) STROKE
PART OF 425-9130 BOOM AR
AN ATTACHMENT

SMCS-5458 **i07836319**

NOTE	REF NO	GRAPHIC REF	PART NUMBER	QTY	PART NAME 1 2 3 4 5 6 (PRODUCT LEVEL)	SEE PAGE
	1	1	**4J-5267**	1	SEAL-O-RING	
	2	1	**5K-9090**	1	SEAL-O-RING	
	3	1	**5W-2817**	1	FITTING-GREASE	
M	4	1	**096-0007**	12	BOLT-SOCKET HEAD (M16X2X85-MM)	
	5	1	**096-0854**	4	SEAL-LIP TYPE	
	6	1	**151-8865**	1	ELBOW	
	7	1	**385-2920**	1	RING-RETAINING	
	8	1	**385-2922**	1	BALL	
J	9	1	**416-1321**	1	SEAL-O-RING	
J	10	1	**416-1322**	1	RING-BACKUP	
J	11	1	**416-1325**	1	RING-WEAR	
	12	1	**484-2773**	1	BEARING-SLEEVE	
	13	1	**484-2774**	1	RING-RETAINING	
J	14	1	**484-2777**	1	SEAL-WIPER	
J	15	1	**484-2779**	1	SEAL-U-CUP	
J	16	1	**484-2780**	1	SEAL-BUFFER	
J	17	1	**510-3511**	1	SEAL AS-PISTON	
	18	1	**539-1700**	1	PISTON	
	19	1	**539-1702**	1	LOCKNUT-SPECIAL	
	20	1	**539-1710**	1	CYLINDER AS-BOOM	
	20A	1	**128-3031**	1	BUSHING	
	21	1	**539-1711**	1	ROD AS	
	21A	1	**128-3031**	1	BUSHING	
	22	1	**539-1712**	1	STOP	
	23	1	**539-1713**	1	STOP	
	24	1	**539-1714**	1	HEAD	
J	25	1	**539-1740**	1	RING-BACKUP	
	26	1	**539-1748**	1	RING-RETAINING	
J	27	1	**539-1755**	1	RING-SEAL	
J	28	1	**545-5867**	1	RING-SEAL	
M	29	1	**101-7398**	4	BOLT-SOCKET HEAD (M10X1.5X40-MM)	
M	30	1	**556-3006**	1	SETSCREW-SOCKET (M12X1.75X12-MM)	
J	31	1	**558-1612**	2	RING-WEAR	
					AVAILABLE REPAIR KIT(S):	
J			**541-1523**	1	KIT-SEAL (CYLINDER)	

J - KIT MARKED J SERVICES PART(S) MARKED J
M - METRIC PART

533-9617 **CYLINDER & SEAL GP-STICK** (contd.) **i07836319**

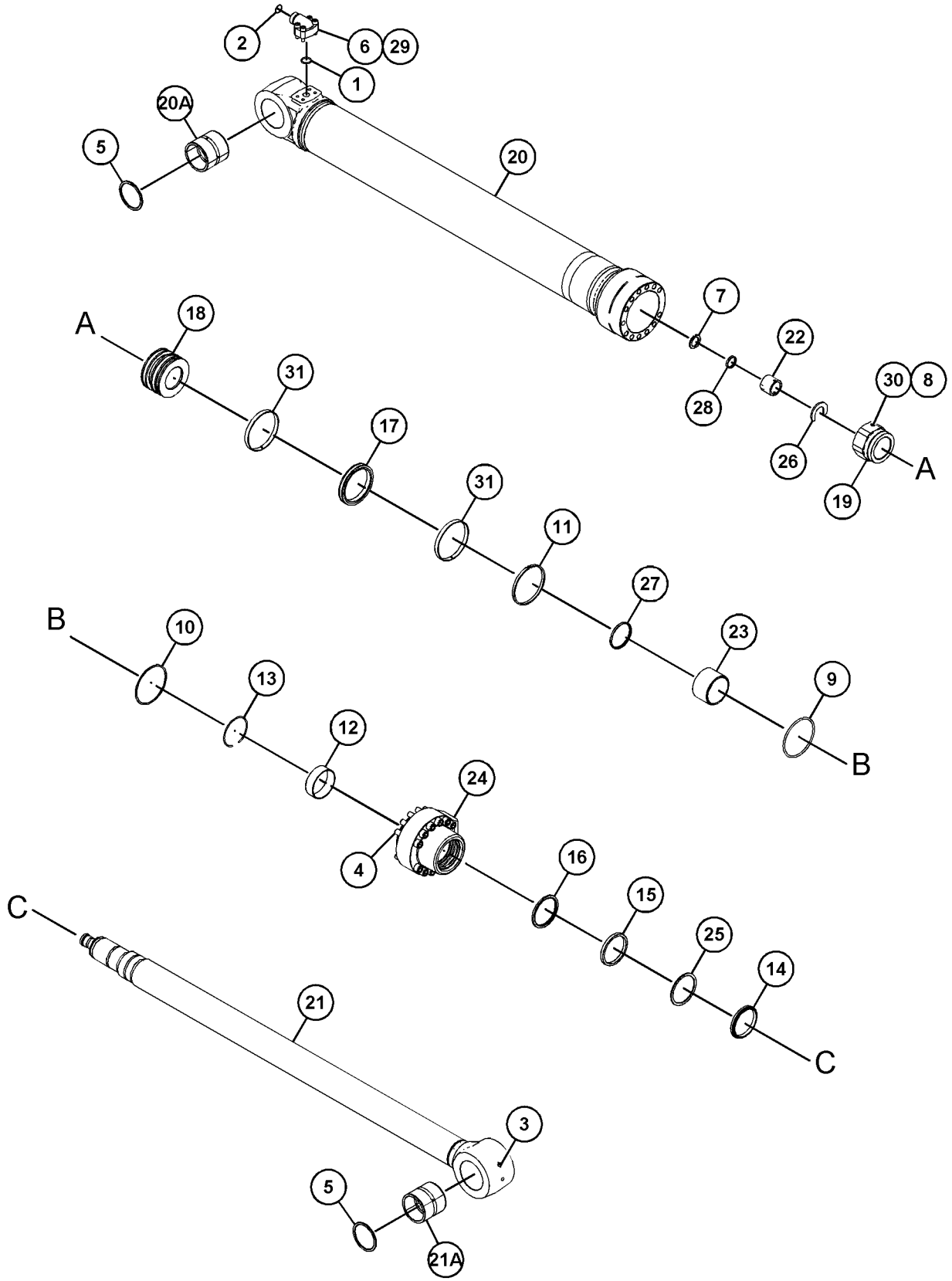

GRAPHIC #1 <END> g06446254

318-4545 CYLINDER GP-AXLE OSC LOCK

S/N: CH91-UP
100-MM (3.9-IN) BORE X 160-MM (6.3-IN) STROKE
PART OF 111-1897 CYLINDER & MTG GP-AXLE LOCK
ALSO AN ATTACHMENT

SMCS-5468 **i05934389**

NOTE	REF NO	GRAPHIC REF	PART NUMBER	QTY	PART NAME 1 2 3 4 5 6 (PRODUCT LEVEL)	SEE PAGE
	1	1	**234-3242**	1	CYLINDER	
	2	1	**8U-1967**	1	PISTON	
	3	1	**234-3243**	1	VALVE GP-CHECK (AXLE OSC LOCK CYLINDER)	
	3A	1	**4J-5351**	1	SEAL-O-RING	
	3B	1	**6V-3922**	1	SEAL-O-RING	
	3C	1	**123-2342**	1	SEAL-O-RING	
	3D	1	**221-3541**	1	RING-BACKUP	
	4	1	**320-4718**	1	SPOOL-CONTROL	
	5	1	**320-4719**	1	COVER	
	6	1	**320-4720**	1	COLLAR-CHECK VALVE	
	7	1	**320-4721**	1	SPRING	
J	8	1	**234-4855**	1	SEAL	
J	9	1	**8U-6849**	1	RING	
J	10	1	**096-6100**	1	SEAL-O-RING	
M	11	1	**136-4192**	5	BOLT (M6X1X35-MM)	
	12	1	**9S-9334**	1	PLUG (1-5/16-12-THD)	
	13	1	**9S-8002**	1	PLUG (7/16-20-THD)	
	14	1	**9S-8005**	1	PLUG (3/4-16-THD)	
J	15	1	**7M-8485**	1	SEAL-O-RING	
J	16	1	**3K-0360**	1	SEAL-O-RING	
J	17	1	**3J-7354**	1	SEAL-O-RING	
					AVAILABLE REPAIR KIT(S):	
J			**320-4723**	1	KIT-SEAL (AXLE OSC LOCK CYLINDER)	
					(ALSO INCLUDES O-RING SEALS & BACKUP RING)	

J - KIT MARKED J SERVICES PART(S) MARKED J
M - METRIC PART

318-4545 **CYLINDER GP-AXLE OSC LOCK (**contd.**)** **i05934389**

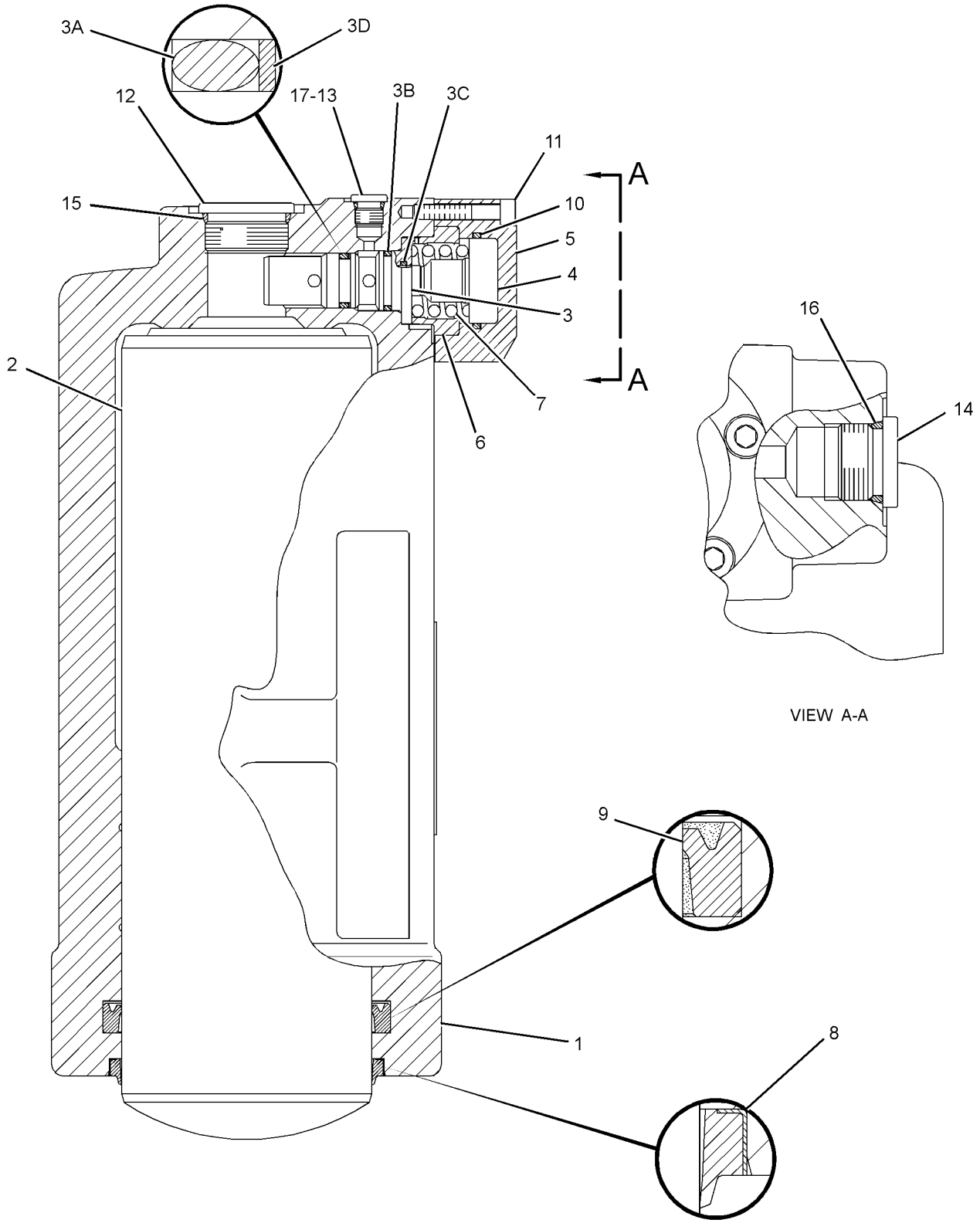

GRAPHIC #1 <END> g01624702

368-3245 CYLINDER GP-BOOM

S/N: CH91-UP
160-MM (6.3-IN) BORE X 731-MM (28.8-IN) STROKE
PART OF 368-3221 CYLINDER & SEAL GP-BOOM
AN ATTACHMENT

SMCS-5456 **i05927213**

NOTE	REF NO	GRAPHIC REF	PART NUMBER	QTY	PART NAME 1 2 3 4 5 6 (PRODUCT LEVEL)	SEE PAGE
J	1	1	**165-9286**	1	SEAL-LIP TYPE	
	2	1	**368-3269**	1	CYLINDER AS-BOOM	
	2A	1	**087-5548**	1	BUSHING	
	3	1	**368-6818**	1	ROD & BEARING AS-CYLINDER	
	3A	1	**7Y-3591**	1	BUSHING	
	4	1	**374-5165**	1	HEAD	
	5	1	**374-5170**	1	PISTON	
J	6	1	**170-9844**	1	SEAL-BUFFER	
J	7	1	**087-5550**	1	RING-BACKUP	
M	8	1	**095-1267**	1	SETSCREW-SOCKET (M10X1.5-THD)	
J	9	1	**095-1635**	1	SEAL-O-RING	
J	10	1	**112-6921**	1	SEAL-O-RING	
	11	1	**114-0756**	1	BUSHING	
J	12	1	**170-9860**	1	SEAL-U-CUP	
J	13	1	**185-0230**	2	RING	
J	14	1	**185-0231**	1	RING	
J	15	1	**7Y-5116**	1	RING	
	16	1	**7Y-5119**	1	RING-RETAINING	
M	17	1	**7Y-5239**	8	BOLT-SOCKET HEAD (M24X3X100-MM)	
J	18	1	**9X-3604**	1	SEAL AS	
					AVAILABLE REPAIR KIT(S):	
J			**258-0504**	1	KIT-SEAL (BOOM CYLINDER)	

J - KIT MARKED J SERVICES PART(S) MARKED J
M - METRIC PART

368-3245 **CYLINDER GP-BOOM (**contd.**)** **i05927213**

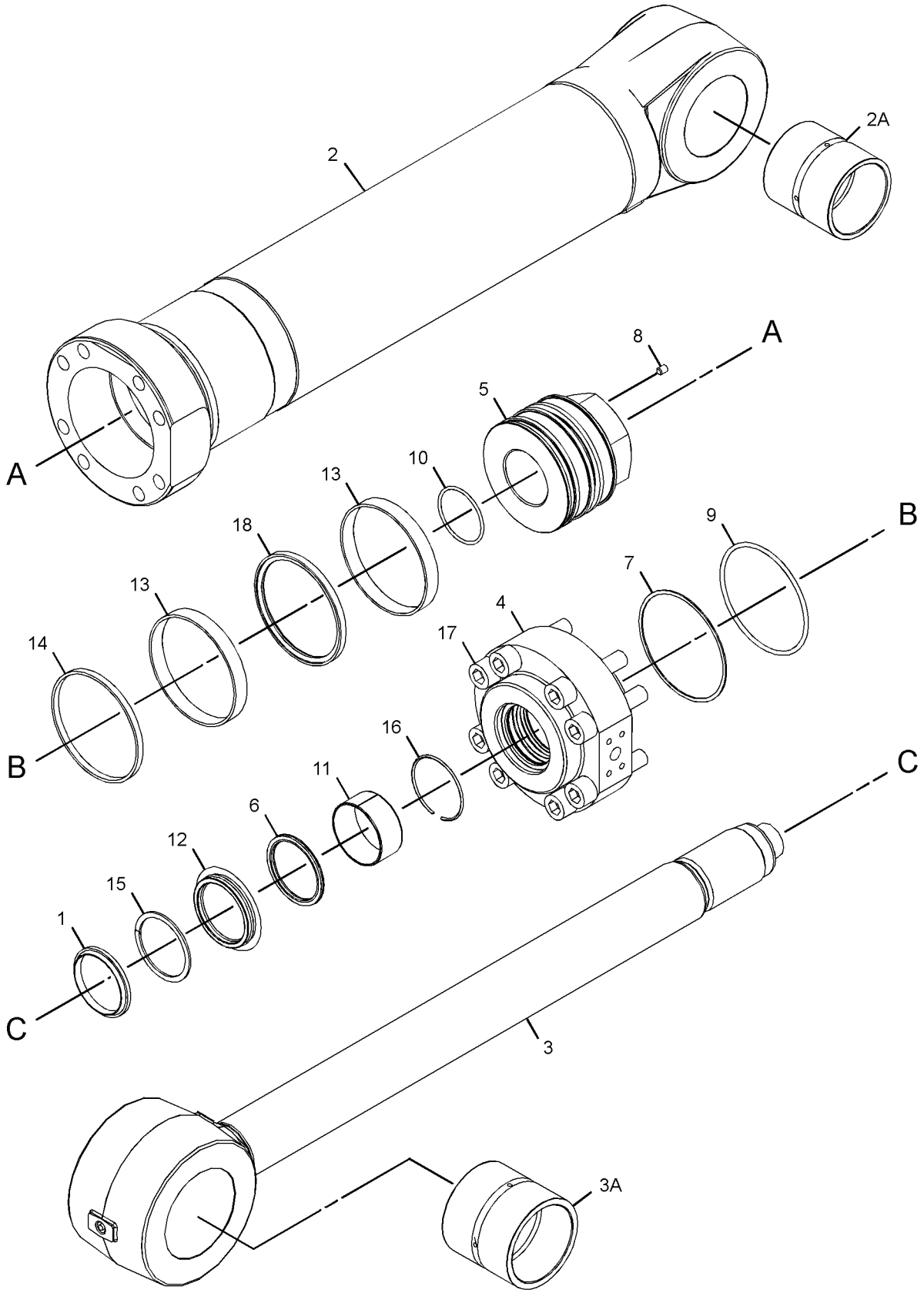

GRAPHIC #1 <END> g03066607

368-3248 CYLINDER GP-BUCKET

S/N: CH91-UP
110-MM (4.3-IN) BORE X 1055-MM (41.5-IN) STROKE
PART OF 368-3224 CYLINDER & SEAL GP-BUCKET
AN ATTACHMENT

SMCS-5457 **i05922335**

NOTE	REF NO	GRAPHIC REF	PART NUMBER	QTY	PART NAME 1 2 3 4 5 6 (PRODUCT LEVEL)	SEE PAGE
J	1	1	**165-9285**	1	SEAL-LIP TYPE	
	2	1	**340-8343**	1	PISTON	
	3	1	**368-3272**	1	CYLINDER AS-HYDRAULIC	
	3A	1	**105-7366**	1	BUSHING	
	4	1	**368-6821**	1	ROD & BEARING AS-CYLINDER	
	4A	1	**190-5335**	1	BUSHING	
	5	1	**374-5162**	1	HEAD	
J	6	1	**095-1716**	1	SEAL-O-RING	
J	7	1	**096-1054**	1	RING-BACKUP	
	8	1	**096-8139**	1	RING-RETAINING	
J	9	1	**105-7360**	1	RING-BACKUP	
	10	1	**114-0755**	1	BUSHING	
J	11	1	**143-8031**	1	RING	
J	12	1	**143-8034**	1	RING	
M	13	1	**143-8150**	1	LOCKNUT-SPECIAL	
J	14	1	**147-5819**	1	RING	
J	15	1	**170-9843**	1	SEAL-BUFFER	
J	16	1	**170-9859**	1	SEAL-U-CUP	
M	17	1	**7Y-5216**	8	BOLT-SOCKET HEAD (M20X2.5X80-MM)	
J	18	1	**9X-7301**	1	SEAL AS	
					AVAILABLE REPAIR KIT(S):	
J			**179-9625**	1	KIT-SEAL (BUCKET CYLINDER)	
					(ALSO INCLUDES SEAL RING)	

J - KIT MARKED J SERVICES PART(S) MARKED J
M - METRIC PART

368-3248 **CYLINDER GP-BUCKET (**contd.**)** **i05922335**

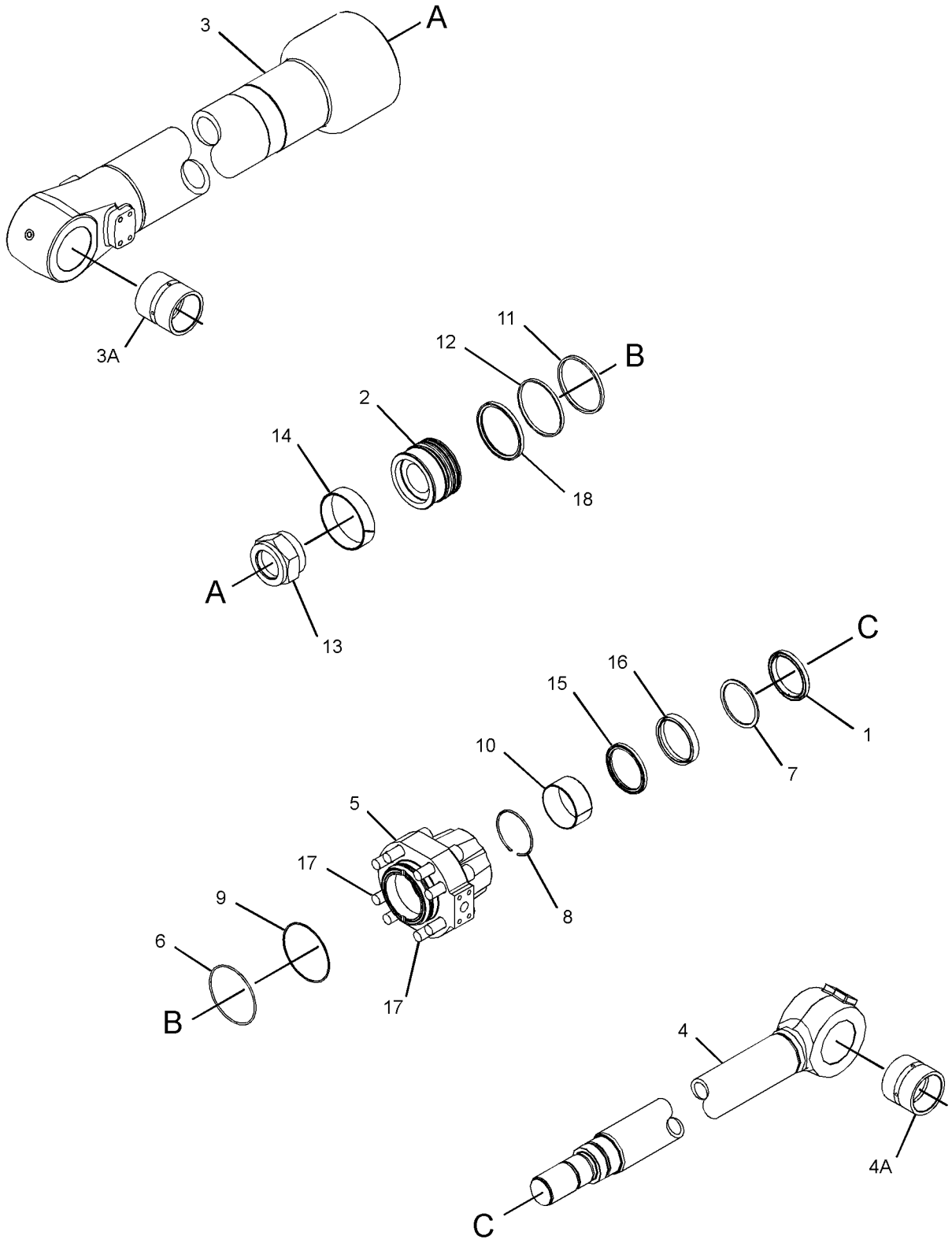

GRAPHIC #1 <END> g03062858

169-0329 CYLINDER GP-COUPLER

S/N: CH91-UP
60-MM (2.4-IN) BORE X 110-MM (4.3-IN) STROKE
PART OF 169-0701 LOCK GP-QUICK COUPLER
AN ATTACHMENT

SMCS-5133 **i05972697**

NOTE	REF NO	GRAPHIC REF	PART NUMBER	QTY	PART NAME 1 2 3 4 5 6 (PRODUCT LEVEL)	SEE PAGE
	1	1	**169-3923**	1	KIT-VALVE (QUICK COUPLER)	
					AVAILABLE REPAIR KIT(S):	
			202-7897	1	KIT-SEAL (COUPLER CYLINDER)	
					(INCLUDES 4 SEALS, 3 O-RING SEALS, 5 BACK-UP RINGS & 1 WIPER SEAL)	

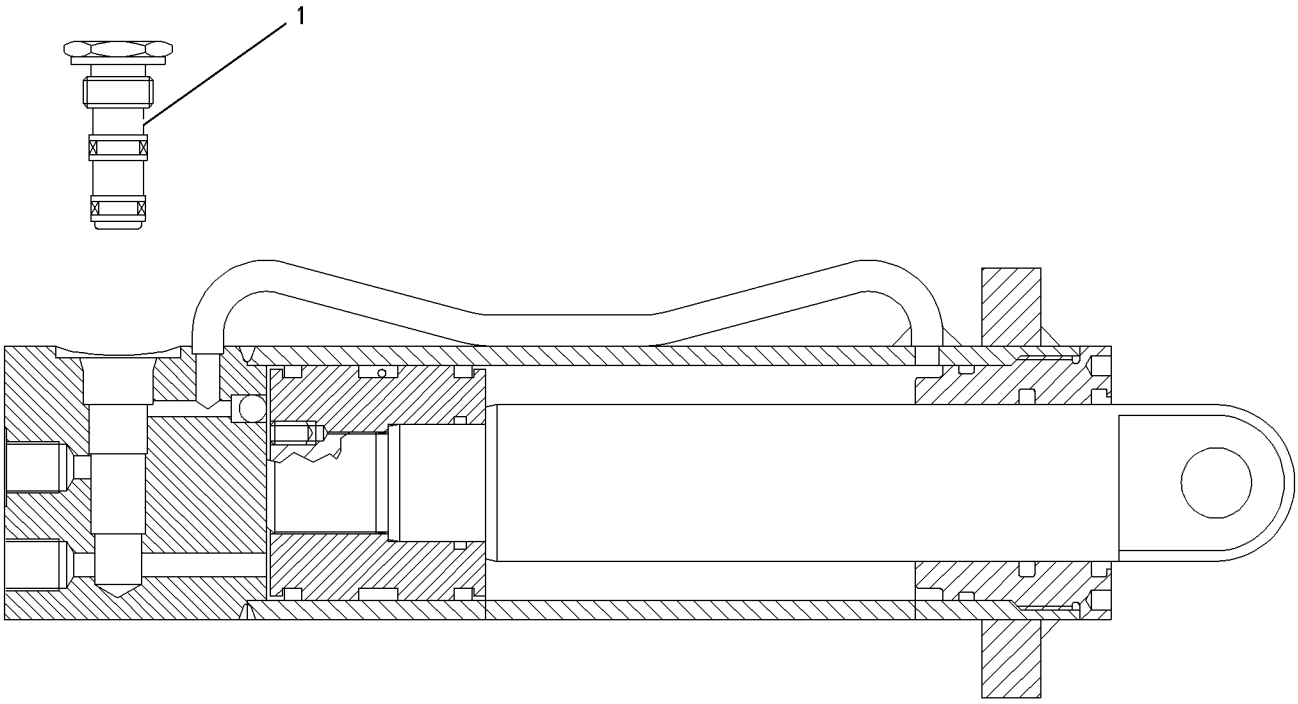

GRAPHIC #1 <END> g00577663

390-9505 CYLINDER GP-COUPLER

S/N: CH91-UP
63.5-MM (2.5-IN) BORE X 116.8-MM (4.6-IN) STROKE
PART OF 388-0067 COUPLER GP-QUICK
AN ATTACHMENT

SMCS-5133 **i07676247**

NOTE	REF NO	GRAPHIC REF	PART NUMBER	QTY	PART NAME 1 2 3 4 5 6 (PRODUCT LEVEL)	SEE PAGE
J	1	1	**237-0947**	1	VALVE GP-CHECK (PILOT OPERATED)	
	2	1	**3J-1907**	1	SEAL-O-RING	
	3	1	**3J-7354**	1	SEAL-O-RING	
	4	1	**9S-8002**	1	PLUG (7/16-20-THD)	
	5	1	**9S-8004**	1	PLUG (9/16-18-THD)	
	6	1	**9F-2167**	1	SCREW-PURGE (3/8-24X1.164-IN)	
					AVAILABLE REPAIR KIT(S):	
J			**213-8433**	1	KIT-SEAL (CHECK VALVE)	
			453-6523	1	KIT-PACKING (COUPLER CYLINDER)	
					(INCLUDES O-RINGS,SEALS & POLYPAK)	

J - KIT MARKED J SERVICES PART(S)MARKED J

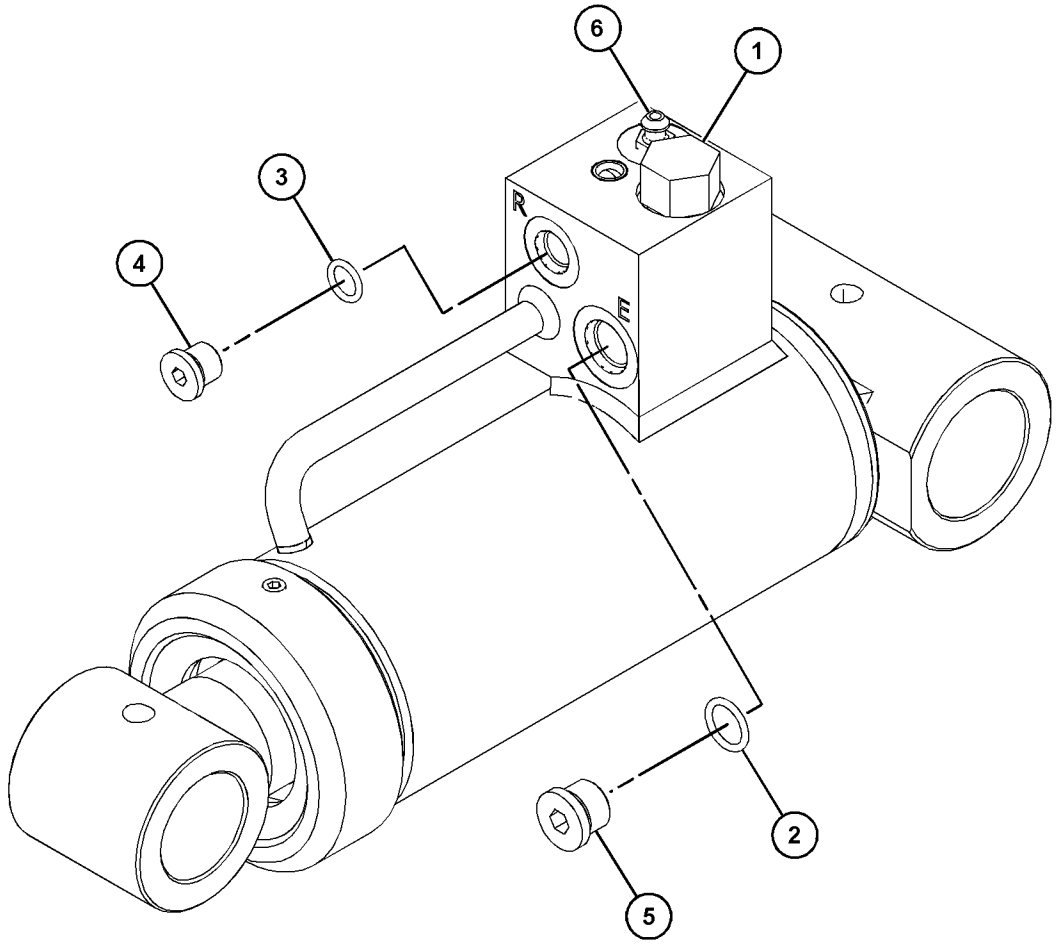

GRAPHIC #1 <END> g03711887

358-8779 CYLINDER GP-HYDRAULIC—DOZER ANGLE

S/N: CH91-UP
100-MM (3.94-IN) BORE X 235-MM (9.25-IN) STROKE
PART OF 448-8649 BLADE & MOUNTING GP
AN ATTACHMENT
TYPE 1

SMCS-4303, 5102, 5105, 5116, 5138, 5149, 5362, 5576, 5816, 7201, 7562

i05926002

NOTE	REF NO	GRAPHIC REF	PART NUMBER	QTY	PART NAME 1 2 3 4 5 6 (PRODUCT LEVEL)	SEE PAGE
	1	1	**368-5762**	1	CYLINDER AS	
	2	1	**368-5763**	1	ROD	
	3	1	**118-3113**	1	PISTON	
	4	1	**118-3114**	1	COLLAR	
	5	1	**221-3546**	1	PISTON	
	6	1	**125-6996**	1	RETAINER	
	7	1	**118-3117**	1	CONE	
	8	1	**125-6998**	1	PLUG	
	9	1	**270-0174**	1	RETAINER	
	10	1	**142-1623**	1	PIN	
	11	1	**142-2946**	1	PLUG	
J	12	1	**118-3119**	1	SEAL	
J	13	1	**118-3120**	1	RING	
J	14	1	**118-3121**	2	RING	
J	15	1	**8U-1958**	1	SEAL-O-RING	
J	16	1	**118-3123**	1	RING-BACKUP	
J	17	1	**118-3122**	1	SEAL-O-RING	
J	18	1	**118-3124**	1	RING	
J	19	1	**118-3125**	1	SEAL-O-RING	
J	20	1	**118-3126**	1	RING-BACKUP	
J	21	1	**118-3127**	1	RING	
J	22	1	**118-3128**	1	SEAL-O-RING	
J	23	1	**118-3129**	1	RING-BACKUP	
J	24	1	**4J-5351**	3	SEAL-O-RING	
J	25	1	**118-3130**	2	RING-BACKUP	
J	26	1	**118-3131**	2	SEAL-O-RING	
	27	1	**118-3132**	2	SPRING	
M	28	1	**118-3133**	1	NUT (M45X1.5-THD)	
	29	1	**118-2731**	1	PIN	
	30	1	**118-3134**	2	BEARING	
					AVAILABLE REPAIR KIT(S):	
J			**118-3135**	1	KIT-SEAL	

J - KIT MARKED J SERVICES PART(S) MARKED J
M - METRIC PART

358-8779 **CYLINDER GP-HYDRAULIC** (contd.) **i05926002**

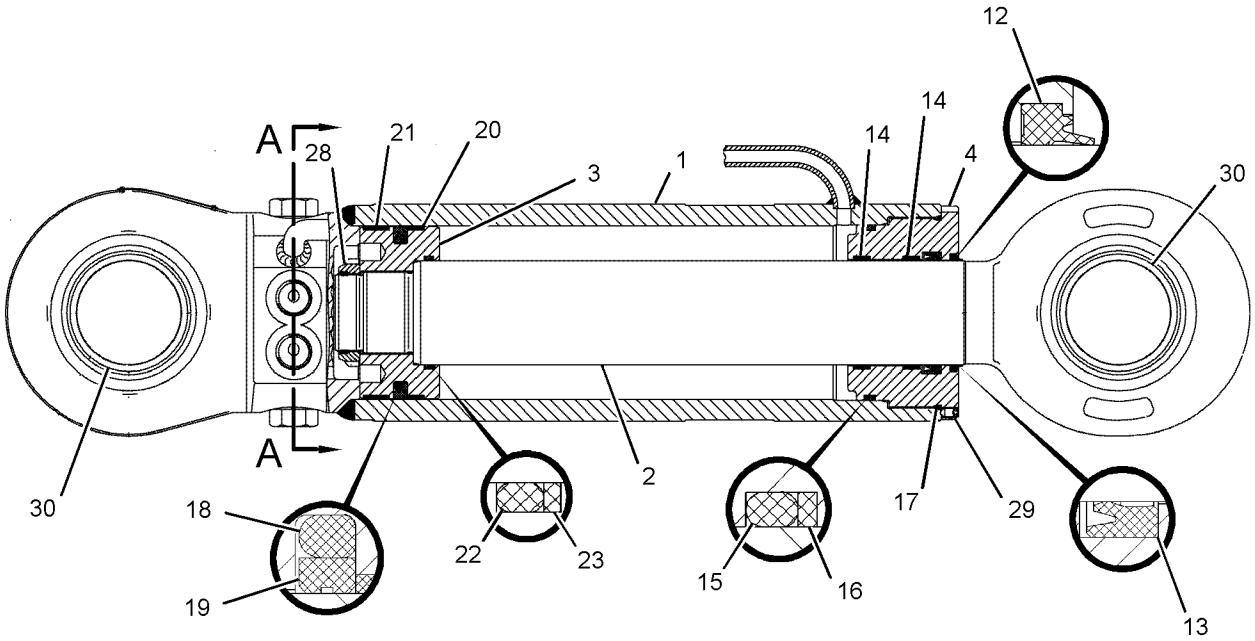

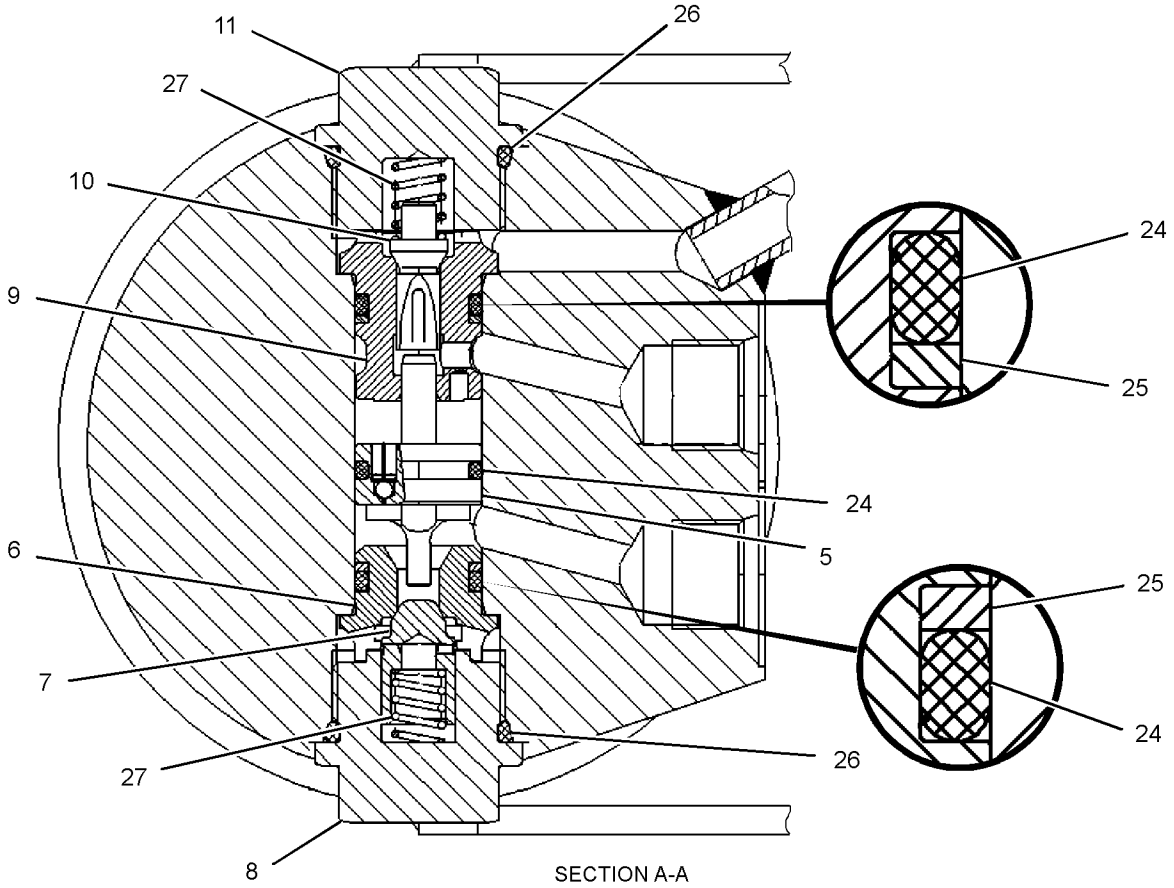

SECTION A-A

GRAPHIC #1 <END> g02400076

358-8779 CYLINDER GP-HYDRAULIC—DOZER ANGLE

S/N: CH91-UP
100-MM (3.94-IN) BORE X 235-MM (9.25-IN) STROKE
PART OF 448-8649 BLADE & MOUNTING GP
AN ATTACHMENT
TYPE 2

SMCS-4303, 5102, 5105, 5116, 5138, 5149, 5362, 5576, 5816, 7201, 7562

i07715160

NOTE	REF NO	GRAPHIC REF	PART NUMBER	QTY	PART NAME 1 2 3 4 5 6 (PRODUCT LEVEL)	SEE PAGE
	1	1	**368-5762**	1	CYLINDER AS	
	2	1	**368-5763**	1	ROD	
	3	1	**118-3113**	1	PISTON	
	4	1	**118-3114**	1	COLLAR	
	5	1	**221-3546**	1	PISTON	
	6	1	**125-6996**	1	RETAINER	
	7	1	**118-3117**	1	CONE	
	8	1	**125-6998**	1	PLUG	
	9	1	**270-0174**	1	RETAINER	
	10	1	**142-1623**	1	PIN	
J	13	1	**118-3120**	1	RING	
J	14	1	**118-3121**	2	RING	
J	15	1	**8U-1958**	1	SEAL-O-RING	
J	16	1	**118-3123**	1	RING-BACKUP	
J	17	1	**118-3122**	1	SEAL-O-RING	
J	18	1	**118-3124**	1	RING	
J	19	1	**118-3125**	1	SEAL-O-RING	
J	20	1	**118-3126**	1	RING-BACKUP	
J	21	1	**118-3127**	1	RING	
J	23	1	**118-3129**	1	RING-BACKUP	
J	24	1	**4J-5351**	3	SEAL-O-RING	
J	25	1	**118-3130**	2	RING-BACKUP	
J	26	1	**118-3131**	2	SEAL-O-RING	
	27	1	**118-3132**	2	SPRING	
M	28	1	**118-3133**	1	NUT (M45X1.5-THD)	
	29	1	**118-2731**	1	PIN	
C	30	1	**473-6336**	2	BEARING	
					AVAILABLE REPAIR KIT(S):	
J			**118-3135**	1	KIT-SEAL	
					(ALSO INCLUDES SEAL & O-RING SEAL)	

C - CHANGE FROM PREVIOUS TYPE
J - KIT MARKED J SERVICES PART(S) MARKED J
M - METRIC PART

358-8779 **CYLINDER GP-HYDRAULIC** (contd.) **i07715160**

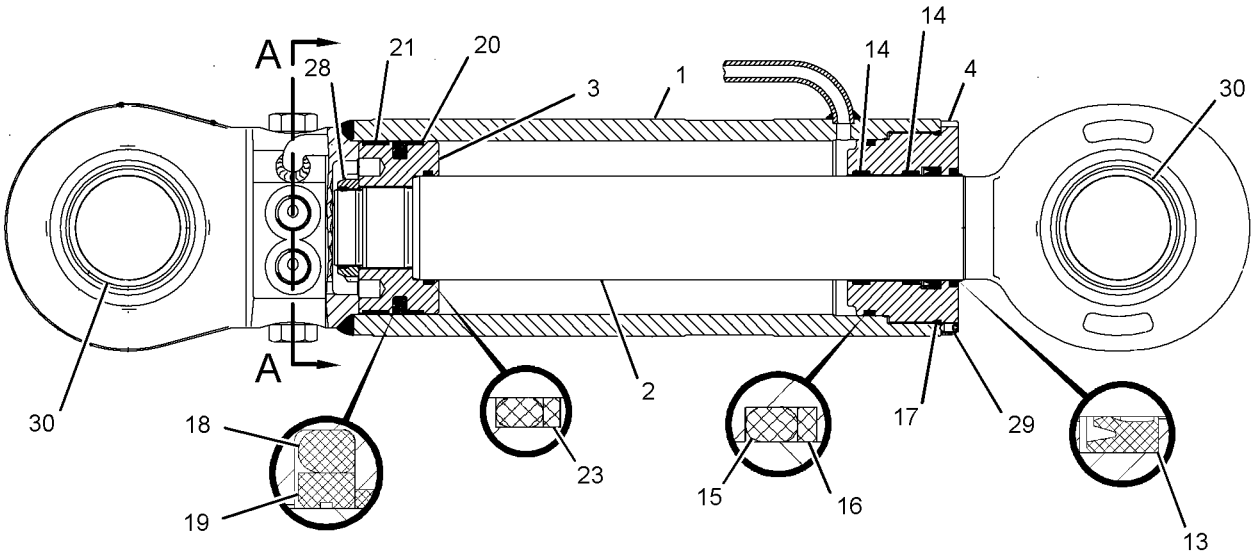

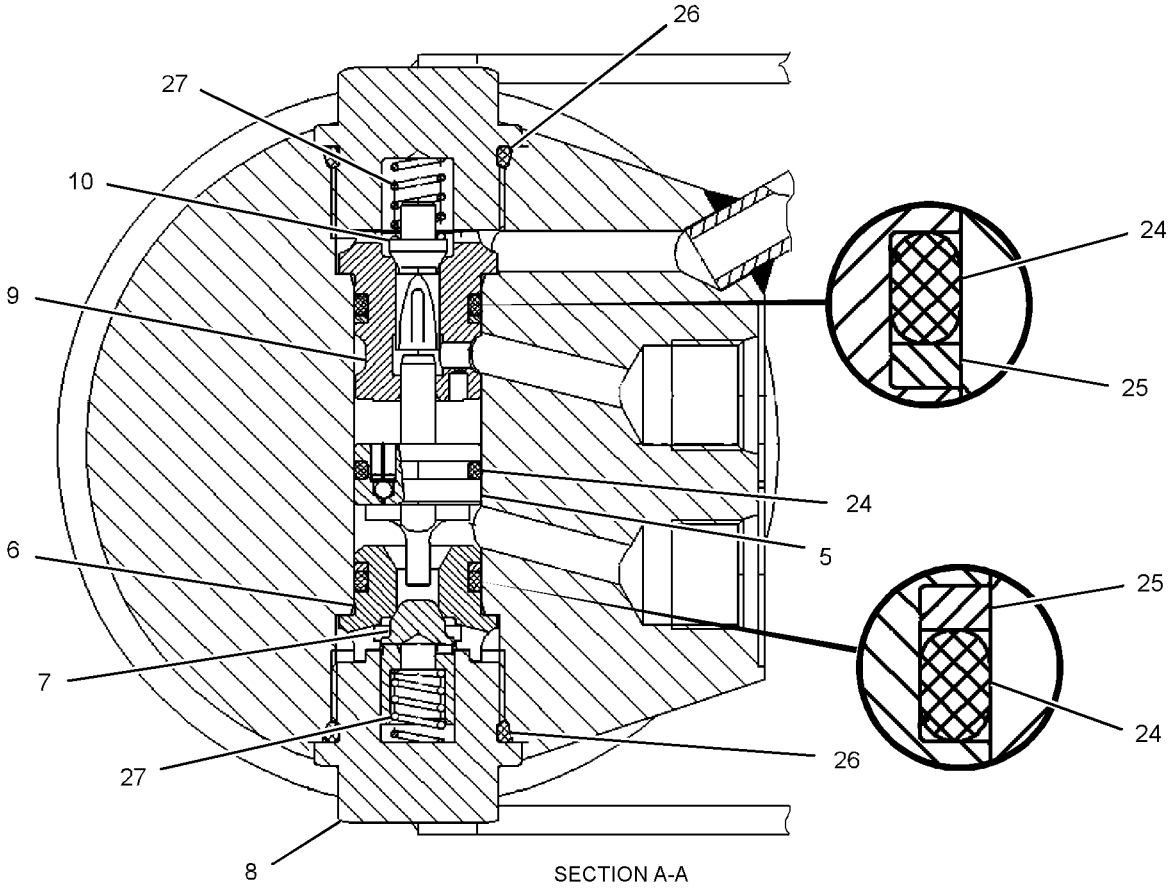

SECTION A-A

GRAPHIC #1 <END> g06412123

368-3243 CYLINDER GP-HYDRAULIC

S/N: CH91-UP
130-MM (5.1-IN) BORE X 906-MM (35.7-IN) STROKE
PART OF 368-3219 CYLINDER & SEAL GP-BOOM
AN ATTACHMENT

SMCS-4303, 5102, 5105, 5116, 5138, 5149, 5362, 5576, 5816, 7201, 7562

i05927203

NOTE	REF NO	GRAPHIC REF	PART NUMBER	QTY	PART NAME 1 2 3 4 5 6 (PRODUCT LEVEL)	SEE PAGE
J	1	1	**165-9287**	1	SEAL-LIP TYPE	
J	2	1	**216-0003**	1	SEAL-U-CUP	
	3	1	**368-3267**	1	CYLINDER AS-HYDRAULIC	
	3A	1	**258-8506**	1	BUSHING	
	4	1	**368-6816**	1	ROD & BEARING AS-CYLINDER	
	4A	1	**258-8507**	1	BUSHING	
	5	1	**374-9053**	1	HEAD	
	6	1	**374-9055**	1	PISTON	
J	7	1	**170-9845**	1	SEAL-BUFFER	
	8	1	**093-1571**	1	RING-RETAINING	
J	9	1	**095-1631**	1	SEAL-O-RING	
J	10	1	**096-1588**	1	RING-BACKUP	
	11	1	**114-0758**	1	BUSHING	
J	12	1	**150-5884**	1	RING	
J	13	1	**179-9771**	2	RING	
	14	1	**441-8129**	1	STOP	
J	15	1	**7I-1352**	1	RING-SEAL	
	16	1	**7Y-4622**	1	LOCKNUT (SPECIAL)	
J	17	1	**7Y-4633**	1	RING-BACKUP	
M	18	1	**7Y-5216**	8	BOLT-SOCKET HEAD (M20X2.5X80-MM)	
J	19	1	**9X-3595**	1	SEAL AS	
					AVAILABLE REPAIR KIT(S):	
J			**215-9986**	1	KIT-SEAL (HYDRAULIC CYLINDER)	

J - KIT MARKED J SERVICES PART(S) MARKED J
M - METRIC PART

368-3243 **CYLINDER GP-HYDRAULIC (**contd.**)** **i05927203**

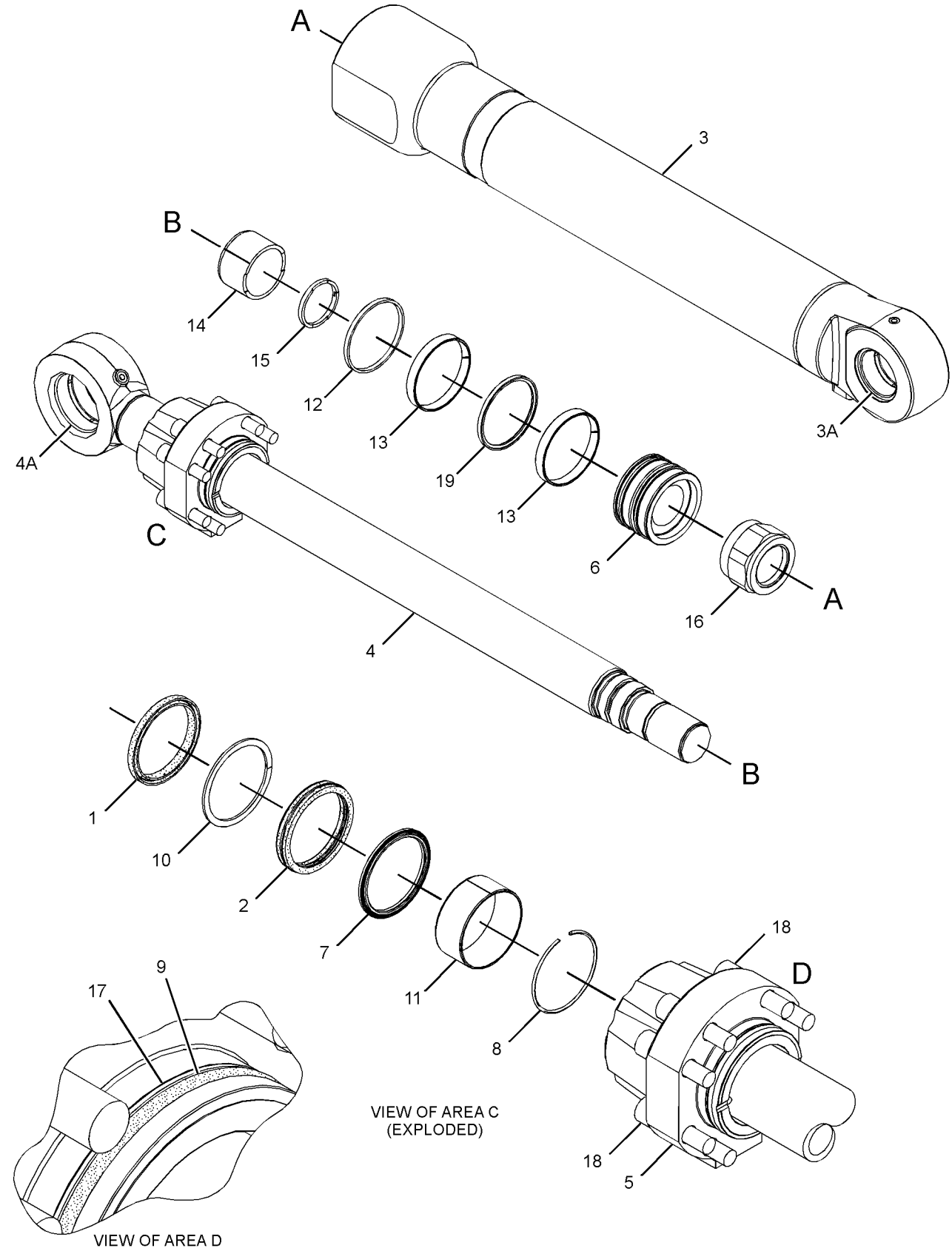

GRAPHIC #1 <END> g03066536

368-3244 CYLINDER GP-HYDRAULIC

S/N: CH91-UP
130-MM (5.1-IN) BORE X 906-MM (35.7-IN) STROKE
PART OF 368-3220 CYLINDER & SEAL GP-BOOM
AN ATTACHMENT

SMCS-4303, 5102, 5105, 5116, 5138, 5149, 5362, 5576, 5816, 7201, 7562

i05922272

NOTE	REF NO	GRAPHIC REF	PART NUMBER	QTY	PART NAME 1 2 3 4 5 6 (PRODUCT LEVEL)	SEE PAGE
J	1	1	**165-9287**	1	SEAL-LIP TYPE	
J	2	1	**216-0003**	1	SEAL-U-CUP	
	3	1	**368-3267**	1	CYLINDER AS-HYDRAULIC	
	3A	1	**258-8506**	1	BUSHING	
	4	1	**368-6817**	1	ROD & BEARING AS-CYLINDER	
	4A	1	**258-8507**	1	BUSHING	
	5	1	**374-9053**	1	HEAD	
	6	1	**374-9055**	1	PISTON	
J	7	1	**170-9845**	1	SEAL-BUFFER	
	8	1	**093-1571**	1	RING-RETAINING	
J	9	1	**095-1631**	1	SEAL-O-RING	
J	10	1	**096-1588**	1	RING-BACKUP	
	11	1	**114-0758**	1	BUSHING	
J	12	1	**150-5884**	1	RING	
J	13	1	**179-9771**	2	RING	
	14	1	**441-8129**	1	STOP	
J	15	1	**7I-1352**	1	RING-SEAL	
	16	1	**7Y-4622**	1	LOCKNUT (SPECIAL)	
J	17	1	**7Y-4633**	1	RING-BACKUP	
M	18	1	**7Y-5216**	8	BOLT-SOCKET HEAD (M20X2.5X80-MM)	
J	19	1	**9X-3595**	1	SEAL AS	
					AVAILABLE REPAIR KIT(S):	
J			**215-9986**	1	KIT-SEAL (HYDRAULIC CYLINDER)	

J - KIT MARKED J SERVICES PART(S) MARKED J
M - METRIC PART

368-3244 **CYLINDER GP-HYDRAULIC** (contd.) **i05922272**

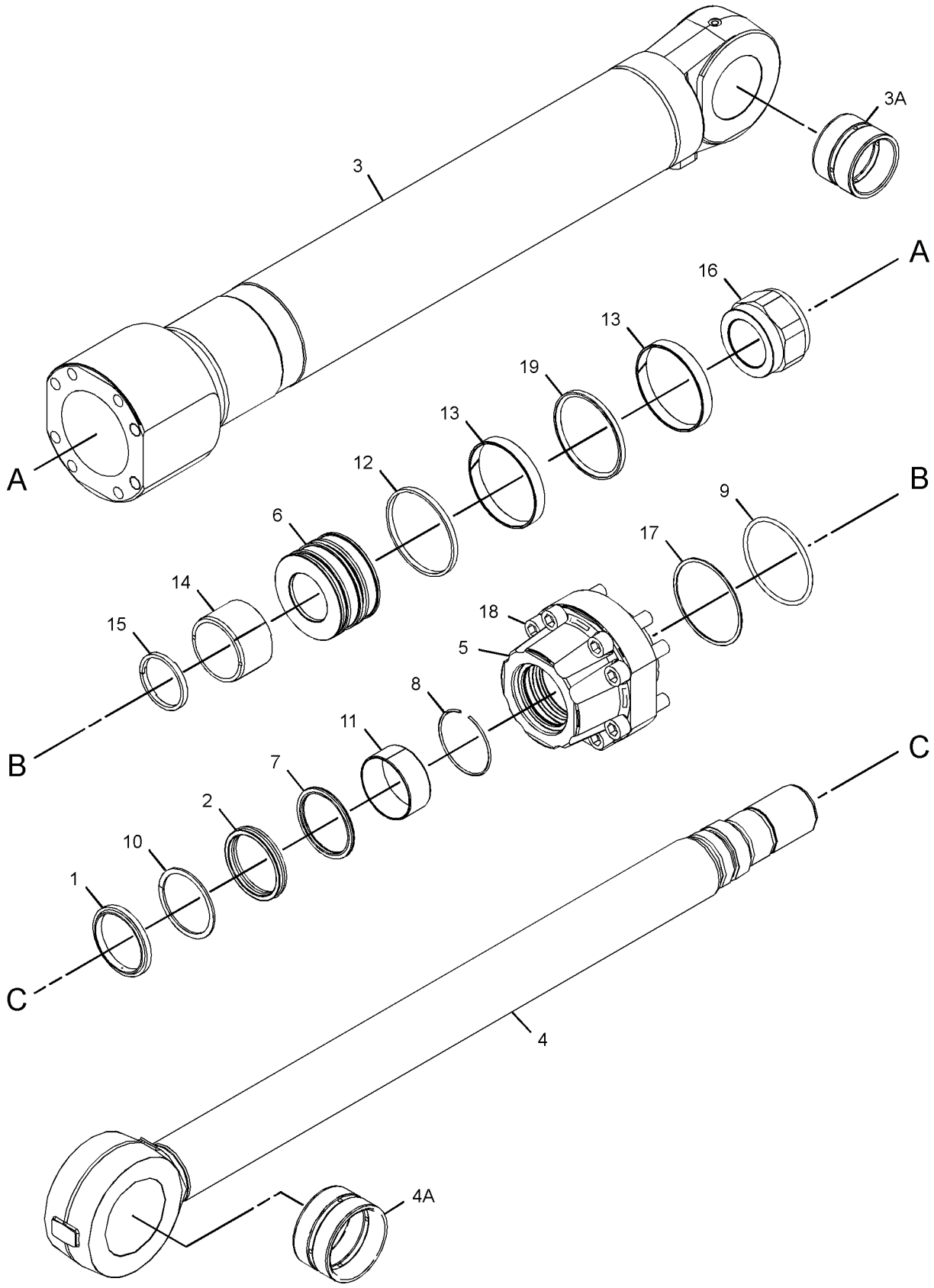

GRAPHIC #1 <END> g03066499

188-4991 CYLINDER GP-STABILIZER

S/N: CH91-UP
130-MM (4-IN) BORE X 492-MM (19.4) STROKE
PART OF 354-7130, 455-4597 STABILIZER AR
AN ATTACHMENT

SMCS-5468 **i05922699**

NOTE	REF NO	GRAPHIC REF	PART NUMBER	QTY	PART NAME 1 2 3 4 5 6 (PRODUCT LEVEL)	SEE PAGE
	1	1	**200-0916**	1	CYLINDER AS	
	2	1	**200-0917**	1	ROD	
	3	1	**200-0918**	1	PISTON	
	4	1	**200-0919**	1	COLLAR	
	5	1	**221-3539**	1	PISTON	
	6	1	**118-3116**	2	RETAINER	
	7	1	**118-3117**	2	CONE	
	8	1	**5W-1274**	2	PLUG	
J	9	1	**225-8698**	1	SEAL	
J	10	1	**118-2716**	1	RING	
J	11	1	**118-2717**	2	RING	
J	12	1	**135-7933**	1	SEAL-O-RING	
J	13	1	**135-7934**	1	RING-BACKUP	
J	14	1	**135-7935**	1	SEAL-O-RING	
J	15	1	**135-7936**	1	RING	
J	16	1	**135-7937**	1	SEAL-O-RING	
J	17	1	**135-7938**	1	RING-BACKUP	
J	18	1	**135-7939**	1	RING	
J	19	1	**5W-6388**	1	SEAL-O-RING	
J	20	1	**118-2727**	1	RING-BACKUP	
J	21	1	**4J-5351**	3	SEAL-O-RING	
J	22	1	**118-3130**	2	RING-BACKUP	
J	23	1	**118-3131**	2	SEAL-O-RING	
	24	1	**118-3132**	2	SPRING	
M	25	1	**118-2730**	1	NUT (M52X1.5-THD, LH)	
	26	1	**118-2731**	1	PIN	
	27	1	**8G-4189**	2	BEARING-SELF-ALIGNING	
	28	1	**8T-0707**	4	RING-RETAINING (INTERNAL)	
	29	1	**118-2732**	1	FITTING-GREASE	
J	30	1	**221-3541**	2	RING-BACKUP	
					AVAILABLE REPAIR KIT(S):	
J			**200-0920**	1	KIT-SEAL (STABILIZER CYLINDER)	

J - KIT MARKED J SERVICES PART(S) MARKED J
M - METRIC PART

188-4991 **CYLINDER GP-STABILIZER** (contd.) **i05922699**

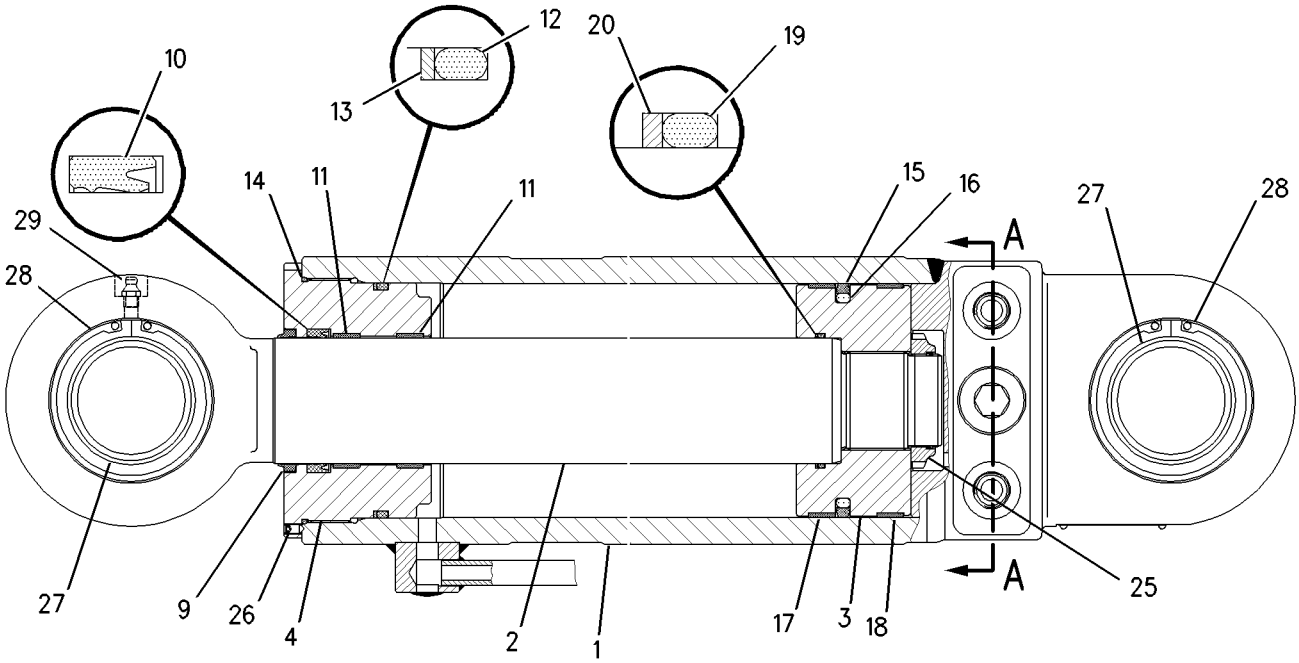

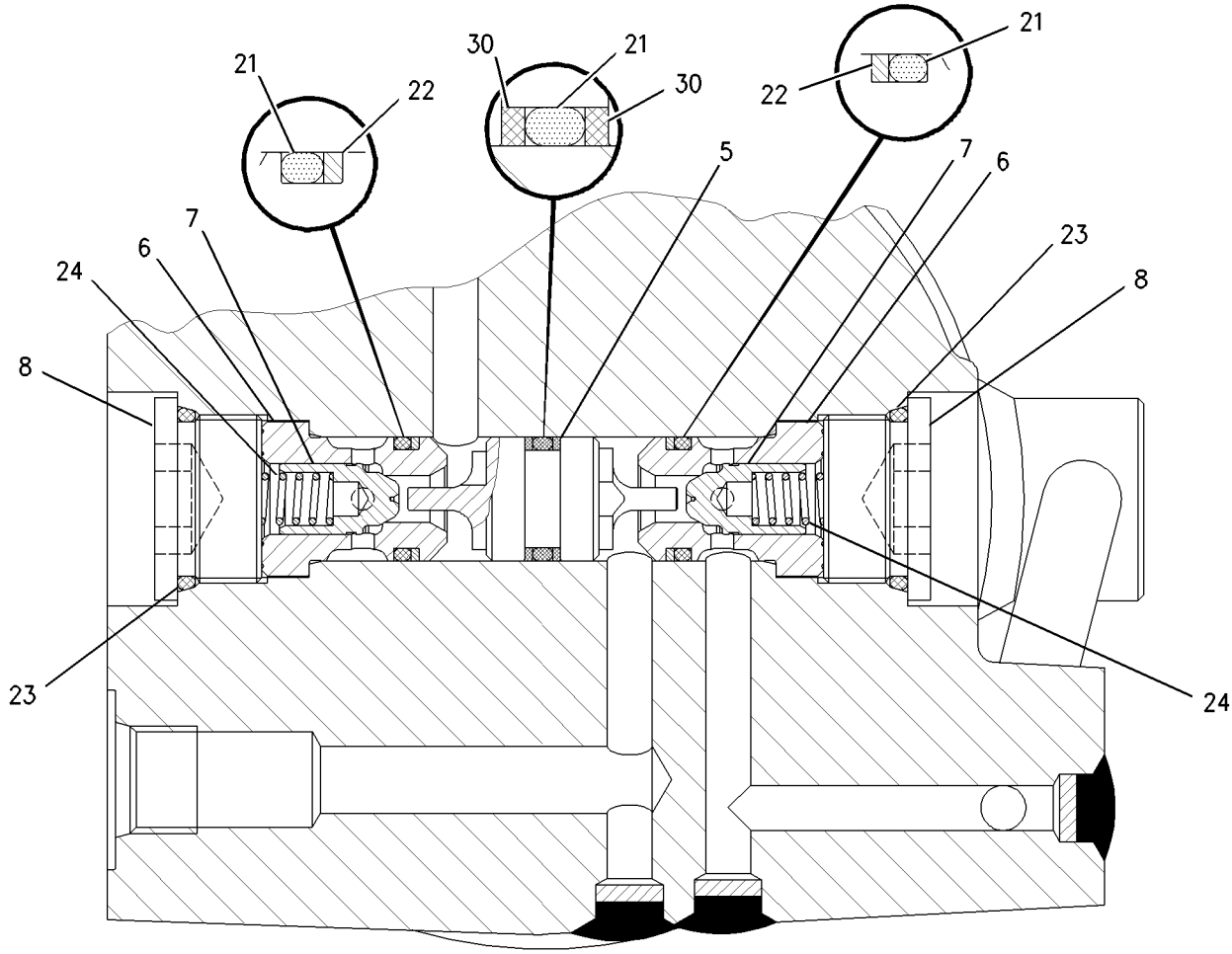

SECTION A–A

GRAPHIC #1 <END> g00912709

375-1285 CYLINDER GP-STEERING

S/N: CH91-UP
PART OF 331-1380 AXLE GP-STEERING
ALSO AN ATTACHMENT

SMCS-4303 **i05867039**

NOTE	REF NO	GRAPHIC REF	PART NUMBER	QTY	PART NAME 1 2 3 4 5 6 (PRODUCT LEVEL)	SEE PAGE
	1	1	**243-0920**	1	ROD AS	
	2	1	**375-1289**	1	GUIDE	
	3	1	**387-2949**	1	RING-RETAINING	
	4	1	**243-0923**	1	RING-SNAP	
	5	1	**243-0925**	1	RING-RETAINING	
	6	1	**243-0926**	1	FLANGE	
					PARTS SHOWN IN GRAPHIC(S) WITHOUT A REFERENCE NUMBER ARE NOT SERVICED SEPARATELY	
					AVAILABLE REPAIR KIT(S):	
			375-1287	1	KIT-SEAL & RING (STEERING CYLINDER)	
					(INCLUDES PISTON RING, RING SEALS, O-RING SELAS, WIPER RING, ROD SEAL & PARTS MARKED J IN THE GRAPHIC)	

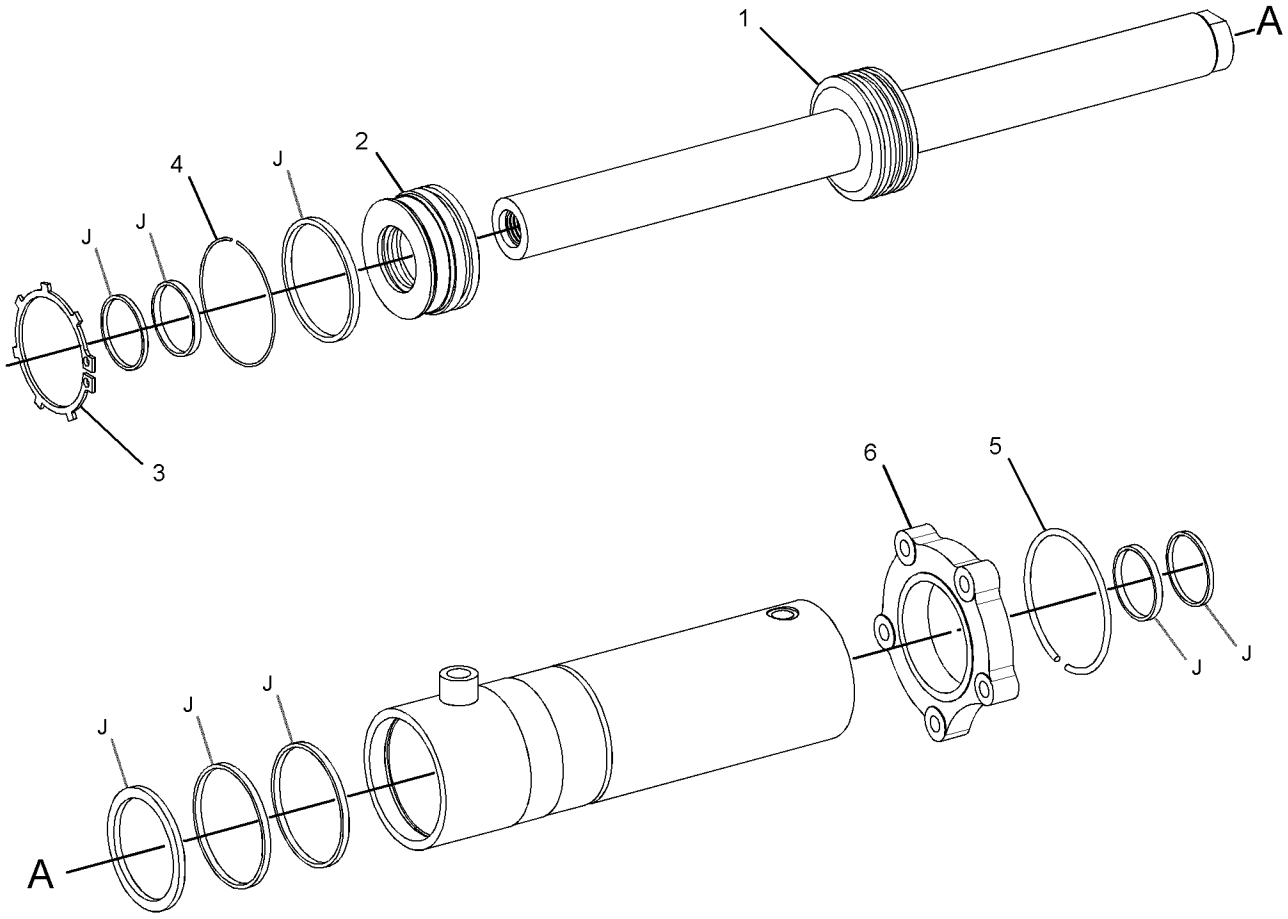

GRAPHIC #1 <END> g03024536

368-3246 CYLINDER GP-STICK

S/N: CH91-UP
130-MM (5.2-IN) BORE X 1205-MM (47.5-IN) STROKE
PART OF 368-3222 CYLINDER & SEAL GP-STICK
AN ATTACHMENT

SMCS-5458 **i05922282**

NOTE	REF NO	GRAPHIC REF	PART NUMBER	QTY	PART NAME 1 2 3 4 5 6 (PRODUCT LEVEL)	SEE PAGE
J	1	1	**165-9287**	1	SEAL-LIP TYPE	
J	2	1	**216-0003**	1	SEAL-U-CUP	
	3	1	**368-3270**	1	CYLINDER AS-STICK	
	3A	1	**128-3031**	1	BUSHING	
	4	1	**368-6819**	1	ROD & BEARING AS-CYLINDER	
	4A	1	**128-3031**	1	BUSHING	
	5	1	**374-9055**	1	PISTON	
	6	1	**374-9074**	1	HEAD	
J	7	1	**170-9845**	1	SEAL-BUFFER	
	8	1	**093-1571**	1	RING-RETAINING	
	9	1	**095-0929**	2	RING-RETAINING	
J	10	1	**095-1631**	1	SEAL-O-RING	
J	11	1	**096-1588**	1	RING-BACKUP	
	12	1	**103-8378**	1	RING-RETAINING	
	13	1	**103-8379**	1	RING	
	14	1	**103-8380**	1	STOP	
	15	1	**114-0758**	1	BUSHING	
J	16	1	**150-5884**	1	RING	
J	17	1	**179-9771**	2	RING	
	18	1	**441-8129**	1	STOP	
J	19	1	**7I-1352**	1	RING-SEAL	
	20	1	**7Y-4622**	1	LOCKNUT (SPECIAL)	
J	21	1	**7Y-4633**	1	RING-BACKUP	
M	22	1	**7Y-5216**	8	BOLT-SOCKET HEAD (M20X2.5X80-MM)	
J	23	1	**9X-3595**	1	SEAL AS	
					AVAILABLE REPAIR KIT(S):	
J			**215-9986**	1	KIT-SEAL (STICK CYLINDER)	

J - KIT MARKED J SERVICES PART(S) MARKED J
M - METRIC PART

368-3246 **CYLINDER GP-STICK** (contd.) **i05922282**

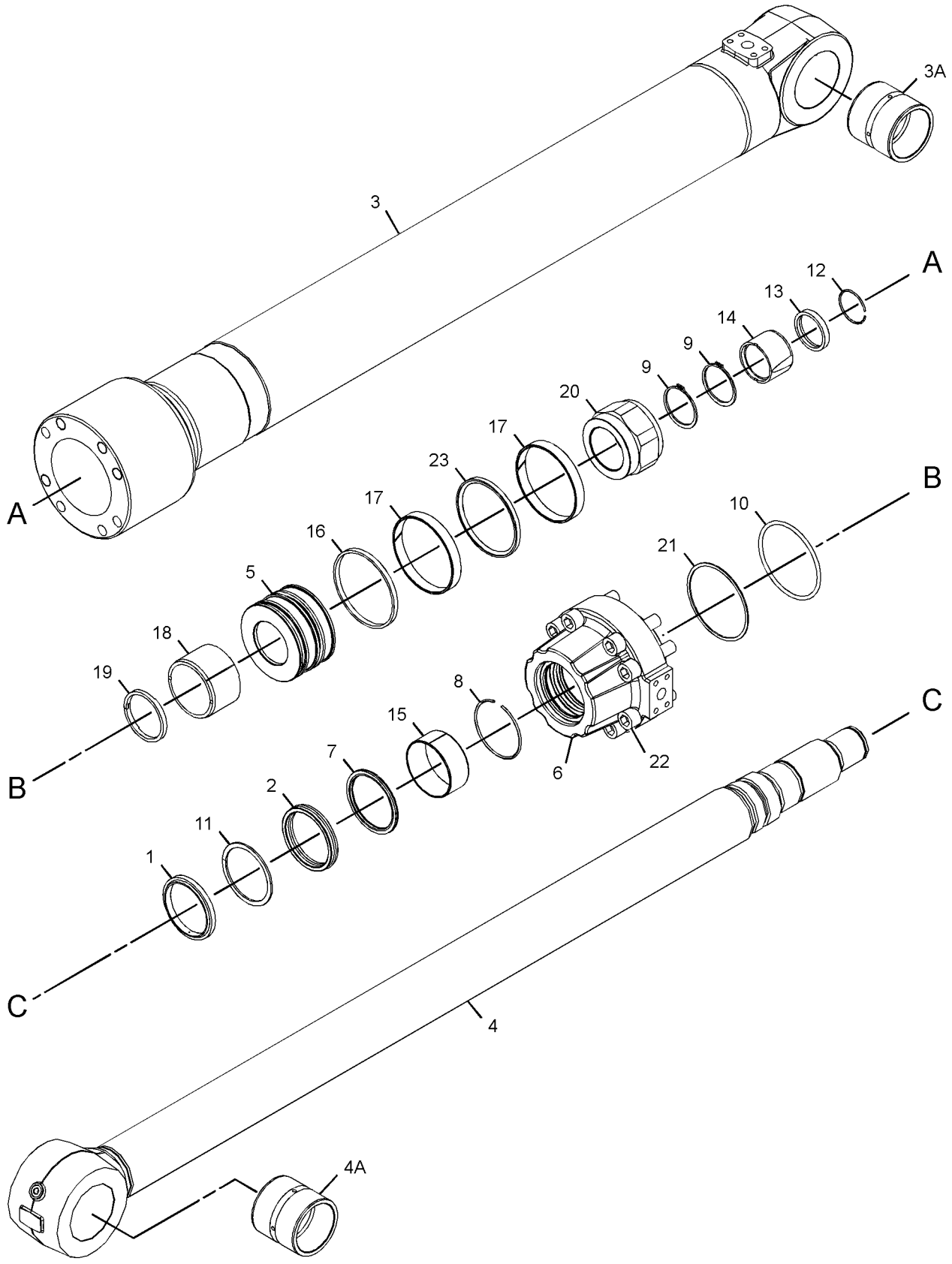

GRAPHIC #1 <END> g03066818

430-9488 DRIVE & MTG GP-PUMP

S/N: CH91-UP

PART OF 432-8567 PUMP GP-MAIN HYDRAULIC

ALSO AN ATTACHMENT

SMCS-3108, 5070 **i05970117**

NOTE	REF NO	GRAPHIC REF	PART NUMBER	QTY	PART NAME 1 2 3 4 5 6 (PRODUCT LEVEL)	SEE PAGE
	1	1	**430-9491**	1	FLANGE	
	2	1	**216-0088**	1	HUB-CLUTCH	
	3	1	**2H-3934**	1	SEAL-O-RING	
	4	1	**5F-3106**	1	SEAL-O-RING	
M	5	1	**8T-3957**	4	BOLT-SOCKET HEAD (M12X1.75X30-MM)	
	6	1	**216-0084**	1	SPRING	
	7	1	**216-0086**	1	BUSHING-GUIDE	

M - METRIC PART

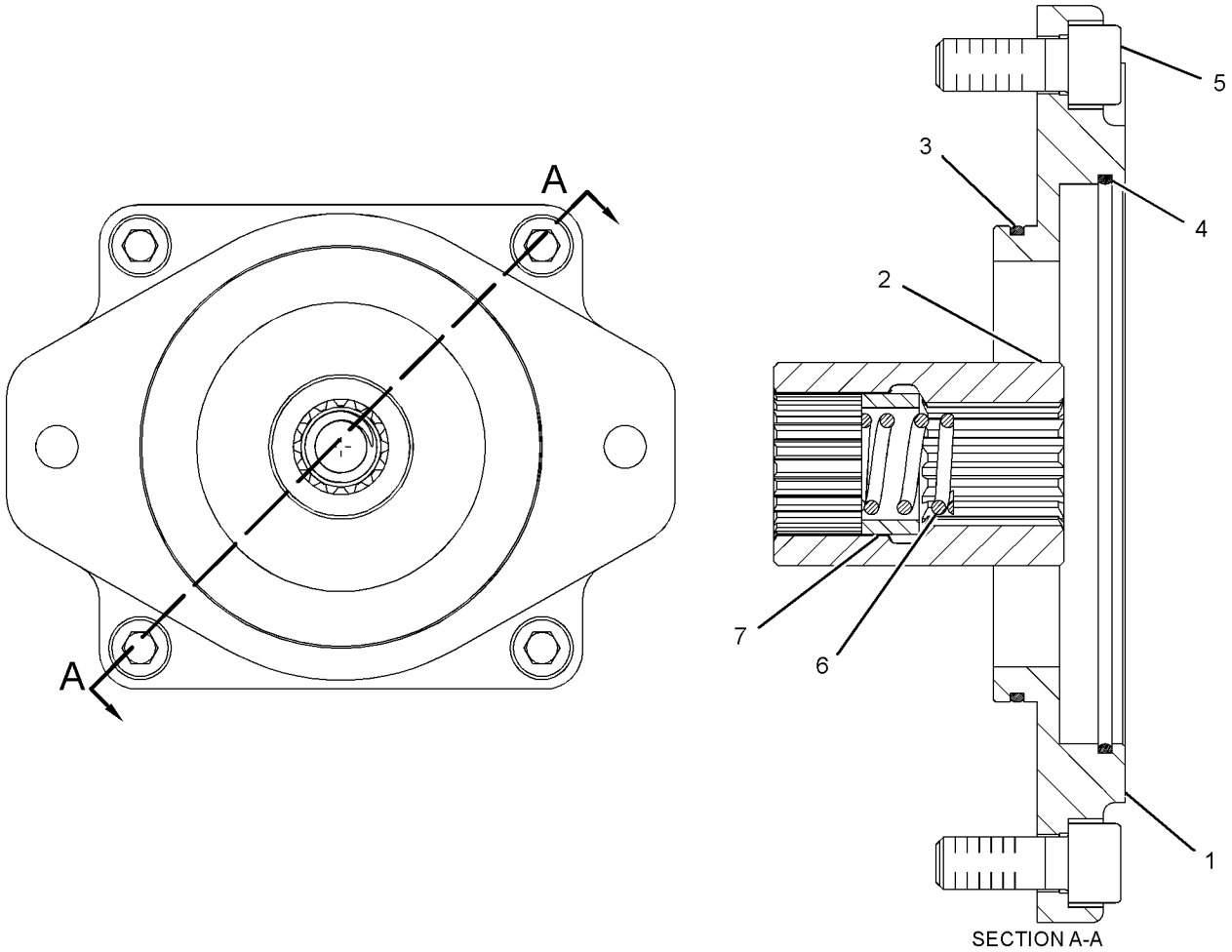

GRAPHIC #1 <END> g01882423

111-1858 DRIVE GP-SWING

S/N: CH91-UP
PART OF 449-2824 CHASSIS AR
ALSO AN ATTACHMENT

SMCS-5459 **i05934480**

NOTE	REF NO	GRAPHIC REF	PART NUMBER	QTY	PART NAME 1 2 3 4 5 6 (PRODUCT LEVEL)	SEE PAGE
Y	1	1	*368-2783*	1	MOTOR GP-SWING	587
Y	2	1	**152-7372**	1	DRIVE GP-SWING	377
M	3	1	**108-1781**	4	BOLT-SOCKET HEAD (M12X1.75X35-MM)	
M	4	1	**113-2003**	16	BOLT-SOCKET HEAD (M16X2X40-MM)	

M - METRIC PART
Y - SEPARATE ILLUSTRATION

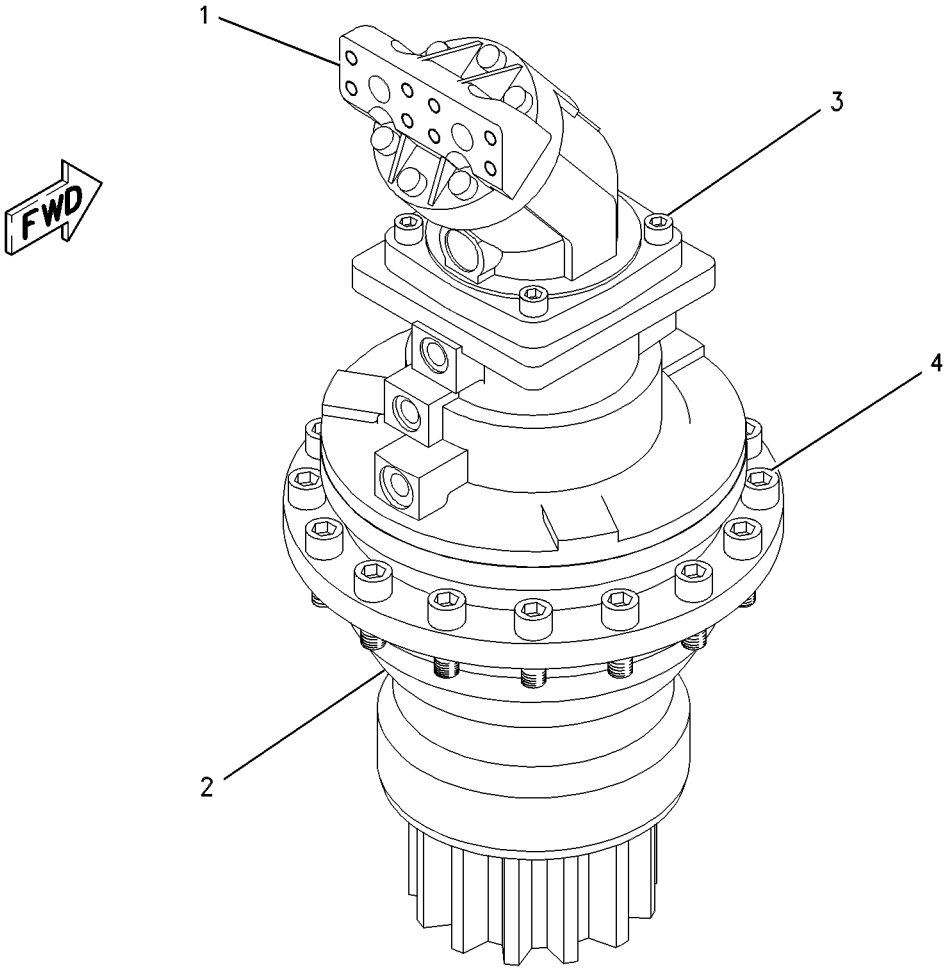

GRAPHIC #1 <END> g00658853

152-7372 DRIVE GP-SWING

S/N: CH91-UP
PART OF 111-1858 DRIVE GP-SWING
ALSO AN ATTACHMENT

SMCS-5459 **i05972402**

NOTE	REF NO	GRAPHIC REF	PART NUMBER	QTY	PART NAME 1 2 3 4 5 6 (PRODUCT LEVEL)	SEE PAGE
	1	1	**155-0856**	1	SHAFT	
	2	1	**155-0857**	3	GEAR-PLANETARY (33-TEETH)	
	3	1	**155-0858**	1	CARRIER	
	4	1	**155-0824**	3	PIN	
	5	1	**082-3084**	6	WASHER	
	6	1	**082-3085**	6	WASHER	
	7	1	**132-4292**	63	BEARING AS-NEEDLE	
	8	1	**095-0919**	3	RING-RETAINING	
	9	1	**155-0864**	1	HOUSING AS-SWING	
	10	1	**155-0865**	1	SEAL-LIP TYPE	
	11	1	**155-0866**	1	SEAL	
	12	1	**155-0867**	1	PINION	
	13	1	**155-0868**	1	WASHER (100X169X2-MM THK)	
	14	1	**155-0869**	1	BEARING AS-ROLLER	
	15	1	**155-0870**	1	BEARING AS-ROLLER	
	16	1	**179-3152**	2	NUT-SLOTTED	
	17	1	**155-0872**	1	RING	
	19	1	**155-0874**	1	CARRIER-PLANETARY	
	20	1	**155-0875**	4	GEAR-PLANETARY (32-TEETH)	
	21	1	**155-0876**	4	BEARING AS-ROLLER	
	22	1	**9X-0656**	4	RING	
	23	1	**8U-5005**	3	SHIM (1-MM THK)	
	24	1	**127-8987**	1	RING-RETAINING	
	25	1	**121-8088**	2	BALL BEARING	
	26	1	**155-0877**	1	GEAR-SUN (19-TEETH)	
B	27	1	**098-2982**	4	SHIM (1.5-MM THK)	
	28	1	**110-4737**	2	RING-RETAINING	
	29	2	**155-0878**	1	HOUSING-BRAKE	
	30	2	**155-0849**	1	ORIFICE	
M	31	2	**8T-4139**	4	BOLT (M12X1.75X30-MM)	
	32	2	**222-5793**	1	SEAL-O-RING	
	33	2	**155-0850**	1	PISTON	
	34	2	**155-0851**	1	SEAL-LIP TYPE	
	35	2	**155-0852**	1	SEAL-LIP TYPE	
	36	2	**179-3151**	1	SPRING	
	37	2	**179-3154**	1	SHIM (3.5-MM THK)	
B	38	2	**132-4268**	5	DISC-CLUTCH (1.7-MM THK)	
B	39	2	**132-4262**	6	DISC-CLUTCH (1.4-MM THK)	
B	40	2	**132-4263**	1	DISC-CLUTCH (1.2-MM THK)	
B	41	2	**132-4265**	1	DISC-CLUTCH (1.6-MM THK)	
B	42	2	**132-4266**	1	DISC-CLUTCH (1.8-MM THK)	
	43	2	**9X-6574**	1	RING-RETAINING	
	44	2	**155-0855**	1	SLEEVE	
	45	2	**8T-0707**	1	RING-RETAINING (INTERNAL)	
	46	2	**222-5792**	1	SEAL-O-RING	
	47	2	**197-6054**	1	WASHER (63.6X70X0.5-MM THK)	

152-7372 **DRIVE GP-SWING (**contd.**)** **i05972402**

NOTE	REF NO	GRAPHIC REF	PART NUMBER	QTY	PART NAME 1 2 3 4 5 6 (PRODUCT LEVEL)	SEE PAGE
B - USE AS REQUIRED M - METRIC PART						

152-7372 **DRIVE GP-SWING (**contd.**)** **i05972402**

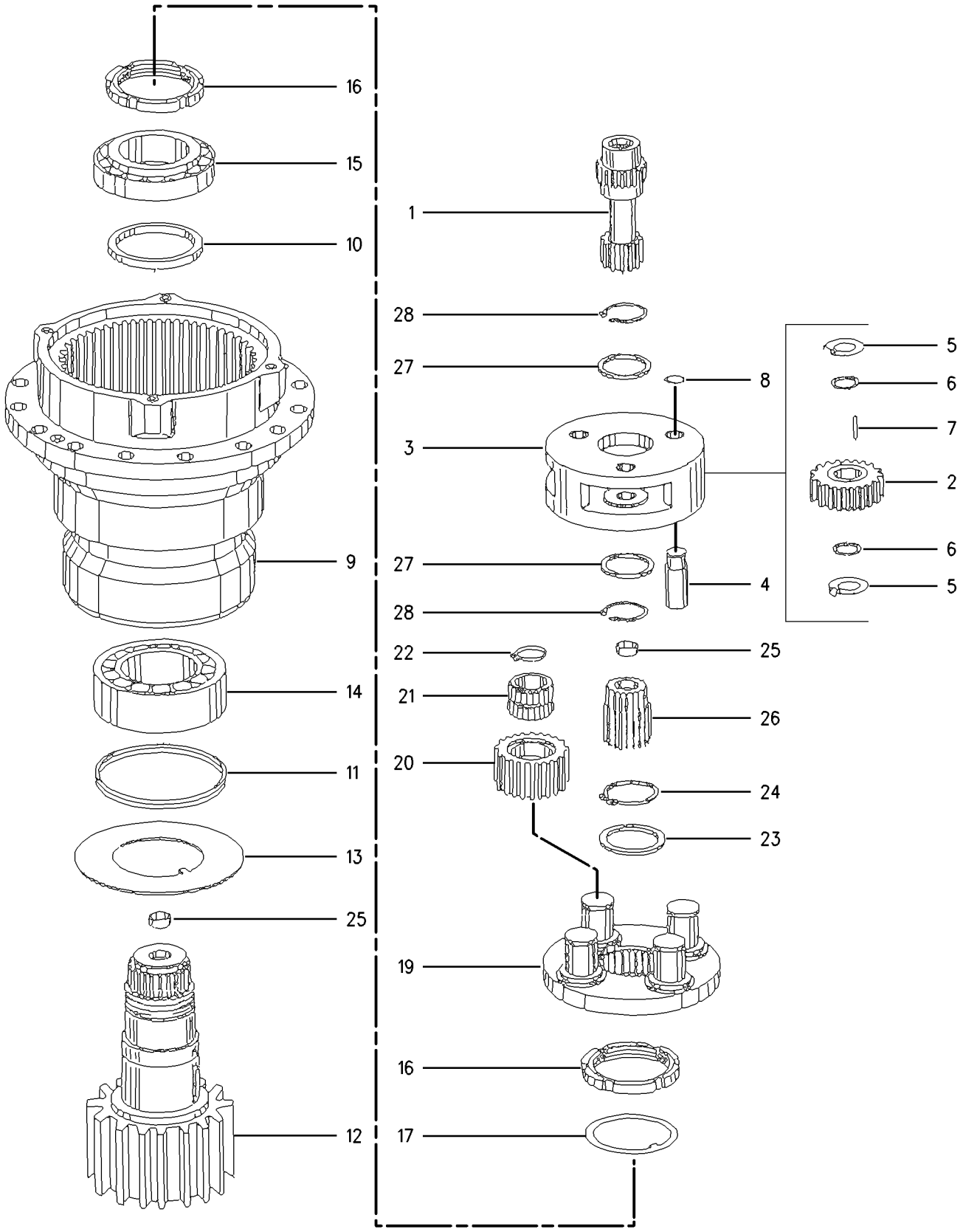

GRAPHIC #1 g00913548

152-7372 **DRIVE GP-SWING (**contd.**)** **i05972402**

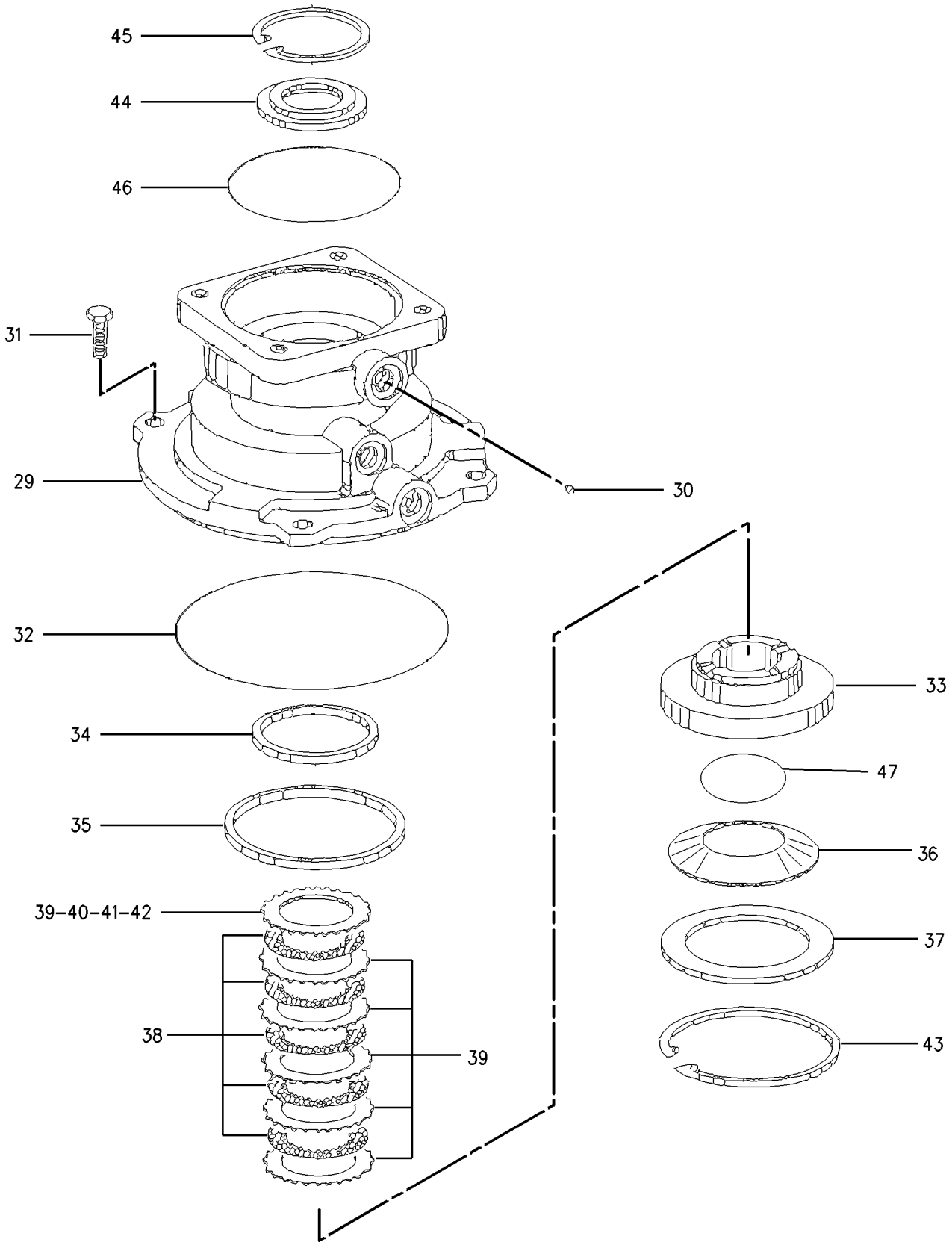

GRAPHIC #2 <END> g00781163

307-2787 FILTER & MTG GP-OIL—HYDRAULIC

S/N: CH91-UP

PART OF 264-8993 LINES GP-SWING MOTOR

ALSO AN ATTACHMENT

SMCS-5068 **i05969781**

NOTE	REF NO	GRAPHIC REF	PART NUMBER	QTY	PART NAME 1 2 3 4 5 6 (PRODUCT LEVEL)	SEE PAGE
Y	1	1	**109-7288**	1	FILTER GP-OIL	385
	2	1	**188-1813**	1	PLATE	
	3	1	*148-8318*	1	CONNECTOR AS	
		1	**3K-0360**	1	SEAL-O-RING	
		1	**6V-8397**	1	SEAL-O-RING	
		1	**6V-8634**	1	CONNECTOR	
	4	1	*148-8319*	1	CONNECTOR AS	
		1	**2M-9780**	1	SEAL-O-RING	
		1	**6V-8397**	1	SEAL-O-RING	
		1	**6V-8715**	1	CONNECTOR	
	5	1	*148-8367*	1	ELBOW AS	
		1	**6V-8397**	1	SEAL-O-RING	
		1	**6V-9850**	1	ELBOW	
M	6	1	**5C-7261**	2	NUT (M8X1.25-THD)	
	7	1	**8T-4224**	2	WASHER-HARD (8.8X16X2-MM THK)	
M	8	1	**8T-4908**	2	BOLT (M8X1.25X25-MM)	
M	9	1	**8T-4970**	4	BOLT (M6X1X14-MM)	

M - METRIC PART
Y - SEPARATE ILLUSTRATION

307-2787 **FILTER & MTG GP-OIL** (contd.) **i05969781**

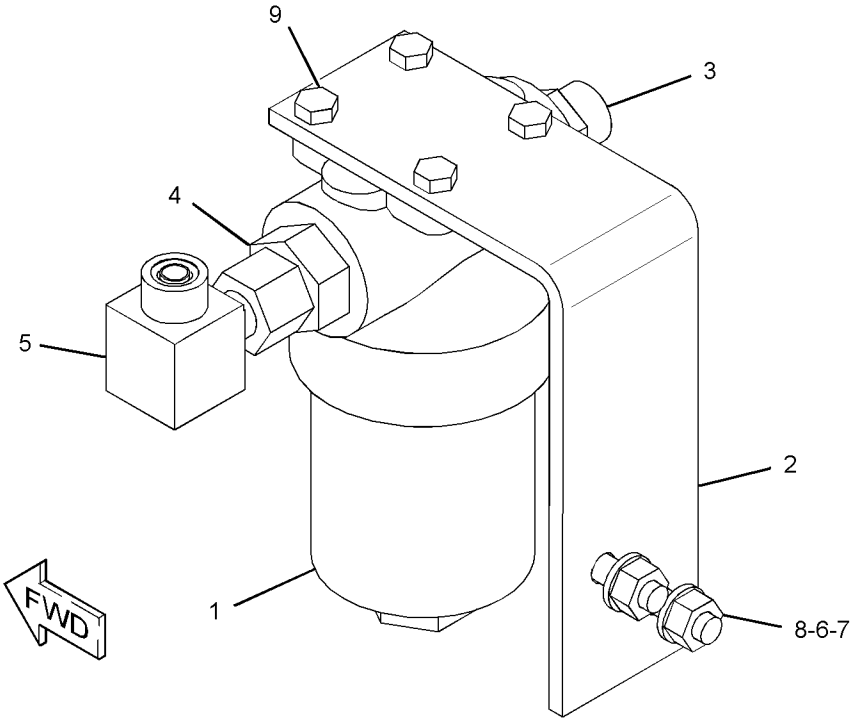

GRAPHIC #1 <END> g03039616

475-2052 FILTER & MTG GP-OIL

S/N: CH91-UP

PART OF 475-2051 LINES GP-SWING MOTOR

ALSO AN ATTACHMENT

SMCS-5068 **i06758729**

NOTE	REF NO	GRAPHIC REF	PART NUMBER	QTY	PART NAME 1 2 3 4 5 6 (PRODUCT LEVEL)	SEE PAGE
	1	1	**188-1813**	1	PLATE	
	2	1	**443-1362**	1	FILTER GP-OIL (HYDRAULIC)	
		1	**442-0109**	1	ELEMENT AS	
		1	**442-0110**	1	HOUSING GP-FILTER	
		1	**442-0111**	1	BASE-OIL FILTER	
		1	**452-0452**	1	PLATE-ADAPTER	
	3	1	*148-8318*	1	CONNECTOR AS	
		1	**3K-0360**	1	SEAL-O-RING	
		1	**6V-8397**	1	SEAL-O-RING	
		1	**6V-8634**	1	CONNECTOR	
	4	1	*148-8319*	1	CONNECTOR AS	
		1	**2M-9780**	1	SEAL-O-RING	
		1	**6V-8397**	1	SEAL-O-RING	
		1	**6V-8715**	1	CONNECTOR	
	5	1	*148-8367*	1	ELBOW AS	
		1	**6V-8397**	1	SEAL-O-RING	
		1	**6V-9850**	1	ELBOW	
M	6	1	**5C-7261**	2	NUT (M8X1.25-THD)	
	7	1	**8T-4224**	2	WASHER-HARD (8.8X16X2-MM THK)	
M	8	1	**8T-4908**	2	BOLT (M8X1.25X25-MM)	
M	9	1	**8T-4970**	4	BOLT (M6X1X14-MM)	

M - METRIC PART

475-2052 **FILTER & MTG GP-OIL** (contd.) **i06758729**

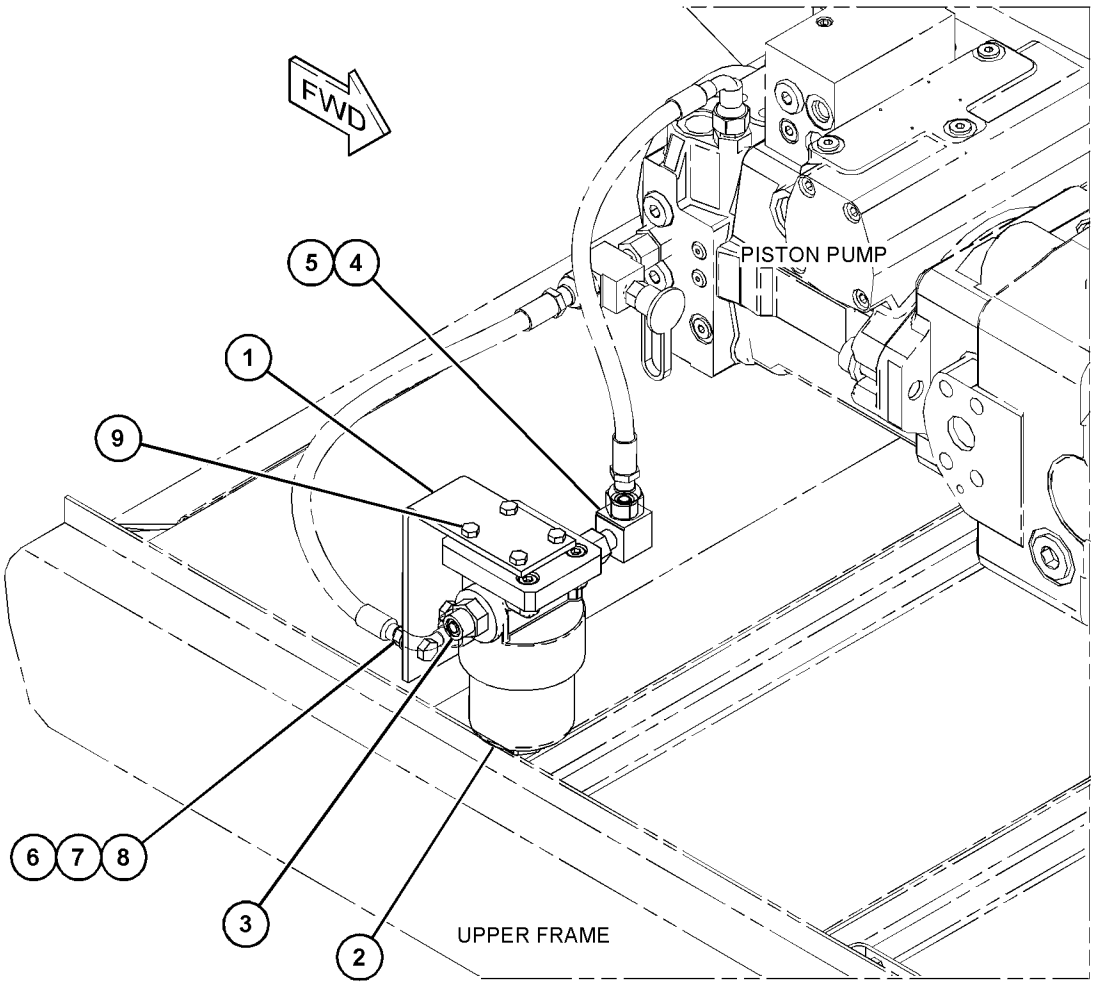

GRAPHIC #1 <END> g06122961

109-7288 FILTER GP-OIL—HYDRAULIC, SWING CIRCUIT

S/N: CH91-UP
PART OF 307-2787 FILTER & MTG GP-OIL
ALSO AN ATTACHMENT

SMCS-3004, 4295, 431F, 5068, 5091, 5092 **i05980337**

NOTE	REF NO	GRAPHIC REF	PART NUMBER	QTY	PART NAME 1 2 3 4 5 6 (PRODUCT LEVEL)	SEE PAGE
	1	1	**124-3598**	1	BASE-FILTER	
	2	1	**117-1495**	1	SEAL-O-RING	
	3	1	**117-0951**	1	HOUSING	
	4	1	**361-7480**	1	FILTER ELEMENT-OIL (ADVANCED EFFICIENCY) (SWING CIRCUIT)	

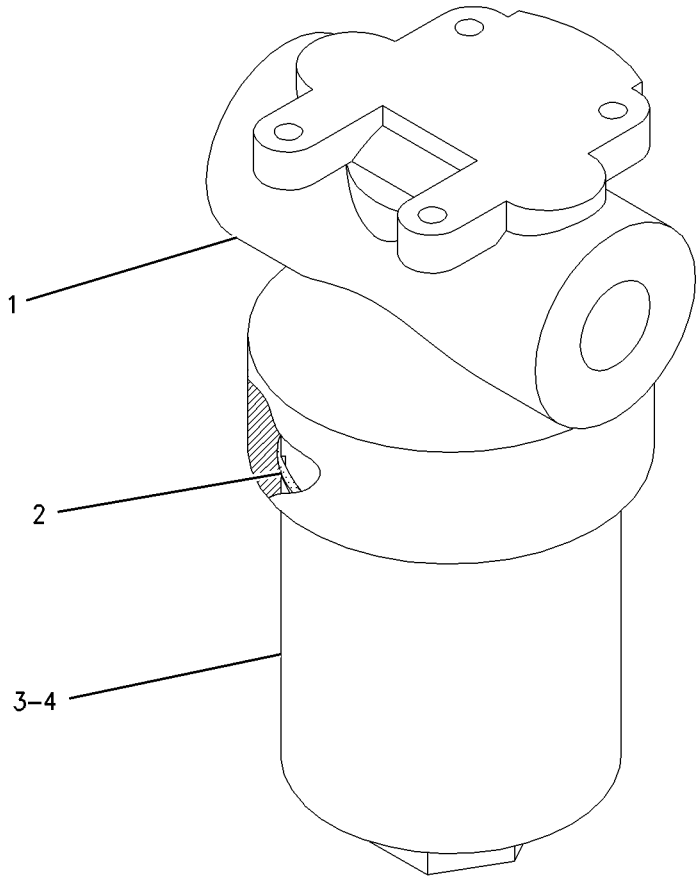

GRAPHIC #1 <END> g00911843

145-7750 FILTER GP-OIL

S/N: CH91-UP
HYDRAULIC, PILOT
PART OF 259-6559 LINES GP-HYDRAULIC
ALSO AN ATTACHMENT

SMCS-3004, 4295, 431F, 5068, 5091, 5092 **i05980338**

NOTE	REF NO	GRAPHIC REF	PART NUMBER	QTY	PART NAME 1 2 3 4 5 6 (PRODUCT LEVEL)	SEE PAGE
	1	1	**4J-0526**	1	SEAL-O-RING	
	2	1	**361-7480**	1	FILTER ELEMENT-OIL (ADVANCED EFFICIENCY) (HYDRAULIC, PILOT)	
	3	1	**149-6246**	1	HOUSING	

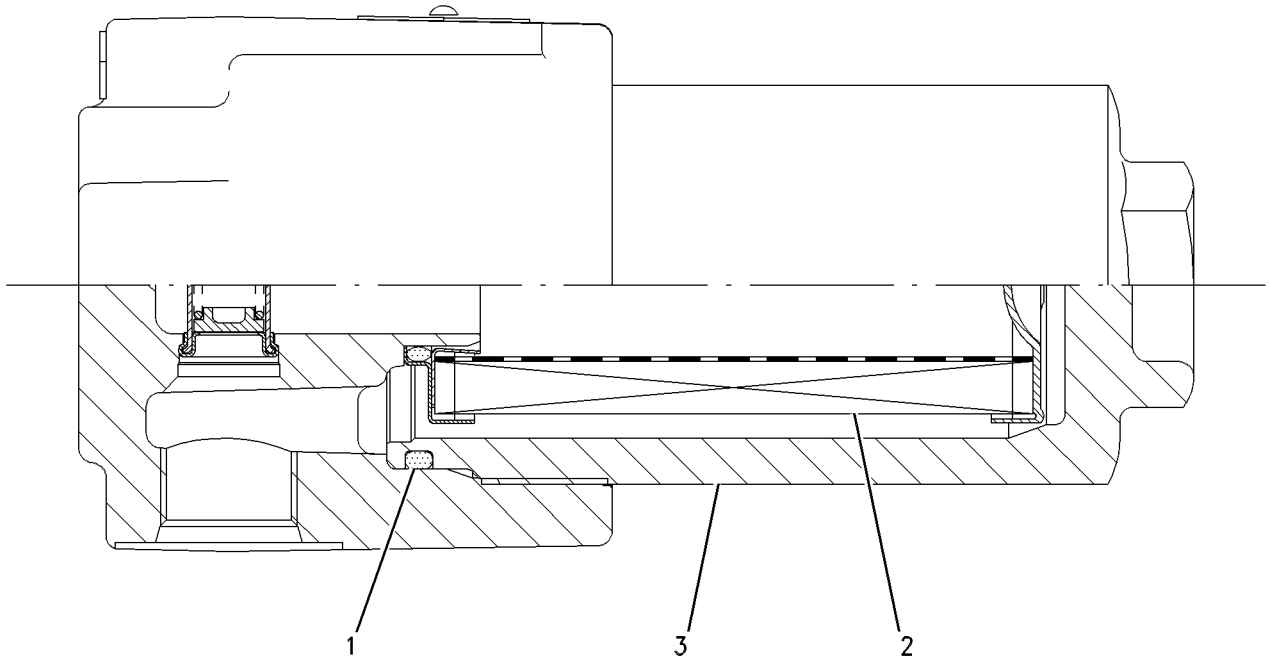

GRAPHIC #1 <END> g00277806

290-5479 FILTER GP-OIL—HYDRAULIC

S/N: CH91-UP
PART OF 321-8799 TANK GP-HYDRAULIC
ALSO AN ATTACHMENT

SMCS-3004, 4295, 431F, 5068, 5091, 5092 **i06015878**

NOTE	REF NO	GRAPHIC REF	PART NUMBER	QTY	PART NAME 1 2 3 4 5 6 (PRODUCT LEVEL)	SEE PAGE
	1	1	**198-9084**	1	COVER AS-FILTER	
	2	1	**198-9085**	1	HEAD AS	
M		1	**8U-5056**	4	STUD	
	3	1	**145-2513**	1	VALVE AS (FILTER BYPASS)	
	4	1	**290-5480**	1	TUBE AS-FILTER	
	5	1	**137-7249**	1	FILTER ELEMENT-OIL (ULTRA HIGH EFFICIENCY) (HYDRAULIC)	
	6	1	**145-6735**	2	SEAL-O-RING	
	7	1	**3S-1223**	1	SEAL-O-RING	
	8	1	**8U-1862**	4	LOCKWASHER	
M	9	1	**8T-4133**	4	NUT (M10X1.5-THD)	

M - METRIC PART

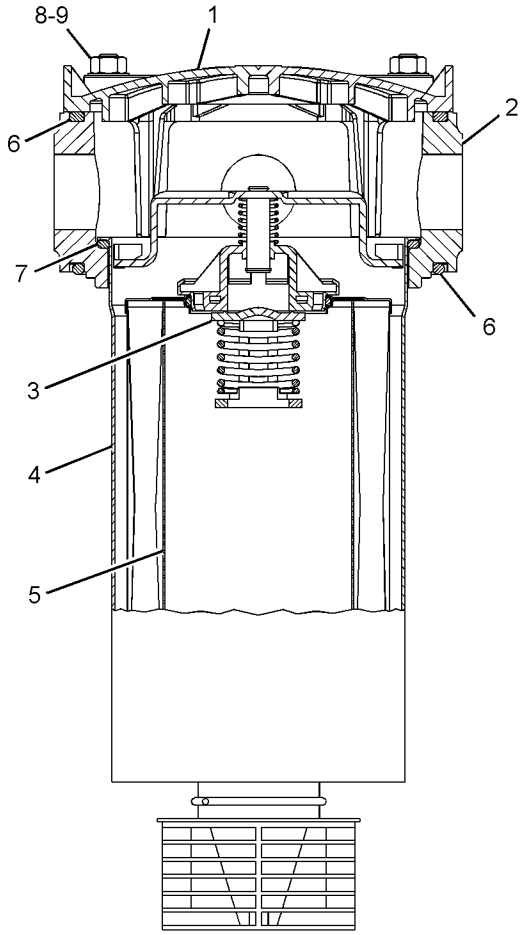

GRAPHIC #1 <END> g01330172

443-1358 FILTER GP-OIL

S/N: CH91-UP
PART OF 475-2049 TANK GP-HYDRAULIC
ALSO AN ATTACHMENT

SMCS-3004, 4295, 431F, 5068, 5091, 5092 **i06755205**

NOTE	REF NO	GRAPHIC REF	PART NUMBER	QTY	PART NAME 1 2 3 4 5 6 (PRODUCT LEVEL)	SEE PAGE
	1	1	**445-2651**	1	FILTER-ELEMENT	
	2	1	**452-6051**	1	BASE-OIL FILTER	
	3	1	**452-6052**	1	COVER-FILTER	
	4	1	**452-6053**	1	HOUSING AS-FILTER	
	5	1	**6V-5055**	1	SEAL-O-RING	
	6	1	**8T-4121**	4	WASHER-HARD (11X21X2.5-MM THK)	
	7	1	**109-7411**	2	SEAL-O-RING	
M	8	1	**344-5675**	4	NUT (M10X1.5-THD)	

M - METRIC PART

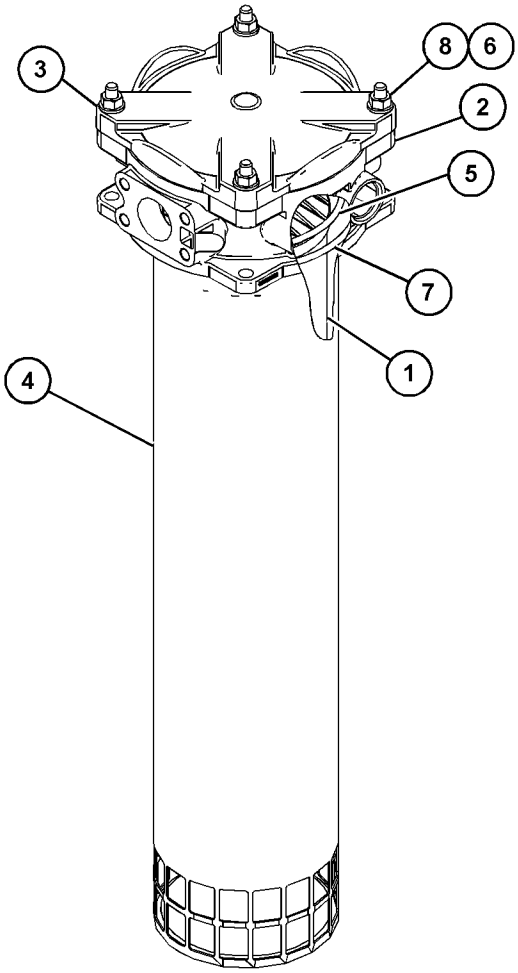

GRAPHIC #1 <END> g06111992

8U-0198 FILTER GP-OIL—HYDRAULIC

S/N: CH91-UP
PART OF 251-7950 LINES GP-RETURN
ALSO AN ATTACHMENT

SMCS-3004, 4295, 431F, 5068, 5091, 5092 **i05513049**

NOTE	REF NO	GRAPHIC REF	PART NUMBER	QTY	PART NAME 1 2 3 4 5 6 (PRODUCT LEVEL)	SEE PAGE
	1	1	**8U-0722**	1	HOLDER	
	2	1	**8U-0723**	1	FILTER ELEMENT-OIL (HYDRAULIC OIL RETURN)	
	3	1	**8U-0724**	1	SEAL-O-RING	

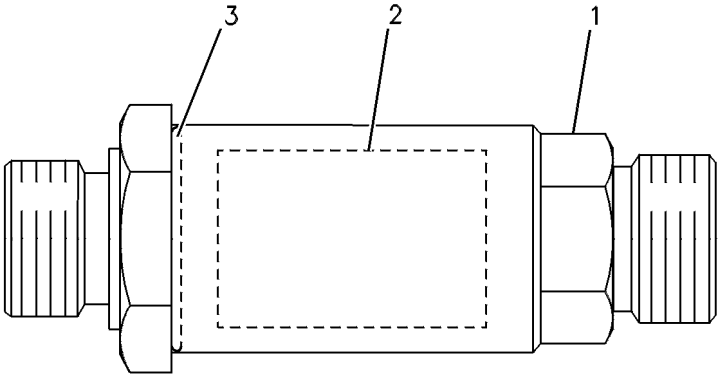

GRAPHIC #1 <END> g00244503

347-7715 FITTING GP-HYDRAULIC—QUICK DISCONNECT

S/N: CH91-UP

PART OF 392-3970 FITTING GP-HYDRAULIC

AN ATTACHMENT

SMCS-5057, 7553 **i05527691**

NOTE	REF NO	GRAPHIC REF	PART NUMBER	QTY	PART NAME 1 2 3 4 5 6 (PRODUCT LEVEL)	SEE PAGE
Y	1	1	**8U-0966**	1	FITTING GP-HYDRAULIC (QUICK DISCONNECT)	393
	2	1	**8U-0967**	1	CAP (PROTECTION)	

Y - SEPARATE ILLUSTRATION

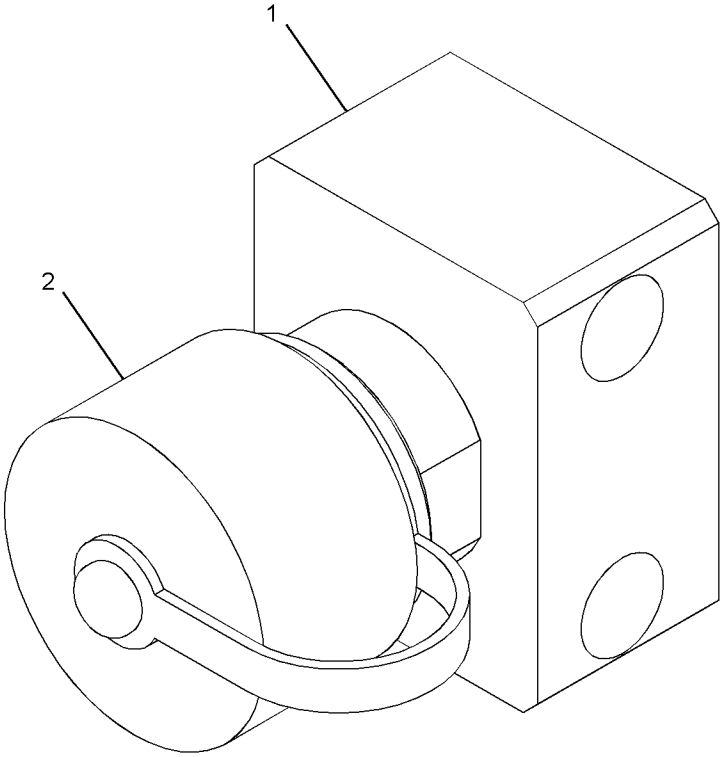

GRAPHIC #1 <END> g01979393

392-2938 FITTING GP-HYDRAULIC—GRAPPLE ROTATE

S/N: CH91-UP

AN ATTACHMENT

SMCS-5057, 7553 **i05525243**

NOTE	REF NO	GRAPHIC REF	PART NUMBER	QTY	PART NAME 1 2 3 4 5 6 (PRODUCT LEVEL)	SEE PAGE
	1	1	**114-9153**	4	CAP (FITTING)	
	2	1	**114-9155**	4	FITTING AS-HYDRAULIC (QUICK DISCONNECT, FEMALE)	
	3	1	**6V-8398**	4	SEAL-O-RING	

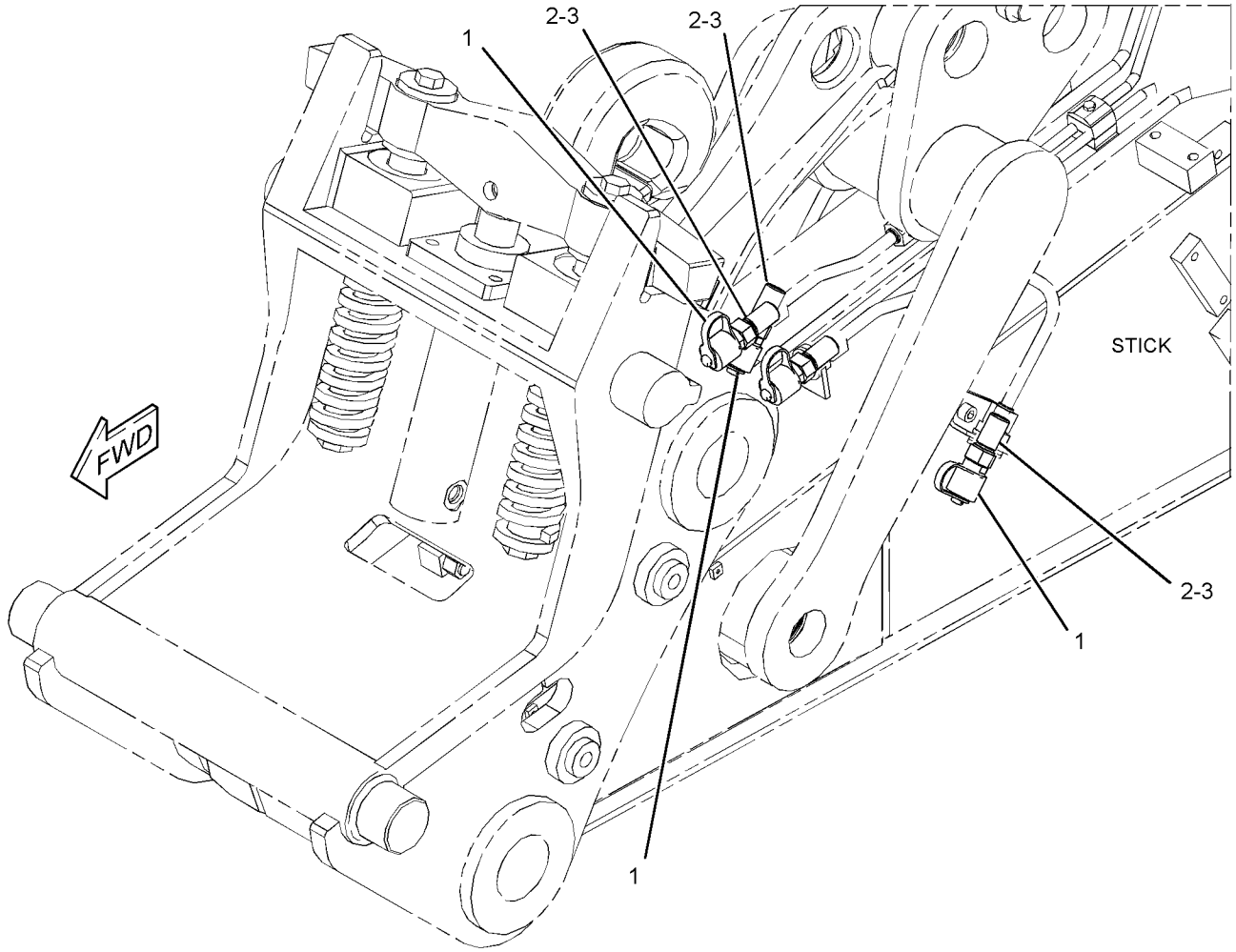

GRAPHIC #1 <END> g03335676

392-3970 FITTING GP-HYDRAULIC—QUICK DISCONNECT

S/N: CH91-UP

AN ATTACHMENT

SMCS-5057, 7553 **i05525268**

NOTE	REF NO	GRAPHIC REF	PART NUMBER	QTY	PART NAME 1 2 3 4 5 6 (PRODUCT LEVEL)	SEE PAGE
Y	1	1	**347-7715**	2	FITTING GP-HYDRAULIC (QUICK DISCONNECT)	390
M	2	1	**280-2747**	4	BOLT-SOCKET HEAD (M10X1.5X60-MM)	

M - METRIC PART
Y - SEPARATE ILLUSTRATION

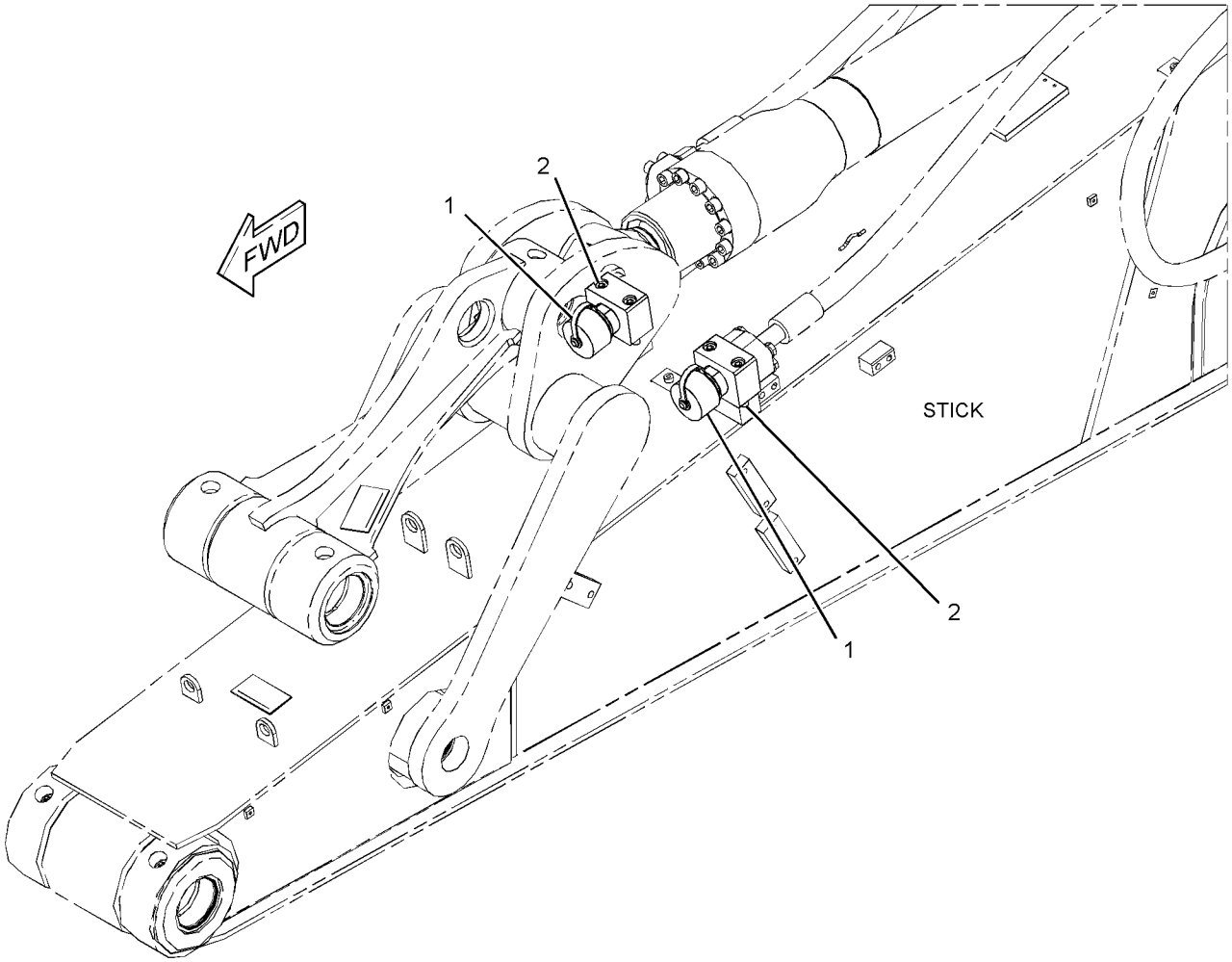

GRAPHIC #1 <END> g03335621

8U-0966 FITTING GP-HYDRAULIC—QUICK DISCONNECT

S/N: CH91-UP
PART OF 347-7715 FITTING GP-HYDRAULIC
AN ATTACHMENT

SMCS-5057, 7553 **i05530318**

NOTE	REF NO	GRAPHIC REF	PART NUMBER	QTY	PART NAME 1 2 3 4 5 6 (PRODUCT LEVEL)	SEE PAGE
	1	1	**5W-8017**	1	SEAL-O-RING	
	2	1	**8U-2743**	1	SEAL-O-RING	
	3	1	**8U-2744**	1	SEAL	

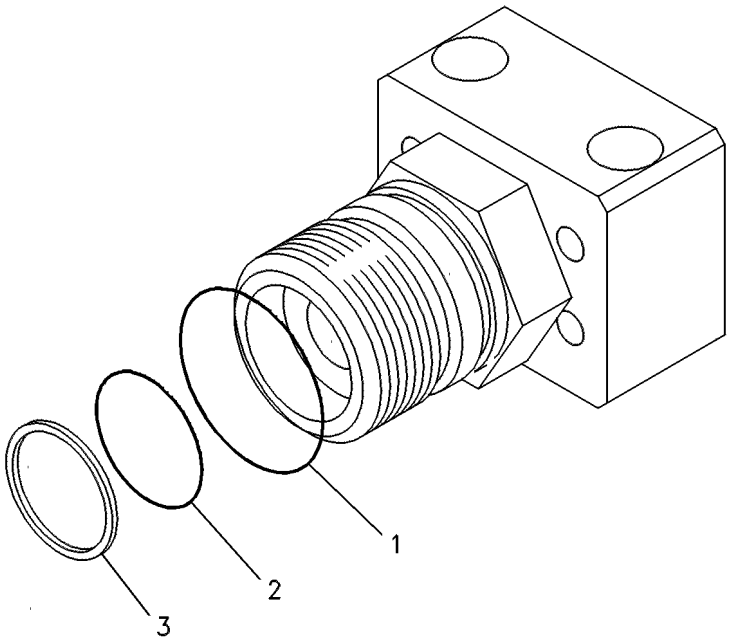

GRAPHIC #1 <END> g00244652

236-2428 GAUGE GP-SIGHT

S/N: CH91-UP
PART OF 321-8799, 475-2049 TANK GP-HYDRAULIC
ALSO AN ATTACHMENT

SMCS-7479 **i06134819**

NOTE	REF NO	GRAPHIC REF	PART NUMBER	QTY	PART NAME 1 2 3 4 5 6 (PRODUCT LEVEL)	SEE PAGE
	1	1	**236-5189**	4	SEAL-O-RING	
	2	1	**236-5193**	4	SEAL-O-RING	

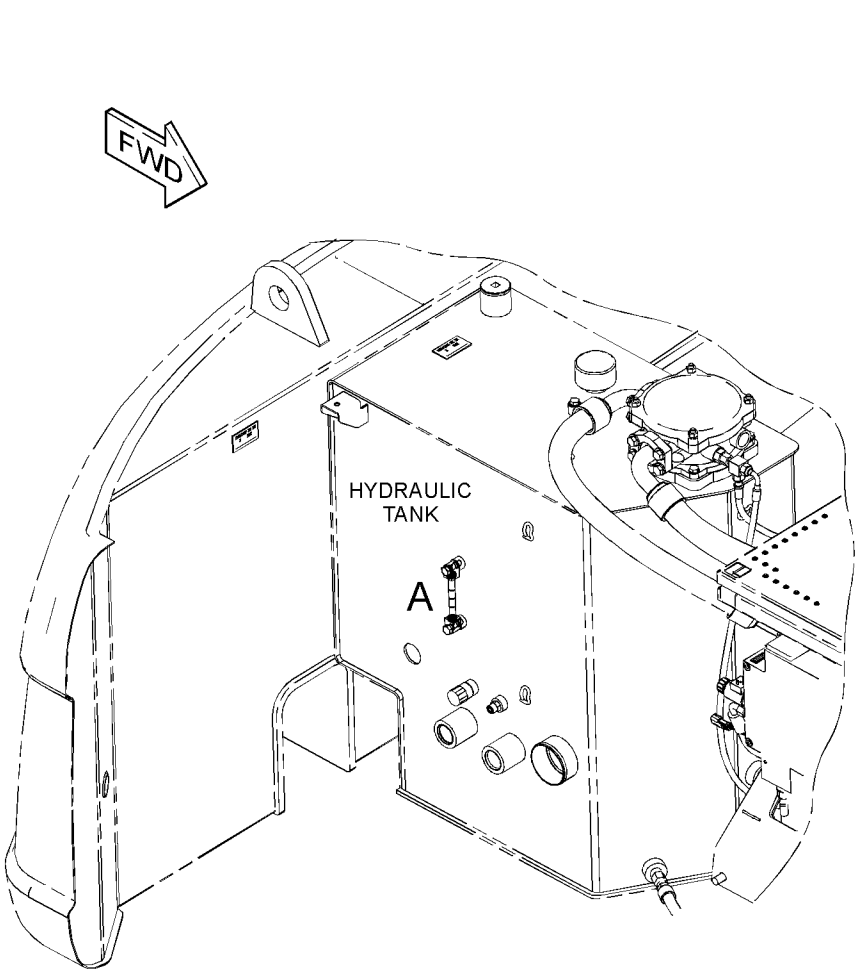

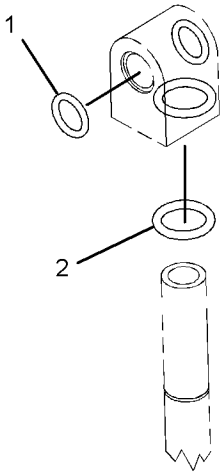

VIEW OF AREA A
(EXPLODED)

GRAPHIC #1 <END> g03826978

245-3661 HEAD GP-MOTOR

S/N: CH91-UP
PART OF 291-3711 MOTOR GP-PISTON
ALSO AN ATTACHMENT

SMCS-5058 **i05513204**

NOTE	REF NO	GRAPHIC REF	PART NUMBER	QTY	PART NAME 1 2 3 4 5 6 (PRODUCT LEVEL)	SEE PAGE
Y	1	1	**245-3664**	1	VALVE GP-MOTOR CONTROL (PRESSURE, FLOW COMPENSATOR)	681
Y	2	1	**245-3665**	1	VALVE GP-MOTOR CONTROL (TRAVEL)	683
	3	1	**245-3666**	1	HEAD	
	4	1	**124-9881**	1	PISTON	
	5	1	**124-9882**	1	TRUNNION	
	6	1	**135-7454**	1	PISTON	
	7	1	**124-9884**	1	PIN-THREADED	
	8	1	**242-8004**	2	GUIDE-VALVE	
	9	1	**123-5786**	2	VALVE	
	10	1	**123-5787**	2	SEAT	
M	11	1	**6V-8201**	8	BOLT-SOCKET HEAD (M16X2X45-MM)	
	12	1	**107-3116**	2	SEAL-O-RING	
	13	1	**9X-7680**	4	SEAL-O-RING	
	14	1	**033-6039**	2	SEAL-O-RING	
	15	1	**242-0262**	2	RING-BACKUP	
M	16	1	**125-2205**	1	BOLT-SHALLOW HEAD (M14X1.5X25-MM)	
	17	1	**135-7455**	3	SEAL	
	18	1	**7X-2906**	2	PIN	
	19	1	**120-4394**	1	PLUG-BREAK OFF	
	20	1	**123-2017**	1	PLUG-BREAK OFF	
	21	1	**123-5800**	2	PLUG AS	
	22	1	**190-8657**	2	VALVE GP-RELIEF (CROSSOVER, MAKEUP)	
					(EACH INCLUDES)	
		1	**217-0288**	1	CAP	
		1	**190-8718**	1	KIT-SEAL (RELIEF VALVE)	

M - METRIC PART
Y - SEPARATE ILLUSTRATION

245-3661 **HEAD GP-MOTOR** (contd.) **i05513204**

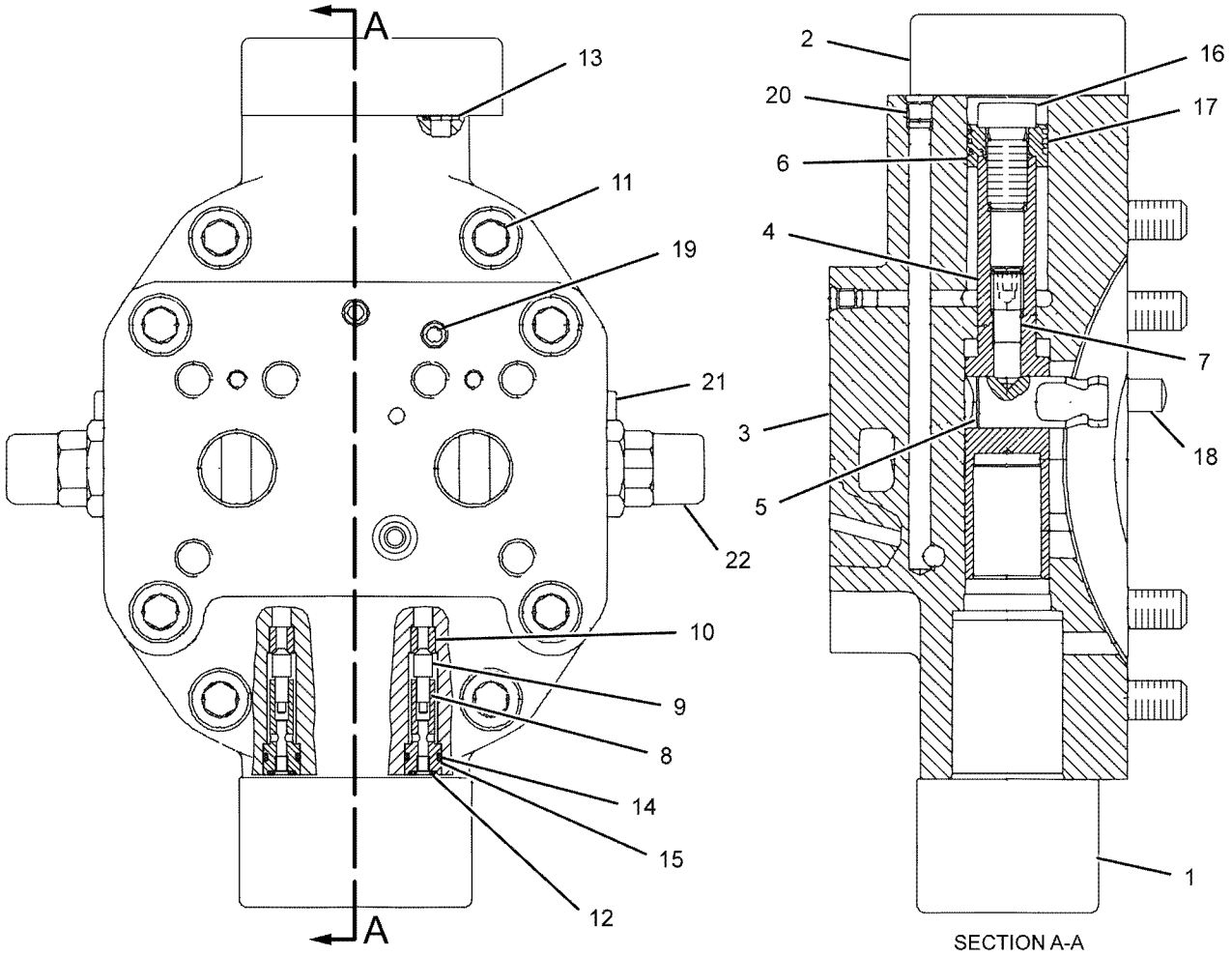

GRAPHIC #1 <END> g01048622

145-3543 HEAD GP-PUMP

S/N: CH91-UP
PART OF 190-8199 PUMP GP-PISTON
ALSO AN ATTACHMENT

SMCS-3222, 5070, 5086 **i05970834**

NOTE	REF NO	GRAPHIC REF	PART NUMBER	QTY	PART NAME 1 2 3 4 5 6 (PRODUCT LEVEL)	SEE PAGE
Y	1	1	**117-7275**	2	VALVE GP-RELIEF (CROSSOVER)	695
Y	2	1	**212-6679**	1	VALVE GP-RELIEF (PUMP CONTROL)	700
Y	3	1	**117-7276**	1	VALVE GP-RELIEF (STEERING HIGH PRESSURE CUTOFF)	696
J	4	1	**117-7278**	1	BUSHING	
	5	1	**117-7279**	1	BUSHING (EXTERNAL)	
	6	1	**117-7280**	1	BUSHING (INTERNAL)	
	7	1	**5E-6955**	4	BOLT	
	8	1	**5W-1250**	2	PIN	
	9	1	**117-7282**	1	SEAL-O-RING	
J	10	1	**087-4772**	3	PLUG-O-RING	
J	11	1	**6V-8397**	2	SEAL-O-RING	
J	12	1	**112-4628**	2	SCREW (7/16-20X0.5-IN)	
	13	1	**120-4394**	3	PLUG-BREAK OFF	
J	14	1	**123-2017**	1	PLUG-BREAK OFF	
	15	1	**177-6854**	1	PLUG-PIN	
					AVAILABLE REPAIR KIT(S):	
J			**443-7071**	1	KIT-SEAL	

J - KIT MARKED J SERVICES PART(S) MARKED J
Y - SEPARATE ILLUSTRATION

145-3543 **HEAD GP-PUMP** (contd.) **i05970834**

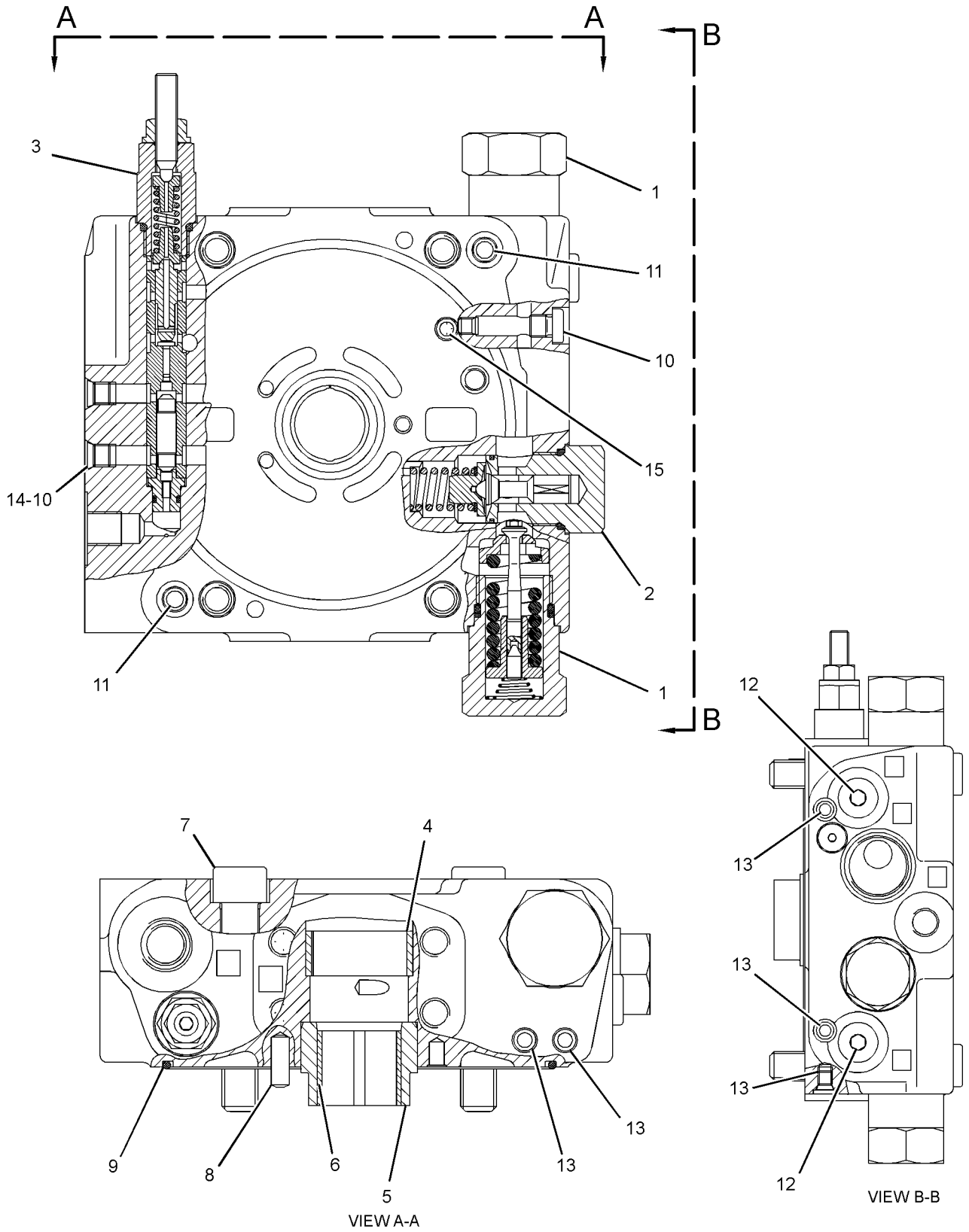

GRAPHIC #1 <END> g02417716

253-6010 HEAD GP-PUMP

S/N: CH91-UP

PART OF 432-8567 PUMP GP-MAIN HYDRAULIC

ALSO AN ATTACHMENT

SMCS-3222, 5070, 5086 **i05519830**

NOTE	REF NO	GRAPHIC REF	PART NUMBER	QTY	PART NAME 1 2 3 4 5 6 (PRODUCT LEVEL)	SEE PAGE
	1	1	**6E-1580**	1	BEARING	
	2	1	**8T-7942**	2	DOWEL	
	3	1	**8T-6628**	1	DOWEL	
J	4	1	**321-5628**	1	SEAL-O-RING	
J	5	1	**259-0891**	3	SEAL-RING	
J	6	1	**9S-8004**	1	PLUG (9/16-18-THD)	
J	7	1	**087-4772**	2	PLUG-O-RING	
	8	1	**144-9102**	1	ORIFICE	
	9	1	**239-5723**	1	ORIFICE	
	10	1	**3J-1907**	1	SEAL-O-RING	
					AVAILABLE REPAIR KIT(S):	
J			**443-2196**	1	KIT-SEAL	

J - KIT MARKED J SERVICES PART(S) MARKED J

253-6010 **HEAD GP-PUMP** (contd.) **i05519830**

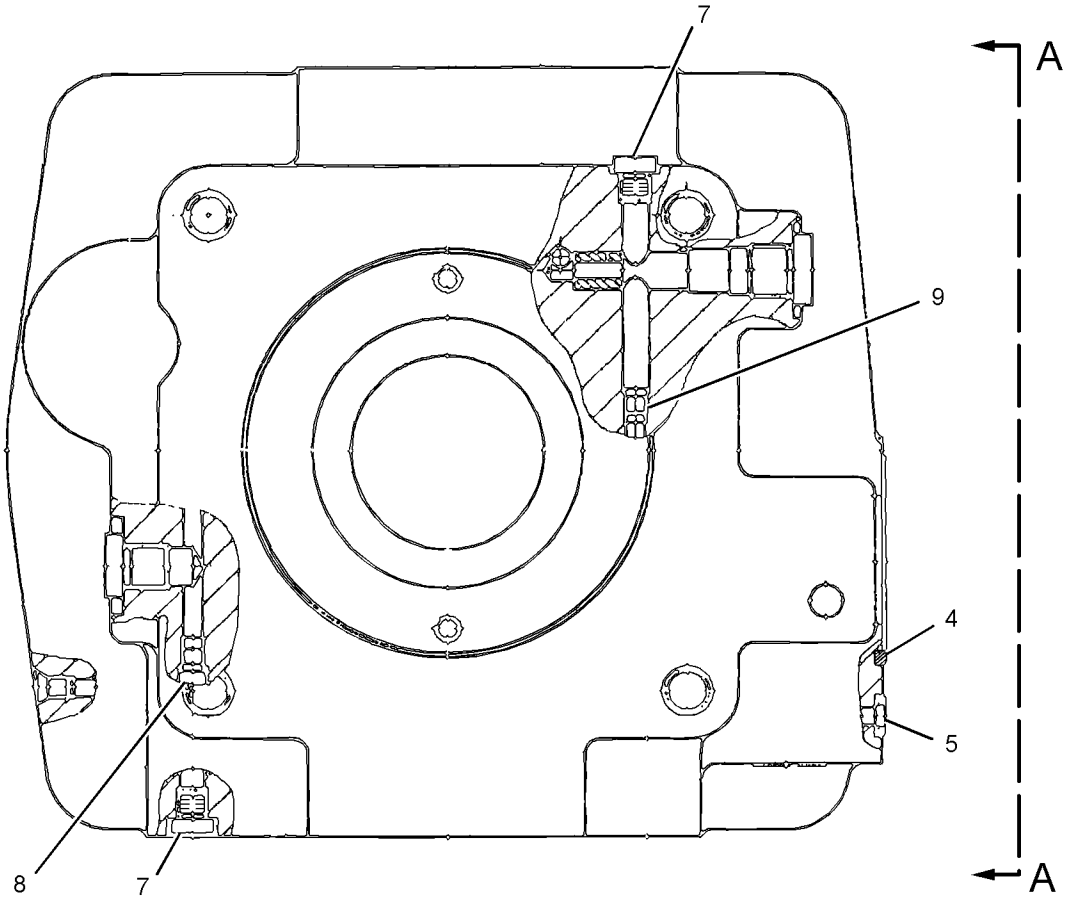

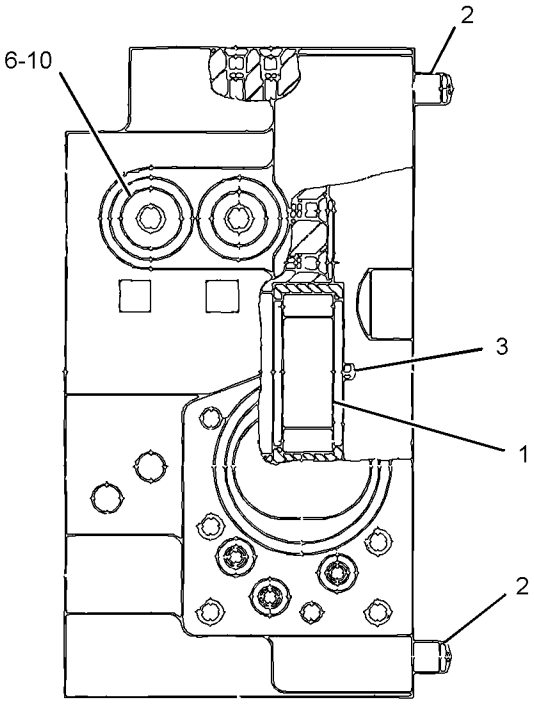

VIEW A-A

GRAPHIC #1 <END> g01887854

417-9967 HYDRAULIC AR

S/N: CH91-UP
AN ATTACHMENT

SMCS-5050 **i06822933**

NOTE	PART NUMBER	QTY	PART NAME 1 2 3 4 5 6 (PRODUCT LEVEL)	SEE PAGE
Y	*252-6687*	1	CONTROL AR-HANDLE (JOYSTICK, 3-FUNCTION)	820
			—OR—	
Y	*499-0217*	1	CONTROL GP-JOYSTICK (JOYSTICK, 3-FUNCTION)	835
Y	*299-9227*	1	LINES GP-PILOT (RETURN OIL)	522
Y - SEPARATE ILLUSTRATION				

<END>

420-9020 HYDRAULIC AR—MULTIFUNCTION CONTROL VALVE

S/N: CH91-UP
MEDIUM PRESSURE
AN ATTACHMENT

SMCS-5050 **i06792669**

NOTE	PART NUMBER	QTY	PART NAME 1 2 3 4 5 6 (PRODUCT LEVEL)	SEE PAGE
Y	*252-6689*	1	CONTROL AR-HANDLE (JOYSTICK WITH SLIDE CONTROL)	820
			—OR—	
Y	*499-0216*	1	CONTROL GP-JOYSTICK (HYDRAULIC)	834
Y	*419-5484*	1	VALVE & LINES AR-AUXILIARY (MULTIFUNCTION COMBINED VALVE)	625
Y	*251-7942*	1	VALVE & LINES GP-AUXILIARY (MEDIUM PRESSURE FUNCTION)	628
Y - SEPARATE ILLUSTRATION				

<END>

445-2355 HYDRAULIC AR—HAMMER

S/N: CH91-UP
PART OF 453-8185, 473-2841, 517-3262 DISTRIBUTION AR
AN ATTACHMENT

SMCS-5050 **i06835551**

NOTE	PART NUMBER	QTY	PART NAME 1 2 3 4 5 6 (PRODUCT LEVEL)	SEE PAGE
Y	*251-7932*	1	VALVE & LINES AR-AUXILIARY (HAMMER)	623
Y	*299-9227*	1	LINES GP-PILOT (RETURN OIL)	522
Y	*252-6688*	1	CONTROL AR-HANDLE (JOYSTICK)	820
			—OR—	
Y	*499-0214*	1	CONTROL GP-JOYSTICK	833
Y - SEPARATE ILLUSTRATION				

<END>

449-2784 HYDRAULIC AR—UPPER

S/N: CH91-UP
PART OF 449-2823 COMMON AR
ALSO AN ATTACHMENT

SMCS-5050 **i06758645**

NOTE	PART NUMBER	QTY	PART NAME 1 2 3 4 5 6 (PRODUCT LEVEL)	SEE PAGE
Y	*188-7607*	1	LINES GP-HYDRAULIC (2-CIRCUIT)	476
Y	*259-6559*	1	LINES GP-HYDRAULIC (PLATFORM)	478
			—OR—	
Y	*475-2050*	1	LINES GP-HYDRAULIC (PLATFORM)	488
Y	*254-0470*	1	LINES GP-PILOT (PLATFORM, TRAVEL)	513
Y	*254-0477*	1	LINES GP-PILOT (OPERATOR STATION)	515
Y	*254-2663*	1	LINES GP-PILOT (PLATFORM, BRAKE)	517
Y	*461-6000*	1	LINES GP-PILOT (UPPER)	523
Y	*254-0485*	1	LINES GP-PRESSURE TEST	525
Y	*264-8996*	1	LINES GP-PUMP	526
Y	*251-7950*	1	LINES GP-RETURN	528
			—OR—	
Y	*475-2053*	1	LINES GP-RETURN	531
Y	*254-2631*	1	LINES GP-STEERING	547
Y	*264-8993*	1	LINES GP-SWING MOTOR	578
			—OR—	
Y	*475-2051*	1	LINES GP-SWING MOTOR	580
Y	*283-3190*	1	PUMP & MTG GP-GEAR (FAN DRIVE)	591
Y	*186-0499*	1	PUMP & MTG GP-PILOT (BRAKE, STEERING)	593
Y	*251-7947*	1	VALVE & LINES GP-HEAVY LIFT	648
Y	*251-7934*	1	VALVE & LINES GP-TRAVEL CONT (FAST TRAVEL)	649
Y	*393-1539*	1	VALVE & MTG GP-MAIN CONTROL	651

Y - SEPARATE ILLUSTRATION

<END>

457-4857 HYDRAULIC AR—MEDIUM PRESSURE FUNCTION

S/N: CH91-UP
AN ATTACHMENT

SMCS-5050 **i06835571**

NOTE	PART NUMBER	QTY	PART NAME 1 2 3 4 5 6 (PRODUCT LEVEL)	SEE PAGE
Y	*252-6688*	1	CONTROL AR-HANDLE (JOYSTICK)	820
			—OR—	
Y	*495-6043*	1	CONTROL GP-JOYSTICK	832
Y	*251-7942*	1	VALVE & LINES GP-AUXILIARY	628

Y - SEPARATE ILLUSTRATION

<END>

354-7286 HYDRAULIC AR-LOWER

S/N: CH91-UP
PART OF 449-2823 COMMON AR
ALSO AN ATTACHMENT

SMCS-5050 **i05934386**

NOTE	PART NUMBER	QTY	PART NAME 1 2 3 4 5 6 (PRODUCT LEVEL)	SEE PAGE
Y	*111-1897*	1	CYLINDER & MTG GP-AXLE LOCK	342
Y	*254-2692*	1	LINES GP-GREASE (OSCILLATING AXLE PIN)	303
Y	*340-0267*	1	LINES GP-HYDRAULIC (2 CIRCUITS)	482
Y	*340-0275*	1	LINES GP-HYDRAULIC (4 CIRCUITS)	485
Y	*111-1896*	1	SWIVEL & MOUNTING GP	608

Y - SEPARATE ILLUSTRATION

<END>

417-9326 LINES GP-AUXILIARY HYDRAULIC—1-PIECE BOOM, MEDIUM PRESSURE

S/N: CH91-UP

AN ATTACHMENT

SMCS-5057 **i05921113**

NOTE	REF NO	GRAPHIC REF	PART NUMBER	QTY	PART NAME 1 2 3 4 5 6 (PRODUCT LEVEL)	SEE PAGE
	1	1	**114-9324**	4	CLAMP-SINGLE	
	2	1	**114-9325**	10	CLAMP-DOUBLE	
	3	1	**179-9316**	2	PLATE AS	
	4	1	**188-1792**	1	TUBE AS	
	5	1	**188-1793**	1	TUBE AS	
	6	1	**188-1794**	1	TUBE AS	
	7	1	**188-1795**	1	TUBE AS	
	8	1	*194-9387*	1	CLAMP AS (LOG)	
		1	**194-9386**	2	CLAMP	
		1	**197-5319**	1	PLATE	
	9	1	**195-7685**	10	ADAPTER	
M	10	1	**101-7401**	4	BOLT-SOCKET HEAD (M10X1.5X20-MM)	
	11	1	**6V-8398**	6	SEAL-O-RING	
M	12	1	**7X-2533**	2	BOLT (M6X1X35-MM)	
I	13	1	**266-9590**	2	HOSE AS	

I - REFER TO HYDRAULIC INFORMATION SYSTEM
M - METRIC PART

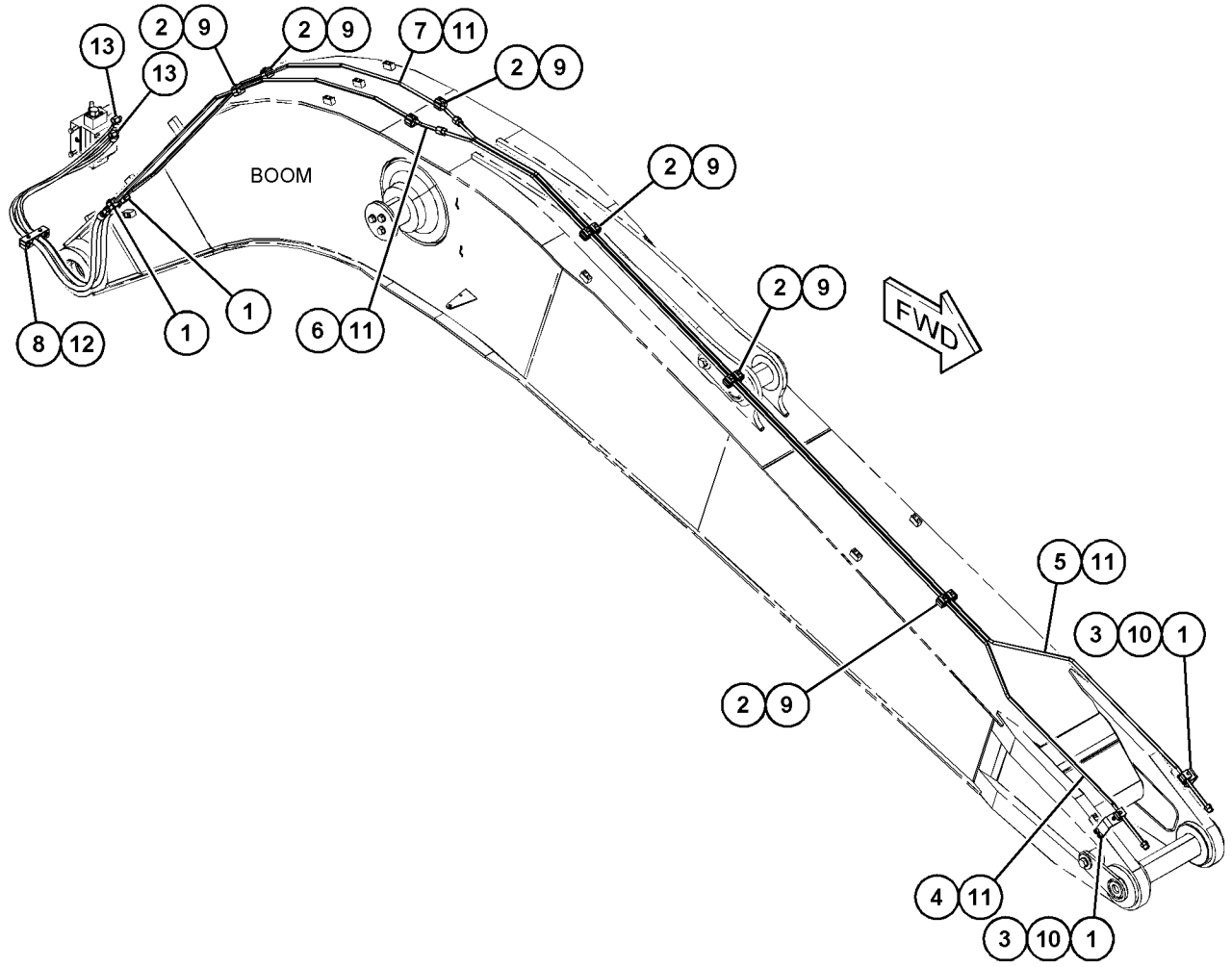

GRAPHIC #1 <END> g03571657

417-9328 LINES GP-AUXILIARY HYDRAULIC—1-PIECE BOOM, QUICK COUPLER

S/N: CH91-UP

AN ATTACHMENT

SMCS-5057 **i05921121**

NOTE	REF NO	GRAPHIC REF	PART NUMBER	QTY	PART NAME 1 2 3 4 5 6 (PRODUCT LEVEL)	SEE PAGE
	1	1	**114-9324**	4	CLAMP-SINGLE	
	2	1	**114-9325**	10	CLAMP-DOUBLE	
	3	1	**179-9316**	2	PLATE AS	
	4	1	**188-1798**	1	TUBE AS	
	5	1	**188-1799**	1	TUBE AS	
	6	1	**188-1800**	1	TUBE AS	
	7	1	**188-1801**	1	TUBE AS	
	8	1	*194-9387*	1	CLAMP AS (LOG)	
		1	**194-9386**	2	CLAMP	
		1	**197-5319**	1	PLATE	
	9	1	**195-7685**	10	ADAPTER	
I	10	1	**202-7570**	1	HOSE AS	
I	11	1	**260-7390**	1	HOSE AS	
M	12	1	**101-7401**	4	BOLT-SOCKET HEAD (M10X1.5X20-MM)	
	13	1	**6V-8397**	4	SEAL-O-RING	
	14	1	**6V-8398**	2	SEAL-O-RING	
M	15	1	**7X-2533**	2	BOLT (M6X1X35-MM)	

I - REFER TO HYDRAULIC INFORMATION SYSTEM
M - METRIC PART

417-9328 **LINES GP-AUXILIARY HYDRAULIC** (contd.) **i05921121**

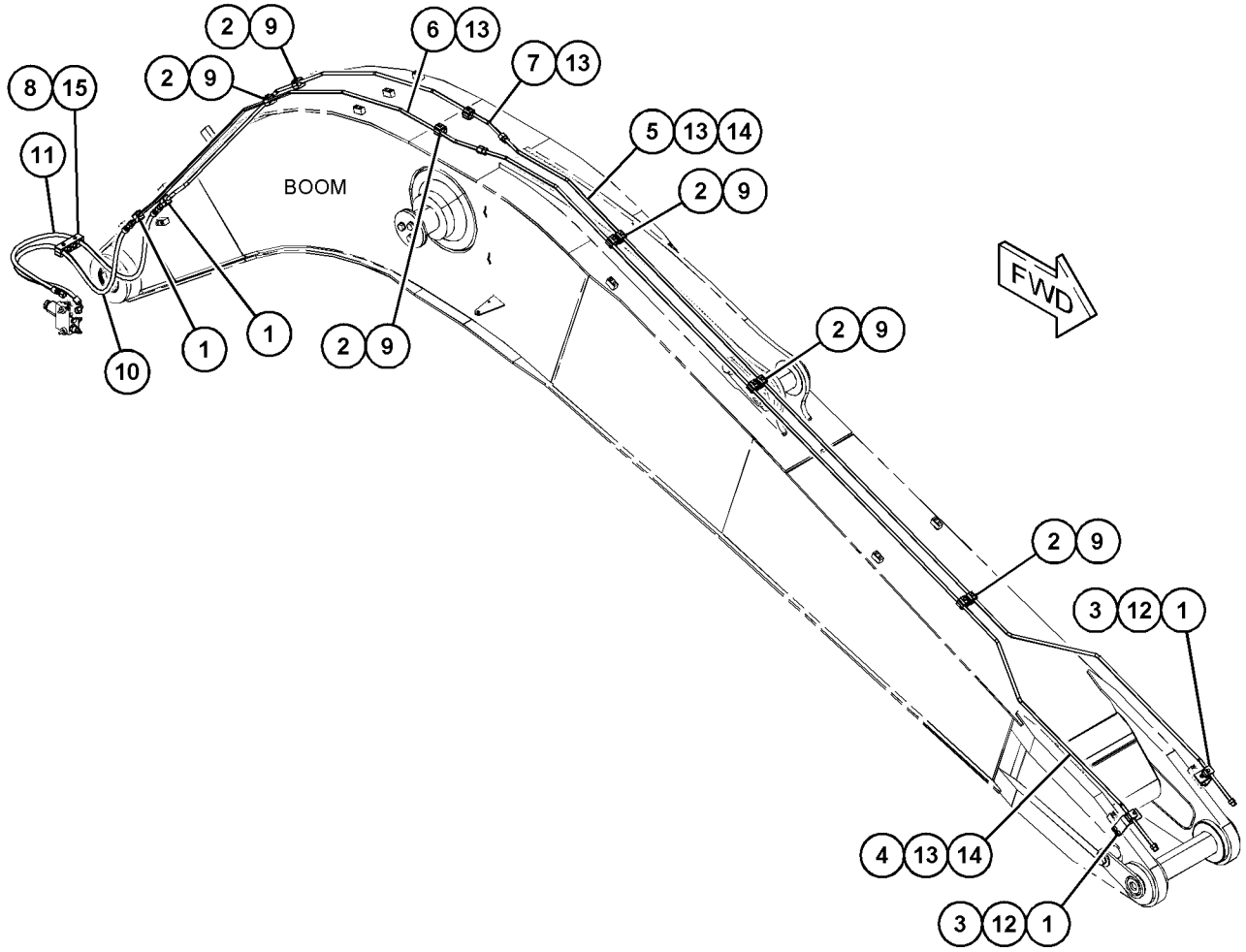

GRAPHIC #1 <END> g03571576

417-9331 LINES GP-AUXILIARY HYDRAULIC—1-PIECE, MED PRESSURE, QCPLR

S/N: CH91-UP

AN ATTACHMENT

SMCS-5057 **i05921141**

NOTE	REF NO	GRAPHIC REF	PART NUMBER	QTY	PART NAME 1 2 3 4 5 6 (PRODUCT LEVEL)	SEE PAGE
	1	1	**114-9324**	8	CLAMP-SINGLE	
	2	1	**114-9325**	10	CLAMP-DOUBLE	
	3	1	**179-9316**	2	PLATE AS	
	4	1	**188-1792**	1	TUBE AS	
	5	1	**188-1793**	1	TUBE AS	
	6	1	**188-1794**	1	TUBE AS	
	7	1	**188-1795**	1	TUBE AS	
	8	1	**188-1798**	1	TUBE AS	
	9	1	**188-1799**	1	TUBE AS	
	10	1	**188-1800**	1	TUBE AS	
	11	1	**188-1801**	1	TUBE AS	
	12	1	*194-9387*	1	CLAMP AS (LOG)	
		1	**194-9386**	2	CLAMP	
		1	**197-5319**	1	PLATE	
I	13	1	**202-7570**	1	HOSE AS	
I	14	1	**260-7390**	1	HOSE AS	
M	15	1	**101-7401**	4	BOLT-SOCKET HEAD (M10X1.5X20-MM)	
	16	1	**6V-8397**	4	SEAL-O-RING	
	17	1	**6V-8398**	8	SEAL-O-RING	
M	18	1	**7X-2533**	2	BOLT (M6X1X35-MM)	
I	19	1	**266-9590**	2	HOSE AS	

I - REFER TO HYDRAULIC INFORMATION SYSTEM
M - METRIC PART

417-9331 **LINES GP-AUXILIARY HYDRAULIC (**contd.**)** **i05921141**

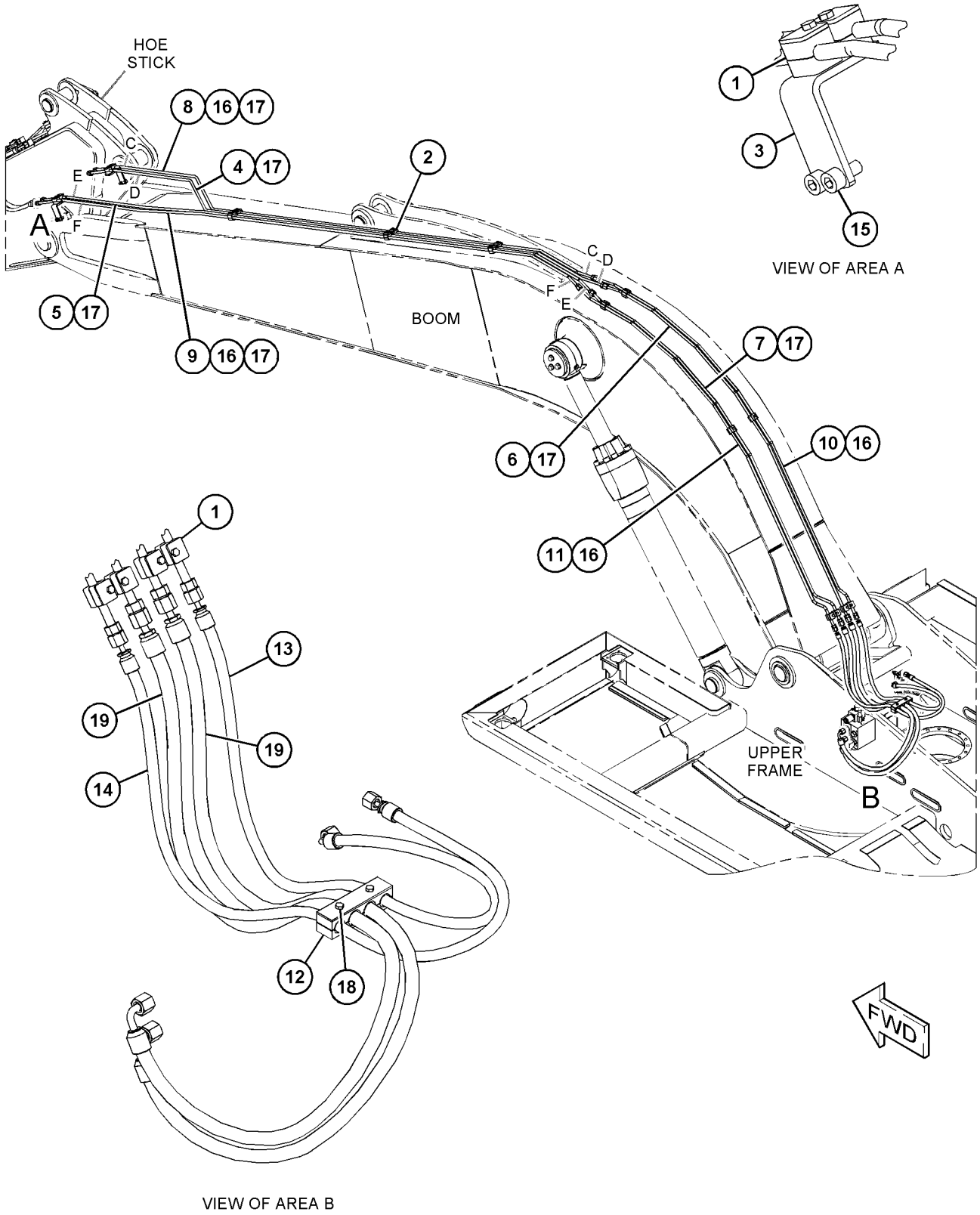

GRAPHIC #1 <END> g03575478

417-9916 LINES GP-AUXILIARY HYDRAULIC—VA BOOM, MEDIUM PRESSURE

S/N: CH91-UP
AN ATTACHMENT

SMCS-5057 **i06017455**

NOTE	REF NO	GRAPHIC REF	PART NUMBER	QTY	PART NAME 1 2 3 4 5 6 (PRODUCT LEVEL)	SEE PAGE
	1	1	**114-9324**	2	CLAMP-SINGLE	
	2	1	**114-9325**	6	CLAMP-DOUBLE	
	3	1	**179-9316**	2	PLATE AS	
	4	1	**185-6824**	1	TUBE AS	
	5	1	**185-6825**	1	TUBE AS	
	6	1	**187-5080**	1	PLATE AS	
	7	1	*194-9387*	6	CLAMP AS (LOG)	
					(EACH INCLUDES)	
		1	**194-9386**	2	CLAMP	
		1	**197-5319**	1	PLATE	
	8	1	**195-7685**	6	ADAPTER	
M	9	1	**101-7401**	4	BOLT-SOCKET HEAD (M10X1.5X20-MM)	
	10	1	**6V-8398**	4	SEAL-O-RING	
M	11	1	**7X-2533**	12	BOLT (M6X1X35-MM)	
I	12	1	**266-9581**	2	HOSE AS	

I - REFER TO HYDRAULIC INFORMATION SYSTEM
M - METRIC PART

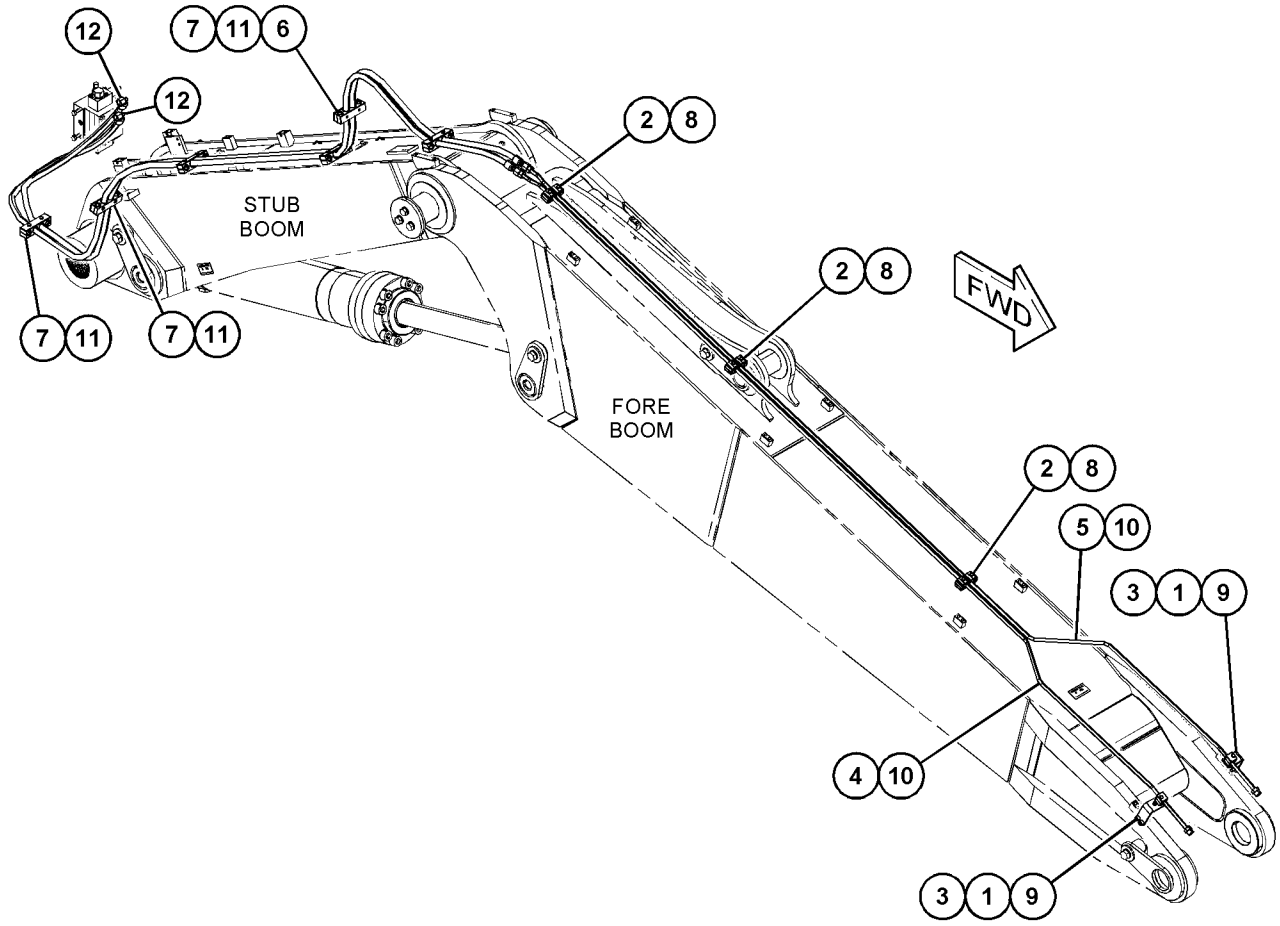

GRAPHIC #1 <END> g03571739

417-9917 LINES GP-AUXILIARY HYDRAULIC—VARIABLE ADJ, QUICK COUPLER

S/N: CH91-UP

AN ATTACHMENT

SMCS-5057 **i05921155**

NOTE	REF NO	GRAPHIC REF	PART NUMBER	QTY	PART NAME 1 2 3 4 5 6 (PRODUCT LEVEL)	SEE PAGE
	1	1	**114-9324**	2	CLAMP-SINGLE	
	2	1	**114-9325**	6	CLAMP-DOUBLE	
	3	1	**179-9316**	2	PLATE AS	
	4	1	**185-6826**	1	TUBE AS	
	5	1	**185-6827**	1	TUBE AS	
	6	1	**187-5080**	1	PLATE AS	
	7	1	*194-9387*	6	CLAMP AS (LOG)	
					(EACH INCLUDES)	
		1	**194-9386**	2	CLAMP	
		1	**197-5319**	1	PLATE	
	8	1	**195-7685**	6	ADAPTER	
I	9	1	**260-7389**	1	HOSE AS	
I	10	1	**285-6223**	1	HOSE AS	
M	11	1	**101-7401**	4	BOLT-SOCKET HEAD (M10X1.5X20-MM)	
	12	1	**6V-8397**	4	SEAL-O-RING	
M	13	1	**7X-2533**	12	BOLT (M6X1X35-MM)	

I - REFER TO HYDRAULIC INFORMATION SYSTEM
M - METRIC PART

417-9917 **LINES GP-AUXILIARY HYDRAULIC** (contd.) **i05921155**

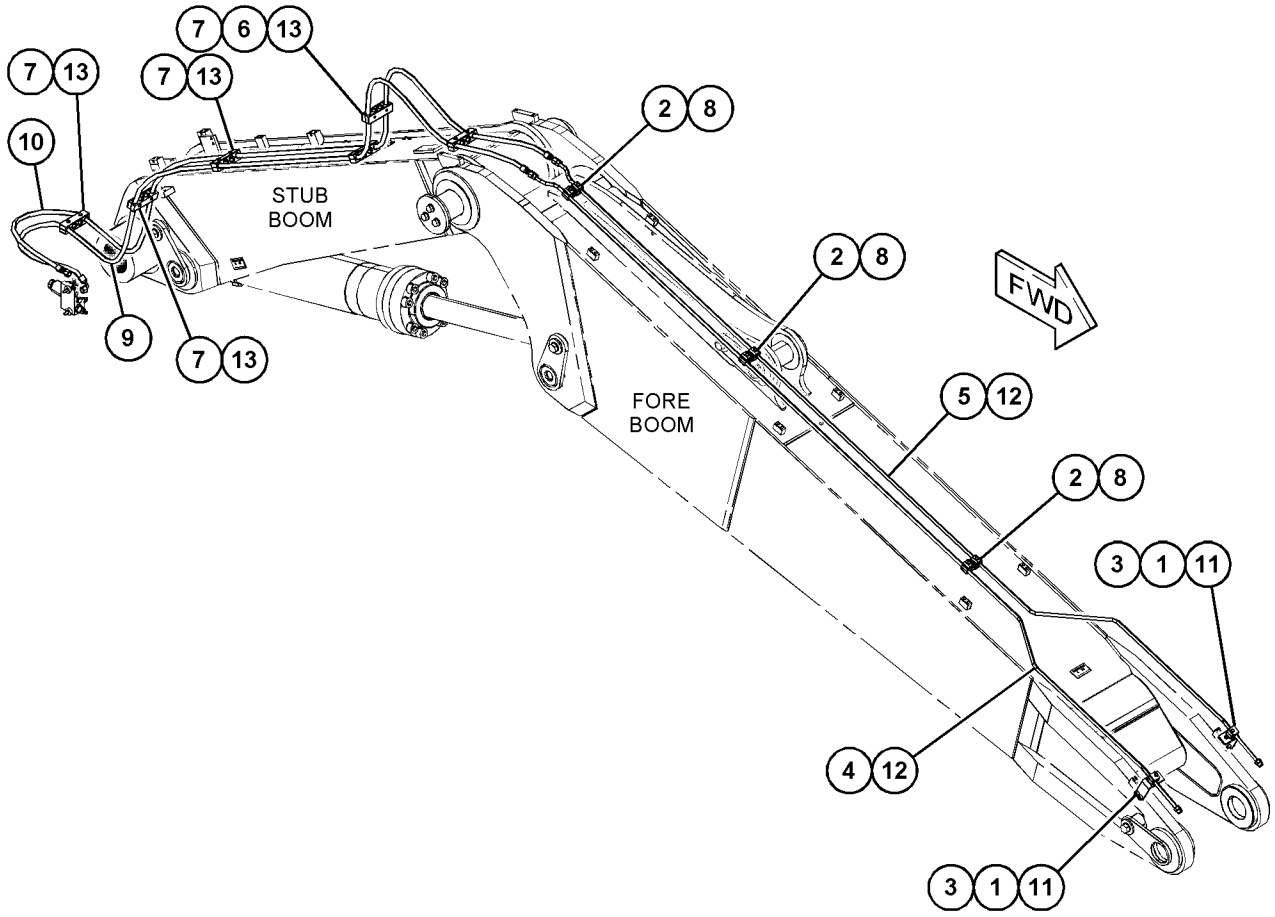

GRAPHIC #1 <END> g03571716

417-9919 LINES GP-AUXILIARY HYDRAULIC—VARIABLE

ADJUSTABLE BOOM

S/N: CH91-UP

MEDIUM PRESSURE FUNCTION, QUICK COUPLER

AN ATTACHMENT

SMCS-5057 **i05921162**

NOTE	REF NO	GRAPHIC REF	PART NUMBER	QTY	PART NAME 1 2 3 4 5 6 (PRODUCT LEVEL)	SEE PAGE
	1	1	**114-9324**	4	CLAMP-SINGLE	
	2	1	**114-9325**	6	CLAMP-DOUBLE	
	3	1	**179-9316**	2	PLATE AS	
	4	1	**185-6824**	1	TUBE AS	
	5	1	**185-6825**	1	TUBE AS	
	6	1	**185-6826**	1	TUBE AS	
	7	1	**185-6827**	1	TUBE AS	
	8	1	**187-5080**	1	PLATE AS	
	9	1	*194-9387*	6	CLAMP AS (LOG)	
					(EACH INCLUDES)	
		1	**194-9386**	2	CLAMP	
		1	**197-5319**	1	PLATE	
I	10	1	**260-7389**	1	HOSE AS	
I	11	1	**285-6223**	1	HOSE AS	
M	12	1	**101-7401**	4	BOLT-SOCKET HEAD (M10X1.5X20-MM)	
	13	1	**6V-8397**	4	SEAL-O-RING	
	14	1	**6V-8398**	4	SEAL-O-RING	
M	15	1	**7X-2533**	12	BOLT (M6X1X35-MM)	
I	16	1	**266-9581**	2	HOSE AS	

I - REFER TO HYDRAULIC INFORMATION SYSTEM
M - METRIC PART

417-9919 **LINES GP-AUXILIARY HYDRAULIC** (contd.) **i05921162**

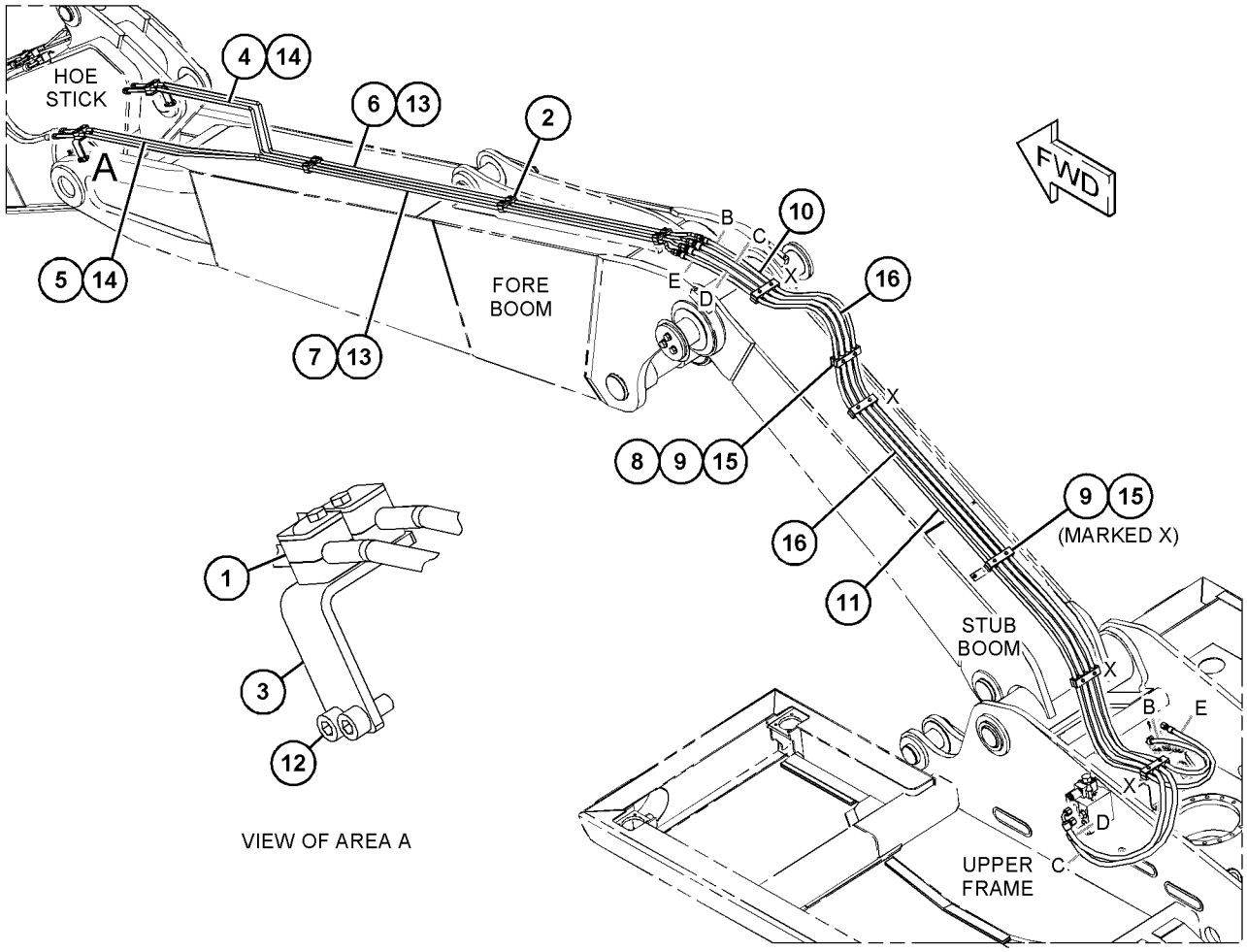

GRAPHIC #1 <END> g03574583

418-0020 LINES GP-AUXILIARY HYDRAULIC—HIGH PRESSURE FUNCTION, 1-PIECE BOOM

S/N: CH91-UP

PART OF 454-2118, 454-2129 VALVE & LINES AR AN ATTACHMENT

SMCS-5057 **i05937834**

NOTE	REF NO	GRAPHIC REF	PART NUMBER	QTY	PART NAME 1 2 3 4 5 6 (PRODUCT LEVEL)	SEE PAGE
I	1	1	**185-6804**	1	HOSE AS	
I	2	1	**196-7925**	1	HOSE AS	
	3	1	*263-5621*	6	CLAMP AS (TWIN)	
					(EACH INCLUDES)	
		1	**263-5131**	2	CLAMP	
		1	**263-5133**	4	GROMMET	
	4	1	*263-7058*	6	CLAMP AS	
					(EACH INCLUDES)	
		1	**263-5131**	2	CLAMP	
		1	**263-5134**	2	GROMMET	
		1	**263-6337**	2	GROMMET	
	5	1	**329-2381**	1	TUBE AS	
	6	1	**329-2382**	1	TUBE AS	
M	7	1	**101-7404**	24	BOLT-SOCKET HEAD (M10X1.5X30-MM)	
	8	1	**1P-3703**	1	SEAL-RECTANGULAR	
	9	1	**5K-9090**	4	SEAL-O-RING	
	10	1	**6V-0400**	2	FLANGE-HALF	
M	11	1	**8T-4184**	4	BOLT (M12X1.75X45-MM)	
	12	1	**8T-4223**	4	WASHER-HARD (13.5X25.5X3-MM THK)	

I - REFER TO HYDRAULIC INFORMATION SYSTEM
M - METRIC PART

418-0020 **LINES GP-AUXILIARY HYDRAULIC (**contd.**)** **i05937834**

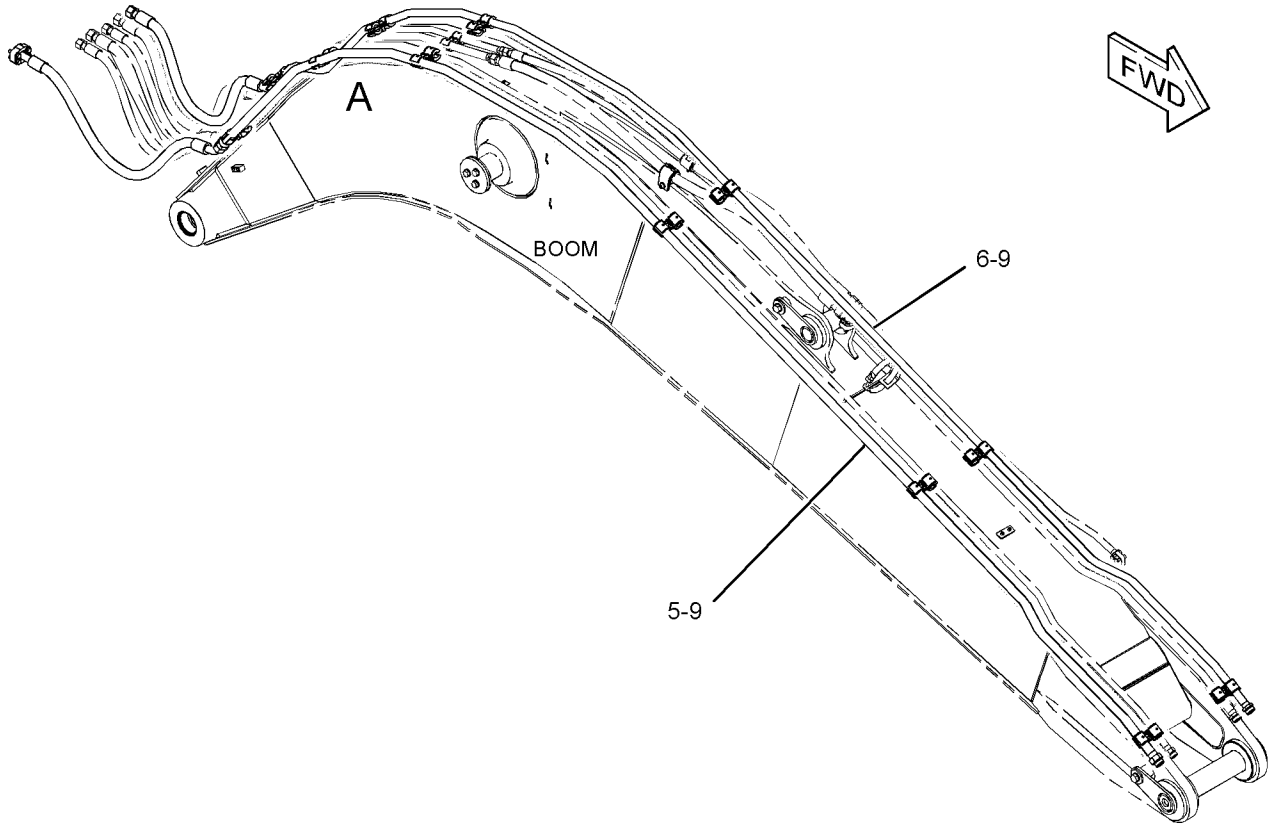

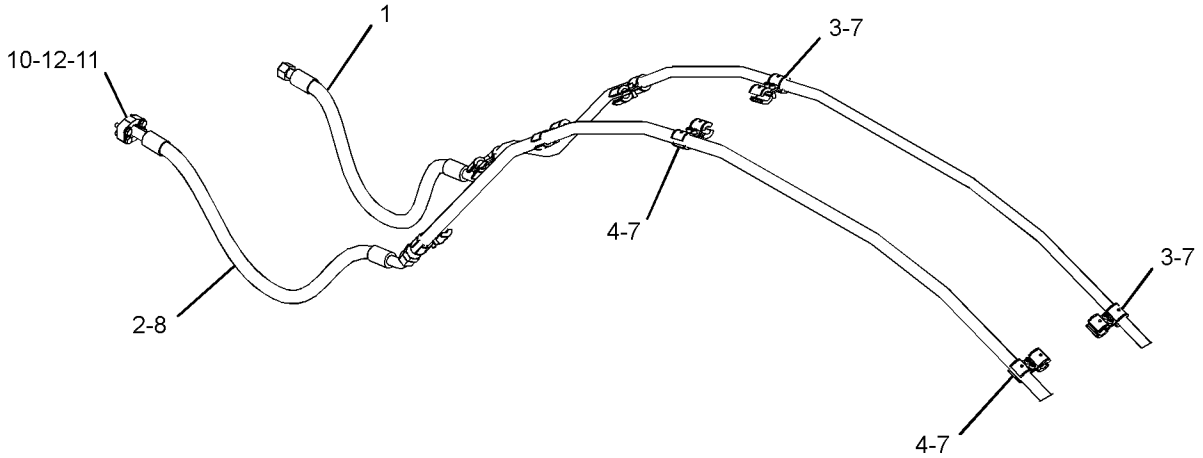

VIEW OF AREA A

GRAPHIC #1 <END> g03569136

418-0910 LINES GP-AUXILIARY HYDRAULIC—VARIABLE ADJ, HIGH PRESSURE

S/N: CH91-UP

PART OF 454-2122, 454-2126 VALVE & LINES AR

AN ATTACHMENT

SMCS-5057 **i05935304**

NOTE	REF NO	GRAPHIC REF	PART NUMBER	QTY	PART NAME 1 2 3 4 5 6 (PRODUCT LEVEL)	SEE PAGE
I	1	1	**191-1641**	1	HOSE AS	
I	2	1	**191-1642**	1	HOSE AS	
	3	1	*263-5618*	3	CLAMP AS (SINGLE)	
					(EACH INCLUDES)	
		1	**263-5132**	2	CLAMP	
		1	**263-5133**	2	GROMMET	
	4	1	*263-5619*	3	CLAMP AS (SINGLE)	
					(EACH INCLUDES)	
		1	**263-5132**	2	CLAMP	
		1	**263-5134**	2	GROMMET	
	5	1	*263-5621*	1	CLAMP AS (TWIN)	
		1	**263-5131**	2	CLAMP	
		1	**263-5133**	4	GROMMET	
	6	1	*263-7058*	1	CLAMP AS	
		1	**263-5131**	2	CLAMP	
		1	**263-5134**	2	GROMMET	
		1	**263-6337**	2	GROMMET	
	7		**329-2372**	1	TUBE AS	
	8	1	**329-2394**	1	TUBE AS	
M	9	1	**101-7398**	12	BOLT-SOCKET HEAD (M10X1.5X40-MM)	
M	10	1	**101-7404**	4	BOLT-SOCKET HEAD (M10X1.5X30-MM)	
M	11	1	**105-3478**	10	BOLT-SOCKET HEAD (M10X1.5X35-MM)	
	12	1	**1P-3703**	1	SEAL-RECTANGULAR	
	13	1	**5K-9090**	4	SEAL-O-RING	
	14	1	**5P-7468**	10	CLIP (SLOT)	
	15	1	**5P-7469**	10	CLIP (TAB)	
	16	1	**5P-8444**	10	GROMMET (37-MM ID)	
	17	1	**6V-0400**	2	FLANGE-HALF	
	18	1	**7X-7729**	10	WASHER (11X25X3-MM THK)	
M	19	1	**8T-4184**	4	BOLT (M12X1.75X45-MM)	
	20	1	**8T-4223**	4	WASHER-HARD (13.5X25.5X3-MM THK)	

I - REFER TO HYDRAULIC INFORMATION SYSTEM
M - METRIC PART

418-0910 **LINES GP-AUXILIARY HYDRAULIC** (contd.) **i05935304**

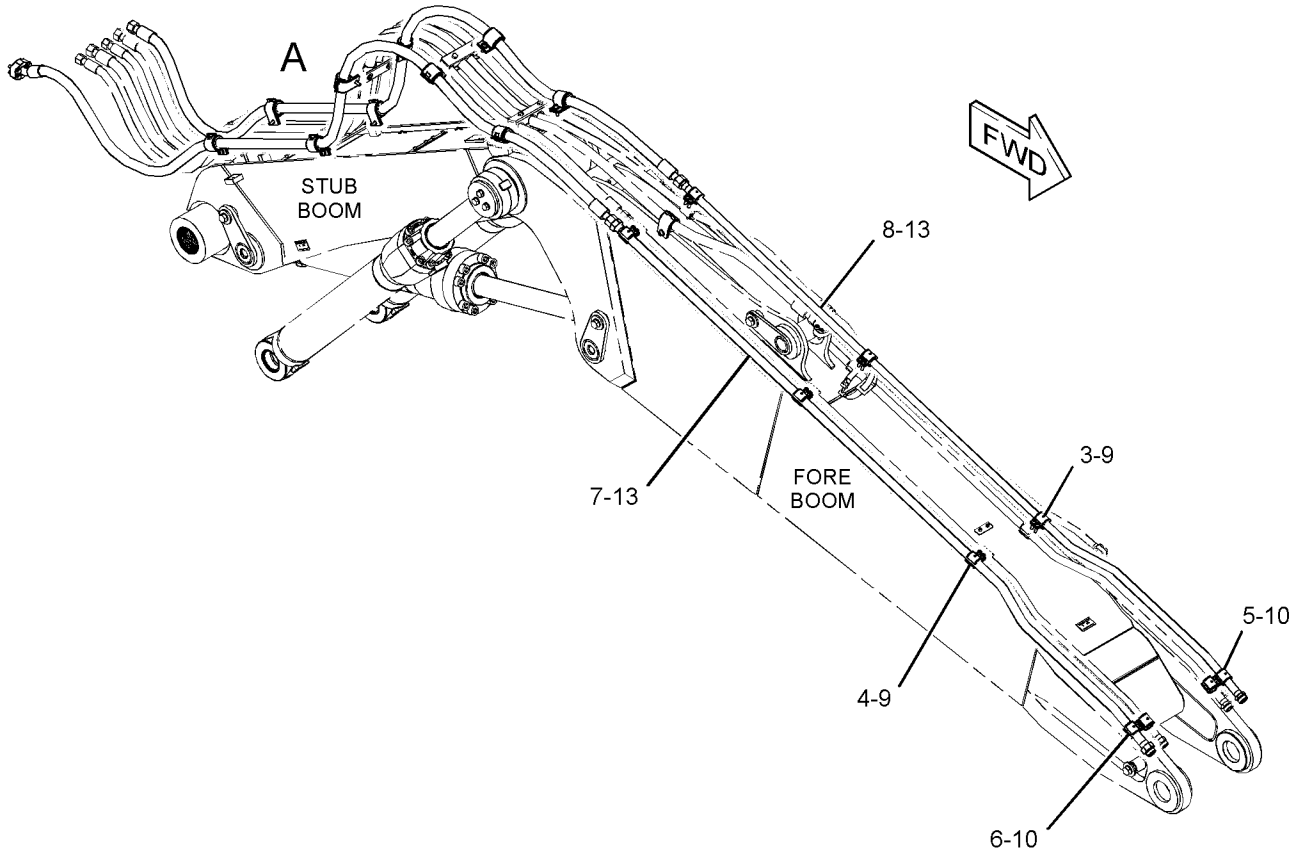

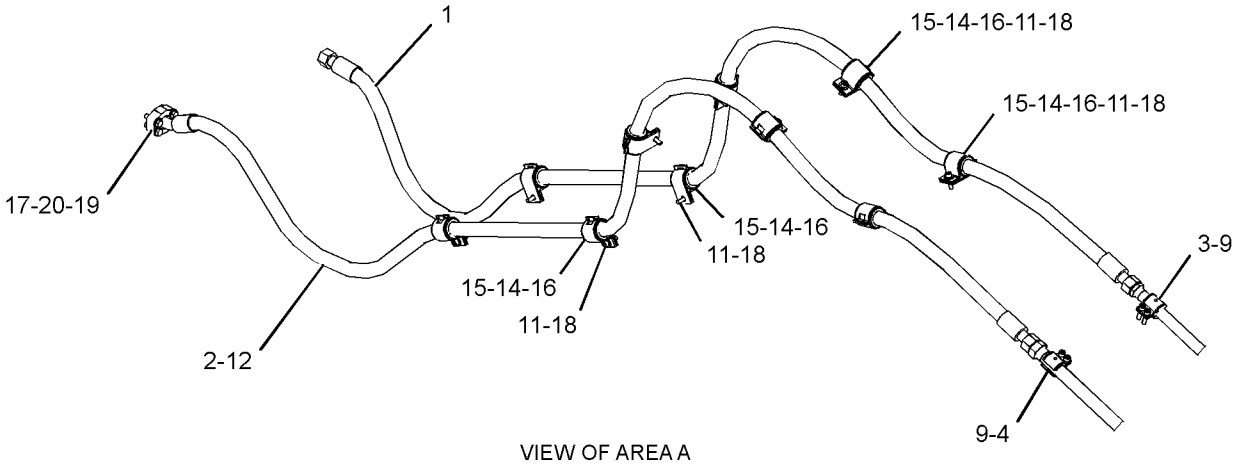

VIEW OF AREA A

GRAPHIC #1 <END> g03569156

471-0607 LINES GP-AUXILIARY HYDRAULIC—VARIABLE ADJ, QUICK COUPLER

S/N: CH91-UP

AN ATTACHMENT

SMCS-5057 **i06862410**

NOTE	REF NO	GRAPHIC REF	PART NUMBER	QTY	PART NAME 1 2 3 4 5 6 (PRODUCT LEVEL)	SEE PAGE
	1	1	**114-9324**	2	CLAMP-SINGLE	
	2	1	**114-9325**	6	CLAMP-DOUBLE	
	3	1	**179-9316**	2	PLATE AS	
	4	1	**185-6826**	1	TUBE AS	
	5	1	**185-6827**	1	TUBE AS	
	6	1	**187-5080**	1	PLATE AS	
	7	1	*194-9387*	6	CLAMP AS (LOG)	
					(EACH INCLUDES)	
		1	**194-9386**	2	CLAMP	
		1	**197-5319**	1	PLATE	
	8	1	**195-7685**	6	ADAPTER	
I	9	1	**260-7389**	1	HOSE AS	
I	10	1	**285-6223**	1	HOSE AS	
M	11	1	**101-7401**	4	BOLT-SOCKET HEAD (M10X1.5X20-MM)	
	12	1	**6V-8397**	4	SEAL-O-RING	
M	13	1	**7X-2533**	12	BOLT (M6X1X35-MM)	

I - REFER TO HYDRAULIC INFORMATION SYSTEM
M - METRIC PART

471-0607 **LINES GP-AUXILIARY HYDRAULIC (**contd.**)** **i06862410**

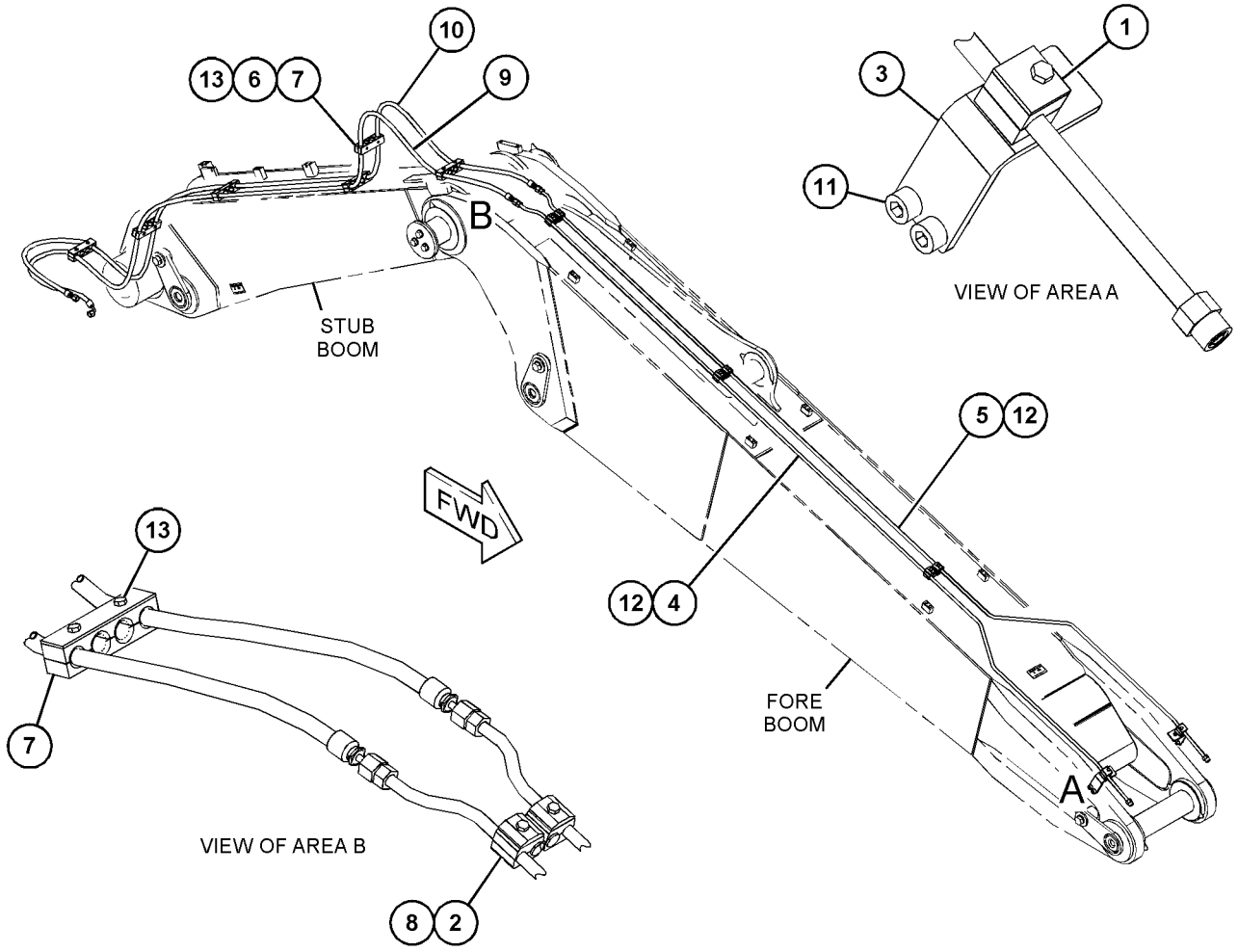

GRAPHIC #1 <END> g06151199

471-0610 LINES GP-AUXILIARY HYDRAULIC—VARIABLE ADJUSTABLE

S/N: CH91-UP
MEDIUM PRESSURE FUNCTION
AN ATTACHMENT

SMCS-5057 **i06862399**

NOTE	REF NO	GRAPHIC REF	PART NUMBER	QTY	PART NAME 1 2 3 4 5 6 (PRODUCT LEVEL)	SEE PAGE
	1	1	**114-9325**	6	CLAMP-DOUBLE	
	2	1	**179-9316**	2	PLATE AS	
	3	1	**185-6824**	1	TUBE AS	
	4	1	**185-6825**	1	TUBE AS	
	5	1	**187-5080**	1	PLATE AS	
	6	1	*194-9387*	6	CLAMP AS (LOG)	
					(EACH INCLUDES)	
		1	**194-9386**	2	CLAMP	
		1	**197-5319**	1	PLATE	
	7	1	**195-7685**	6	ADAPTER	
M	8	1	**101-7401**	4	BOLT-SOCKET HEAD (M10X1.5X20-MM)	
	9	1	**114-9324**	2	CLAMP-SINGLE	
	10	1	**6V-8398**	4	SEAL-O-RING	
M	11	1	**7X-2533**	12	BOLT (M6X1X35-MM)	
I	12	1	**266-9581**	2	HOSE AS	

I - REFER TO HYDRAULIC INFORMATION SYSTEM
M - METRIC PART

471-0610 **LINES GP-AUXILIARY HYDRAULIC** (contd.) **i06862399**

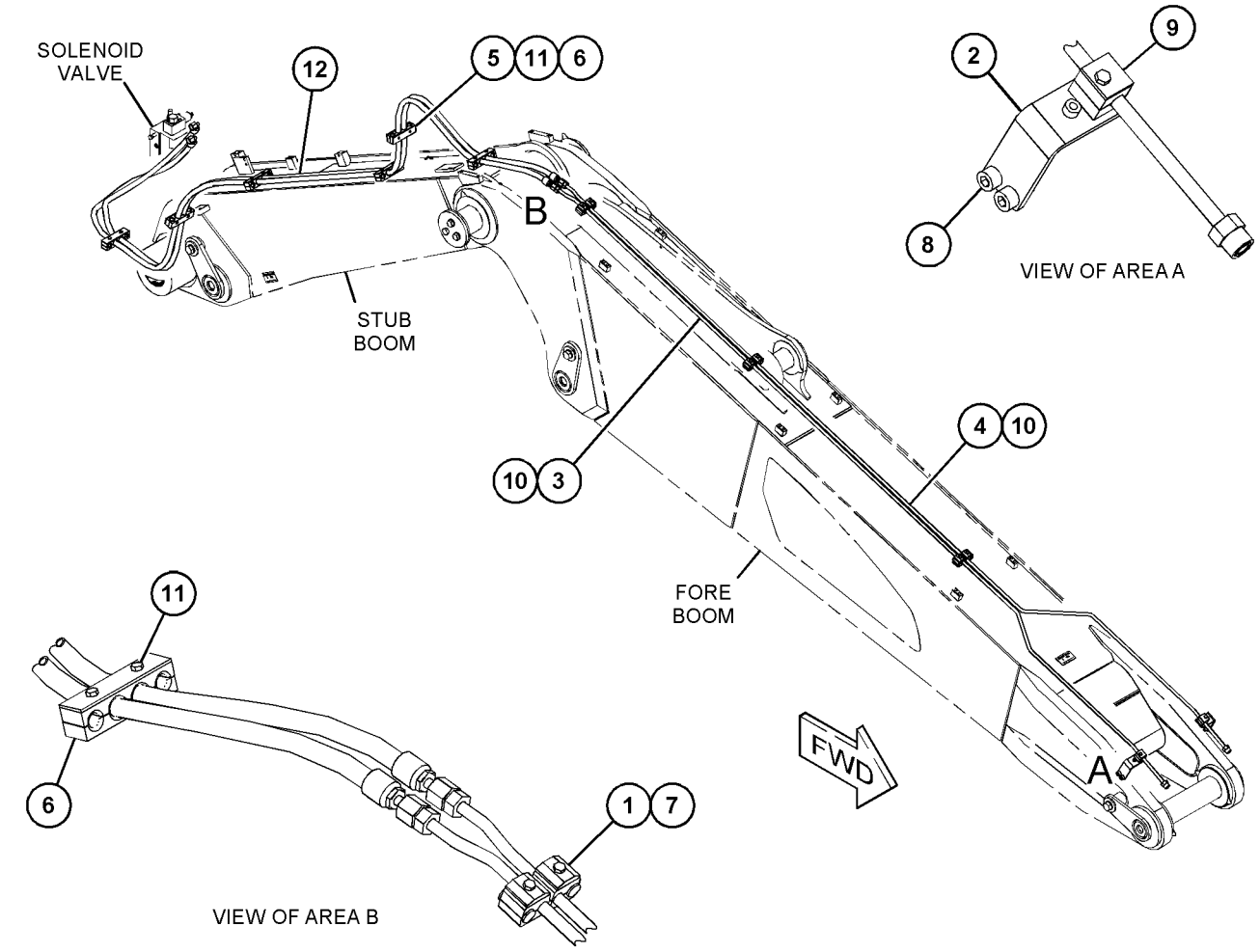

GRAPHIC #1 <END> g06151150

471-0613 LINES GP-AUXILIARY HYDRAULIC—VARIABLE ADJUSTABLE

S/N: CH91-UP
MEDIUM PRESSURE, QUICK COUPLER
AN ATTACHMENT

SMCS-5057 **i06862402**

NOTE	REF NO	GRAPHIC REF	PART NUMBER	QTY	PART NAME 1 2 3 4 5 6 (PRODUCT LEVEL)	SEE PAGE
	1	1	**114-9324**	4	CLAMP-SINGLE	
	2	1	**114-9325**	6	CLAMP-DOUBLE	
	3	1	**179-9316**	2	PLATE AS	
	4	1	**185-6824**	1	TUBE AS	
	5	1	**185-6825**	1	TUBE AS	
	6	1	**185-6826**	1	TUBE AS	
	7	1	**185-6827**	1	TUBE AS	
	8	1	**187-5080**	1	PLATE AS	
	9	1	*194-9387*	6	CLAMP AS (LOG)	
					(EACH INCLUDES)	
		1	**194-9386**	2	CLAMP	
		1	**197-5319**	1	PLATE	
I	10	1	**260-7389**	1	HOSE AS	
I	11	1	**285-6223**	1	HOSE AS	
M	12	1	**101-7401**	4	BOLT-SOCKET HEAD (M10X1.5X20-MM)	
	13	1	**6V-8397**	4	SEAL-O-RING	
	14	1	**6V-8398**	4	SEAL-O-RING	
M	15	1	**7X-2533**	12	BOLT (M6X1X35-MM)	
I	16	1	**266-9581**	2	HOSE AS	

I - REFER TO HYDRAULIC INFORMATION SYSTEM
M - METRIC PART

471-0613 **LINES GP-AUXILIARY HYDRAULIC** (contd.) **i06862402**

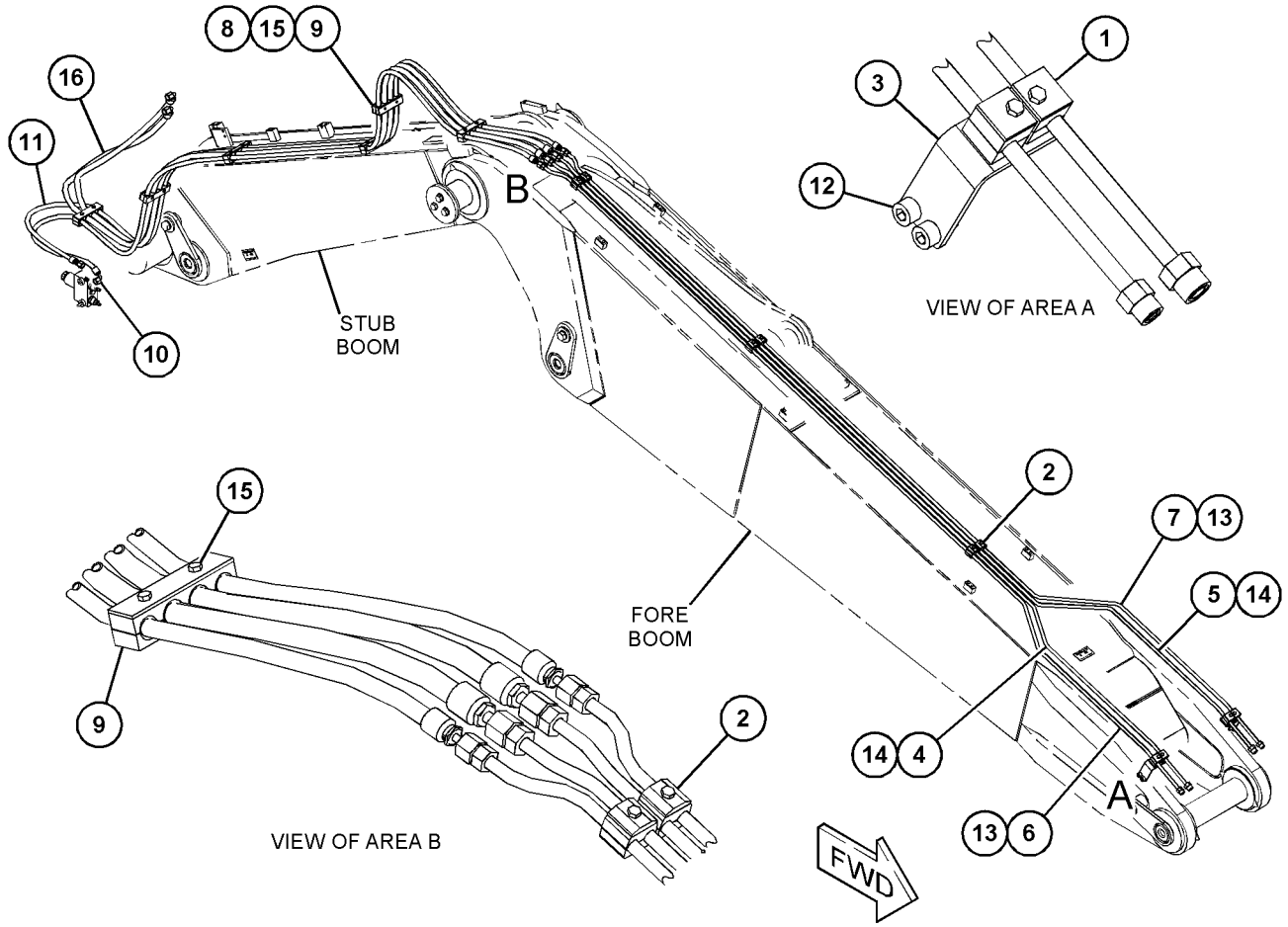

GRAPHIC #1 <END> g06151278

252-9767 LINES GP-BOOM—1-PIECE

S/N: CH91-UP

AN ATTACHMENT

SMCS-5057 **i05934538**

NOTE	REF NO	GRAPHIC REF	PART NUMBER	QTY	PART NAME 1 2 3 4 5 6 (PRODUCT LEVEL)	SEE PAGE
M	1	1	**101-7398**	4	BOLT-SOCKET HEAD (M10X1.5X40-MM)	
	2	1	**116-7286**	1	CLAMP-SINGLE	
	3	1	**151-8865**	1	ELBOW	
I	4	1	**185-6798**	1	HOSE AS	
I	5	1	**185-6799**	1	HOSE AS	
I	6	1	**185-6804**	2	HOSE AS	
I	7	1	**185-6805**	2	HOSE AS	
	8	1	**329-2383**	1	TUBE AS	
	9	1	**329-2382**	1	TUBE AS	
	10	1	**187-5076**	1	CLAMP AS	
	11	1	**329-2353**	1	TUBE AS	
	12	1	**329-2352**	1	TUBE AS	
	13	1	**329-2348**	1	TUBE AS	
	14	1	*263-5618*	6	CLAMP AS (SINGLE)	
					(EACH INCLUDES)	
		1	**263-5132**	2	CLAMP	
		1	**263-5133**	2	GROMMET	
	15	1	*263-6333*	3	CLAMP GP-HYDRAULIC LINES	
					(EACH INCLUDES)	
		1	**263-5129**	2	CLAMP-TWIN	
		1	**263-6335**	2	GROMMET	
		1	**263-6336**	2	GROMMET	
	16	1	*263-7038*	6	CLAMP GP-HYDRAULIC LINES	
					(EACH INCLUDES)	
		1	**263-5132**	2	CLAMP	
		1	**263-6337**	2	GROMMET	
M	17	1	**101-7404**	34	BOLT-SOCKET HEAD (M10X1.5X30-MM)	
	18	1	**4J-5267**	2	SEAL-O-RING	
	19	1	**5K-9090**	5	SEAL-O-RING	
	20	1	**5P-7466**	1	CLIP (SLOT)	
	21	1	**5P-7467**	1	CLIP (TAB)	
	22	1	**5P-7468**	1	CLIP (SLOT)	
	23	1	**5P-7469**	1	CLIP (TAB)	
	24	1	**5P-8112**	1	GROMMET	
	25	1	**5P-8444**	1	GROMMET (37-MM ID)	
	26	1	**6V-9746**	5	SEAL-O-RING	
	27	1	**7X-7729**	2	WASHER (11X25X3-MM THK)	
M	28	1	**105-3478**	2	BOLT-SOCKET HEAD (M10X1.5X35-MM)	

I - REFER TO HYDRAULIC INFORMATION SYSTEM
M - METRIC PART

252-9767 **LINES GP-BOOM** (contd.) **i05934538**

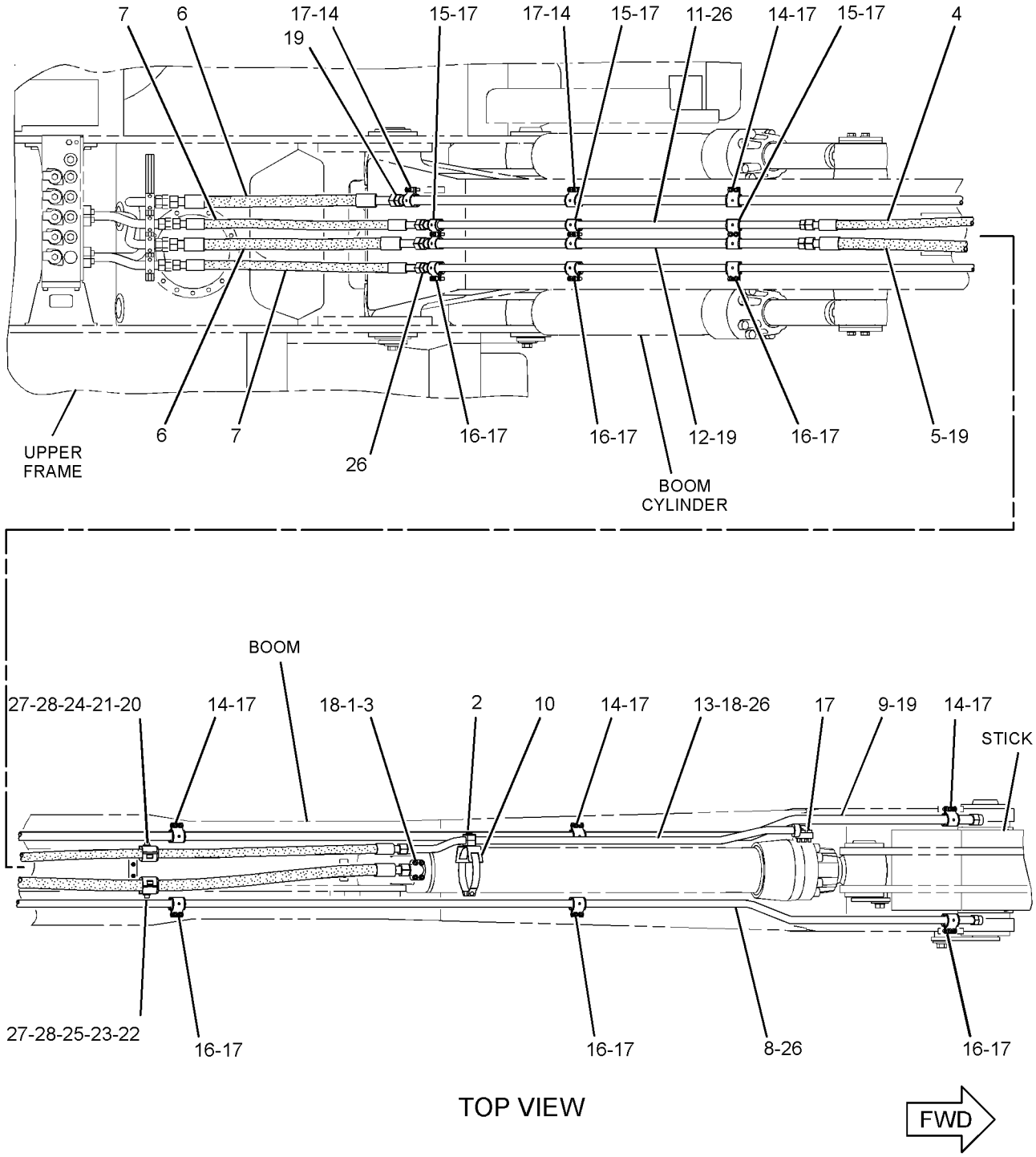

GRAPHIC #1 <END> g01384637

418-0023 LINES GP-BOOM–1-PIECE

S/N: CH91-UP
HIGH PRESSURE FUNCTION
PART OF 454-2118 VALVE & LINES AR
AN ATTACHMENT

SMCS-5057 **i05946689**

NOTE	REF NO	GRAPHIC REF	PART NUMBER	QTY	PART NAME 1 2 3 4 5 6 (PRODUCT LEVEL)	SEE PAGE
	1	1	**116-7286**	1	CLAMP-SINGLE	
I	2	1	**185-6798**	1	HOSE AS	
I	3	1	**185-6799**	1	HOSE AS	
	4	1	**187-5076**	1	CLAMP AS	
	5	1	*263-6333*	3	CLAMP GP-HYDRAULIC LINES	
					(EACH INCLUDES)	
		1	**263-5129**	2	CLAMP-TWIN	
		1	**263-6335**	2	GROMMET	
		1	**263-2336**	2	SHEET	
	6	1	**329-2348**	1	TUBE AS	
	7	1	**329-2352**	1	TUBE AS	
	8	1	**329-2353**	1	TUBE AS	
	9	1	**329-2382**	1	TUBE AS	
	10	1	**329-2383**	1	TUBE AS	
M	11	1	**101-7398**	4	BOLT-SOCKET HEAD (M10X1.5X40-MM)	
M	12	1	**101-7404**	10	BOLT-SOCKET HEAD (M10X1.5X30-MM)	
M	13	1	**105-3478**	2	BOLT-SOCKET HEAD (M10X1.5X35-MM)	
	14	1	**151-8865**	1	ELBOW	
	15	1	**4J-5267**	2	SEAL-O-RING	
	16	1	**5K-9090**	5	SEAL-O-RING	
	17	1	**5P-7466**	1	CLIP (SLOT)	
	18	1	**5P-7467**	1	CLIP (TAB)	
	19	1	**5P-7468**	1	CLIP (SLOT)	
	20	1	**5P-7469**	1	CLIP (TAB)	
	21	1	**5P-8112**	1	GROMMET	
	22	1	**5P-8444**	1	GROMMET (37-MM ID)	
	23	1	**6V-9746**	5	SEAL-O-RING	
	24	1	**7X-7729**	2	WASHER (11X25X3-MM THK)	
I	25	1	**185-6804**	2	HOSE AS	
I	26	1	**185-6805**	2	HOSE AS	

I - REFER TO HYDRAULIC INFORMATION SYSTEM
M - METRIC PART

418-0023 **LINES GP-BOOM (**contd.**)** **i05946689**

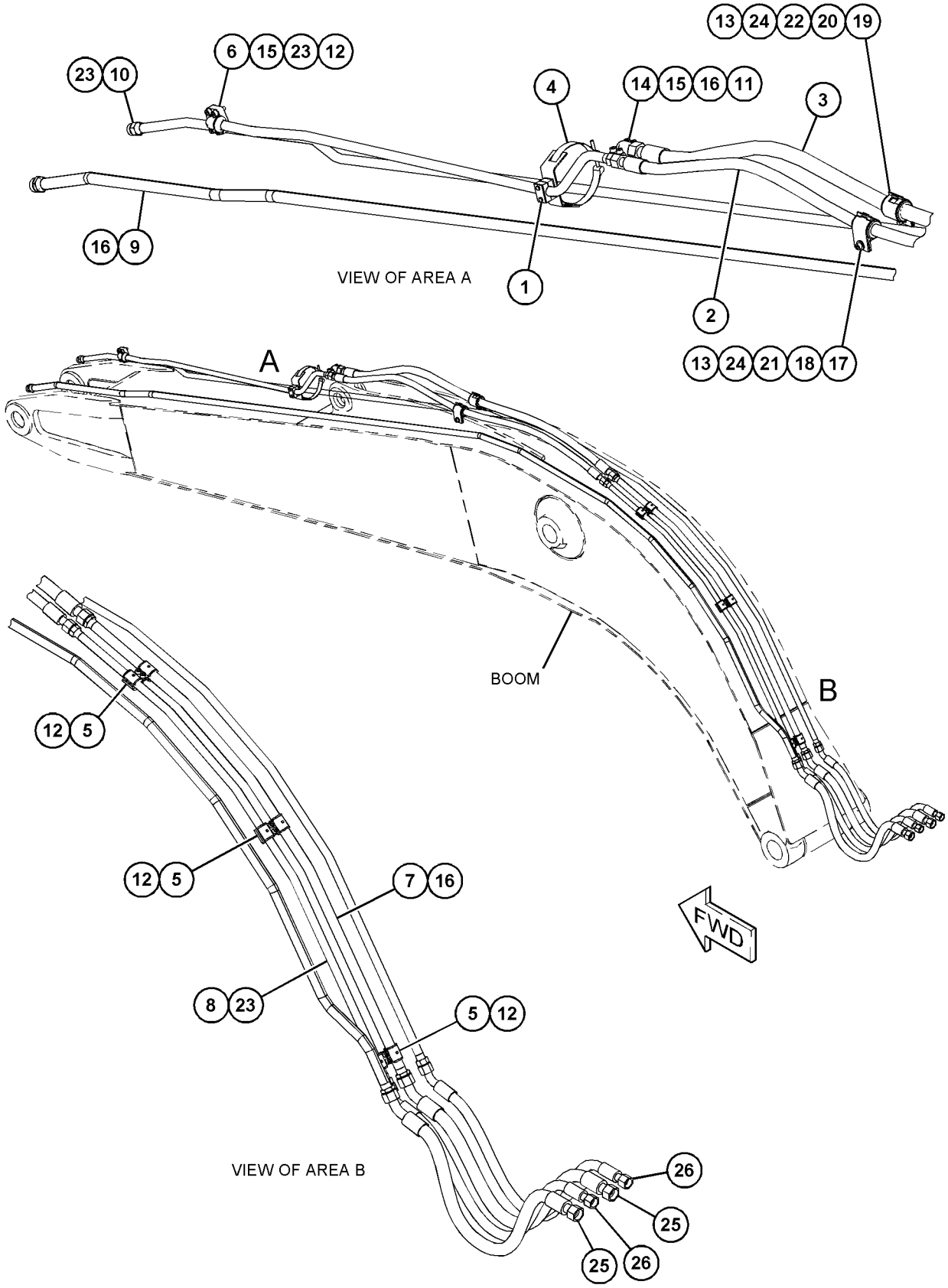

GRAPHIC #1 <END> g03742619

418-0908 LINES GP-BOOM—VARIABLE ADJUSTABLE

S/N: CH91-UP

AN ATTACHMENT

SMCS-5057 **i05946695**

NOTE	REF NO	GRAPHIC REF	PART NUMBER	QTY	PART NAME 1 2 3 4 5 6 (PRODUCT LEVEL)	SEE PAGE
	1	1	**116-7286**	1	CLAMP-SINGLE	
I	2	1	**185-6791**	1	HOSE AS	
I	3	1	**185-6792**	1	HOSE AS	
I	4	1	**185-6793**	1	HOSE AS	
	5	1	**187-5076**	1	CLAMP AS	
	6	1	**187-5079**	2	PLATE AS	
	7	1	**189-2060**	1	PLATE AS	
	8	1	**189-2062**	2	PLATE AS	
I	9	1	**191-1641**	1	HOSE AS	
	10	1	*194-9391*	5	CLAMP GP-HYDRAULIC LINES	
					(EACH INCLUDES)	
		1	**187-5081**	2	SPACER (12.8X20X49-MM THK)	
		1	**189-2055**	1	PLATE	
		1	**194-9397**	2	CLAMP	
	11	1	*263-5618*	4	CLAMP AS (SINGLE)	
					(EACH INCLUDES)	
		1	**263-5132**	2	CLAMP	
		1	**263-5133**	2	GROMMET	
	12	1	*263-7038*	1	CLAMP GP-HYDRAULIC LINES	
		1	**263-5132**	2	CLAMP	
		1	**263-6337**	2	GROMMET	
	13	1	*263-7116*	3	CLAMP AS	
					(EACH INCLUDES)	
		1	**263-5130**	2	CLAMP-SINGLE	
		1	**263-6336**	2	GROMMET	
	14	1	**329-2348**	1	TUBE AS	
	15	1	**329-2373**	1	TUBE AS	
	16	1	**329-2374**	1	TUBE AS	
M	17	1	**101-7398**	4	BOLT-SOCKET HEAD (M10X1.5X40-MM)	
M	18	1	**101-7404**	28	BOLT-SOCKET HEAD (M10X1.5X30-MM)	
M	19	1	**105-3478**	2	BOLT-SOCKET HEAD (M10X1.5X35-MM)	
	20	1	**151-8865**	1	ELBOW	
	21	1	**4J-5267**	2	SEAL-O-RING	
	22	1	**5K-9090**	3	SEAL-O-RING	
	23	1	**5P-7466**	1	CLIP (SLOT)	
	24	1	**5P-7467**	1	CLIP (TAB)	
	25	1	**5P-7468**	1	CLIP (SLOT)	
	26	1	**5P-7469**	1	CLIP (TAB)	
	27	1	**5P-8112**	1	GROMMET	
	28	1	**5P-8444**	1	GROMMET (37-MM ID)	
	29	1	**6V-9746**	3	SEAL-O-RING	
	30	1	**7X-7729**	2	WASHER (11X25X3-MM THK)	
M	31	1	**7Y-7992**	10	BOLT (M12X1.75X75-MM)	
	32	1	**8T-4121**	12	WASHER-HARD (11X21X2.5-MM THK)	
M	33	1	**8T-4136**	4	BOLT (M10X1.5X25-MM)	

I - REFER TO HYDRAULIC INFORMATION SYSTEM
M - METRIC PART

418-0908 **LINES GP-BOOM (**contd.**)** **i05946695**

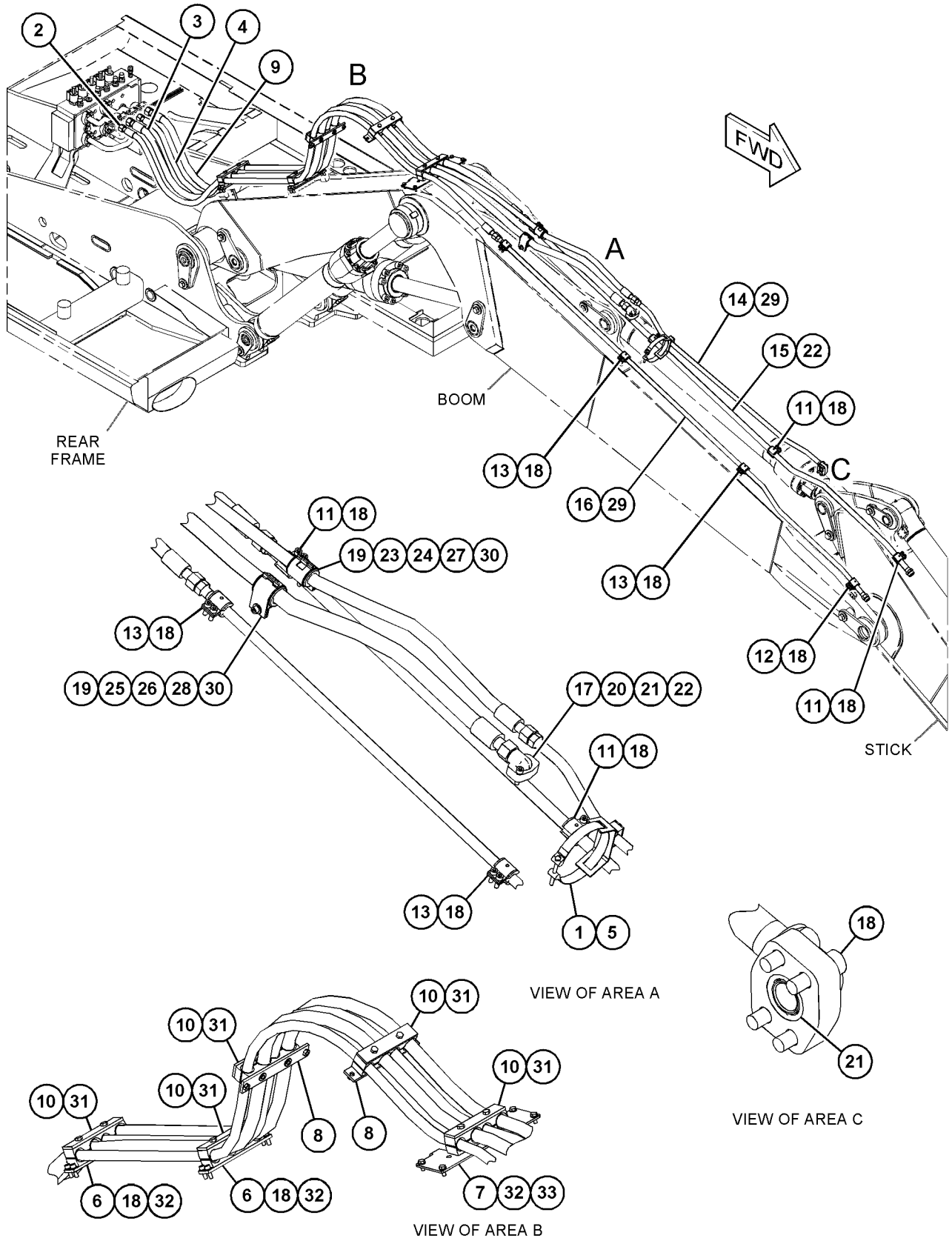

GRAPHIC #1 <END> g03742811

418-0911 LINES GP-BOOM—VARIABLE ADJUSTABLE

S/N: CH91-UP
HIGH PRESSURE FUNCTION
PART OF 454-2122 VALVE & LINES AR
AN ATTACHMENT

SMCS-5057 **i05946692**

NOTE	REF NO	GRAPHIC REF	PART NUMBER	QTY	PART NAME 1 2 3 4 5 6 (PRODUCT LEVEL)	SEE PAGE
	1	1	**116-7286**	1	CLAMP-SINGLE	
I	2	1	**185-6791**	1	HOSE AS	
I	3	1	**185-6792**	1	HOSE AS	
I	4	1	**185-6793**	1	HOSE AS	
	5	1	**187-5076**	1	CLAMP AS	
	6	1	**187-5079**	2	PLATE AS	
	7	1	**189-2060**	1	PLATE AS	
	8	1	**189-2062**	2	PLATE AS	
I	9	1	**191-1641**	1	HOSE AS	
	10	1	*194-9391*	5	CLAMP GP-HYDRAULIC LINES	
					(EACH INCLUDES)	
		1	**187-5081**	2	SPACER (12.8X20X49-MM THK)	
		1	**189-2055**	1	PLATE	
		1	**194-9397**	2	CLAMP	
	11	1	*263-5618*	3	CLAMP AS (SINGLE)	
					(EACH INCLUDES)	
		1	**263-5132**	2	CLAMP	
		1	**263-5133**	2	GROMMET	
	12	1	*263-7116*	3	CLAMP AS	
					(EACH INCLUDES)	
		1	**263-5130**	2	CLAMP-SINGLE	
		1	**263-6336**	2	GROMMET	
	13	1	**329-2348**	1	TUBE AS	
	14	1	**329-2373**	1	TUBE AS	
	15	1	**329-2374**	1	TUBE AS	
M	16	1	**101-7398**	4	BOLT-SOCKET HEAD (M10X1.5X40-MM)	
M	17	1	**101-7404**	12	BOLT-SOCKET HEAD (M10X1.5X30-MM)	
M	18	1	**105-3478**	2	BOLT-SOCKET HEAD (M10X1.5X35-MM)	
	19	1	**151-8865**	1	ELBOW	
	20	1	**4J-5267**	2	SEAL-O-RING	
	21	1	**5K-9090**	3	SEAL-O-RING	
	22	1	**5P-7466**	1	CLIP (SLOT)	
	23	1	**5P-7467**	1	CLIP (TAB)	
	24	1	**5P-7468**	1	CLIP (SLOT)	
	25	1	**5P-7469**	1	CLIP (TAB)	
	26	1	**5P-8112**	1	GROMMET	
	27	1	**5P-8444**	1	GROMMET (37-MM ID)	
	28	1	**6V-9746**	3	SEAL-O-RING	
	29	1	**7X-7729**	2	WASHER (11X25X3-MM THK)	
M	30	1	**7Y-7992**	10	BOLT (M12X1.75X75-MM)	
	31	1	**8T-4121**	12	WASHER-HARD (11X21X2.5-MM THK)	
M	32	1	**8T-4136**	4	BOLT (M10X1.5X25-MM)	

I - REFER TO HYDRAULIC INFORMATION SYSTEM
M - METRIC PART

418-0911 **LINES GP-BOOM (**contd.**)** **i05946692**

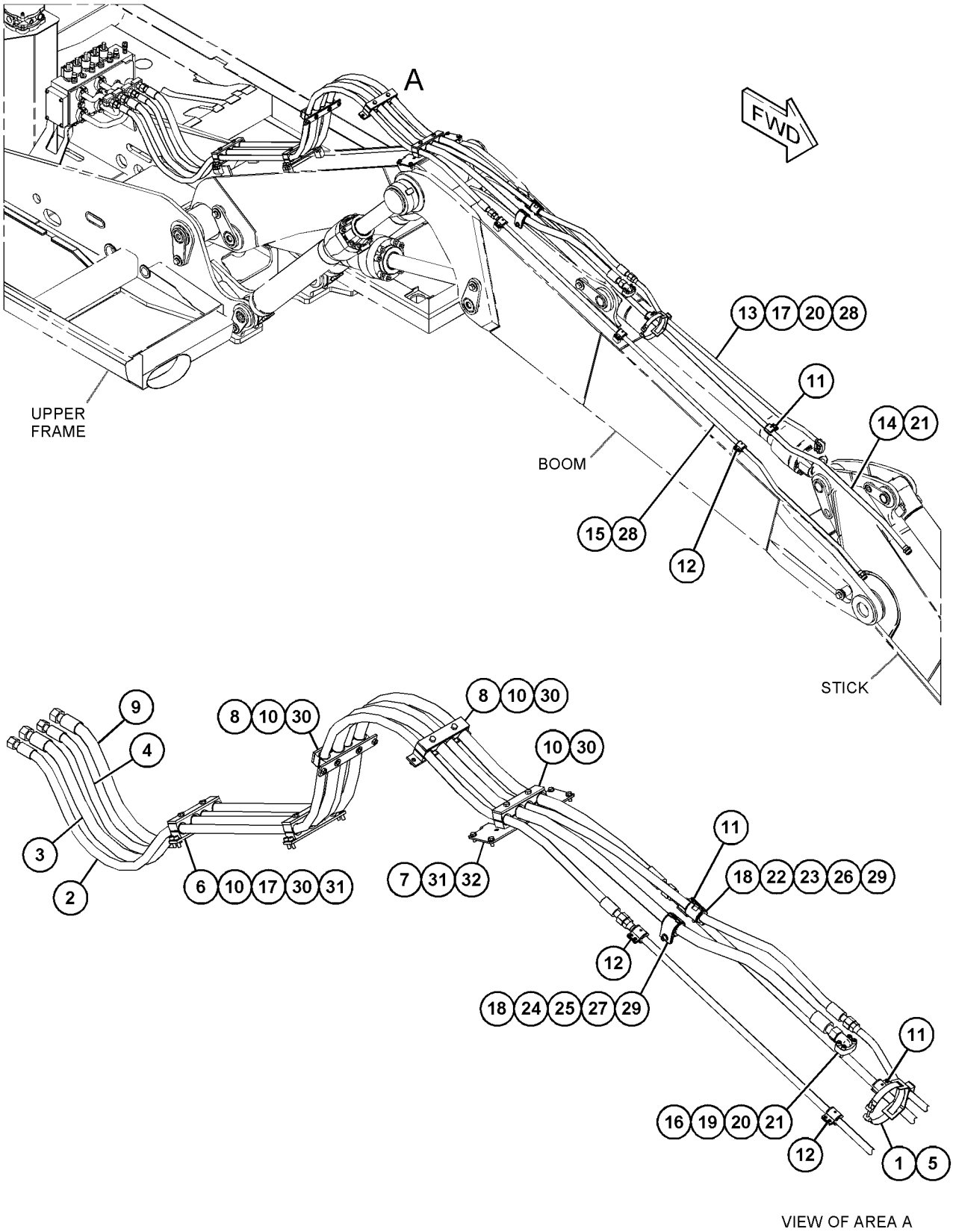

GRAPHIC #1 <END> g03736586

540-3994 LINES GP-BOOM—1-PIECE

S/N: CH91-UP

AN ATTACHMENT

SMCS-5057 **i07833396**

NOTE	REF NO	GRAPHIC REF	PART NUMBER	QTY	PART NAME 1 2 3 4 5 6 (PRODUCT LEVEL)	SEE PAGE
M	1	1	**101-7398**	4	BOLT-SOCKET HEAD (M10X1.5X40-MM)	
M	2	1	**105-3478**	2	BOLT-SOCKET HEAD (M10X1.5X35-MM)	
	3	1	**116-7286**	1	CLAMP-SINGLE	
	4	1	**151-8865**	1	ELBOW	
I	5	1	**185-6798**	1	HOSE AS	
I	6	1	**185-6799**	1	HOSE AS	
	7	1	**187-5076**	1	CLAMP AS	
	8	1	*263-5618*	6	CLAMP AS (SINGLE)	
					(EACH INCLUDES)	
		1	**263-5132**	2	CLAMP	
		1	**263-5133**	2	GROMMET	
	9	1	*263-6333*	3	CLAMP GP-HYDRAULIC LINES	
					(EACH INCLUDES)	
		1	**263-5129**	2	CLAMP-TWIN	
		1	**263-6335**	2	GROMMET	
		1	**263-6336**	2	GROMMET	
	10	1	*263-7038*	6	CLAMP GP-HYDRAULIC LINES	
					(EACH INCLUDES)	
		1	**263-5132**	2	CLAMP	
		1	**263-6337**	2	GROMMET	
	11	1	**540-4001**	1	TUBE AS	
	12	1	**329-2352**	1	TUBE AS	
	13	1	**329-2353**	1	TUBE AS	
	14	1	**329-2382**	1	TUBE AS	
	15	1	**329-2383**	1	TUBE AS	
M	16	1	**101-7404**	34	BOLT-SOCKET HEAD (M10X1.5X30-MM)	
	17	1	**4J-5267**	2	SEAL-O-RING	
	18	1	**5K-9090**	5	SEAL-O-RING	
	19	1	**5P-7466**	1	CLIP (SLOT)	
	20	1	**5P-7467**	1	CLIP (TAB)	
	21	1	**5P-7468**	1	CLIP (SLOT)	
	22	1	**5P-7469**	1	CLIP (TAB)	
	23	1	**5P-8112**	1	GROMMET	
	24	1	**5P-8444**	1	GROMMET (37-MM ID)	
	25	1	**6V-9746**	5	SEAL-O-RING	
	26	1	**7X-7729**	2	WASHER (11X25X3-MM THK)	
I	27	1	**185-6804**	2	HOSE AS	
I	28	1	**185-6805**	2	HOSE AS	

I - REFER TO HYDRAULIC INFORMATION SYSTEM
M - METRIC PART

540-3994 **LINES GP-BOOM (**contd.**)** **i07833396**

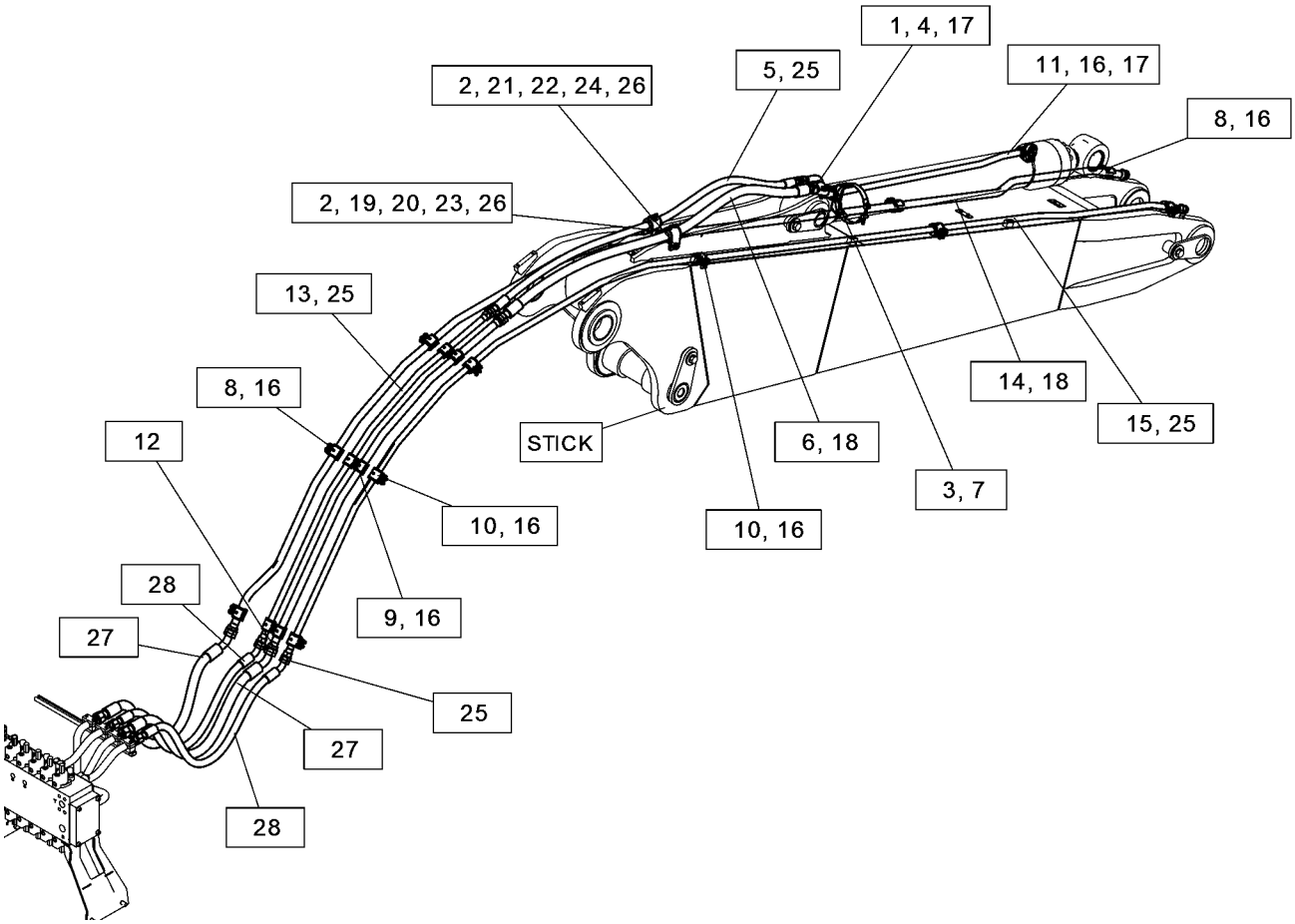

GRAPHIC #1 <END> g06271277

540-3997 LINES GP-BOOM—VARIABLE ADJUSTABLE

S/N: CH91-UP

AN ATTACHMENT

SMCS-5057 **i07270703**

NOTE	REF NO	GRAPHIC REF	PART NUMBER	QTY	PART NAME 1 2 3 4 5 6 (PRODUCT LEVEL)	SEE PAGE
	1	1	**116-7286**	1	CLAMP-SINGLE	
I	2	1	**185-6791**	1	HOSE AS	
I	3	1	**185-6792**	1	HOSE AS	
I	4	1	**185-6793**	1	HOSE AS	
	5	1	**187-5076**	1	CLAMP AS	
	6	1	**187-5079**	2	PLATE AS	
	7	1	**189-2060**	1	PLATE AS	
	8	1	**189-2062**	2	PLATE AS	
I	9	1	**191-1641**	1	HOSE AS	
	10	1	*194-9391*	5	CLAMP GP-HYDRAULIC LINES	
					(EACH INCLUDES)	
		1	**187-5081**	2	SPACER (12.8X20X49-MM THK)	
		1	**189-2055**	1	PLATE	
		1	**194-9397**	2	CLAMP	
	11	1	*263-5618*	4	CLAMP AS (SINGLE)	
					(EACH INCLUDES)	
		1	**263-5133**	2	GROMMET	
	12	1	*263-7038*	1	CLAMP GP-HYDRAULIC LINES	
		1	**263-5132**	2	CLAMP	
		1	**263-6337**	2	GROMMET	
	13	1	*263-7116*	3	CLAMP AS	
					(EACH INCLUDES)	
		1	**263-6336**	2	GROMMET	
	14	1	**329-2373**	1	TUBE AS	
	15	1	**329-2374**	1	TUBE AS	
	16	1	**540-4001**	1	TUBE AS	
M	17	1	**101-7398**	4	BOLT-SOCKET HEAD (M10X1.5X40-MM)	
M	18	1	**101-7404**	28	BOLT-SOCKET HEAD (M10X1.5X30-MM)	
M	19	1	**105-3478**	2	BOLT-SOCKET HEAD (M10X1.5X35-MM)	
	20	1	**151-8865**	1	ELBOW	
	21	1	**4J-5267**	2	SEAL-O-RING	
	22	1	**5K-9090**	3	SEAL-O-RING	
	23	1	**5P-7466**	1	CLIP (SLOT)	
	24	1	**5P-7467**	1	CLIP (TAB)	
	25	1	**5P-7468**	1	CLIP (SLOT)	
	26	1	**5P-7469**	1	CLIP (TAB)	
	27	1	**5P-8112**	1	GROMMET	
	28	1	**5P-8444**	1	GROMMET (37-MM ID)	
	29	1	**6V-9746**	3	SEAL-O-RING	
	30	1	**7X-7729**	2	WASHER (11X25X3-MM THK)	
M	31	1	**7Y-7992**	10	BOLT (M12X1.75X75-MM)	
	32	1	**8T-4121**	12	WASHER-HARD (11X21X2.5-MM THK)	
M	33	1	**8T-4136**	4	BOLT (M10X1.5X25-MM)	

I - REFER TO HYDRAULIC INFORMATION SYSTEM
M - METRIC PART

540-3997 **LINES GP-BOOM (**contd.**)** **i07270703**

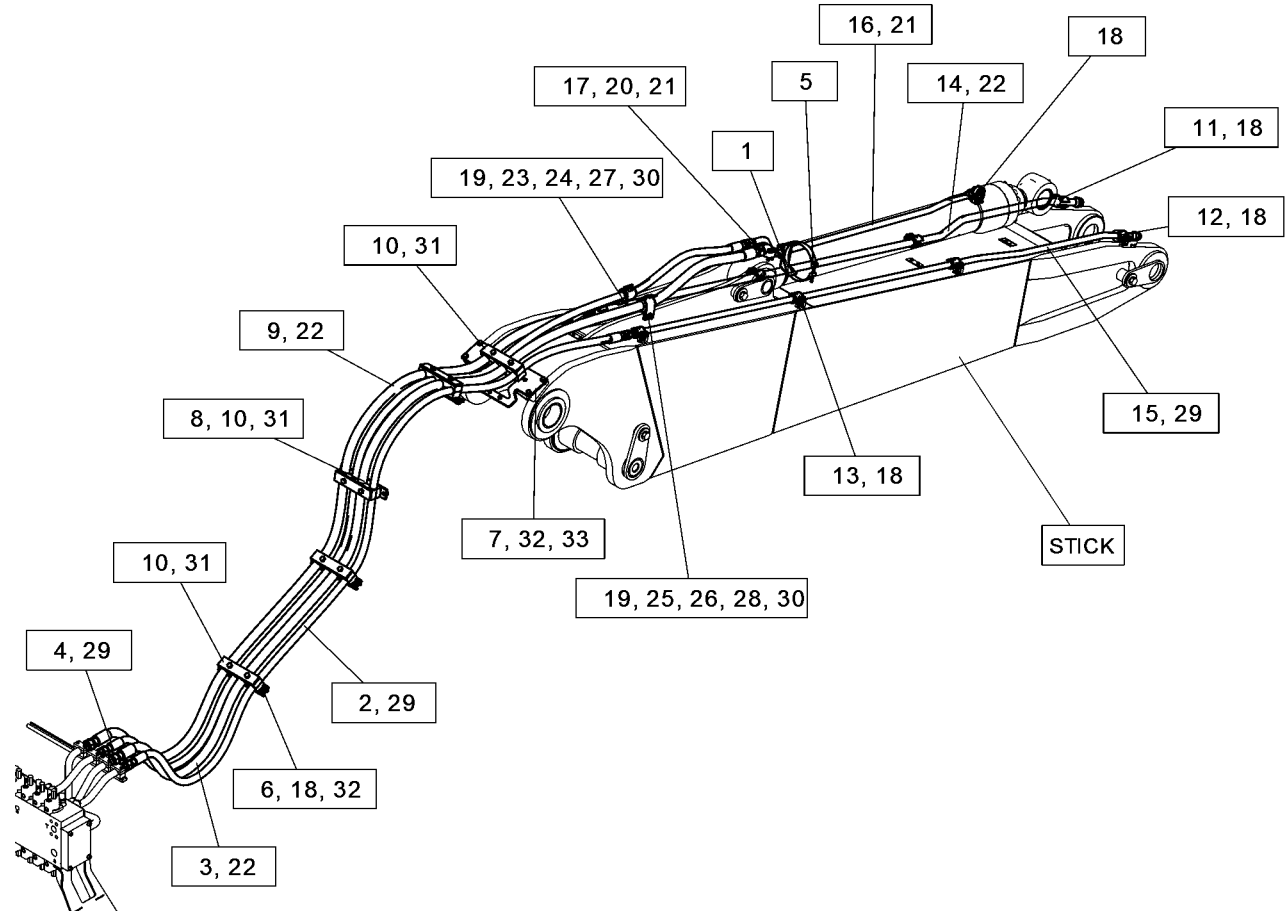

GRAPHIC #1 <END> g06271166

540-4002 LINES GP-BOOM—VARIABLE ADJ, HIGH PRESSURE

S/N: CH91-UP

PART OF 454-2122 VALVE & LINES AR

AN ATTACHMENT

SMCS-5057 **i07269796**

NOTE	REF NO	GRAPHIC REF	PART NUMBER	QTY	PART NAME 1 2 3 4 5 6 (PRODUCT LEVEL)	SEE PAGE
	1	1	**116-7286**	1	CLAMP-SINGLE	
I	2	1	**185-6791**	1	HOSE AS	
I	3	1	**185-6792**	1	HOSE AS	
I	4	1	**185-6793**	1	HOSE AS	
	5	1	**187-5076**	1	CLAMP AS	
	6	1	**187-5079**	2	PLATE AS	
	7	1	**189-2060**	1	PLATE AS	
	8	1	**189-2062**	2	PLATE AS	
I	9	1	**191-1641**	1	HOSE AS	
	10	1	*194-9391*	5	CLAMP GP-HYDRAULIC LINES	
					(EACH INCLUDES)	
		1	**187-5081**	2	SPACER (12.8X20X49-MM THK)	
		1	**194-9397**	2	CLAMP	
		1	**189-2055**	1	PLATE	
	11	1	*263-5618*	3	CLAMP AS (SINGLE)	
					(EACH INCLUDES)	
		1	**263-5133**	2	GROMMET	
		1	**263-5132**	2	CLAMP	
	12	1	*263-7116*	3	CLAMP AS	
					(EACH INCLUDES)	
		1	**263-6336**	2	GROMMET	
		1	**263-5130**	2	CLAMP-SINGLE	
	13	1	**329-2373**	1	TUBE AS	
	14	1	**329-2374**	1	TUBE AS	
	15	1	**540-4001**	1	TUBE AS	
M	16	1	**101-7398**	4	BOLT-SOCKET HEAD (M10X1.5X40-MM)	
M	17	1	**101-7404**	12	BOLT-SOCKET HEAD (M10X1.5X30-MM)	
M	18	1	**105-3478**	2	BOLT-SOCKET HEAD (M10X1.5X35-MM)	
	19	1	**151-8865**	1	ELBOW	
	20	1	**4J-5267**	2	SEAL-O-RING	
	21	1	**5K-9090**	3	SEAL-O-RING	
	22	1	**5P-7466**	1	CLIP (SLOT)	
	23	1	**5P-7467**	1	CLIP (TAB)	
	24	1	**5P-7468**	1	CLIP (SLOT)	
	25	1	**5P-7469**	1	CLIP (TAB)	
	26	1	**5P-8112**	1	GROMMET	
	27	1	**5P-8444**	1	GROMMET (37-MM ID)	
	28	1	**6V-9746**	3	SEAL-O-RING	
	29	1	**7X-7729**	2	WASHER (11X25X3-MM THK)	
M	30	1	**7Y-7992**	10	BOLT (M12X1.75X75-MM)	
	31	1	**8T-4121**	12	WASHER-HARD (11X21X2.5-MM THK)	
M	32	1	**8T-4136**	4	BOLT (M10X1.5X25-MM)	

I - REFER TO HYDRAULIC INFORMATION SYSTEM
M - METRIC PART

540-4002 **LINES GP-BOOM** (contd.) **i07269796**

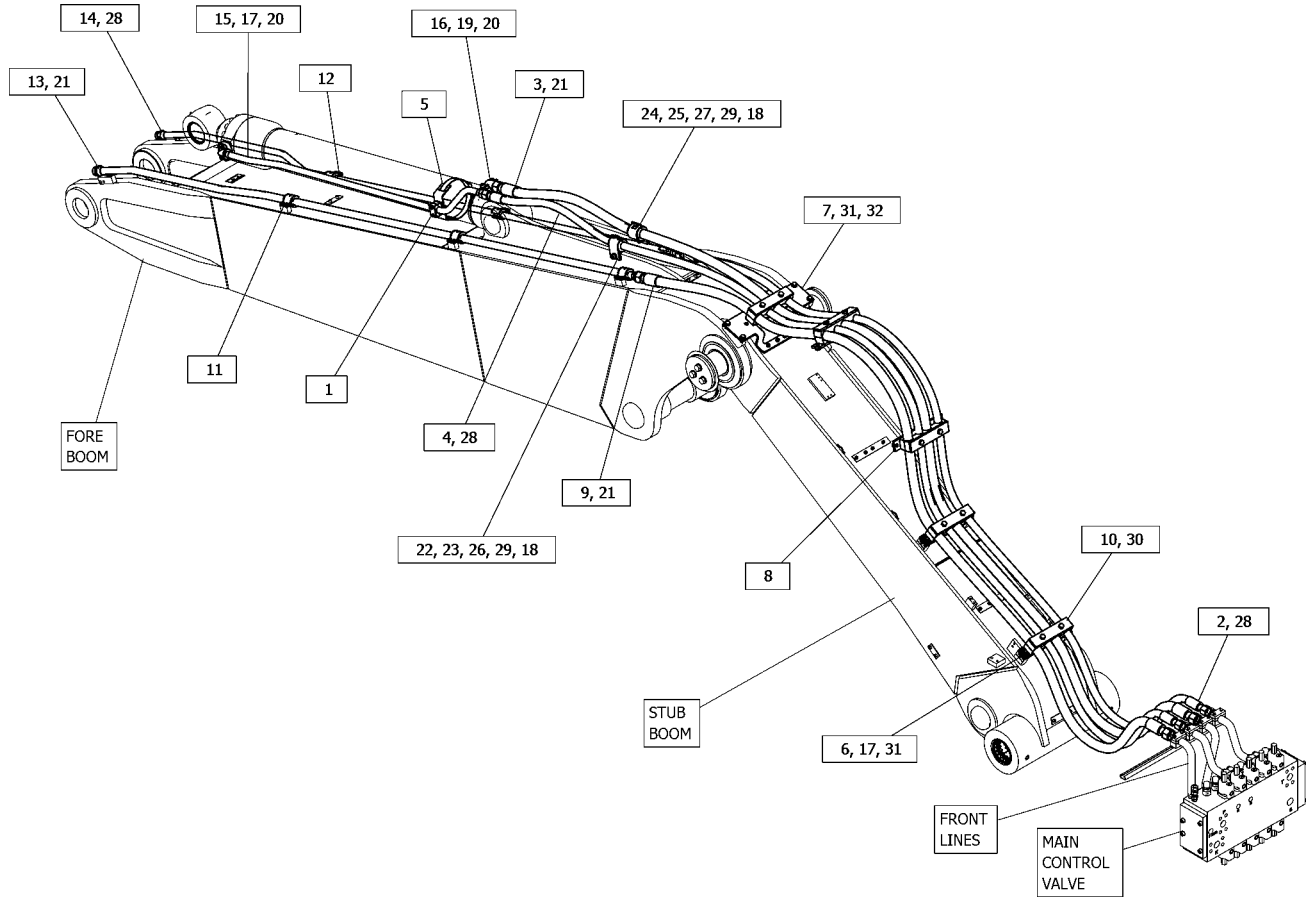

GRAPHIC #1 <END> g06270857

540-4003 LINES GP-BOOM–1-PIECE

S/N: CH91-UP
HIGH PRESSURE FUNCTION
PART OF 454-2118 VALVE & LINES AR
AN ATTACHMENT

SMCS-5057 **i07269792**

NOTE	REF NO	GRAPHIC REF	PART NUMBER	QTY	PART NAME 1 2 3 4 5 6 (PRODUCT LEVEL)	SEE PAGE
	1	1	**116-7286**	1	CLAMP-SINGLE	
I	2	1	**185-6798**	1	HOSE AS	
I	3	1	**185-6799**	1	HOSE AS	
	4	1	**187-5076**	1	CLAMP AS	
	5	1	*263-6333*	3	CLAMP GP-HYDRAULIC LINES	
					(EACH INCLUDES)	
		1	**263-5129**	2	CLAMP-TWIN	
		1	**263-6335**	2	GROMMET	
		1	**263-6336**	2	GROMMET	
	6	1	**329-2352**	1	TUBE AS	
	7	1	**329-2353**	1	TUBE AS	
	8	1	**329-2382**	1	TUBE AS	
	9	1	**329-2383**	1	TUBE AS	
	10	1	**540-4001**	1	TUBE AS	
M	11	1	**101-7398**	4	BOLT-SOCKET HEAD (M10X1.5X40-MM)	
M	12	1	**101-7404**	10	BOLT-SOCKET HEAD (M10X1.5X30-MM)	
M	13	1	**105-3478**	2	BOLT-SOCKET HEAD (M10X1.5X35-MM)	
	14	1	**151-8865**	1	ELBOW	
	15	1	**4J-5267**	2	SEAL-O-RING	
	16	1	**5K-9090**	5	SEAL-O-RING	
	17	1	**5P-7466**	1	CLIP (SLOT)	
	18	1	**5P-7467**	1	CLIP (TAB)	
	19	1	**5P-7468**	1	CLIP (SLOT)	
	20	1	**5P-7469**	1	CLIP (TAB)	
	21	1	**5P-8112**	1	GROMMET	
	22	1	**5P-8444**	1	GROMMET (37-MM ID)	
	23	1	**6V-9746**	5	SEAL-O-RING	
	24	1	**7X-7729**	2	WASHER (11X25X3-MM THK)	
I	25	1	**185-6804**	2	HOSE AS	
I	26	1	**185-6805**	2	HOSE AS	

I - REFER TO HYDRAULIC INFORMATION SYSTEM
M - METRIC PART

540-4003 **LINES GP-BOOM (**contd.**)** **i07269792**

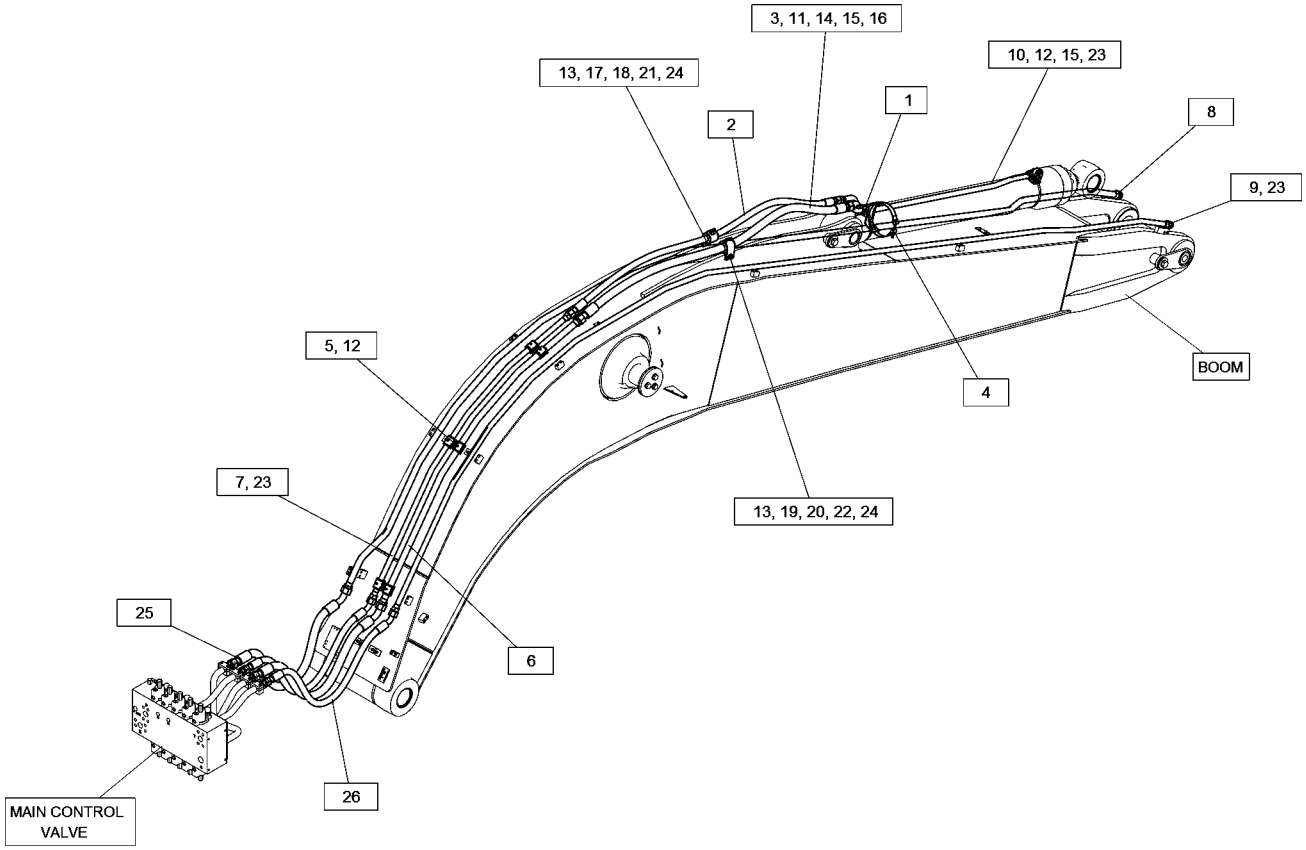

GRAPHIC #1 <END> g06270840

185-3379 LINES GP-BOOM CYLINDER

S/N: CH91-UP

PART OF 425-3925, 446-2745 VALVE & LINES AR

AN ATTACHMENT

SMCS-5057, 5456 **i05934687**

NOTE	REF NO	GRAPHIC REF	PART NUMBER	QTY	PART NAME 1 2 3 4 5 6 (PRODUCT LEVEL)	SEE PAGE
M	1	1	**101-7404**	4	BOLT-SOCKET HEAD (M10X1.5X30-MM)	
	2	1	**139-4016**	2	INSERT-RUBBER	
	3	1	**330-4681**	1	TUBE AS	
	4	1	**142-7425**	1	TUBE AS	
	5	1	**145-7713**	2	BLOCK	
CI	6	1	**247-8455**	1	HOSE AS	
CI	7	1	**271-2683**	1	HOSE AS	
I	8	1	**185-6809**	1	HOSE AS	
	9	1	**185-6810**	1	CLAMP AS	
	10	1	**187-5078**	1	CLAMP AS	
I	11	1	**212-6763**	1	HOSE AS	
I	12	1	**190-8532**	1	HOSE AS	
M	13	1	**8T-4184**	4	BOLT (M12X1.75X45-MM)	
	14	1	**288-3658**	1	CLAMP-SINGLE	
	15	1	**139-5751**	2	CLAMP-SINGLE	
	16	1	**140-7599**	1	CLAMP	
	17	1	*148-8327*	1	CONNECTOR AS	
		1	**3D-2824**	1	SEAL-O-RING	
		1	**6V-8637**	1	CONNECTOR	
		1	**6V-9746**	1	SEAL-O-RING	
	18	1	*148-8395*	3	PLUG AS	
					(EACH INCLUDES)	
		1	**3K-0360**	1	SEAL-O-RING	
		1	**9S-8005**	1	PLUG (3/4-16-THD)	
	19	1	*153-6237*	1	ELBOW AS	
		1	**3D-2824**	1	SEAL-O-RING	
		1	**6V-9004**	1	ELBOW	
		1	**6V-9746**	1	SEAL-O-RING	
C	20	1	**1P-3702**	2	SEAL-RECTANGULAR	
	21	1	**1P-3703**	2	SEAL-RECTANGULAR	
C	22	1	**4J-5267**	5	SEAL-O-RING	
	23	1	**5K-9090**	2	SEAL-O-RING	
	24	1	**6V-0400**	4	FLANGE-HALF	
M	25	1	**105-3477**	8	BOLT-SOCKET HEAD (M10X1.5X45-MM)	
C	26	1	**8T-4121**	8	WASHER-HARD (11X21X2.5-MM THK)	
CM	27	1	**105-3478**	8	BOLT-SOCKET HEAD (M10X1.5X35-MM)	
M	28	1	**8T-4185**	2	BOLT (M10X1.5X50-MM)	
	29	1	**8T-4223**	4	WASHER-HARD (13.5X25.5X3-MM THK)	
M	30	1	**8T-5005**	4	BOLT (M10X1.5X70-MM)	
C	31	1	**8T-9403**	4	FLANGE-HALF	
M	32	1	**101-7398**	8	BOLT-SOCKET HEAD (M10X1.5X40-MM)	
C	33	1	**151-8866**	2	ELBOW	
C	34	1	**6V-9746**	2	SEAL-O-RING	
M	35	1	**280-8912**	2	BOLT (M10X1.5X75-MM)	
	36	1	**266-0982**	1	GUARD	
	37	1	**7K-1181**	2	STRAP-CABLE	

185-3379 **LINES GP-BOOM CYLINDER** (contd.) **i05934687**

NOTE	REF NO	GRAPHIC REF	PART NUMBER	QTY	PART NAME 1 2 3 4 5 6 (PRODUCT LEVEL)	SEE PAGE

C - CHANGE FROM PREVIOUS TYPE
I - REFER TO HYDRAULIC INFORMATION SYSTEM
M - METRIC PART

185-3379 **LINES GP-BOOM CYLINDER (**contd.**)** **i05934687**

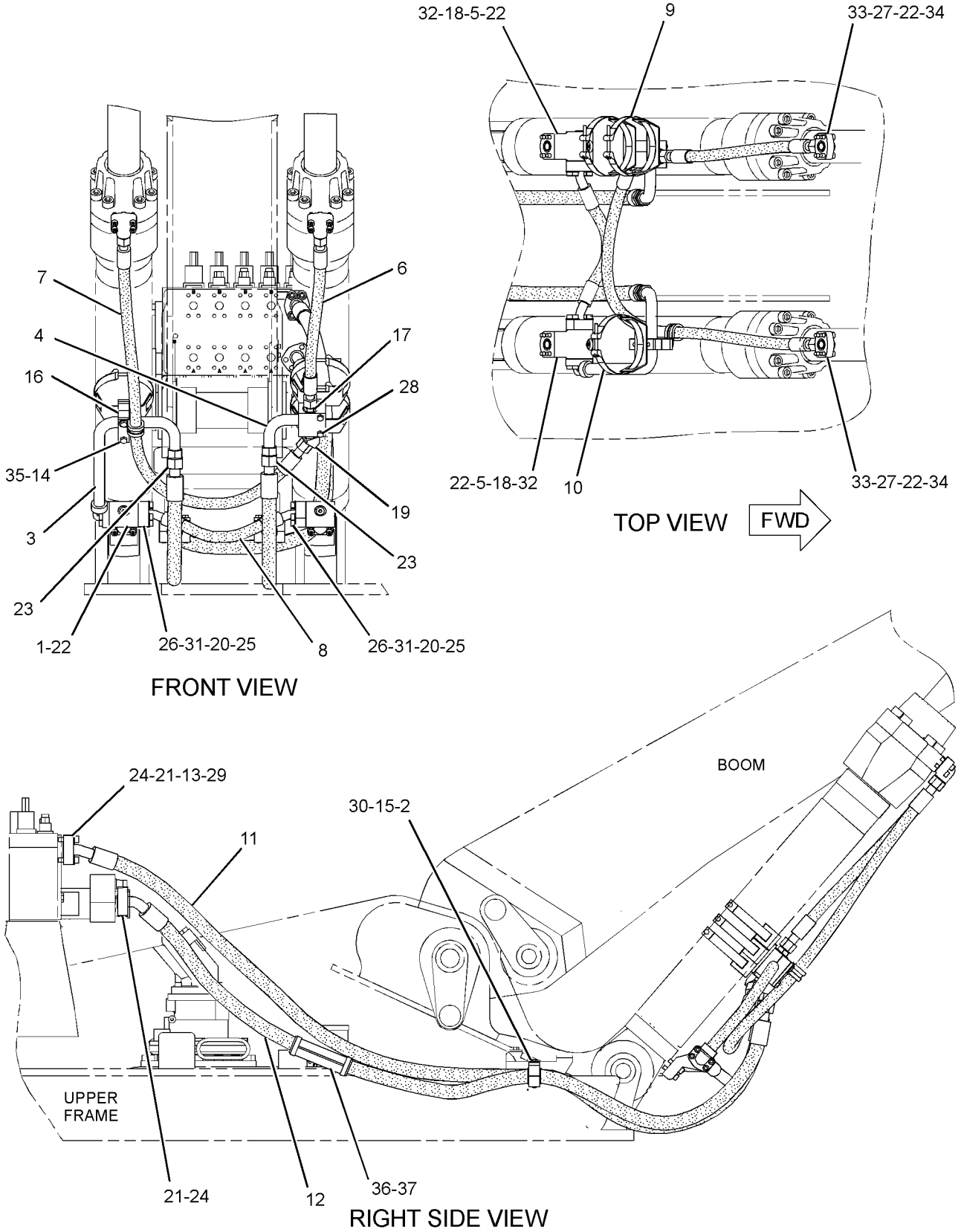

GRAPHIC #1 <END> g02416538

340-0396 LINES GP-CHECK VALVE—STICK CYLINDER

S/N: CH91-UP

AN ATTACHMENT

SMCS-5057, 5067 **i07449179**

NOTE	REF NO	GRAPHIC REF	PART NUMBER	QTY	PART NAME 1 2 3 4 5 6 (PRODUCT LEVEL)	SEE PAGE
	1	1	**5W-9857**	2	FLANGE-HALF	
M	2	1	**105-3478**	6	BOLT-SOCKET HEAD (M10X1.5X35-MM)	
	3	1	**116-7286**	1	CLAMP-SINGLE	
	4	1	**151-8865**	1	ELBOW	
I	5	1	**185-6798**	1	HOSE AS	
I	6	1	**185-6799**	1	HOSE AS	
	7	1	**187-5076**	1	CLAMP AS	
	8	1	*263-5618*	6	CLAMP AS (SINGLE)	
					(EACH INCLUDES)	
		1	**263-5133**	2	GROMMET	
	9	1	*263-6333*	3	CLAMP GP-HYDRAULIC LINES (TWIN SPIKE)	
					(EACH INCLUDES)	
		1	**263-6335**	2	GROMMET	
		1	**263-6336**	2	GROMMET	
	10	1	*263-7038*	6	CLAMP GP-HYDRAULIC LINES (SINGLE)	
					(EACH INCLUDES)	
		1	**263-6337**	2	GROMMET	
	11	1	**329-2352**	1	TUBE AS	
	12	1	**329-2353**	1	TUBE AS	
	13	1	**329-2382**	1	TUBE AS	
	14	1	**329-2383**	1	TUBE AS	
	15	1	*340-3050*	2	CLAMP GP-HYDRAULIC LINES (LOGGING)	
					(EACH INCLUDES)	
		1	**194-9389**	1	PLATE	
	16	1	**340-3060**	1	TUBE AS	
	17	1	**364-8088**	1	VALVE GP-CHECK (PILOT OPERATED) (STICK CYLINDER)	
		1	**4J-5267**	1	SEAL-O-RING	
	18	1	**386-1188**	1	VALVE GP-SHUTTLE (STICK CYLINDER) (STICK CYLINDER)	
		1	**3E-4298**	1	SEAL-O-RING	
		1	**161-6154**	1	SEAL-O-RING	
M	19	1	**101-7398**	8	BOLT-SOCKET HEAD (M10X1.5X40-MM)	
M	20	1	**101-7404**	30	BOLT-SOCKET HEAD (M10X1.5X30-MM)	
	21	1	*148-8336*	1	CONNECTOR AS	
		1	**3J-1907**	1	SEAL-O-RING	
		1	**6V-8397**	1	SEAL-O-RING	
		1	**6V-8636**	1	CONNECTOR	
	22	1	*148-8341*	1	CONNECTOR AS	
		1	**3D-2824**	1	SEAL-O-RING	
		1	**6V-8713**	1	CONNECTOR	
		1	**7J-9108**	1	SEAL-O-RING	
	23	1	*156-4282*	1	REDUCER AS	
		1	**6V-8397**	1	SEAL-O-RING	
		1	**6V-8938**	1	REDUCER	
	24	1	**4J-5267**	2	SEAL-O-RING	
	25	1	**5K-9090**	5	SEAL-O-RING	
	26	1	**5P-7466**	1	CLIP (SLOT)	
	27	1	**5P-7467**	1	CLIP (TAB)	

340-0396 **LINES GP-CHECK VALVE (**contd.**)** **i07449179**

NOTE	REF NO	GRAPHIC REF	PART NUMBER	QTY	PART NAME 1 2 3 4 5 6 (PRODUCT LEVEL)	SEE PAGE
	28	1	**5P-7468**	1	CLIP (SLOT)	
	29	1	**5P-7469**	1	CLIP (TAB)	
	30	1	**5P-8112**	1	GROMMET	
	31	1	**5P-8444**	1	GROMMET (37-MM ID)	
	32	1	**6V-9746**	5	SEAL-O-RING	
B	33	1	**7K-1181**	11	STRAP-CABLE	
M	34	1	**7X-2533**	4	BOLT (M6X1X35-MM)	
	35	1	**7X-7729**	2	WASHER (11X25X3-MM THK)	
	36	1	**9X-6581**	1	NUT-O-RING SEAL (1-14-THD)	
I	37	1	**185-6804**	2	HOSE AS	
I	38	1	**185-6805**	2	HOSE AS	
I	39	1	**201-7473**	2	HOSE AS	

B - USE AS REQUIRED
I - REFER TO HYDRAULIC INFORMATION SYSTEM
M - METRIC PART

340-0396 **LINES GP-CHECK VALVE (**contd.**)** **i07449179**

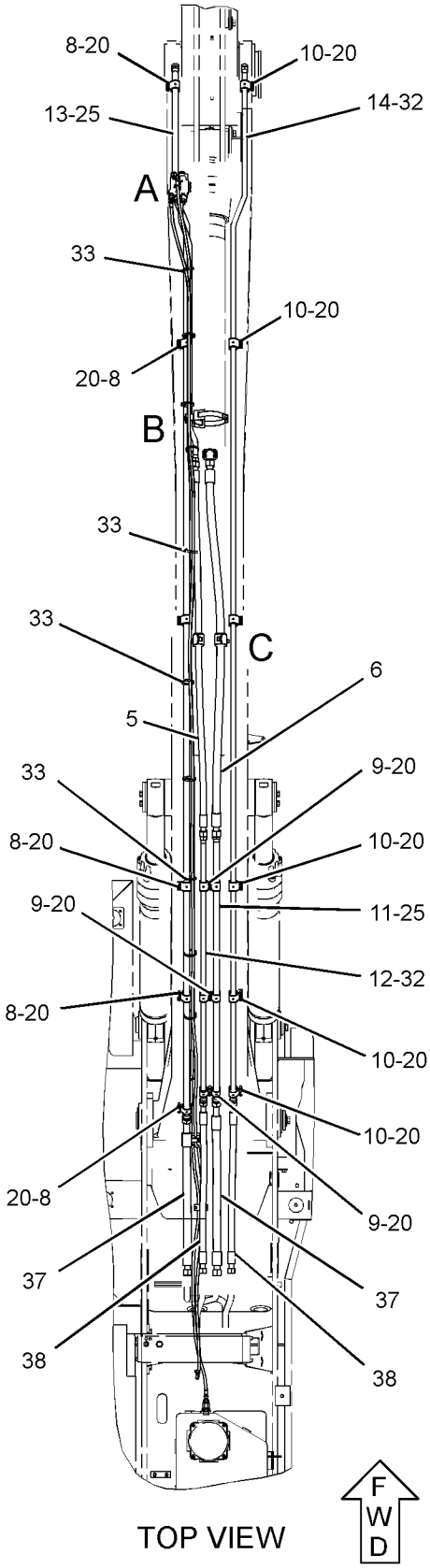

TOP VIEW

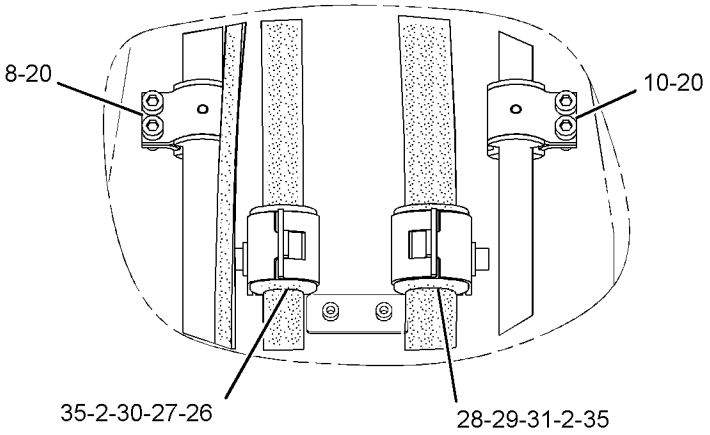

VIEW OF AREA C

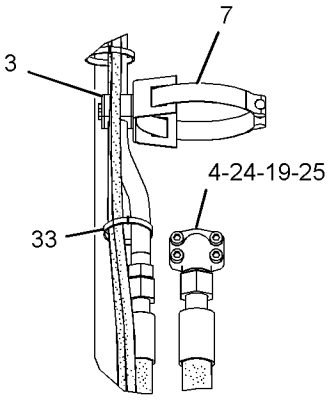

VIEW OF AREA B

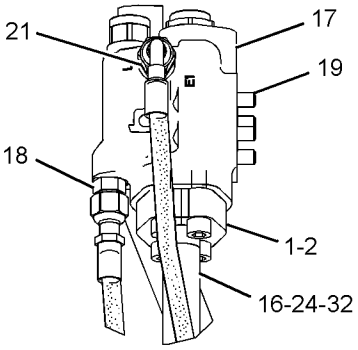

VIEW OF AREA A

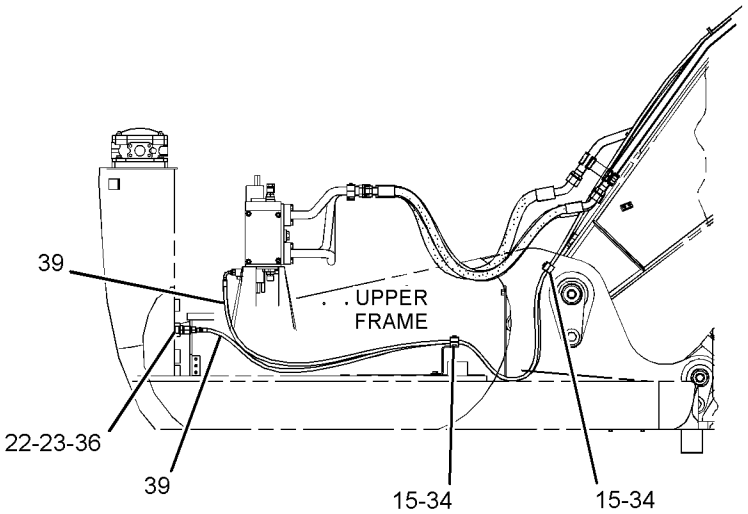

RIGHT SIDE VIEW

GRAPHIC #1 <END> g03114341

418-0024 LINES GP-CHECK VALVE—STICK CYLINDER, 1-PIECE BOOM

S/N: CH91-UP
HIGH PRESSURE FUNCTION
PART OF 454-2129 VALVE & LINES AR
AN ATTACHMENT

SMCS-5057, 5067 **i07449088**

NOTE	REF NO	GRAPHIC REF	PART NUMBER	QTY	PART NAME 1 2 3 4 5 6 (PRODUCT LEVEL)	SEE PAGE
	1	1	**5W-9857**	2	FLANGE-HALF	
	2	1	**116-7286**	1	CLAMP-SINGLE	
I	3	1	**185-6798**	1	HOSE AS	
I	4	1	**185-6799**	1	HOSE AS	
	5	1	**187-5076**	1	CLAMP AS	
	6	1	*263-6333*	3	CLAMP GP-HYDRAULIC LINES	
					(EACH INCLUDES)	
		1	**263-6335**	2	GROMMET	
		1	**263-6336**	2	GROMMET	
	7	1	**329-2352**	1	TUBE AS	
	8	1	**329-2353**	1	TUBE AS	
	9	1	**329-2382**	1	TUBE AS	
	10	1	**329-2383**	1	TUBE AS	
	11	1	*340-3050*	2	CLAMP GP-HYDRAULIC LINES	
					(EACH INCLUDES)	
		1	**194-9389**	1	PLATE	
	12	1	**340-3060**	1	TUBE AS	
	13	1	**364-8088**	1	VALVE GP-CHECK (PILOT OPERATED)	
		1	**4J-5267**	1	SEAL-O-RING	
	14	1	**386-1188**	1	VALVE GP-SHUTTLE (STICK CYLINDER) (STICK CYLINDER)	
		1	**3E-4298**	1	SEAL-O-RING	
		1	**161-6154**	1	SEAL-O-RING	
M	15	1	**101-7398**	8	BOLT-SOCKET HEAD (M10X1.5X40-MM)	
M	16	1	**101-7404**	6	BOLT-SOCKET HEAD (M10X1.5X30-MM)	
M	17	1	**105-3478**	6	BOLT-SOCKET HEAD (M10X1.5X35-MM)	
	18	1	*148-8336*	1	CONNECTOR AS	
		1	**3J-1907**	1	SEAL-O-RING	
		1	**6V-8397**	1	SEAL-O-RING	
		1	**6V-8636**	1	CONNECTOR	
	19	1	*148-8341*	1	CONNECTOR AS	
		1	**3D-2824**	1	SEAL-O-RING	
		1	**6V-8713**	1	CONNECTOR	
		1	**7J-9108**	1	SEAL-O-RING	
	20	1	**151-8865**	1	ELBOW	
	21	1	*156-4282*	1	REDUCER AS	
		1	**6V-8397**	1	SEAL-O-RING	
		1	**6V-8938**	1	REDUCER	
	22	1	**4J-5267**	2	SEAL-O-RING	
	23	1	**5K-9090**	5	SEAL-O-RING	
	24	1	**5P-7466**	1	CLIP (SLOT)	
	25	1	**5P-7467**	1	CLIP (TAB)	
	26	1	**5P-7468**	1	CLIP (SLOT)	
	27	1	**5P-7469**	1	CLIP (TAB)	
	28	1	**5P-8112**	1	GROMMET	
	29	1	**5P-8444**	1	GROMMET (37-MM ID)	

418-0024 **LINES GP-CHECK VALVE (**contd.**)** **i07449088**

NOTE	REF NO	GRAPHIC REF	PART NUMBER	QTY	PART NAME 1 2 3 4 5 6 (PRODUCT LEVEL)	SEE PAGE
	30	1	**6V-9746**	5	SEAL-O-RING	
B	31	1	**7K-1181**	11	STRAP-CABLE	
M	32	1	**7X-2533**	4	BOLT (M6X1X35-MM)	
	33	1	**7X-7729**	2	WASHER (11X25X3-MM THK)	
	34	1	**9X-6581**	1	NUT-O-RING SEAL (1-14-THD)	
I	35	1	**185-6804**	2	HOSE AS	
I	36	1	**185-6805**	2	HOSE AS	
I	37	1	**201-7473**	2	HOSE AS	

B - USE AS REQUIRED
I - REFER TO HYDRAULIC INFORMATION SYSTEM
M - METRIC PART

418-0024 **LINES GP-CHECK VALVE** (contd.) **i07449088**

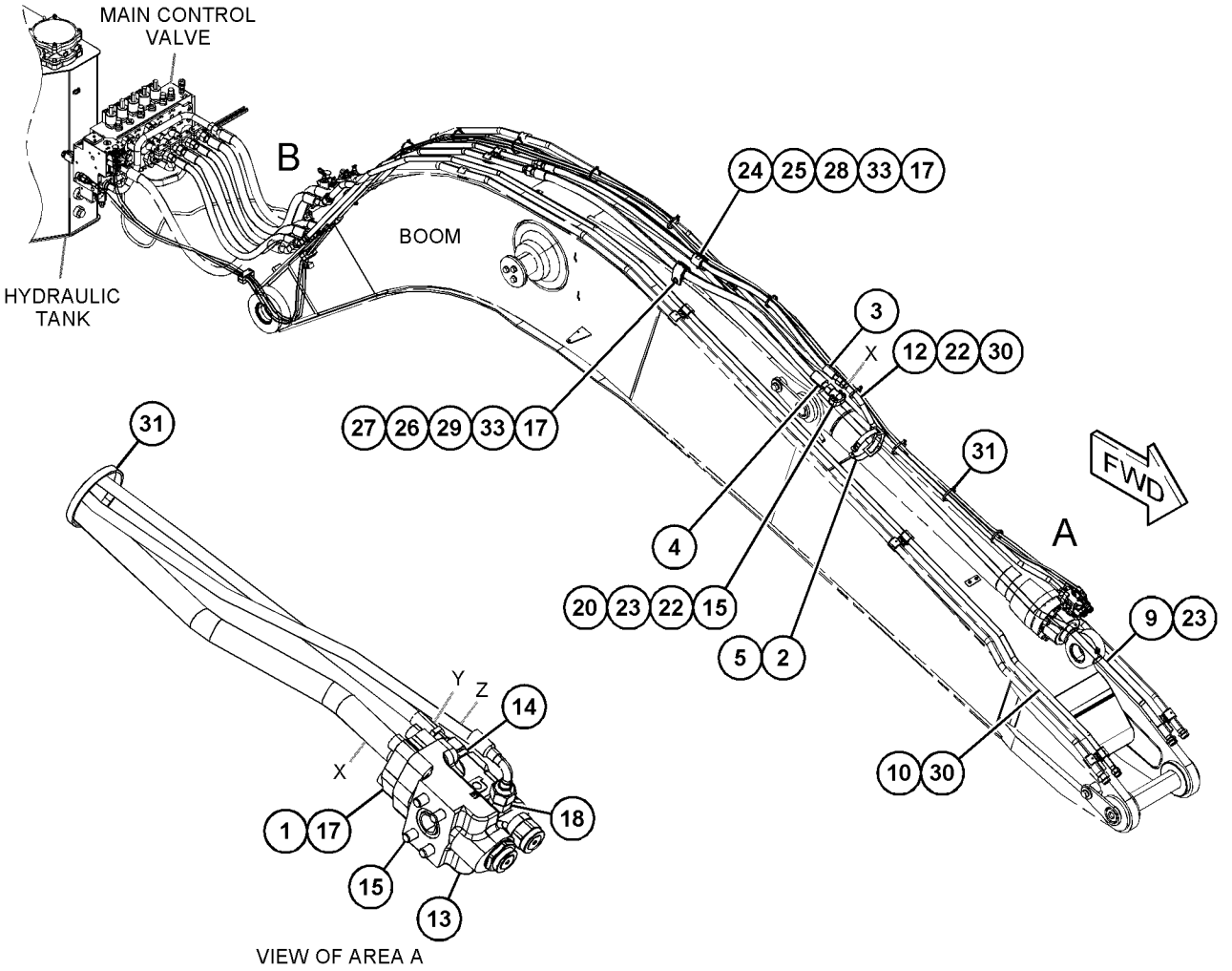

VIEW OF AREA A

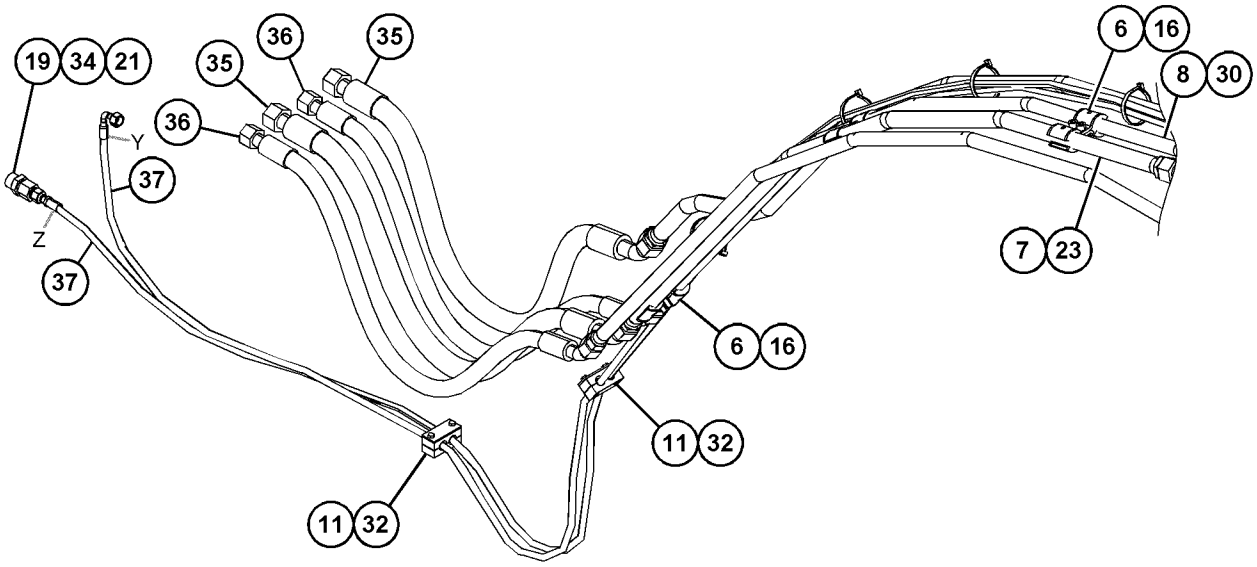

VIEW OF AREA B

GRAPHIC #1 <END> g03569506

418-0909 LINES GP-CHECK VALVE—STICK CYLINDER, VAR ADJ BOOM

S/N: CH91-UP

AN ATTACHMENT

SMCS-5057, 5067 **i06816226**

NOTE	REF NO	GRAPHIC REF	PART NUMBER	QTY	PART NAME 1 2 3 4 5 6 (PRODUCT LEVEL)	SEE PAGE
	1	1	**5W-9857**	2	FLANGE-HALF	
	2	1	**116-7286**	1	CLAMP-SINGLE	
I	3	1	**185-6791**	1	HOSE AS	
I	4	1	**185-6792**	1	HOSE AS	
I	5	1	**185-6793**	1	HOSE AS	
	6	1	**187-5076**	1	CLAMP AS	
	7	1	**187-5079**	2	PLATE AS	
	8	1	**189-2060**	1	PLATE AS	
	9	1	**189-2062**	2	PLATE AS	
I	10	1	**191-1641**	1	HOSE AS	
	11	1	*194-9391*	5	CLAMP GP-HYDRAULIC LINES	
					(EACH INCLUDES)	
		1	**187-5081**	1	SPACER (12.8X20X49-MM THK)	
		1	**189-2055**	1	PLATE	
		1	**194-9397**	2	CLAMP	
	12	1	*263-5618*	4	CLAMP AS (SINGLE)	
					(EACH INCLUDES)	
		1	**263-5132**	2	CLAMP	
		1	**263-5133**	2	GROMMET	
	13	1	*263-7038*	1	CLAMP GP-HYDRAULIC LINES	
		1	**263-5132**	2	CLAMP	
		1	**263-6337**	2	GROMMET	
	14	1	*263-7116*	3	CLAMP AS	
					(EACH INCLUDES)	
		1	**263-5130**	2	CLAMP-SINGLE	
		1	**263-6336**	2	GROMMET	
	15	1	**283-9146**	1	PLATE AS	
	16	1	**283-9147**	1	PLATE AS	
	17	1	**329-2373**	1	TUBE AS	
	18	1	**329-2374**	1	TUBE AS	
	19	1	*340-3050*	6	CLAMP GP-HYDRAULIC LINES	
					(EACH INCLUDES)	
		1	**194-9389**	1	PLATE	
		1	**340-3049**	2	CLAMP	
	20	1	**340-3060**	1	TUBE AS	
	21	1	**364-8088**	1	VALVE GP-CHECK (PILOT OPERATED)	
		1	**4J-5267**	1	SEAL-O-RING	
	22	1	**386-1188**	1	VALVE GP-SHUTTLE (STICK CYLINDER) (STICK CYLINDER)	
		1	**3E-4298**	1	SEAL-O-RING	
		1	**161-6154**	1	SEAL-O-RING	
M	23	1	**101-7398**	8	BOLT-SOCKET HEAD (M10X1.5X40-MM)	
M	24	1	**101-7404**	24	BOLT-SOCKET HEAD (M10X1.5X30-MM)	
M	25	1	**105-3478**	6	BOLT-SOCKET HEAD (M10X1.5X35-MM)	
	26	1	*148-8336*	1	CONNECTOR AS	
		1	**3J-1907**	1	SEAL-O-RING	
		1	**6V-8397**	1	SEAL-O-RING	
		1	**6V-8636**	1	CONNECTOR	

418-0909 **LINES GP-CHECK VALVE (**contd.**)** **i06816226**

NOTE	REF NO	GRAPHIC REF	PART NUMBER	QTY	PART NAME 1 2 3 4 5 6 (PRODUCT LEVEL)	SEE PAGE
	27	1	*148-8341*	1	CONNECTOR AS	
		1	**3D-2824**	1	SEAL-O-RING	
		1	**6V-8713**	1	CONNECTOR	
		1	**7J-9108**	1	SEAL-O-RING	
	28	1	**151-8865**	1	ELBOW	
	29	1	*156-4282*	1	REDUCER AS	
		1	**6V-8397**	1	SEAL-O-RING	
		1	**6V-8938**	1	REDUCER	
	30	1	**4J-5267**	2	SEAL-O-RING	
	31	1	**5K-9090**	3	SEAL-O-RING	
	32	1	**5P-7466**	1	CLIP (SLOT)	
	33	1	**5P-7467**	1	CLIP (TAB)	
	34	1	**5P-7468**	1	CLIP (SLOT)	
	35	1	**5P-7469**	1	CLIP (TAB)	
	36	1	**5P-8112**	1	GROMMET	
	37	1	**5P-8444**	1	GROMMET (37-MM ID)	
	38	1	**6V-9746**	3	SEAL-O-RING	
B	39	1	**7K-1181**	6	STRAP-CABLE	
M	40	1	**7X-2533**	12	BOLT (M6X1X35-MM)	
	41	1	**7X-7729**	2	WASHER (11X25X3-MM THK)	
M	42	1	**7Y-7992**	10	BOLT (M12X1.75X75-MM)	
	43	1	**8T-4121**	12	WASHER-HARD (11X21X2.5-MM THK)	
M	44	1	**8T-4136**	4	BOLT (M10X1.5X25-MM)	
	45	1	**9X-6581**	1	NUT-O-RING SEAL (1-14-THD)	
I	46	1	**190-8544**	2	HOSE AS	

B - USE AS REQUIRED
I - REFER TO HYDRAULIC INFORMATION SYSTEM
M - METRIC PART

418-0909 **LINES GP-CHECK VALVE (**contd.**)** **i06816226**

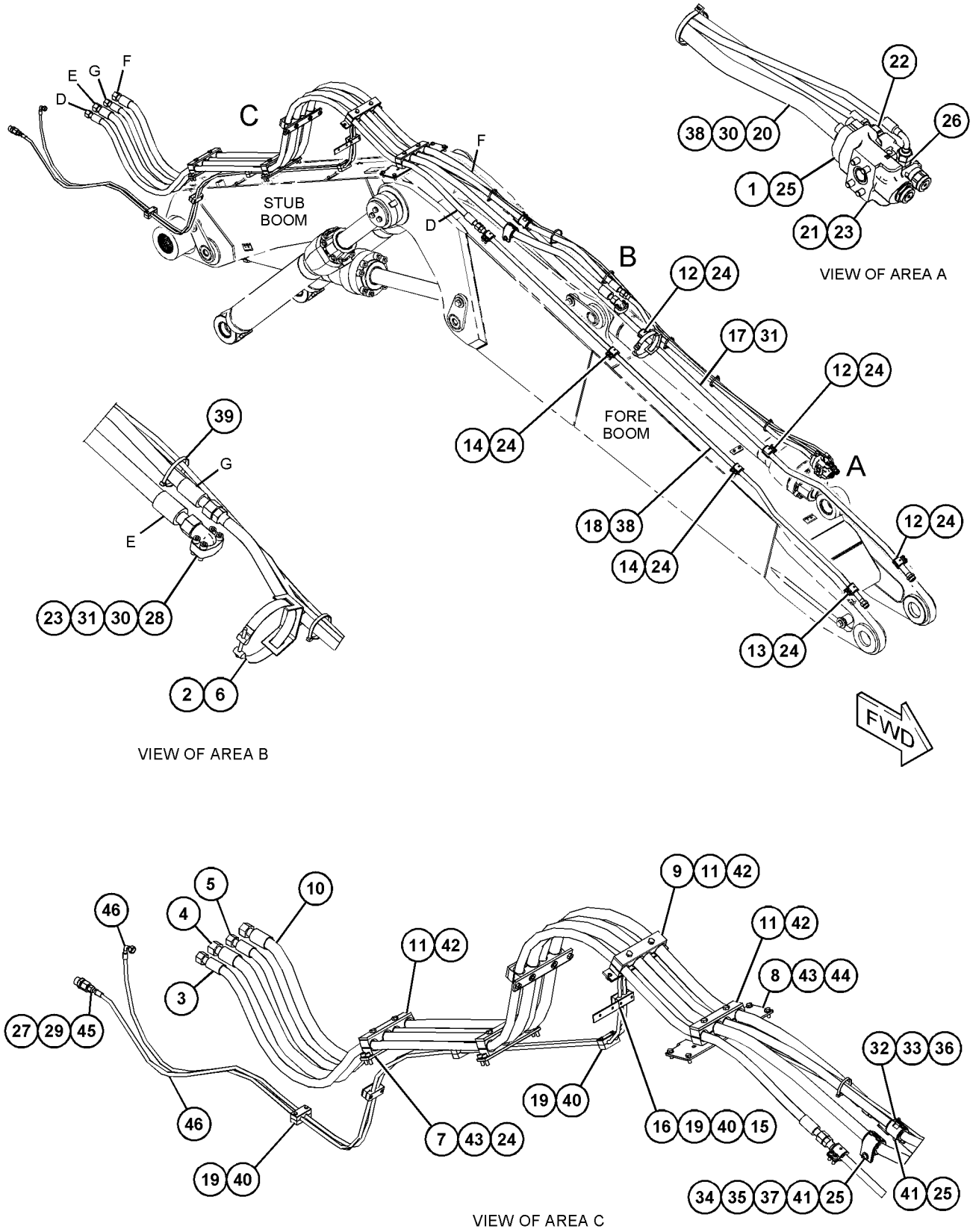

GRAPHIC #1 <END> g03570500

418-0912 LINES GP-CHECK VALVE—STICK CYLINDER, VAR ADJ BOOM

S/N: CH91-UP
HIGH PRESSURE FUNCTION
PART OF 454-2126 VALVE & LINES AR
AN ATTACHMENT

SMCS-5057, 5067 **i07449139**

NOTE	REF NO	GRAPHIC REF	PART NUMBER	QTY	PART NAME 1 2 3 4 5 6 (PRODUCT LEVEL)	SEE PAGE
	1	1	**5W-9857**	2	FLANGE-HALF	
	2	1	**116-7286**	1	CLAMP-SINGLE	
I	3	1	**185-6791**	1	HOSE AS	
I	4	1	**185-6792**	1	HOSE AS	
I	5	1	**185-6793**	1	HOSE AS	
	6	1	**187-5076**	1	CLAMP AS	
	7	1	**187-5079**	2	PLATE AS	
	8	1	**189-2060**	1	PLATE AS	
	9	1	**189-2062**	2	PLATE AS	
I	10	1	**191-1641**	1	HOSE AS	
	11	1	*194-9391*	5	CLAMP GP-HYDRAULIC LINES	
					(EACH INCLUDES)	
		1	**187-5081**	2	SPACER (12.8X20X49-MM THK)	
		1	**189-2055**	1	PLATE	
		1	**194-9397**	2	CLAMP	
	12	1	*263-5618*	3	CLAMP AS (SINGLE)	
					(EACH INCLUDES)	
		1	**263-5132**	2	CLAMP	
		1	**263-5133**	2	GROMMET	
	13	1	*263-7116*	3	CLAMP AS	
					(EACH INCLUDES)	
		1	**263-5130**	2	CLAMP-SINGLE	
		1	**263-6336**	2	GROMMET	
	14	1	**283-9146**	1	PLATE AS	
	15	1	**283-9147**	1	PLATE AS	
	16	1	**329-2373**	1	TUBE AS	
	17	1	**329-2374**	1	TUBE AS	
	18	1	*340-3050*	6	CLAMP GP-HYDRAULIC LINES	
					(EACH INCLUDES)	
		1	**194-9389**	1	PLATE	
		1	**340-3049**	2	CLAMP	
	19	1	**340-3060**	1	TUBE AS	
	20	1	**364-8088**	1	VALVE GP-CHECK (PILOT OPERATED)	
		1	**4J-5267**	1	SEAL-O-RING	
	21	1	**386-1188**	1	VALVE GP-SHUTTLE (STICK CYLINDER) (STICK CYLINDER)	
		1	**3E-4298**	1	SEAL-O-RING	
		1	**161-6154**	1	SEAL-O-RING	
M	22	1	**101-7398**	8	BOLT-SOCKET HEAD (M10X1.5X40-MM)	
M	23	1	**101-7404**	8	BOLT-SOCKET HEAD (M10X1.5X30-MM)	
M	24	1	**105-3478**	6	BOLT-SOCKET HEAD (M10X1.5X35-MM)	
	25	1	*148-8336*	1	CONNECTOR AS	
		1	**3J-1907**	1	SEAL-O-RING	
		1	**6V-8397**	1	SEAL-O-RING	
		1	**6V-8636**	1	CONNECTOR	
	26	1	*148-8341*	1	CONNECTOR AS	

418-0912 **LINES GP-CHECK VALVE (**contd.**)** **i07449139**

NOTE	REF NO	GRAPHIC REF	PART NUMBER	QTY	PART NAME 1 2 3 4 5 6 (PRODUCT LEVEL)	SEE PAGE
		1	**3D-2824**	1	SEAL-O-RING	
		1	**6V-8713**	1	CONNECTOR	
		1	**7J-9108**	1	SEAL-O-RING	
	27	1	**151-8865**	1	ELBOW	
	28	1	*156-4282*	1	REDUCER AS	
		1	**6V-8397**	1	SEAL-O-RING	
		1	**6V-8938**	1	REDUCER	
	29	1	**4J-5267**	2	SEAL-O-RING	
	30	1	**5K-9090**	3	SEAL-O-RING	
	31	1	**5P-7466**	1	CLIP (SLOT)	
	32	1	**5P-7467**	1	CLIP (TAB)	
	33	1	**5P-7468**	1	CLIP (SLOT)	
	34	1	**5P-7469**	1	CLIP (TAB)	
	35	1	**5P-8112**	1	GROMMET	
	36	1	**5P-8444**	1	GROMMET (37-MM ID)	
	37	1	**6V-9746**	3	SEAL-O-RING	
B	38	1	**7K-1181**	6	STRAP-CABLE	
M	39	1	**7X-2533**	12	BOLT (M6X1X35-MM)	
	40	1	**7X-7729**	2	WASHER (11X25X3-MM THK)	
M	41	1	**7Y-7992**	10	BOLT (M12X1.75X75-MM)	
	42	1	**8T-4121**	12	WASHER-HARD (11X21X2.5-MM THK)	
M	43	1	**8T-4136**	4	BOLT (M10X1.5X25-MM)	
	44	1	**9X-6581**	1	NUT-O-RING SEAL (1-14-THD)	
I	45	1	**190-8544**	2	HOSE AS	

B - USE AS REQUIRED
I - REFER TO HYDRAULIC INFORMATION SYSTEM
M - METRIC PART

418-0912 **LINES GP-CHECK VALVE (**contd.**)** **i07449139**

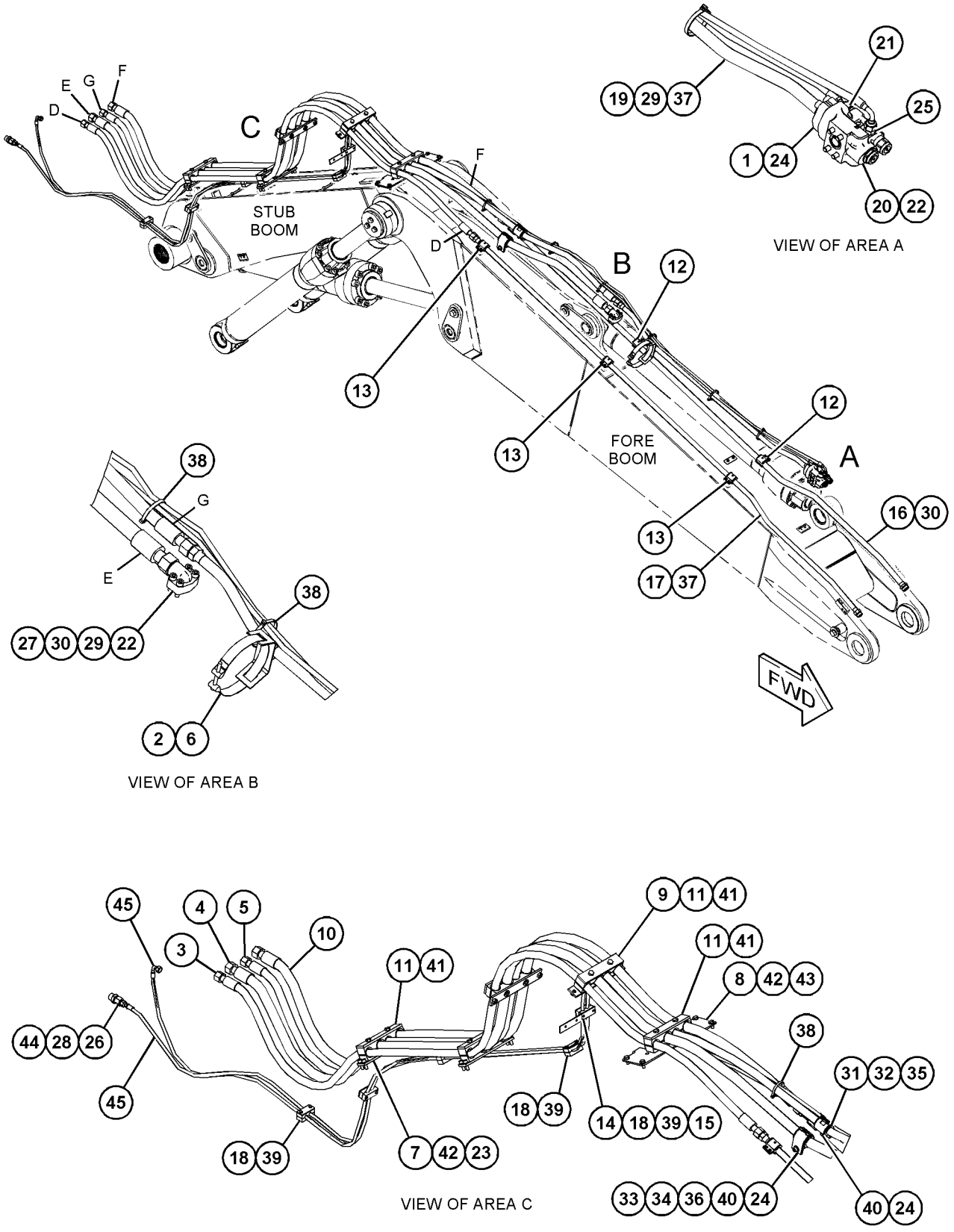

GRAPHIC #1 <END> g03569818

540-3995 LINES GP-CHECK VALVE—STICK CYLINDER, 1-PIECE BOOM

S/N: CH91-UP

AN ATTACHMENT

SMCS-5057, 5067 **i07833398**

NOTE	REF NO	GRAPHIC REF	PART NUMBER	QTY	PART NAME 1 2 3 4 5 6 (PRODUCT LEVEL)	SEE PAGE
	1	1	**5W-9857**	2	FLANGE-HALF	
M	2	1	**105-3478**	6	BOLT-SOCKET HEAD (M10X1.5X35-MM)	
	3	1	**116-7286**	1	CLAMP-SINGLE	
	4	1	**151-8865**	1	ELBOW	
I	5	1	**185-6798**	1	HOSE AS	
I	6	1	**185-6799**	1	HOSE AS	
	7	1	**187-5076**	1	CLAMP AS	
	8	1	**263-5618**	6	CLAMP AS (SINGLE)	
					(EACH INCLUDES)	
		1	**263-5133**	2	GROMMET	
	9	1	*263-6333*	3	CLAMP GP-HYDRAULIC LINES (TWIN SPIKE)	
					(EACH INCLUDES)	
		1	**263-5129**	2	CLAMP-TWIN	
		1	**263-6335**	2	GROMMET	
		1	**263-6336**	2	GROMMET	
	10	1	*263-7038*	6	CLAMP GP-HYDRAULIC LINES (SINGLE)	
					(EACH INCLUDES)	
		1	**263-5132**	2	CLAMP	
		1	**263-6337**	2	GROMMET	
	11	1	**329-2352**	1	TUBE AS	
	12	1	**329-2353**	1	TUBE AS	
	13	1	**329-2382**	1	TUBE AS	
	14	1	**329-2383**	1	TUBE AS	
	15	1	*340-3050*	2	CLAMP GP-HYDRAULIC LINES (LOGGING)	
					(EACH INCLUDES)	
		1	**194-9389**	1	PLATE	
		1	**340-3049**	2	CLAMP	
	16	1	**364-8088**	1	VALVE GP-CHECK (PILOT OPERATED)	
		1	**4J-5267**	1	SEAL-O-RING	
	17	1	**386-1188**	1	VALVE GP-SHUTTLE (STICK CYLINDER)	
		1	**3E-4298**	1	SEAL-O-RING	
		1	**161-6154**	1	SEAL-O-RING	
	18	1	**539-2823**	1	TUBE AS	
M	19	1	**101-7398**	8	BOLT-SOCKET HEAD (M10X1.5X40-MM)	
M	20	1	**101-7404**	30	BOLT-SOCKET HEAD (M10X1.5X30-MM)	
	21	1	*148-8336*	1	CONNECTOR AS	
		1	**3J-1907**	1	SEAL-O-RING	
		1	**6V-8397**	1	SEAL-O-RING	
		1	**6V-8636**	1	CONNECTOR	
	22	1	*148-8341*	1	CONNECTOR AS	
		1	**3D-2824**	1	SEAL-O-RING	
		1	**6V-8713**	1	CONNECTOR	
		1	**7J-9108**	1	SEAL-O-RING	
	23	1	*156-4282*	1	REDUCER AS	
		1	**6V-8397**	1	SEAL-O-RING	
		1	**6V-8938**	1	REDUCER	
	24	1	**4J-5267**	2	SEAL-O-RING	
	25	1	**5K-9090**	5	SEAL-O-RING	

540-3995 **LINES GP-CHECK VALVE** (contd.) **i07833398**

NOTE	REF NO	GRAPHIC REF	PART NUMBER	QTY	PART NAME 1 2 3 4 5 6 (PRODUCT LEVEL)	SEE PAGE
	26	1	**5P-7466**	1	CLIP (SLOT)	
	27	1	**5P-7467**	1	CLIP (TAB)	
	28	1	**5P-7468**	1	CLIP (SLOT)	
	29	1	**5P-7469**	1	CLIP (TAB)	
	30	1	**5P-8112**	1	GROMMET	
	31	1	**5P-8444**	1	GROMMET (37-MM ID)	
	32	1	**6V-9746**	5	SEAL-O-RING	
B	33	1	**7K-1181**	11	STRAP-CABLE	
M	34	1	**7X-2533**	4	BOLT (M6X1X35-MM)	
	35	1	**7X-7729**	2	WASHER (11X25X3-MM THK)	
	36	1	**9X-6581**	1	NUT-O-RING SEAL (1-14-THD)	
I	37	1	**185-6804**	2	HOSE AS	
I	38	1	**185-6805**	2	HOSE AS	
I	39	1	**201-7473**	2	HOSE AS	

B - USE AS REQUIRED
I - REFER TO HYDRAULIC INFORMATION SYSTEM
M - METRIC PART

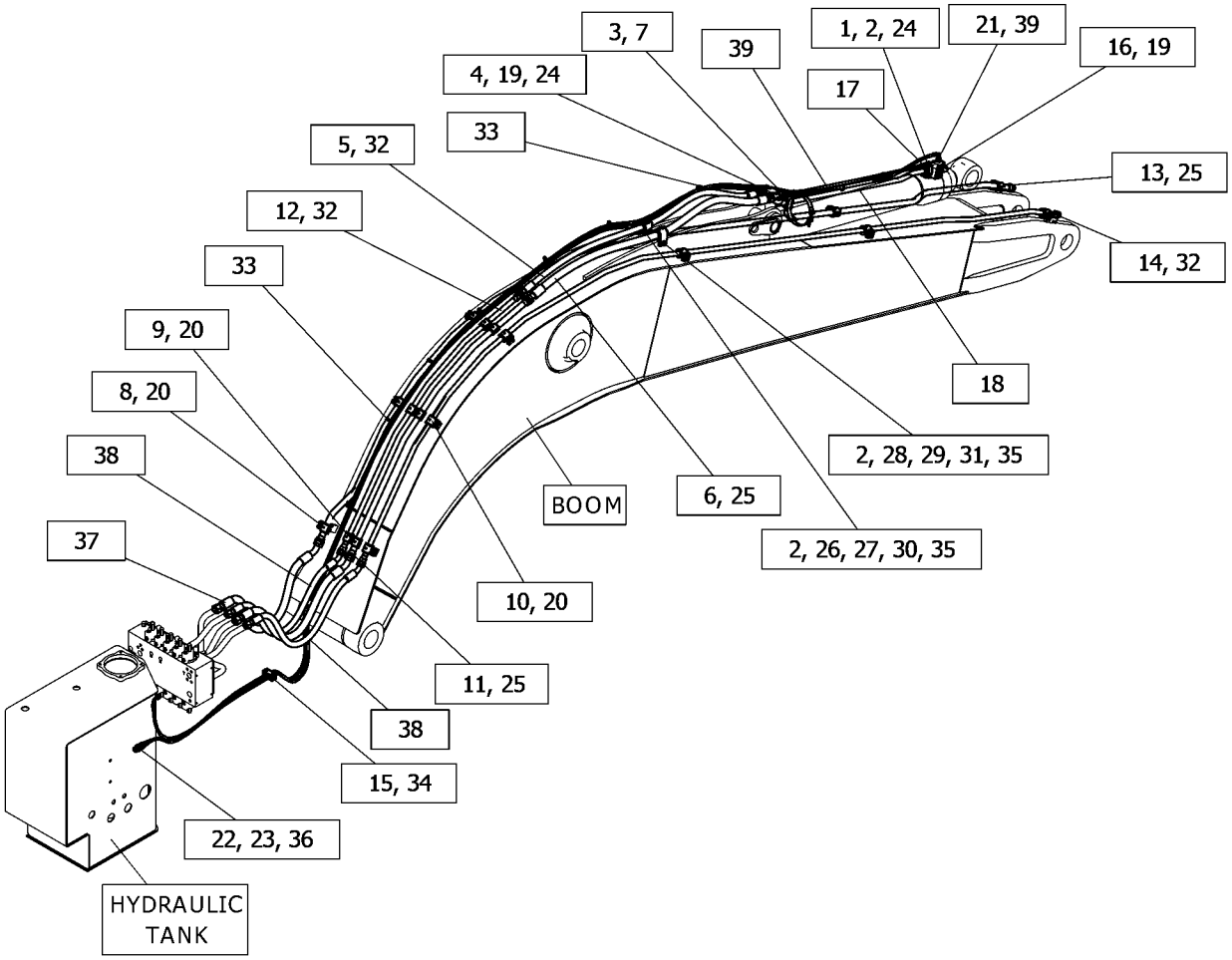

GRAPHIC #1 <END> g06437132

540-3998 LINES GP-CHECK VALVE—STICK CYLINDER, VAR ADJ BOOM

S/N: CH91-UP

AN ATTACHMENT

SMCS-5057, 5067 **i07833397**

NOTE	REF NO	GRAPHIC REF	PART NUMBER	QTY	PART NAME 1 2 3 4 5 6 (PRODUCT LEVEL)	SEE PAGE
	1	1	**5W-9857**	2	FLANGE-HALF	
	2	1	**116-7286**	1	CLAMP-SINGLE	
I	3	1	**185-6791**	1	HOSE AS	
I	4	1	**185-6792**	1	HOSE AS	
I	5	1	**185-6793**	1	HOSE AS	
	6	1	**187-5076**	1	CLAMP AS	
	7	1	**187-5079**	2	PLATE AS	
	8	1	**189-2060**	1	PLATE AS	
	9	1	**189-2062**	2	PLATE AS	
I	10	1	**191-1641**	1	HOSE AS	
	11	1	*194-9391*	5	CLAMP GP-HYDRAULIC LINES	
					(EACH INCLUDES)	
		1	**187-5081**	2	SPACER (12.8X20X49-MM THK)	
		1	**189-2055**	1	PLATE	
		1	**194-9397**	2	CLAMP	
	12	1	*263-5618*	4	CLAMP AS (SINGLE)	
					(EACH INCLUDES)	
		1	**263-5132**	2	CLAMP	
		1	**263-5133**	2	GROMMET	
	13	1	*263-7038*	1	CLAMP GP-HYDRAULIC LINES	
		1	**263-5132**	2	CLAMP	
		1	**263-6337**	2	GROMMET	
	14	1	*263-7116*	3	CLAMP AS	
					(EACH INCLUDES)	
		1	**263-5130**	2	CLAMP-SINGLE	
		1	**263-6336**	2	GROMMET	
	15	1	**283-9146**	1	PLATE AS	
	16	1	**283-9147**	1	PLATE AS	
	17	1	**329-2373**	1	TUBE AS	
	18	1	**329-2374**	1	TUBE AS	
	19	1	*340-3050*	6	CLAMP GP-HYDRAULIC LINES	
					(EACH INCLUDES)	
		1	**194-9389**	1	PLATE	
		1	**340-3049**	2	CLAMP	
	20	1	**539-2823**	1	TUBE AS	
	21	1	**364-8088**	1	VALVE GP-CHECK (PILOT OPERATED)	
		1	**4J-5267**	1	SEAL-O-RING	
	22	1	**386-1188**	1	VALVE GP-SHUTTLE (STICK CYLINDER) (STICK CYLINDER)	
		1	**3E-4298**	1	SEAL-O-RING	
		1	**161-6154**	1	SEAL-O-RING	
M	23	1	**101-7398**	8	BOLT-SOCKET HEAD (M10X1.5X40-MM)	
M	24	1	**101-7404**	24	BOLT-SOCKET HEAD (M10X1.5X30-MM)	
M	25	1	**105-3478**	6	BOLT-SOCKET HEAD (M10X1.5X35-MM)	
	26	1	*148-8336*	1	CONNECTOR AS	
		1	**3J-1907**	1	SEAL-O-RING	
		1	**6V-8397**	1	SEAL-O-RING	
		1	**6V-8636**	1	CONNECTOR	

540-3998 **LINES GP-CHECK VALVE (**contd.**)** **i07833397**

NOTE	REF NO	GRAPHIC REF	PART NUMBER	QTY	PART NAME 1 2 3 4 5 6 (PRODUCT LEVEL)	SEE PAGE
	27	1	*148-8341*	1	CONNECTOR AS	
		1	**3D-2824**	1	SEAL-O-RING	
		1	**6V-8713**	1	CONNECTOR	
		1	**7J-9108**	1	SEAL-O-RING	
	28	1	**151-8865**	1	ELBOW	
	29	1	*156-4282*	1	REDUCER AS	
		1	**6V-8397**	1	SEAL-O-RING	
		1	**6V-8938**	1	REDUCER	
	30	1	**4J-5267**	2	SEAL-O-RING	
	31	1	**5K-9090**	3	SEAL-O-RING	
	32	1	**5P-7466**	1	CLIP (SLOT)	
	33	1	**5P-7467**	1	CLIP (TAB)	
	34	1	**5P-7468**	1	CLIP (SLOT)	
	35	1	**5P-7469**	1	CLIP (TAB)	
	36	1	**5P-8112**	1	GROMMET	
	37	1	**5P-8444**	1	GROMMET (37-MM ID)	
	38	1	**6V-9746**	3	SEAL-O-RING	
B	39	1	**7K-1181**	6	STRAP-CABLE	
M	40	1	**7X-2533**	12	BOLT (M6X1X35-MM)	
	41	1	**7X-7729**	2	WASHER (11X25X3-MM THK)	
M	42	1	**7Y-7992**	10	BOLT (M12X1.75X75-MM)	
	43	1	**8T-4121**	12	WASHER-HARD (11X21X2.5-MM THK)	
M	44	1	**8T-4136**	4	BOLT (M10X1.5X25-MM)	
	45	1	**9X-6581**	1	NUT-O-RING SEAL (1-14-THD)	
I	46	1	**190-8544**	2	HOSE AS	

B - USE AS REQUIRED
I - REFER TO HYDRAULIC INFORMATION SYSTEM
M - METRIC PART

540-3998 **LINES GP-CHECK VALVE (**contd.**)** **i07833397**

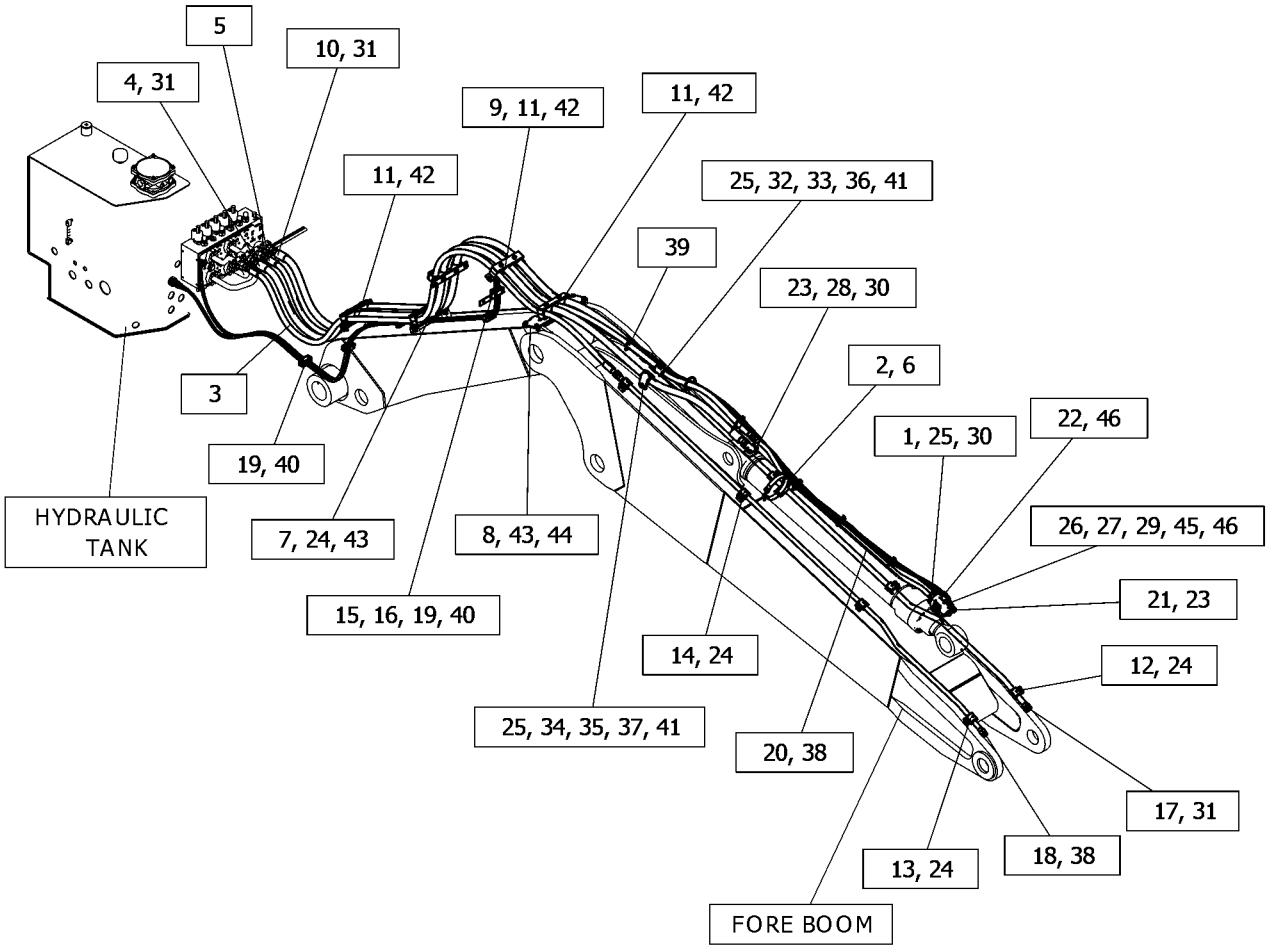

GRAPHIC #1 <END> g06436592

540-4004 LINES GP-CHECK VALVE—1-PIECE, HIGH PRESSURE FLOW

S/N: CH91-UP
PART OF 454-2129 VALVE & LINES AR
AN ATTACHMENT

SMCS-5057, 5067 **i07269812**

NOTE	REF NO	GRAPHIC REF	PART NUMBER	QTY	PART NAME 1 2 3 4 5 6 (PRODUCT LEVEL)	SEE PAGE
	1	1	**5W-9857**	2	FLANGE-HALF	
	2	1	**116-7286**	1	CLAMP-SINGLE	
I	3	1	**185-6798**	1	HOSE AS	
I	4	1	**185-6799**	1	HOSE AS	
	5	1	**187-5076**	1	CLAMP AS	
	6	1	*263-6333*	3	CLAMP GP-HYDRAULIC LINES (TWIN SPIKE)	
					(EACH INCLUDES)	
		1	**263-5129**	2	CLAMP-TWIN	
		1	**263-6335**	2	GROMMET	
		1	**263-6336**	2	GROMMET	
	7	1	**329-2352**	1	TUBE AS	
	8	1	**329-2353**	1	TUBE AS	
	9	1	**329-2382**	1	TUBE AS	
	10	1	**329-2383**	1	TUBE AS	
	11	1	*340-3050*	2	CLAMP GP-HYDRAULIC LINES (LOGGING)	
					(EACH INCLUDES)	
		1	**194-9389**	1	PLATE	
		1	**340-3049**	2	CLAMP	
	12	1	**364-8088**	1	VALVE GP-CHECK (PILOT OPERATED)	
		1	**4J-5267**	1	SEAL-O-RING	
	13	1	**386-1188**	1	VALVE GP-SHUTTLE (STICK CYLINDER) (STICK CYLINDER)	
		1	**3E-4298**	1	SEAL-O-RING	
		1	**161-6154**	1	SEAL-O-RING	
	14	1	**539-2823**	1	TUBE AS	
M	15	1	**101-7398**	8	BOLT-SOCKET HEAD (M10X1.5X40-MM)	
M	16	1	**101-7404**	6	BOLT-SOCKET HEAD (M10X1.5X30-MM)	
M	17	1	**105-3478**	6	BOLT-SOCKET HEAD (M10X1.5X35-MM)	
	18	1	*148-8336*	1	CONNECTOR AS	
		1	**3J-1907**	1	SEAL-O-RING	
		1	**6V-8397**	1	SEAL-O-RING	
		1	**6V-8636**	1	CONNECTOR	
	19	1	*148-8341*	1	CONNECTOR AS	
		1	**3D-2824**	1	SEAL-O-RING	
		1	**6V-8713**	1	CONNECTOR	
		1	**7J-9108**	1	SEAL-O-RING	
	20	1	**151-8865**	1	ELBOW	
	21	1	*156-4282*	1	REDUCER AS	
		1	**6V-8397**	1	SEAL-O-RING	
		1	**6V-8938**	1	REDUCER	
	22	1	**4J-5267**	2	SEAL-O-RING	
	23	1	**5K-9090**	5	SEAL-O-RING	
	24	1	**5P-7466**	1	CLIP (SLOT)	
	25	1	**5P-7467**	1	CLIP (TAB)	
	26	1	**5P-7468**	1	CLIP (SLOT)	
	27	1	**5P-7469**	1	CLIP (TAB)	
	28	1	**5P-8112**	1	GROMMET	

540-4004 **LINES GP-CHECK VALVE (**contd.**)** **i07269812**

NOTE	REF NO	GRAPHIC REF	PART NUMBER	QTY	PART NAME 1 2 3 4 5 6 (PRODUCT LEVEL)	SEE PAGE
	29	1	**5P-8444**	1	GROMMET (37-MM ID)	
	30	1	**6V-9746**	5	SEAL-O-RING	
B	31	1	**7K-1181**	11	STRAP-CABLE	
M	32	1	**7X-2533**	4	BOLT (M6X1X35-MM)	
	33	1	**7X-7729**	2	WASHER (11X25X3-MM THK)	
	34	1	**9X-6581**	1	NUT-O-RING SEAL (1-14-THD)	
I	35	1	**185-6804**	2	HOSE AS	
I	36	1	**185-6805**	2	HOSE AS	
I	37	1	**201-7473**	2	HOSE AS	

B - USE AS REQUIRED
I - REFER TO HYDRAULIC INFORMATION SYSTEM
M - METRIC PART

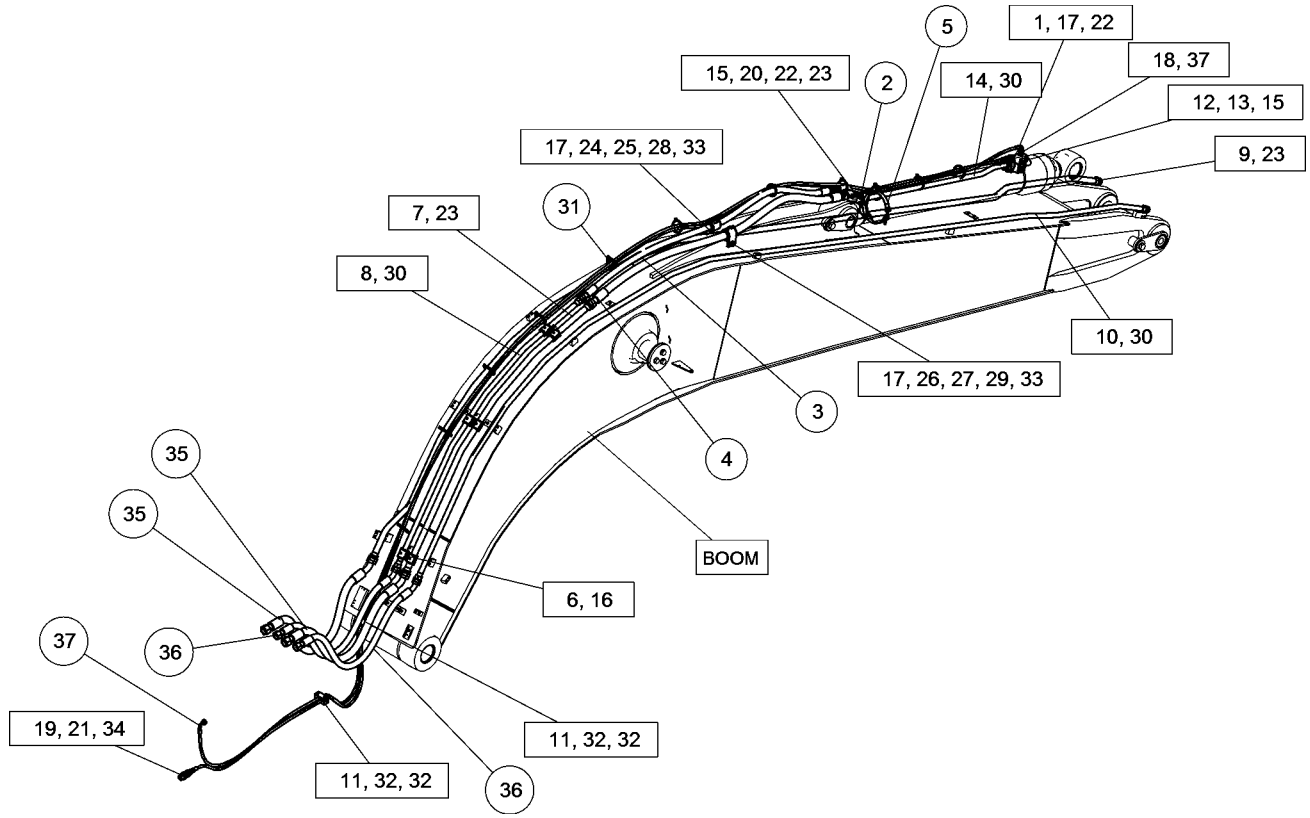

GRAPHIC #1 <END> g06271158

202-4100 LINES GP-CONNECTING

S/N: CH91-UP

AN ATTACHMENT

SMCS-5057 **i07833401**

NOTE	REF NO	GRAPHIC REF	PART NUMBER	QTY	PART NAME 1 2 3 4 5 6 (PRODUCT LEVEL)	SEE PAGE
	1	1	*170-5121*	2	ADAPTER AS	
					(EACH INCLUDES)	
		1	**4J-5477**	1	SEAL-O-RING	
		1	**162-6816**	1	SEAL	
		1	**377-9597**	1	ADAPTER	
I	2	1	**196-5387**	2	HOSE AS	
	3	1	**177-2215**	1	STRAP-DUAL CLAMP	

I - REFER TO HYDRAULIC INFORMATION SYSTEM

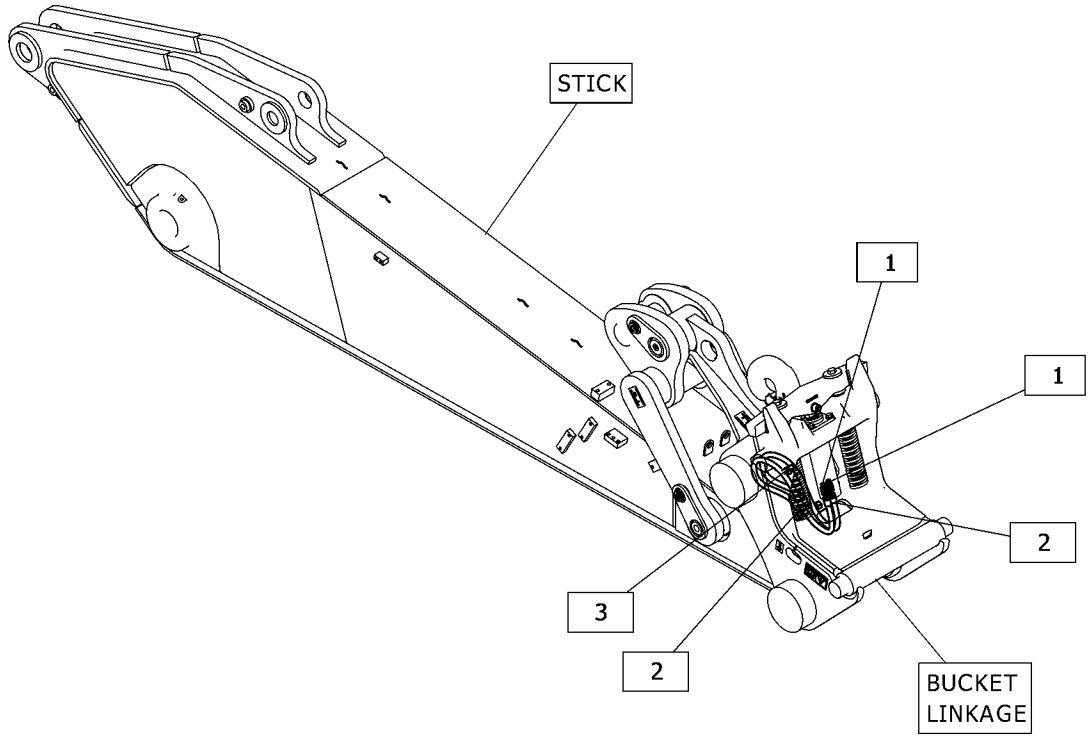

GRAPHIC #1 <END> g06344002

449-1136 LINES GP-COUPLER—B-LINKAGE

S/N: CH91-UP
FOR USE WITH 388-0067—PAGE: 776
PART OF 455-3910 COUPLER AR-QUICK
AN ATTACHMENT

SMCS-5057, 5133 **i07816767**

NOTE	REF NO	GRAPHIC REF	PART NUMBER	QTY	PART NAME 1 2 3 4 5 6 (PRODUCT LEVEL)	SEE PAGE
	1	1	**345-4467**	1	BRACKET AS	
I	2	1	**346-3046**	1	HOSE AS	
I	3	1	**346-3047**	1	HOSE AS	
I	4	1	**448-4180**	1	HOSE AS	
I	5	1	**448-4181**	1	HOSE AS	
	6	1	*148-8384*	1	ELBOW AS	
		1	**4J-5477**	2	SEAL-O-RING	
		1	**6V-8979**	1	ELBOW	
	7	1	**2P-1279**	1	LOCKNUT (9/16-18-THD)	
	8	1	**6V-8397**	2	SEAL-O-RING	
	9	1	**6V-8980**	1	ELBOW	
	10	1	**6V-9168**	1	NUT (11/16-16-THD)	
	11	1	**7K-1181**	5	STRAP-CABLE	
	12	1	**8T-4121**	2	WASHER-HARD (11X21X2.5-MM THK)	
M	13	1	**8T-4137**	2	BOLT (M10X1.5X20-MM)	

I - REFER TO HYDRAULIC INFORMATION SYSTEM
M - METRIC PART

449-1136 **LINES GP-COUPLER** (contd.) **i07816767**

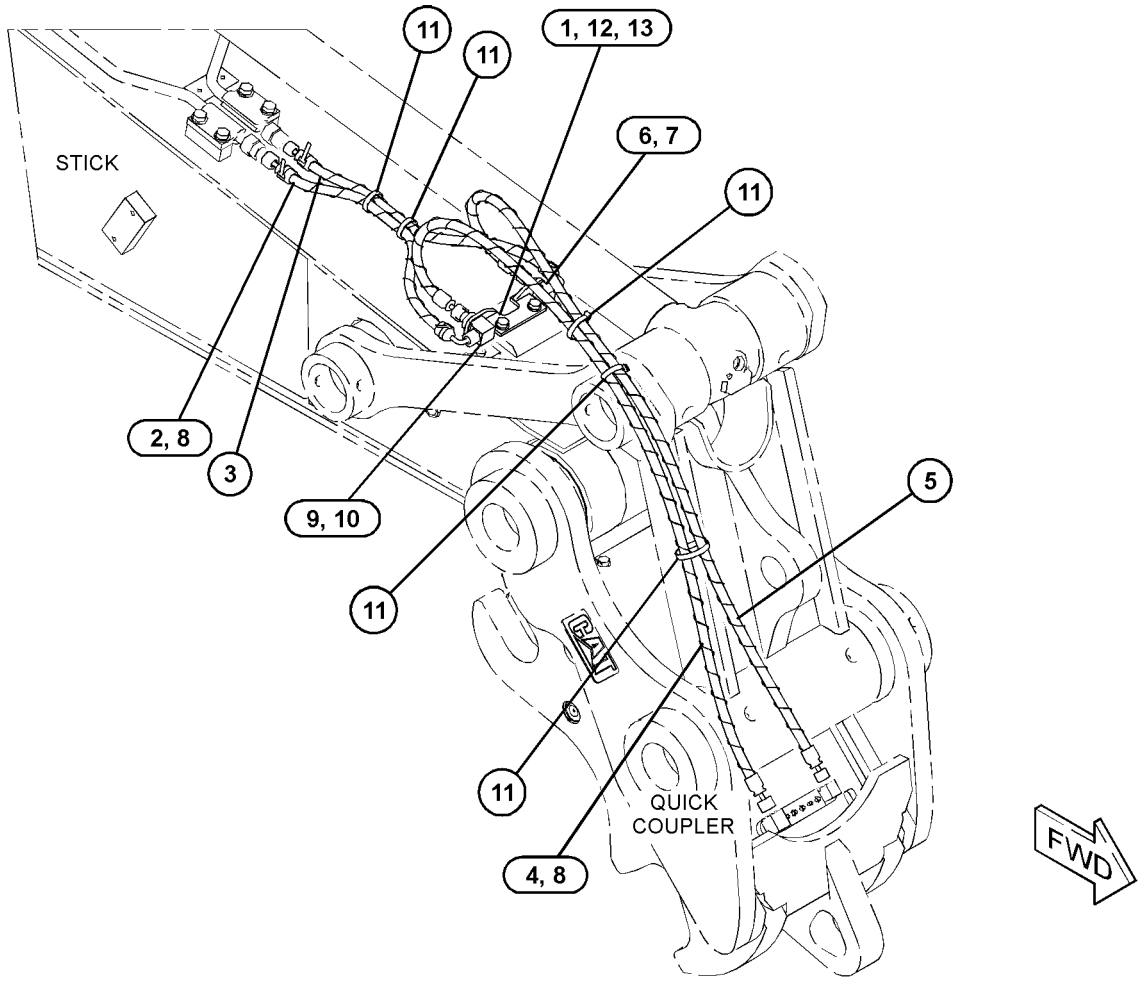

GRAPHIC #1 <END> g03708907

493-4062 LINES GP-COUPLER

S/N: CH91-UP
PART OF 498-0707 COUPLER AR-QUICK
AN ATTACHMENT

SMCS-5057, 5133 **i06599243**

NOTE	REF NO	GRAPHIC REF	PART NUMBER	QTY	PART NAME 1 2 3 4 5 6 (PRODUCT LEVEL)	SEE PAGE
	1	1	**7K-1181**	2	STRAP-CABLE	
	2	1	**102-8703**	1	PLATE-COVER	
	3	1	**156-5306**	2	CLAMP-HALF	
I	4	1	**493-4232**	1	HOSE AS	
	5	1	**493-7872**	1	BLOCK-SPACER	
I	6	1	**494-0436**	1	HOSE AS	
	7	1	**102-8704**	1	PLATE	
M	8	1	**8T-7329**	1	BOLT (M8X1.25X55-MM)	

I - REFER TO HYDRAULIC INFORMATION SYSTEM
M - METRIC PART

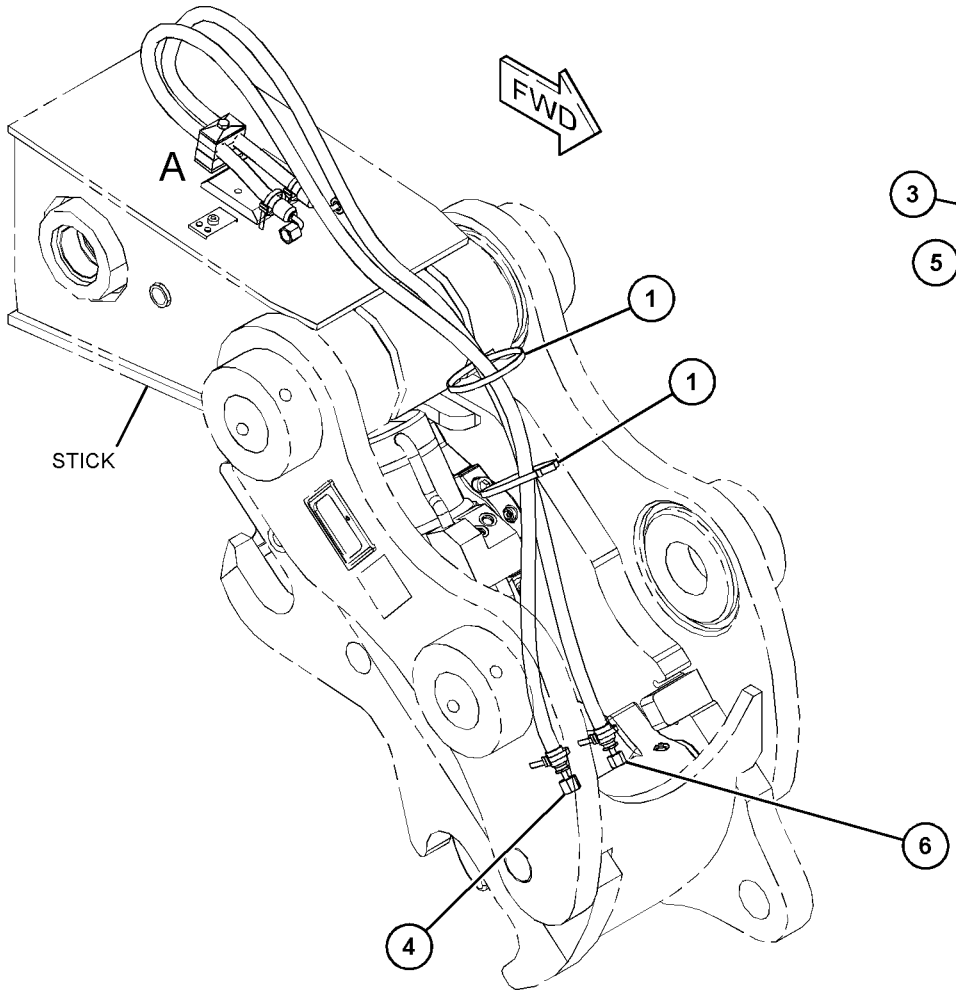

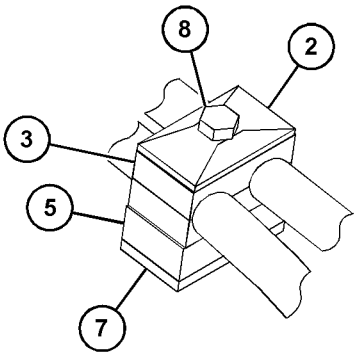

VIEW OF AREA A

GRAPHIC #1 <END> g06022612

416-6996 LINES GP-CYLINDER—BLADE, REAR

S/N: CH91-UP
PART OF 426-2550 UNDERCARRIAGE AR
AN ATTACHMENT

SMCS-5057 **i05925964**

NOTE	REF NO	GRAPHIC REF	PART NUMBER	QTY	PART NAME 1 2 3 4 5 6 (PRODUCT LEVEL)	SEE PAGE
I	1	1	**203-3840**	1	HOSE AS	
	2	1	**193-9063**	1	SWITCH AS-ROCKER (LEFT STABILIZER)	
		1	**111-7899**	1	GASKET	
Y	3	1	**196-7544**	1	VALVE GP-SOLENOID (BLADE)	705
	4	1	**206-2423**	1	SADDLE-MOUNTING	
I	5	1	**340-0261**	1	HOSE AS	
I	6	1	**340-0262**	1	HOSE AS	
	7	1	**359-5080**	2	BLOCK-MANIFOLD	
I	8	1	**366-4326**	1	HOSE AS	
	9	1	**117-1823**	7	CLAMP-SINGLE	
	10	1	*148-8318*	4	CONNECTOR AS	
					(EACH INCLUDES)	
		1	**3K-0360**	1	SEAL-O-RING	
		1	**6V-8397**	1	SEAL-O-RING	
		1	**6V-8634**	1	CONNECTOR	
	11	1	*148-8336*	5	CONNECTOR AS	
					(EACH INCLUDES)	
		1	**3J-1907**	1	SEAL-O-RING	
		1	**6V-8397**	1	SEAL-O-RING	
		1	**6V-8636**	1	CONNECTOR	
	12	1	*148-8374*	4	ELBOW AS	
					(EACH INCLUDES)	
		1	**3K-0360**	1	SEAL-O-RING	
		1	**6V-8397**	1	SEAL-O-RING	
		1	**6V-8723**	1	ELBOW	
	13	1	*148-8378*	1	ELBOW AS	
		1	**3J-1907**	1	SEAL-O-RING	
		1	**6V-8397**	1	SEAL-O-RING	
		1	**6V-8724**	1	ELBOW	
	14	1	*148-8395*	2	PLUG AS	
					(EACH INCLUDES)	
		1	**3K-0360**	1	SEAL-O-RING	
		1	**9S-8005**	1	PLUG (3/4-16-THD)	
	15	1	*150-3036*	1	ELBOW AS	
		1	**3J-1907**	1	SEAL-O-RING	
		1	**6V-8397**	1	SEAL-O-RING	
		1	**8T-1905**	1	ELBOW	
	16	1	**7K-1181**	2	STRAP-CABLE	
M	17	1	**7X-2534**	4	BOLT (M6X1X50-MM)	
M	18	1	**7X-2535**	2	BOLT (M6X1X60-MM)	
	19	1	**8M-2773**	1	CLIP (LOOP)	
I	20	1	**340-0260**	4	HOSE AS	

I - REFER TO HYDRAULIC INFORMATION SYSTEM
M - METRIC PART
Y - SEPARATE ILLUSTRATION

416-6996 **LINES GP-CYLINDER (**contd.**)** **i05925964**

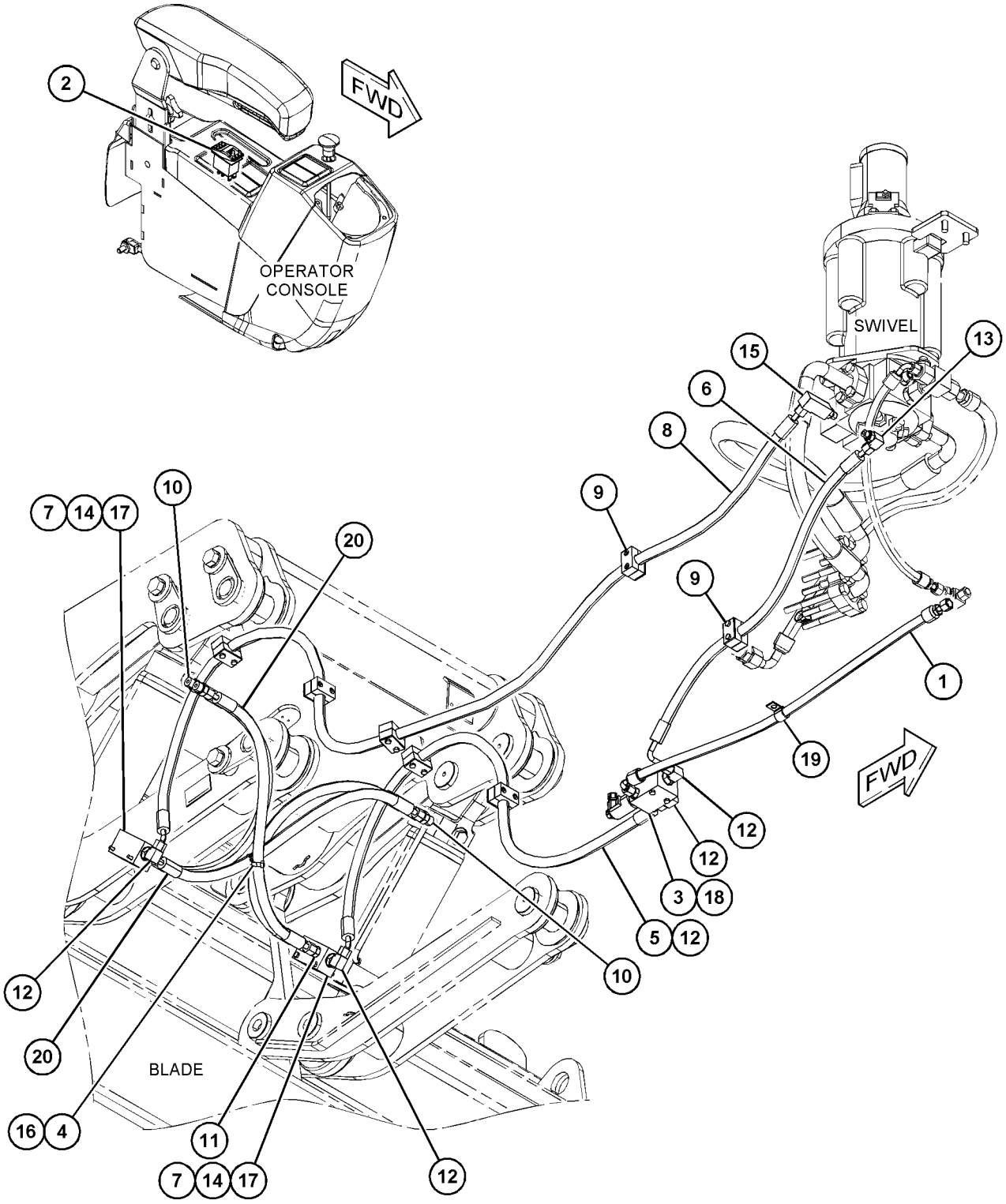

GRAPHIC #1 <END> g03566957

416-6998 LINES GP-CYLINDER

S/N: CH91-UP
PART OF 426-2551 UNDERCARRIAGE AR
AN ATTACHMENT

SMCS-5057 **i05922586**

NOTE	REF NO	GRAPHIC REF	PART NUMBER	QTY	PART NAME 1 2 3 4 5 6 (PRODUCT LEVEL)	SEE PAGE
Y	1	1	**196-7544**	1	VALVE GP-SOLENOID (BLADE)	705
	2	1	**206-2423**	2	SADDLE-MOUNTING	
I	3	1	**340-0270**	1	HOSE AS	
I	4	1	**340-0271**	1	HOSE AS	
I	5	1	**340-0272**	1	HOSE AS	
I	6	1	**340-0295**	1	HOSE AS	
	7	1	**359-5080**	2	BLOCK-MANIFOLD	
	8	1	**117-1823**	5	CLAMP-SINGLE	
	9	1	*148-8318*	5	CONNECTOR AS	
					(EACH INCLUDES)	
		1	**3K-0360**	1	SEAL-O-RING	
		1	**6V-8397**	1	SEAL-O-RING	
		1	**6V-8634**	1	CONNECTOR	
	10	1	*148-8336*	4	CONNECTOR AS	
					(EACH INCLUDES)	
		1	**3J-1907**	1	SEAL-O-RING	
		1	**6V-8397**	1	SEAL-O-RING	
		1	**6V-8636**	1	CONNECTOR	
	11	1	*148-8374*	3	ELBOW AS	
					(EACH INCLUDES)	
		1	**3K-0360**	1	SEAL-O-RING	
		1	**6V-8397**	1	SEAL-O-RING	
		1	**6V-8723**	1	ELBOW	
	12	1	*148-8378*	3	ELBOW AS	
					(EACH INCLUDES)	
		1	**3J-1907**	1	SEAL-O-RING	
		1	**6V-8397**	1	SEAL-O-RING	
		1	**6V-8724**	1	ELBOW	
	13	1	*148-8395*	2	PLUG AS	
					(EACH INCLUDES)	
		1	**3K-0360**	1	SEAL-O-RING	
		1	**9S-8005**	1	PLUG (3/4-16-THD)	
	14	1	**7K-1181**	4	STRAP-CABLE	
M	15	1	**7X-2534**	4	BOLT (M6X1X50-MM)	
M	16	1	**7X-2535**	2	BOLT (M6X1X60-MM)	
I	17	1	**340-0260**	4	HOSE AS	
	18	1	**193-9063**	1	SWITCH AS-ROCKER (LEFT STABILIZER)	
		1	**111-7899**	1	GASKET	

I - REFER TO HYDRAULIC INFORMATION SYSTEM
M - METRIC PART
Y - SEPARATE ILLUSTRATION

416-6998 **LINES GP-CYLINDER (**contd.**)** **i05922586**

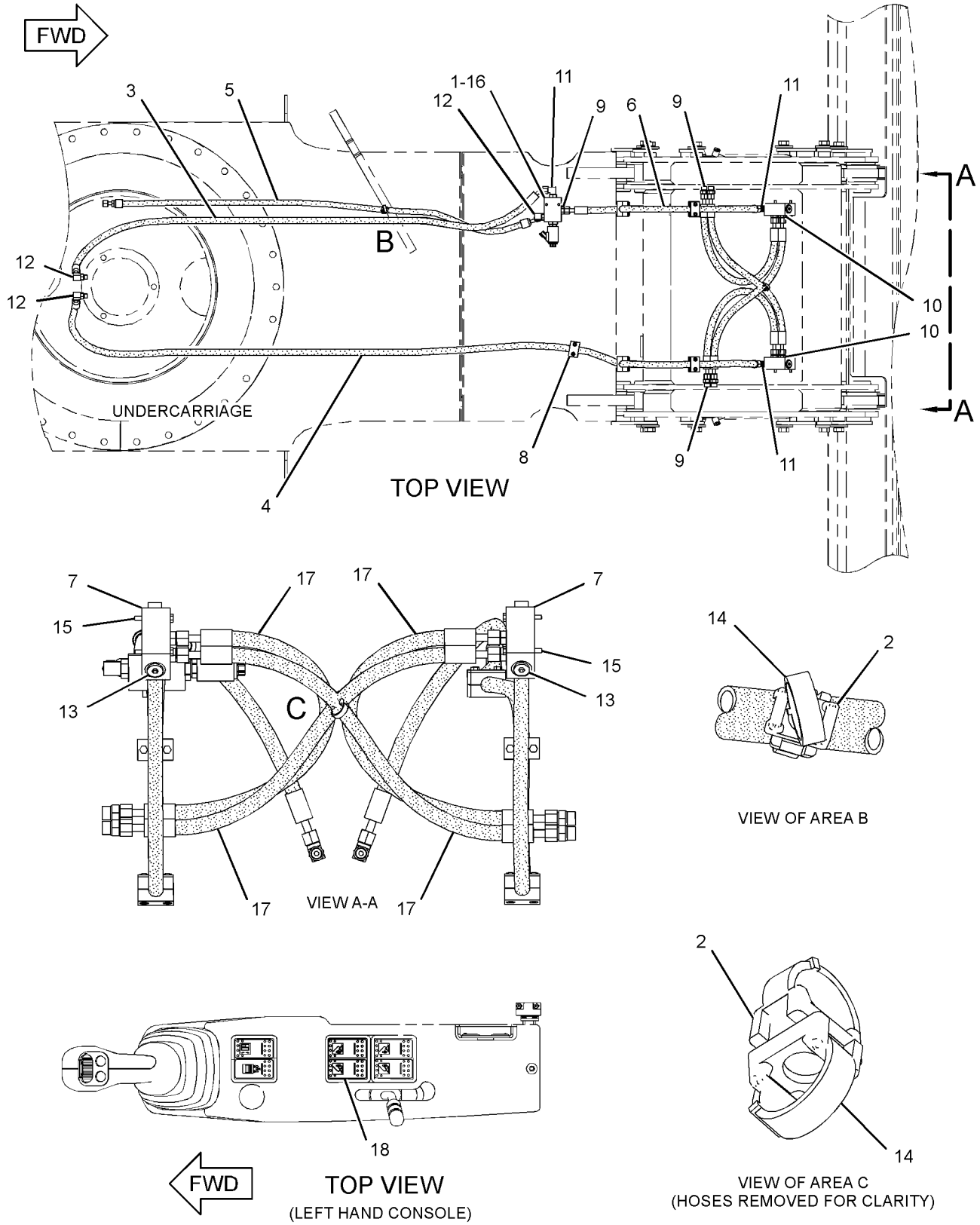

GRAPHIC #1 <END> g02395677

479-4263 LINES GP-CYLINDER

S/N: CH91-UP
FRONT DOZER, VALVE
PART OF 426-2551 UNDERCARRIAGE AR
AN ATTACHMENT

SMCS-5057 **i06249978**

NOTE	REF NO	GRAPHIC REF	PART NUMBER	QTY	PART NAME 1 2 3 4 5 6 (PRODUCT LEVEL)	SEE PAGE
	1	1	**7K-1181**	4	STRAP-CABLE	
	2	1	**206-2423**	2	SADDLE-MOUNTING	
	3	1	**193-9063**	1	SWITCH AS-ROCKER (LEFT STABILIZER)	
		1	**111-7899**	1	GASKET	
Y	4	1	**196-7544**	1	VALVE GP-SOLENOID (BLADE)	705
	5	1	**359-5080**	2	BLOCK-MANIFOLD	
I	6	1	**380-3616**	1	HOSE AS	
I	7	1	**433-6909**	1	HOSE AS	
I	8	1	**434-6269**	1	HOSE AS	
	9	1	**117-1805**	5	CLAMP-SINGLE	
I	10	1	**435-1875**	1	HOSE AS	
	11	1	*148-8318*	5	CONNECTOR AS	
					(EACH INCLUDES)	
		1	**3K-0360**	1	SEAL-O-RING	
		1	**6V-8397**	1	SEAL-O-RING	
		1	**6V-8634**	1	CONNECTOR	
	12	1	*148-8336*	4	CONNECTOR AS	
					(EACH INCLUDES)	
		1	**3J-1907**	1	SEAL-O-RING	
		1	**6V-8397**	1	SEAL-O-RING	
		1	**6V-8636**	1	CONNECTOR	
	13	1	*148-8374*	3	ELBOW AS	
					(EACH INCLUDES)	
		1	**3K-0360**	1	SEAL-O-RING	
		1	**6V-8397**	1	SEAL-O-RING	
		1	**6V-8723**	1	ELBOW	
	14	1	*148-8378*	3	ELBOW AS	
					(EACH INCLUDES)	
		1	**3J-1907**	1	SEAL-O-RING	
		1	**6V-8397**	1	SEAL-O-RING	
		1	**6V-8724**	1	ELBOW	
	15	1	*148-8395*	2	PLUG AS	
					(EACH INCLUDES)	
		1	**3K-0360**	1	SEAL-O-RING	
		1	**9S-8005**	1	PLUG (3/4-16-THD)	
M	16	1	**7X-2534**	4	BOLT (M6X1X50-MM)	
M	17	1	**7X-2535**	2	BOLT (M6X1X60-MM)	
I	18	1	**433-6858**	4	HOSE AS	

I - REFER TO HYDRAULIC INFORMATION SYSTEM
M - METRIC PART
Y - SEPARATE ILLUSTRATION

479-4263 **LINES GP-CYLINDER (**contd.**)** **i06249978**

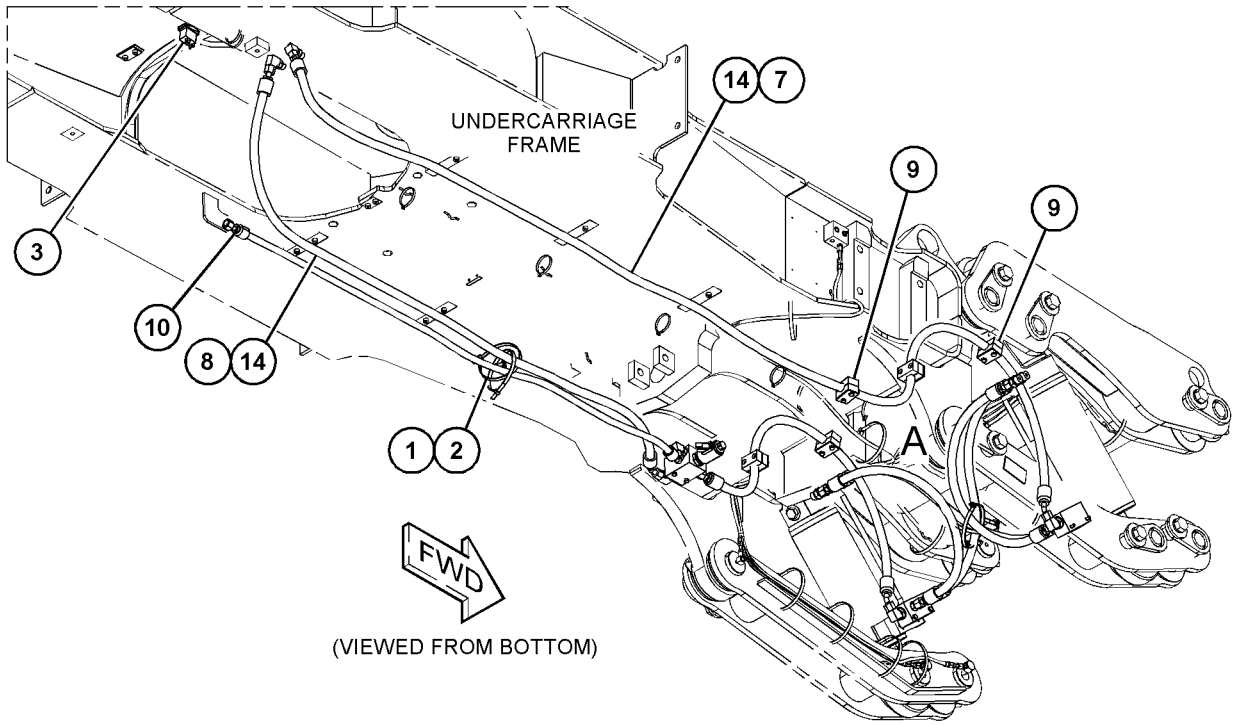

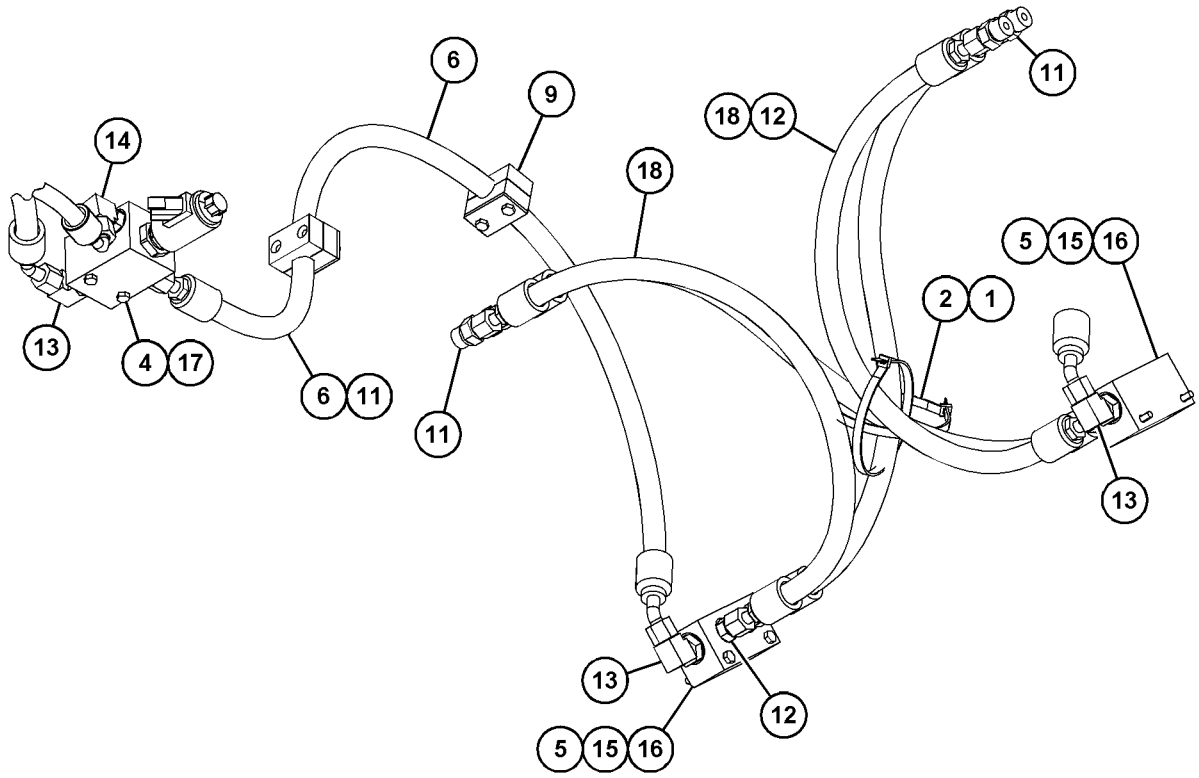

VIEW OF AREA A

GRAPHIC #1 <END> g06034411

479-4266 LINES GP-CYLINDER—REAR BLADE

S/N: CH91-UP
PART OF 426-2550 UNDERCARRIAGE AR
AN ATTACHMENT

SMCS-5057 **i06249967**

NOTE	REF NO	GRAPHIC REF	PART NUMBER	QTY	PART NAME 1 2 3 4 5 6 (PRODUCT LEVEL)	SEE PAGE
I	1	1	**203-3840**	1	HOSE AS	
	2	1	**193-9063**	1	SWITCH AS-ROCKER (LEFT STABILIZER)	
		1	**111-7899**	1	GASKET	
	3	1	**206-2423**	1	SADDLE-MOUNTING	
Y	4	1	**196-7544**	1	VALVE GP-SOLENOID (BLADE)	705
	5	1	**359-5080**	2	BLOCK-MANIFOLD	
I	6	1	**434-3071**	1	HOSE AS	
I	7	1	**434-6270**	1	HOSE AS	
I	8	1	**434-6271**	1	HOSE AS	
	9	1	**117-1805**	7	CLAMP-SINGLE	
	10	1	*148-8318*	4	CONNECTOR AS	
					(EACH INCLUDES)	
		1	**3K-0360**	1	SEAL-O-RING	
		1	**6V-8397**	1	SEAL-O-RING	
		1	**6V-8634**	1	CONNECTOR	
	11	1	*148-8336*	5	CONNECTOR AS	
					(EACH INCLUDES)	
		1	**3J-1907**	1	SEAL-O-RING	
		1	**6V-8397**	1	SEAL-O-RING	
		1	**6V-8636**	1	CONNECTOR	
	12	1	*148-8374*	4	ELBOW AS	
					(EACH INCLUDES)	
		1	**3K-0360**	1	SEAL-O-RING	
		1	**6V-8397**	1	SEAL-O-RING	
		1	**6V-8723**	1	ELBOW	
	13	1	*148-8378*	1	ELBOW AS	
		1	**3J-1907**	1	SEAL-O-RING	
		1	**6V-8397**	1	SEAL-O-RING	
		1	**6V-8724**	1	ELBOW	
	14	1	*148-8395*	2	PLUG AS	
					(EACH INCLUDES)	
		1	**3K-0360**	1	SEAL-O-RING	
		1	**9S-8005**	1	PLUG (3/4-16-THD)	
	15	1	*150-3036*	1	ELBOW AS	
		1	**3J-1907**	1	SEAL-O-RING	
		1	**6V-8397**	1	SEAL-O-RING	
		1	**8T-1905**	1	ELBOW	
	16	1	**7K-1181**	2	STRAP-CABLE	
M	17	1	**7X-2534**	4	BOLT (M6X1X50-MM)	
M	18	1	**7X-2535**	2	BOLT (M6X1X60-MM)	
	19	1	**8M-2773**	1	CLIP (LOOP)	
I	20	1	**433-6858**	4	HOSE AS	

I - REFER TO HYDRAULIC INFORMATION SYSTEM
M - METRIC PART
Y - SEPARATE ILLUSTRATION

479-4266 **LINES GP-CYLINDER (**contd.**)** **i06249967**

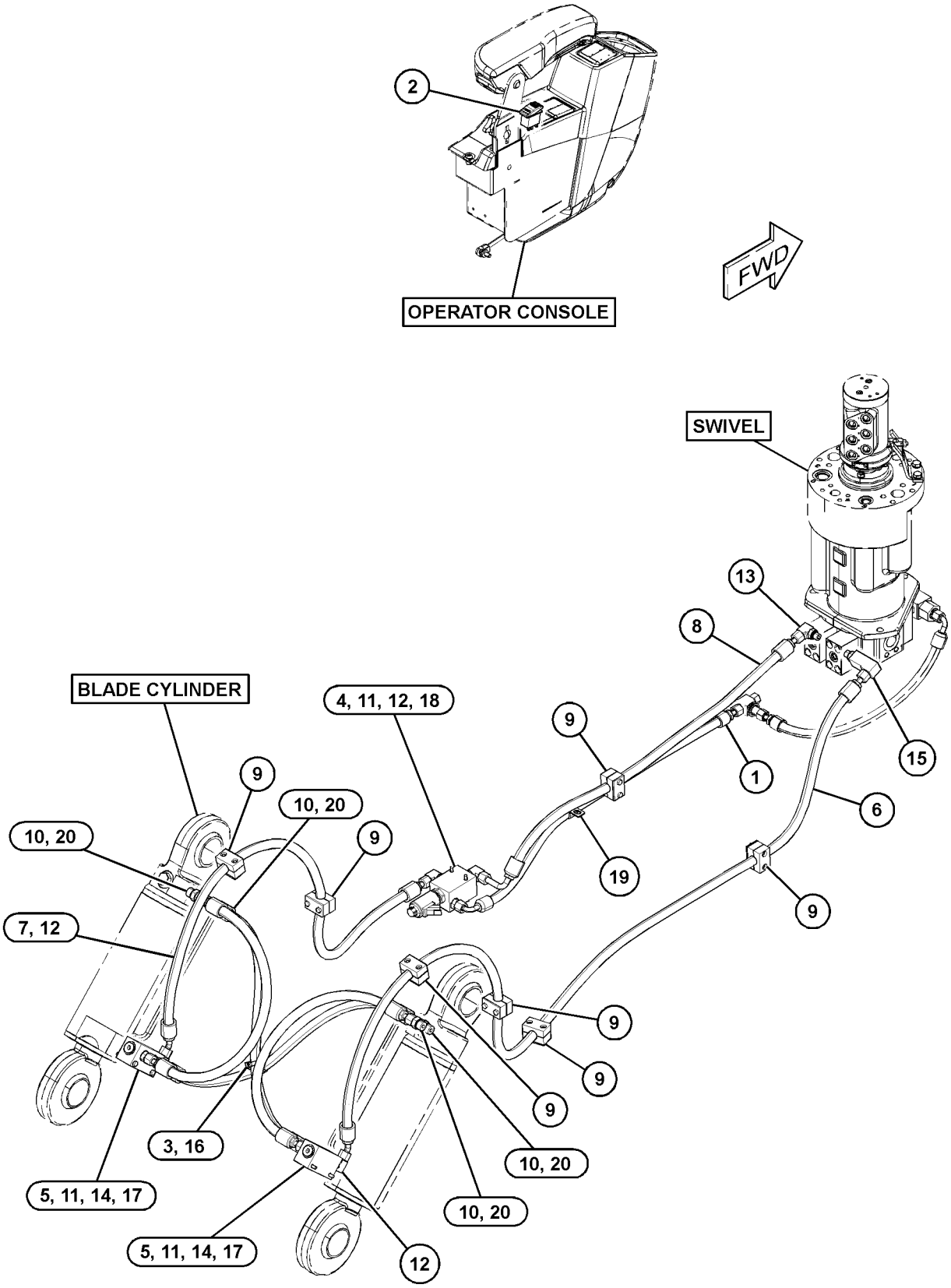

GRAPHIC #1 <END> g03867280

418-1194 LINES GP-FRONT

S/N: CH91-UP
PART OF 453-3004, 453-3005 VALVE & LINES AR
AN ATTACHMENT

SMCS-5057 **i05937839**

NOTE	REF NO	GRAPHIC REF	PART NUMBER	QTY	PART NAME 1 2 3 4 5 6 (PRODUCT LEVEL)	SEE PAGE
	1	1	**8U-0284**	6	FLANGE-HALF	
	2	1	**118-3139**	1	GUIDE	
	3	1	**118-8985**	6	NUT-CLAMP	
	4	1	**330-4700**	1	TUBE AS	
	5	1	**330-4701**	2	TUBE AS	
	6	1	**118-8984**	3	CLAMP	
	7	1	**4J-0520**	3	SEAL-O-RING	
	8	1	**5K-9090**	1	SEAL-O-RING	
	9	1	**6V-9746**	2	SEAL-O-RING	
M	10	1	**8T-4183**	12	BOLT (M12X1.75X40-MM)	

M - METRIC PART

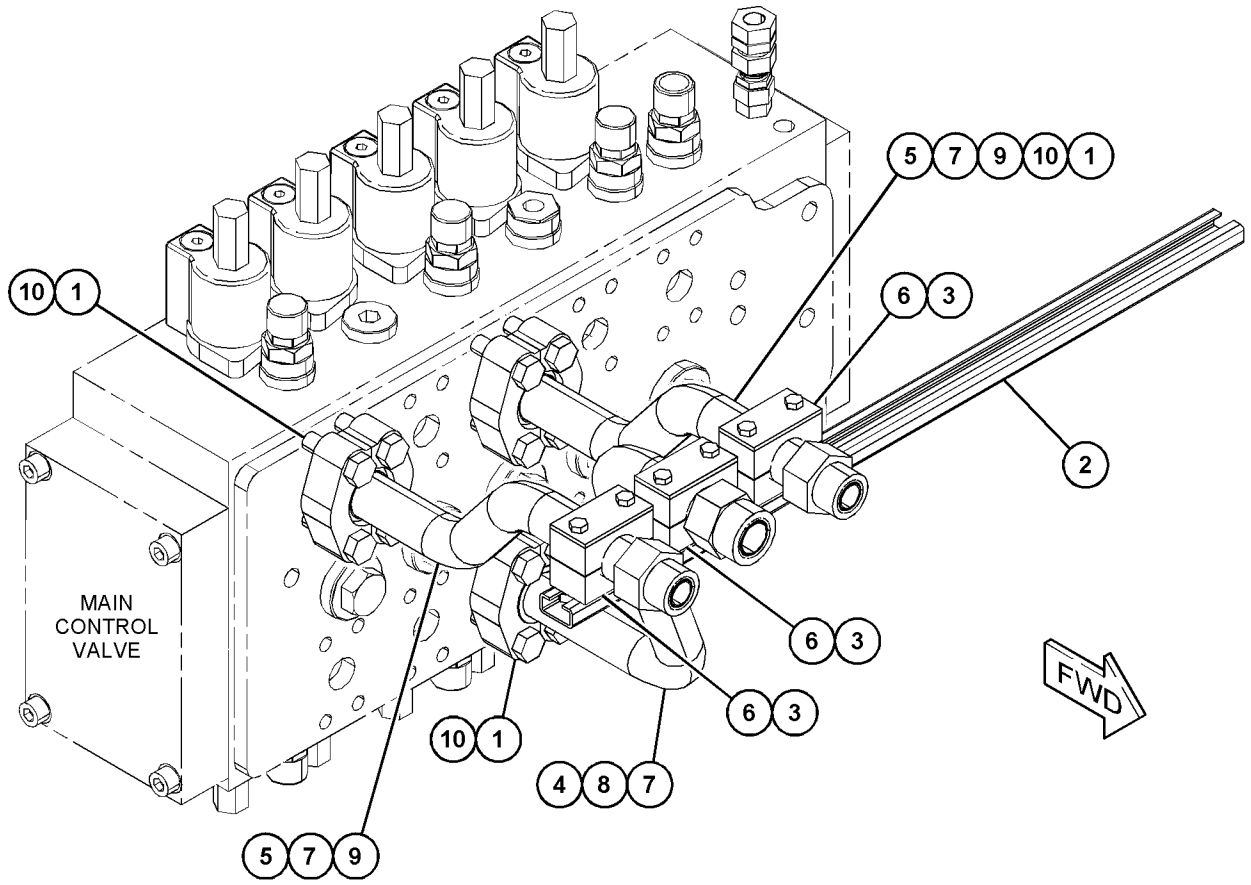

GRAPHIC #1 <END> g03567497

456-5832 LINES GP-FRONT

S/N: CH91-UP

PART OF 425-3925, 425-9134, 446-2738, 446-2745 VALVE & LINES AR AN ATTACHMENT

SMCS-5057 **i05934578**

NOTE	REF NO	GRAPHIC REF	PART NUMBER	QTY	PART NAME 1 2 3 4 5 6 (PRODUCT LEVEL)	SEE PAGE
	1	1	**8U-0284**	4	FLANGE-HALF	
	2	1	**118-3139**	1	GUIDE	
	3	1	**118-8985**	4	NUT-CLAMP	
	4	1	**330-4700**	1	TUBE AS	
	5	1	**330-4701**	1	TUBE AS	
	6	1	**118-8984**	2	CLAMP	
	7	1	**4J-0520**	2	SEAL-O-RING	
	8	1	**5K-9090**	1	SEAL-O-RING	
	9	1	**6V-9746**	1	SEAL-O-RING	
M	10	1	**8T-4183**	8	BOLT (M12X1.75X40-MM)	

M - METRIC PART

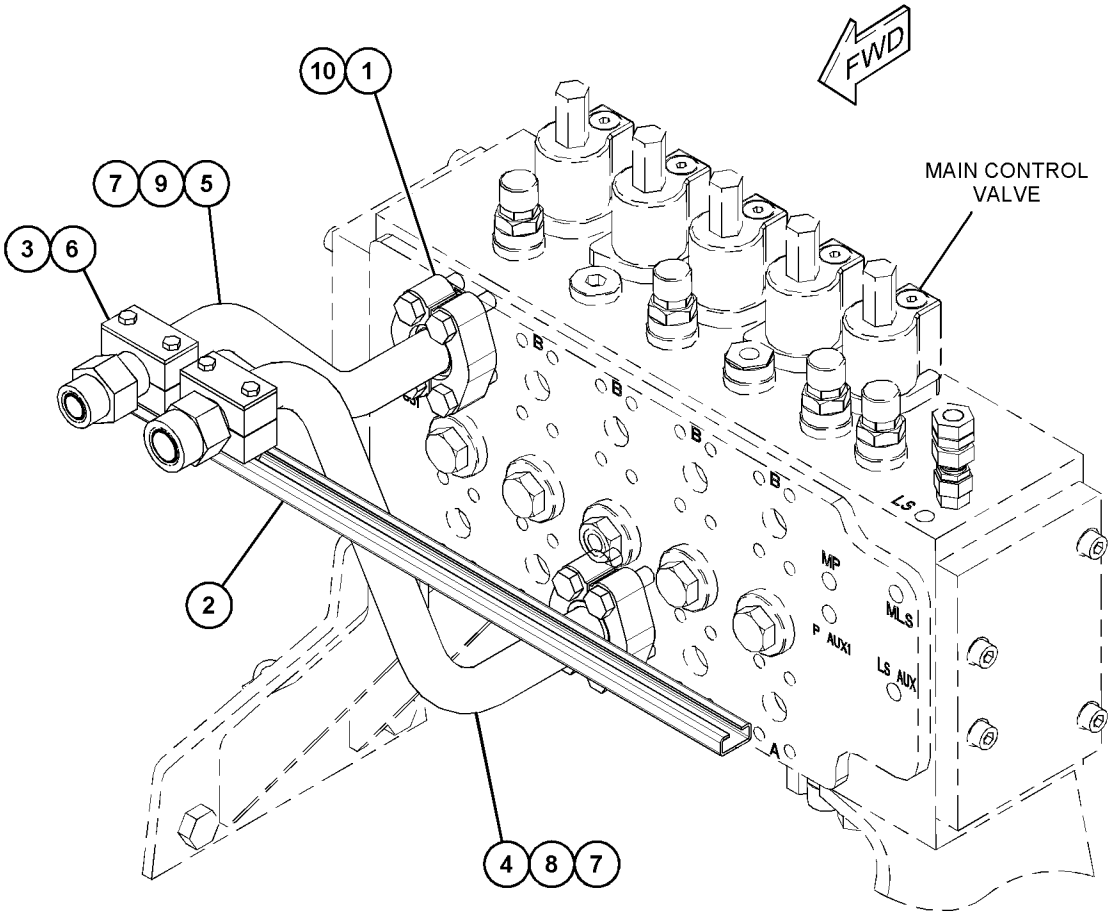

GRAPHIC #1 <END> g03743285

188-7607 LINES GP-HYDRAULIC

S/N: CH91-UP
PART OF 449-2784 HYDRAULIC AR
ALSO AN ATTACHMENT

SMCS-5057 **i05934392**

NOTE	REF NO	GRAPHIC REF	PART NUMBER	QTY	PART NAME 1 2 3 4 5 6 (PRODUCT LEVEL)	SEE PAGE
	1	1	**5W-9857**	4	FLANGE-HALF	
	2	1	**8U-0284**	2	FLANGE-HALF	
I	3	1	**185-6801**	1	HOSE AS	
I	4	1	**185-6802**	1	HOSE AS	
I	5	1	**185-6803**	1	HOSE AS	
	6	1	**330-4677**	1	TUBE AS	
	7	1	**330-4676**	1	TUBE AS	
	8	1	**330-4656**	1	TUBE AS	
I	9	1	**288-0895**	1	HOSE AS	
M	10	1	**8T-4184**	16	BOLT (M12X1.75X45-MM)	
	11	1	**1P-3703**	5	SEAL-RECTANGULAR	
	12	1	**4J-0520**	1	SEAL-O-RING	
	13	1	**4J-5267**	2	SEAL-O-RING	
	14	1	**5K-9090**	1	SEAL-O-RING	
	15	1	**6V-0400**	10	FLANGE-HALF	
	16	1	**6V-9746**	2	SEAL-O-RING	
M	17	1	**105-3478**	8	BOLT-SOCKET HEAD (M10X1.5X35-MM)	
	18	1	**8T-4223**	24	WASHER-HARD (13.5X25.5X3-MM THK)	
M	19	1	**113-2004**	8	BOLT-SOCKET HEAD (M12X1.75X45-MM)	

I - REFER TO HYDRAULIC INFORMATION SYSTEM
M - METRIC PART

188-7607 **LINES GP-HYDRAULIC (**contd.**)** **i05934392**

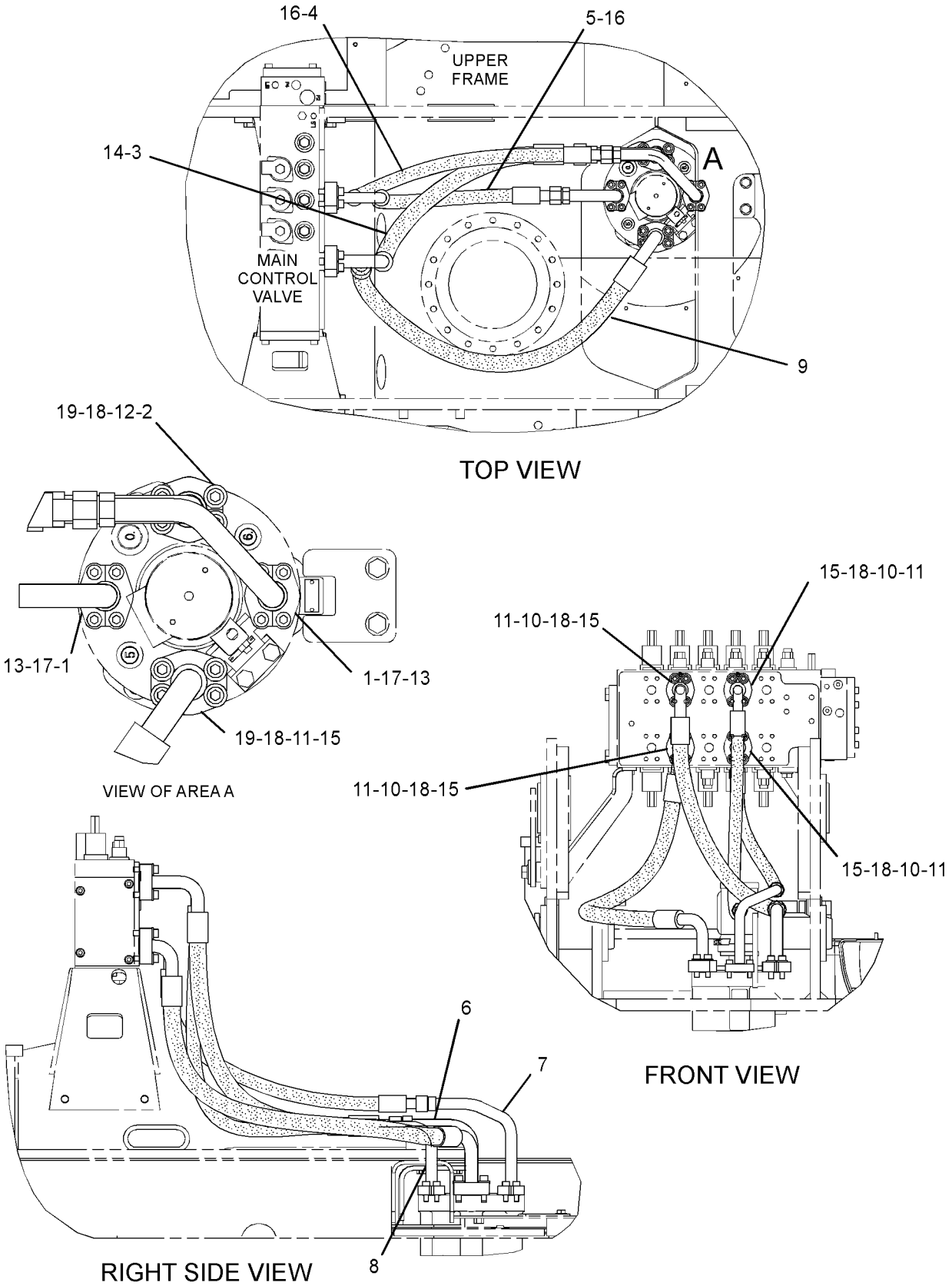

GRAPHIC #1 <END> g01362132

259-6559 LINES GP-HYDRAULIC

S/N: CH91-UP
PART OF 449-2784 HYDRAULIC AR
ALSO AN ATTACHMENT

SMCS-5057 **i05934393**

NOTE	REF NO	GRAPHIC REF	PART NUMBER	QTY	PART NAME 1 2 3 4 5 6 (PRODUCT LEVEL)	SEE PAGE
	1	1	**144-6060**	1	ORIFICE	
	2	1	**144-8070**	1	TEE	
Y	3	1	**145-7750**	1	FILTER GP-OIL (HYDRAULIC, PILOT)	386
	4	1	**197-9995**	1	FLANGE (90-DEG)	
I	5	1	**208-7047**	1	HOSE AS	
M	6	1	**105-3487**	2	BOLT-SOCKET HEAD (M6X1X20-MM)	
I	8	2	**133-2154**	2	HOSE AS	
	9	1,2	*148-8336*	11	CONNECTOR AS	
					(EACH INCLUDES)	
		1,2	**3J-1907**	1	SEAL-O-RING	
		1,2	**6V-8397**	1	SEAL-O-RING	
		1,2	**6V-8636**	1	CONNECTOR	
	10	1	**8U-0215**	1	SEAL-O-RING	
	11	2	*148-8340*	2	CONNECTOR AS	
					(EACH INCLUDES)	
		2	**3K-0360**	1	SEAL-O-RING	
		2	**6V-8398**	1	SEAL-O-RING	
		2	**6V-8639**	1	CONNECTOR	
	12	1	*148-8345*	3	CONNECTOR AS	
					(EACH INCLUDES)	
		1	**2M-9780**	1	SEAL-O-RING	
		1	**6V-8398**	1	SEAL-O-RING	
		1	**6V-8638**	1	CONNECTOR	
	14	1	*148-8367*	1	ELBOW AS	
		1	**6V-8397**	1	SEAL-O-RING	
		1	**6V-9850**	1	ELBOW	
	15	1	*148-8372*	1	ELBOW AS	
		1	**2M-9780**	1	SEAL-O-RING	
		1	**6V-8398**	1	SEAL-O-RING	
		1	**6V-8721**	1	ELBOW	
	16	1,2	*148-8378*	10	ELBOW AS	
					(EACH INCLUDES)	
		1,2	**3J-1907**	1	SEAL-O-RING	
		1,2	**6V-8397**	1	SEAL-O-RING	
		1,2	**6V-8724**	1	ELBOW	
	17	1	*148-8391*	1	ELBOW AS	
		1	**2S-4078**	1	SEAL-O-RING	
		1	**5K-9090**	1	SEAL-O-RING	
		1	**8T-8987**	1	ELBOW	
M	18	1	**105-3486**	2	BOLT-SOCKET HEAD (M6X1X50-MM)	
	19	2	**8T-6850**	1	SEAL-O-RING	
I	20	1	**154-9822**	1	HOSE AS	
	21	1	**5K-9090**	1	SEAL-O-RING	
	22	1,2	**6V-8397**	3	SEAL-O-RING	
	23	1	**8T-4224**	4	WASHER-HARD (8.8X16X2-MM THK)	
M	24	1	**8T-4908**	4	BOLT (M8X1.25X25-MM)	
	25	2	**8T-6725**	1	CONNECTOR	
I	26	1	**146-9039**	1	HOSE AS	

259-6559 **LINES GP-HYDRAULIC (**contd.**)** **i05934393**

NOTE	REF NO	GRAPHIC REF	PART NUMBER	QTY	PART NAME 1 2 3 4 5 6 (PRODUCT LEVEL)	SEE PAGE
	27	2	*148-8435*	1	TEE AS	
		2	**3J-1907**	1	SEAL-O-RING	
		2	**6V-8397**	2	SEAL-O-RING	
		2	**6V-8781**	1	TEE	

I - REFER TO HYDRAULIC INFORMATION SYSTEM
M - METRIC PART
Y - SEPARATE ILLUSTRATION

259-6559 **LINES GP-HYDRAULIC** (contd.) **i05934393**

REFER TO ALL ILLUSTRATIONS OF THIS GROUP FOR AUXILIARY VIEWS

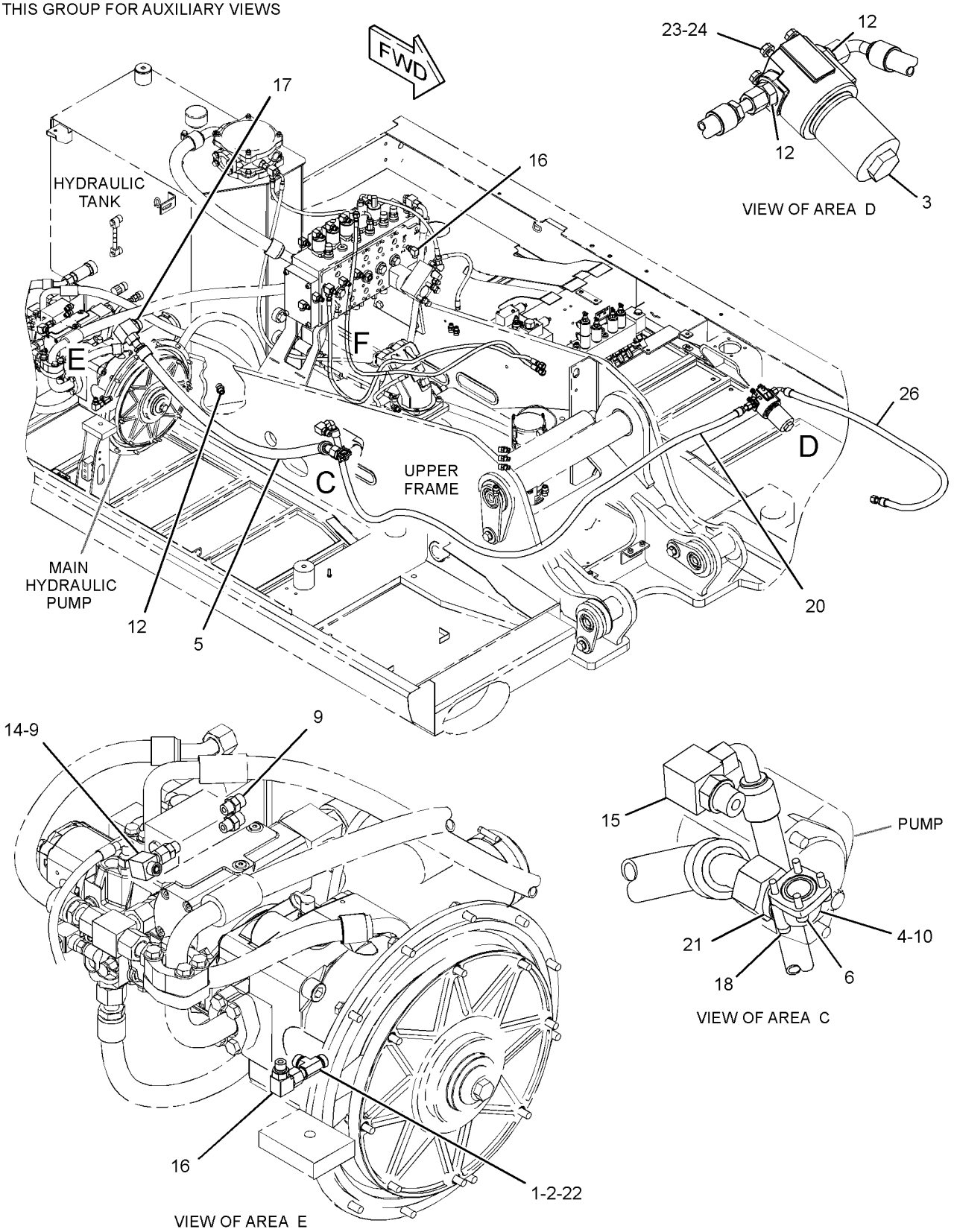

GRAPHIC #1 g03375107

259-6559 **LINES GP-HYDRAULIC (**contd.**)** **i05934393**

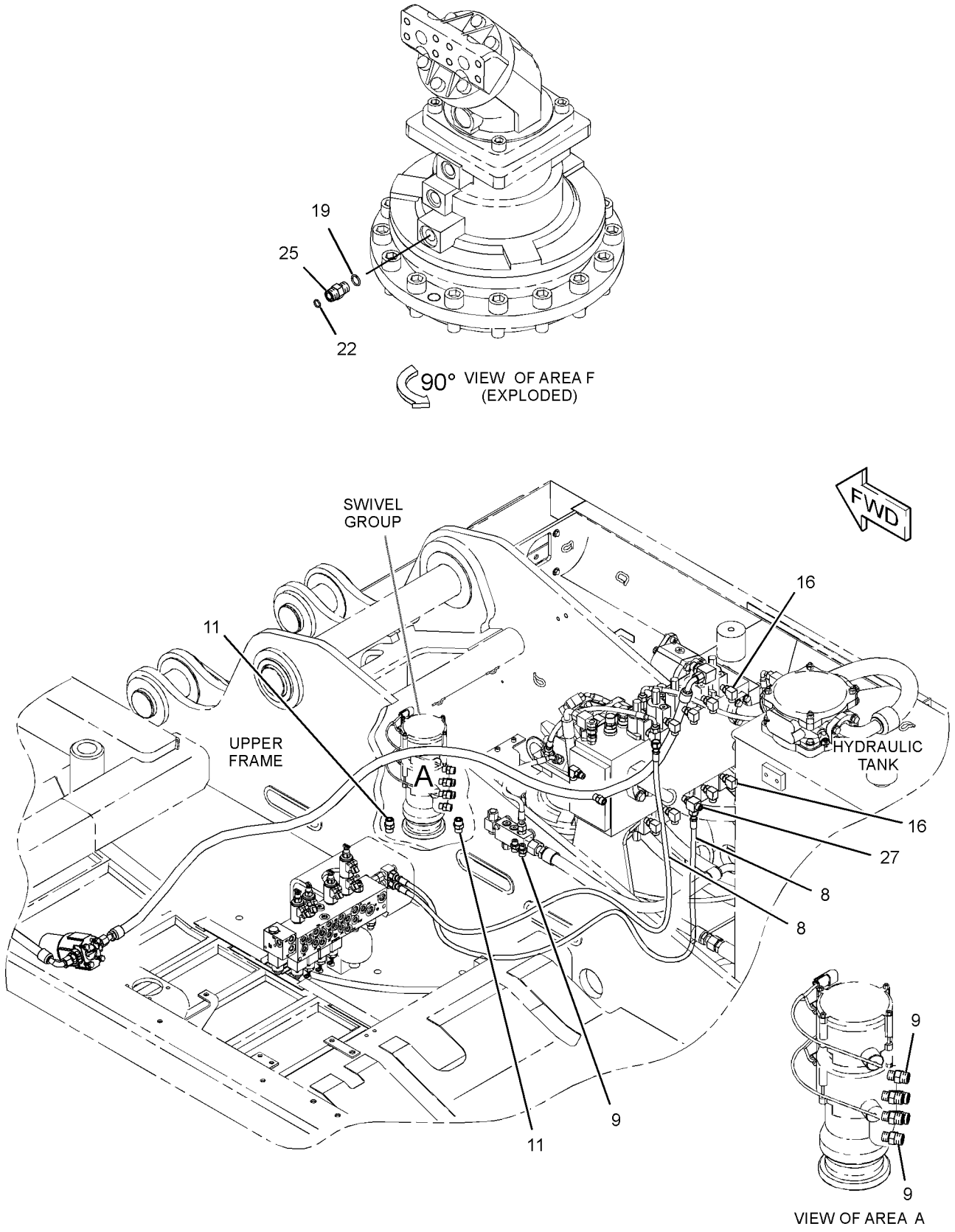

GRAPHIC #2 <END> g03375108

340-0267 LINES GP-HYDRAULIC—2-CIRCUITS

S/N: CH91-UP
PART OF 354-7286 HYDRAULIC AR-LOWER
ALSO AN ATTACHMENT

SMCS-5057 **i05934388**

NOTE	REF NO	GRAPHIC REF	PART NUMBER	QTY	PART NAME 1 2 3 4 5 6 (PRODUCT LEVEL)	SEE PAGE
	1	1	**6V-0852**	1	CAP-DUST (HYDRAULIC OIL)	
	2	1	**8U-0284**	4	FLANGE-HALF	
	3	1	**127-4996**	4	FLANGE-HALF	
I	4	1	**145-5004**	1	HOSE AS	
I	5	1	**186-3140**	1	HOSE AS	
	6	1	*198-4054*	6	CLAMP GP-HYDRAULIC LINES	
					(EACH INCLUDES)	
		1	**197-5319**	1	PLATE	
		1	**198-2532**	2	CLAMP	
I	7	1	**200-7499**	1	HOSE AS	
I	8	1	**246-5863**	1	HOSE AS	
M	9	1	**290-6681**	6	BOLT (M14X2X135-MM)	
	10	1	**299-8921**	1	FITTING AS-HYDRAULIC	
	11	1	**337-5851**	2	BLOCK	
M	12	1	**129-3181**	8	BOLT-SOCKET HEAD (M10X1.5X55-MM)	
	13	1	*148-8327*	2	CONNECTOR AS	
					(EACH INCLUDES)	
		1	**3D-2824**	1	SEAL-O-RING	
		1	**6V-8637**	1	CONNECTOR	
		1	**6V-9746**	1	SEAL-O-RING	
	14	1	*148-8340*	2	CONNECTOR AS	
					(EACH INCLUDES)	
		1	**3K-0360**	1	SEAL-O-RING	
		1	**6V-8398**	1	SEAL-O-RING	
		1	**6V-8639**	1	CONNECTOR	
	15	1	*148-8417*	1	REDUCER AS	
		1	**6V-8397**	1	SEAL-O-RING	
		1	**6V-8941**	1	REDUCER	
	16	1	*150-4033*	1	ADAPTER AS	
		1	**6V-9746**	2	SEAL-O-RING	
		1	**6V-9846**	1	TEE	
	17	1	*150-4034*	1	TEE AS	
		1	**6V-8397**	3	SEAL-O-RING	
		1	**8T-0379**	1	TEE-BULKHEAD	
	18	1	*162-0177*	4	PLUG AS	
					(EACH INCLUDES)	
		1	**3J-1907**	1	SEAL-O-RING	
		1	**9S-8004**	1	PLUG (9/16-18-THD)	
	19	1	**1P-3703**	2	SEAL-RECTANGULAR	
	20	1	**1P-3704**	2	SEAL-RECTANGULAR	
	21	1	**4J-5267**	2	SEAL-O-RING	
	22	1	**6V-8367**	2	LOCKWASHER	
	23	1	**6V-9168**	1	NUT (11/16-16-THD)	
	24	1	**6V-9829**	2	CAP (ORFS)	
M	25	1	**7X-2533**	12	BOLT (M6X1X35-MM)	
M	26	1	**8C-6854**	2	BOLT (M14X2X50-MM)	
M	27	1	**8T-4194**	8	BOLT (M12X1.75X50-MM)	

340-0267 **LINES GP-HYDRAULIC (**contd.**)** **i05934388**

NOTE	REF NO	GRAPHIC REF	PART NUMBER	QTY	PART NAME 1 2 3 4 5 6 (PRODUCT LEVEL)	SEE PAGE
	28	1	**9X-6580**	1	NUT (1-3/16-12-THD)	
I	29	1	**225-1943**	2	HOSE AS	

I - REFER TO HYDRAULIC INFORMATION SYSTEM
M - METRIC PART

340-0267 **LINES GP-HYDRAULIC (**contd.**)** **i05934388**

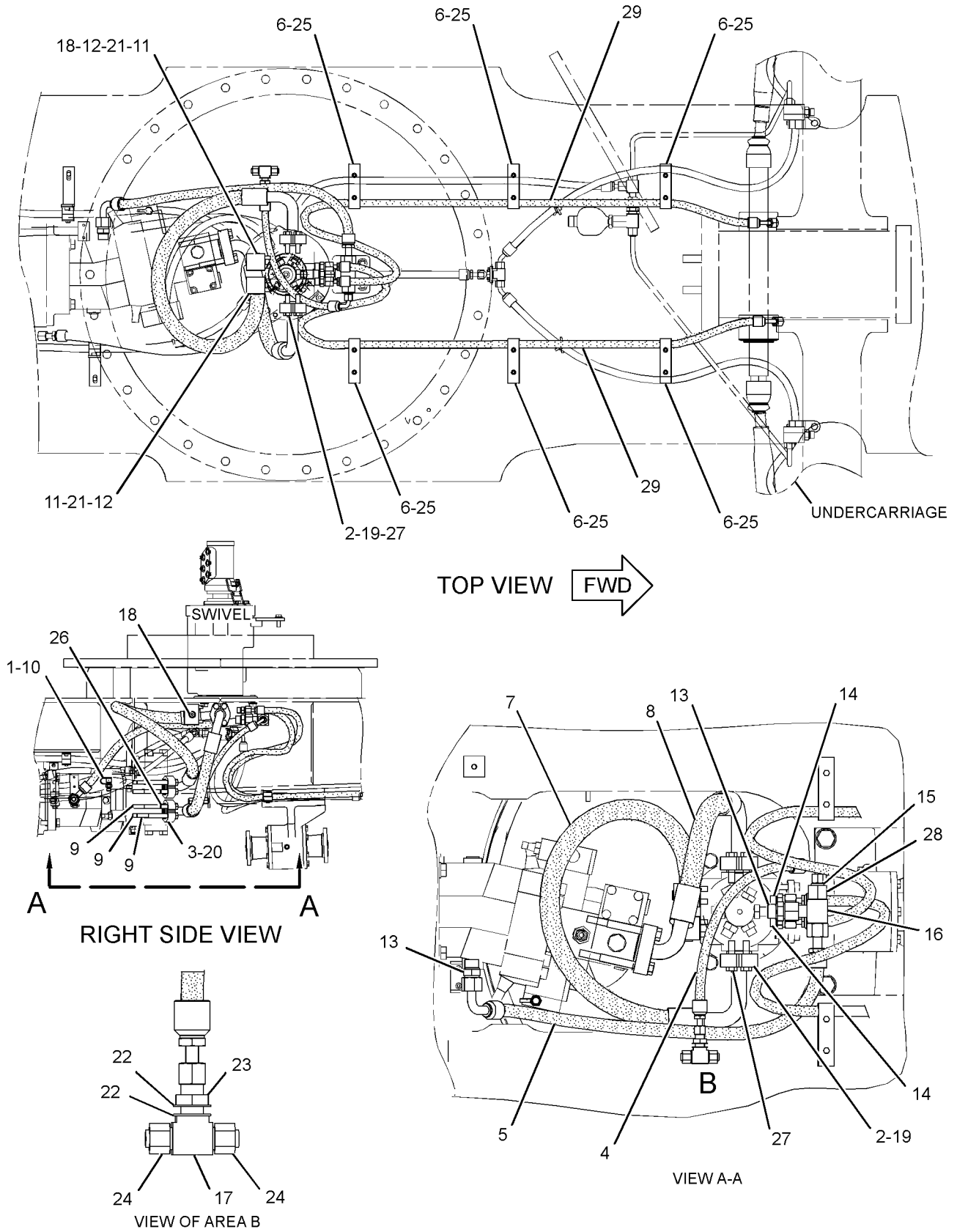

GRAPHIC #1 <END> g02394505

340-0275 LINES GP-HYDRAULIC–4 CIRCUITS

S/N: CH91-UP
PART OF 354-7286 HYDRAULIC AR-LOWER
ALSO AN ATTACHMENT

SMCS-5057 **i05934390**

NOTE	REF NO	GRAPHIC REF	PART NUMBER	QTY	PART NAME 1 2 3 4 5 6 (PRODUCT LEVEL)	SEE PAGE
I	1	1	**8I-0685**	1	HOSE AS	
I	4	1	**103-1742**	1	HOSE AS	
	5	1	**115-9114**	2	BRACKET AS	
	6	1	**116-8151**	1	CLAMP-SINGLE	
	7	1	**117-7002**	7	CLAMP-SINGLE	
I	8	1	**199-7479**	1	HOSE AS	
I	9	1	**215-4723**	1	HOSE AS	
I	10	1	**246-5862**	1	HOSE AS	
	11	1	**312-4585**	1	PLATE AS	
	12	1	**337-5852**	1	TUBE AS	
	13	1	**337-5853**	1	TUBE AS	
	14	1	**337-5867**	1	PLATE	
	15	1	**337-5868**	1	PLATE AS	
	16	1	*148-8336*	1	CONNECTOR AS	
		1	**3J-1907**	1	SEAL-O-RING	
		1	**6V-8397**	1	SEAL-O-RING	
		1	**6V-8636**	1	CONNECTOR	
	17	1	*148-8346*	2	ELBOW AS	
					(EACH INCLUDES)	
		1	**3K-0360**	1	SEAL-O-RING	
		1	**6V-8398**	1	SEAL-O-RING	
		1	**8T-1686**	1	ADAPTER-ELBOW	
	18	1	*148-8353*	2	ELBOW AS	
					(EACH INCLUDES)	
		1	**3J-1907**	1	SEAL-O-RING	
		1	**6V-8397**	1	SEAL-O-RING	
		1	**6V-9001**	1	ELBOW	
	19	1	*148-8370*	1	ELBOW AS	
		1	**6V-8398**	1	SEAL-O-RING	
		1	**6V-9851**	1	ELBOW	
	20	1	*148-8427*	1	TEE AS	
		1	**6V-8398**	3	SEAL-O-RING	
		1	**8T-6895**	1	TEE-UNION	
	21	1	*148-8444*	1	TEE AS-SWIVEL	
		1	**6V-8398**	2	SEAL-O-RING	
		1	**6V-9837**	1	TEE-SWIVEL	
	22	1	*150-4034*	1	TEE AS	
		1	**6V-8397**	3	SEAL-O-RING	
		1	**8T-0379**	1	TEE-BULKHEAD	
	23	1	*150-4037*	1	TEE AS	
		1	**6V-8398**	2	SEAL-O-RING	
		1	**6V-9844**	1	TEE-SWIVEL	
	26	1	**5K-1094**	2	LOCKWASHER	
	27	1	**6V-8367**	2	LOCKWASHER	
	28	1	**6V-9168**	1	NUT (11/16-16-THD)	
	29	1	**6V-9169**	1	NUT (13/16-16-THD)	
	30	1	**8T-4121**	2	WASHER-HARD (11X21X2.5-MM THK)	

340-0275 **LINES GP-HYDRAULIC (**contd.**)** **i05934390**

NOTE	REF NO	GRAPHIC REF	PART NUMBER	QTY	PART NAME 1 2 3 4 5 6 (PRODUCT LEVEL)	SEE PAGE
M	31	1	**8T-4137**	2	BOLT (M10X1.5X20-MM)	
M	32	1	**8T-4138**	2	BOLT (M6X1X20-MM)	
	33	1	**9X-8256**	2	WASHER (6.6X12X2-MM THK)	
I	34	1	**148-7786**	2	HOSE AS	
I	35	1	**246-5864**	2	HOSE AS	
	36	1	**206-2423**	1	SADDLE-MOUNTING	
	37	1	**7K-1181**	2	STRAP-CABLE	
	38	1	**6V-9830**	1	CAP (ORFS)	

I - REFER TO HYDRAULIC INFORMATION SYSTEM
M - METRIC PART

340-0275 **LINES GP-HYDRAULIC (**contd.**)** **i05934390**

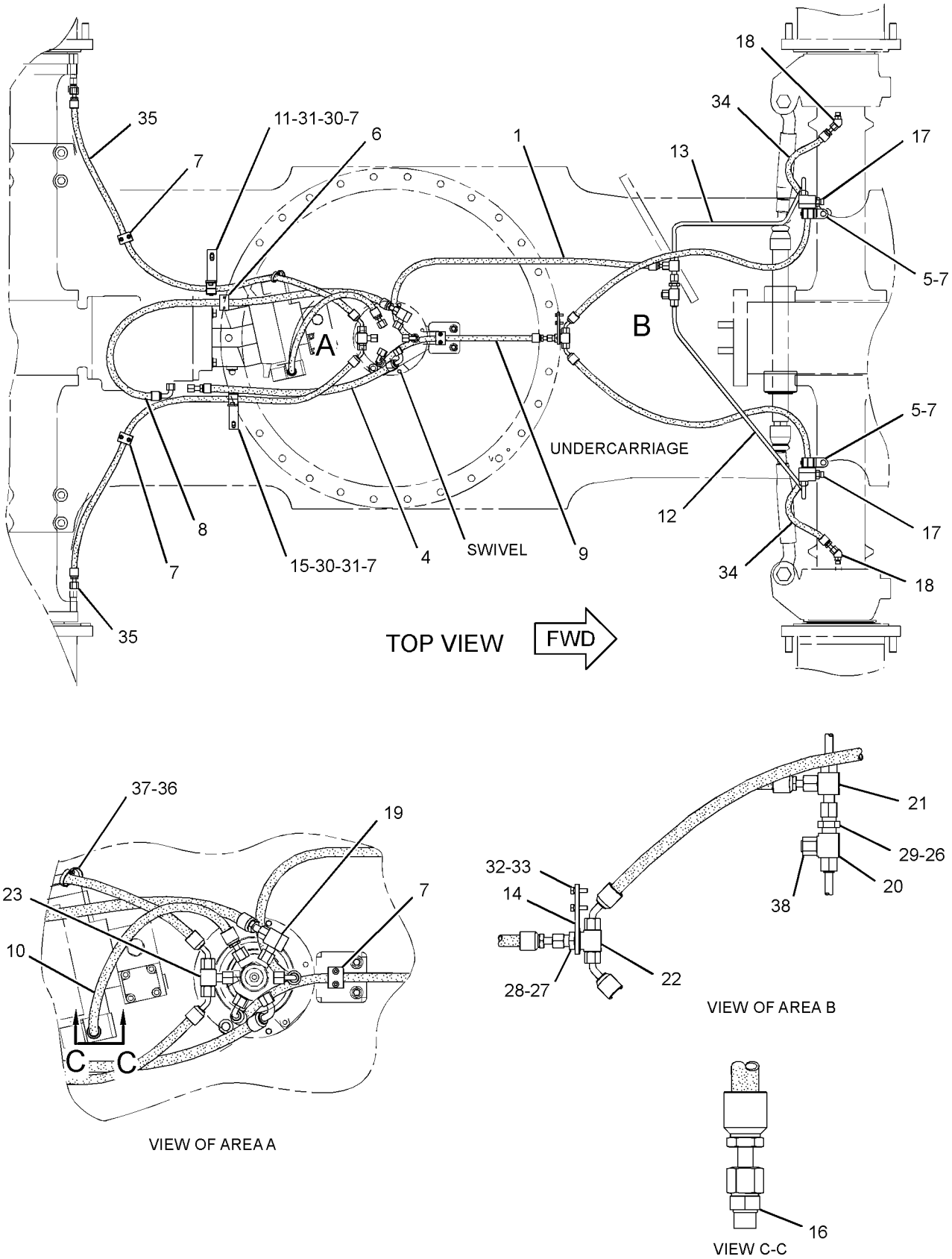

GRAPHIC #1 <END> g03020776

475-2050 LINES GP-HYDRAULIC

S/N: CH91-UP
PART OF 449-2784 HYDRAULIC AR
ALSO AN ATTACHMENT

SMCS-5057 **i06758730**

NOTE	REF NO	GRAPHIC REF	PART NUMBER	QTY	PART NAME 1 2 3 4 5 6 (PRODUCT LEVEL)	SEE PAGE
	1	1	**8U-0215**	1	SEAL-O-RING	
	2	1	**144-6060**	1	ORIFICE	
	3	1	**144-8070**	1	TEE	
I	4	1	**146-9039**	1	HOSE AS	
I	5	1	**156-1785**	1	HOSE AS	
	6	1	**197-9995**	1	FLANGE (90-DEG)	
I	7	1	**208-7047**	1	HOSE AS	
	8	1	**443-1359**	1	FILTER GP-ENGINE OIL (PILOT)	
		1	**442-0106**	2	ELEMENT AS	
		1	**442-0107**	2	HOUSING AS-FILTER	
		1	**452-2557**	2	BASE-OIL FILTER	
M	9	1	**105-3486**	2	BOLT-SOCKET HEAD (M6X1X50-MM)	
M	10	1	**105-3487**	2	BOLT-SOCKET HEAD (M6X1X20-MM)	
	11	1	*148-8336*	11	CONNECTOR AS	
					(EACH INCLUDES)	
		1	**3J-1907**	1	SEAL-O-RING	
		1	**6V-8397**	1	SEAL-O-RING	
		1	**6V-8636**	1	CONNECTOR	
	12	1	*148-8340*	2	CONNECTOR AS	
					(EACH INCLUDES)	
		1	**3K-0360**	1	SEAL-O-RING	
		1	**6V-8398**	1	SEAL-O-RING	
		1	**6V-8639**	1	CONNECTOR	
	13	1	*148-8345*	3	CONNECTOR AS	
					(EACH INCLUDES)	
		1	**2M-9780**	1	SEAL-O-RING	
		1	**6V-8398**	1	SEAL-O-RING	
		1	**6V-8638**	1	CONNECTOR	
	14	1	*148-8367*	1	ELBOW AS	
		1	**6V-8397**	1	SEAL-O-RING	
		1	**6V-9850**	1	ELBOW	
	15	1	*148-8372*	1	ELBOW AS	
		1	**2M-9780**	1	SEAL-O-RING	
		1	**6V-8398**	1	SEAL-O-RING	
		1	**6V-8721**	1	ELBOW	
	16	1	*148-8378*	10	ELBOW AS	
					(EACH INCLUDES)	
		1	**3J-1907**	1	SEAL-O-RING	
		1	**6V-8397**	1	SEAL-O-RING	
		1	**6V-8724**	1	ELBOW	
	17	1	*148-8391*	1	ELBOW AS	
		1	**2S-4078**	1	SEAL-O-RING	
		1	**5K-9090**	1	SEAL-O-RING	
		1	**8T-8987**	1	ELBOW	
	18	1	*148-8435*	1	TEE AS	
		1	**3J-1907**	1	SEAL-O-RING	
		1	**6V-8397**	2	SEAL-O-RING	

475-2050 **LINES GP-HYDRAULIC (**contd.**)** **i06758730**

NOTE	REF NO	GRAPHIC REF	PART NUMBER	QTY	PART NAME 1 2 3 4 5 6 (PRODUCT LEVEL)	SEE PAGE
		1	**6V-8781**	1	TEE	
	19	1	**5K-9090**	1	SEAL-O-RING	
	20	1	**6V-8397**	3	SEAL-O-RING	
	21	1	**8T-4224**	4	WASHER-HARD (8.8X16X2-MM THK)	
M	22	1	**8T-4908**	4	BOLT (M8X1.25X25-MM)	
	23	1	**8T-6725**	1	CONNECTOR	
	24	1	**8T-6850**	1	SEAL-O-RING	
I	25	1	**133-2154**	2	HOSE AS	

I - REFER TO HYDRAULIC INFORMATION SYSTEM
M - METRIC PART

475-2050 **LINES GP-HYDRAULIC** (contd.) **i06758730**

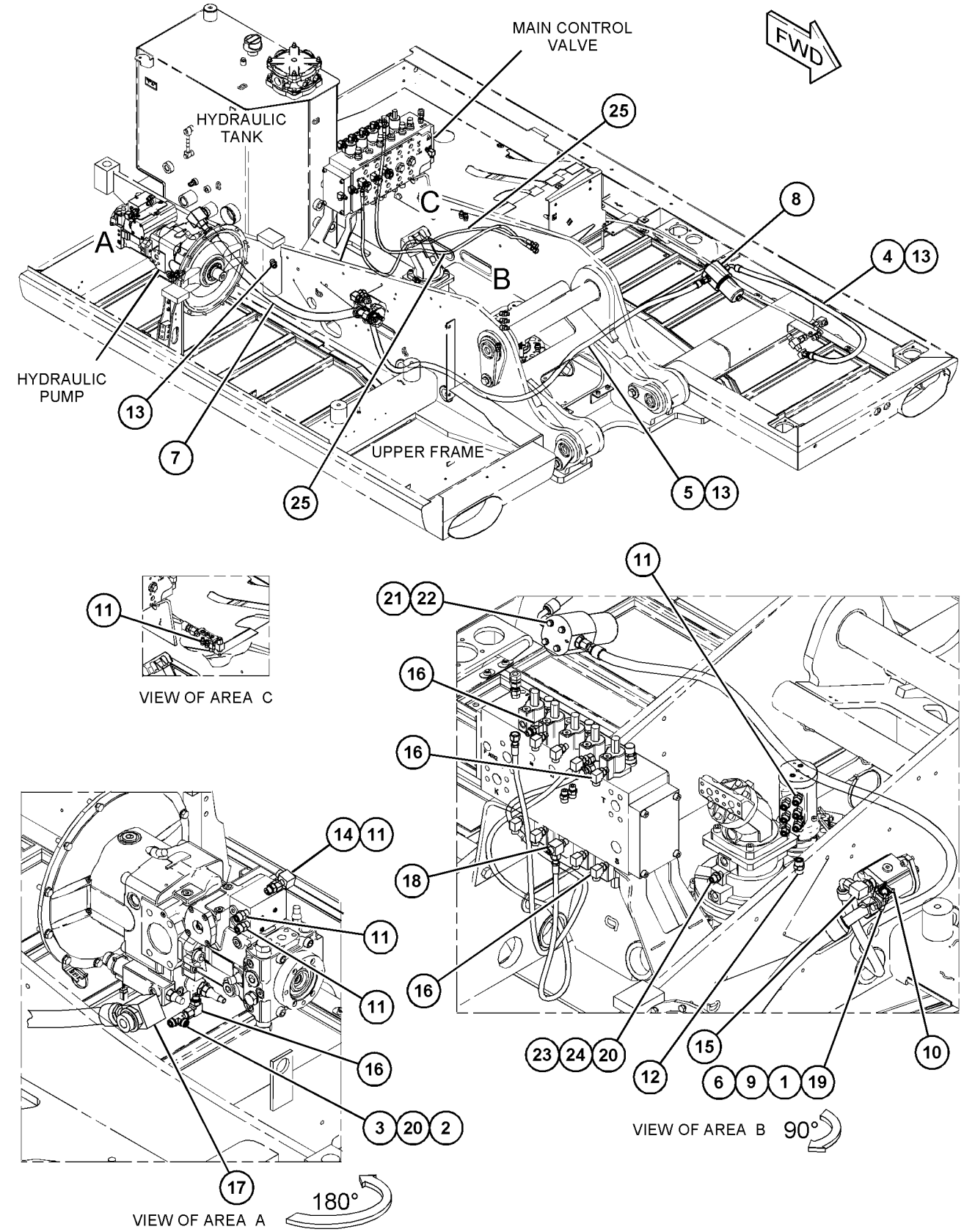

GRAPHIC #1 <END> g06133122

272-2773 LINES GP-HYDRAULIC FAN

S/N: CH91-UP
PART OF 454-7364 COOLING AR
ALSO AN ATTACHMENT

SMCS-1386, 1387, 5057 **i05934410**

NOTE	REF NO	GRAPHIC REF	PART NUMBER	QTY	PART NAME 1 2 3 4 5 6 (PRODUCT LEVEL)	SEE PAGE
	1	1	**8U-0235**	1	ELBOW	
	2	1	**8U-0236**	1	ADAPTER	
	3	1	**8U-0241**	1	ADAPTER-HOSE	
I	4	1	**110-1991**	1	HOSE AS	
	5	1	**114-9324**	1	CLAMP-SINGLE	
	6	1	**140-1983**	6	CLAMP-SINGLE	
	7	1	**168-9604**	1	HOSE AS	
I	8	2	**196-8427**	1	HOSE AS	
	9	1	**197-9995**	1	FLANGE (90-DEG)	
	10	2	**199-8026**	2	GROMMET	
I	11	1	**203-1930**	1	HOSE AS	
	12	1	**205-3930**	1	CONNECTOR AS	
		1	**205-3931**	1	SEAL	
		1	**6V-8397**	1	SEAL-O-RING	
I	13	2	**208-9756**	1	HOSE AS	
	14	2	**227-6000**	1	FILTER GP-OIL (HYDRAULIC) (FAN MOTOR)	
		2	**229-2800**	1	FILTER ELEMENT AS-OIL (HYDRAULIC) (FAN MOTOR)	
		2	**085-7539**	1	SEAL-O-RING	
		2	**229-2801**	1	HOUSING-FILTER	
	15	1	**329-2391**	1	TUBE AS	
	16	1	**329-2390**	1	TUBE AS	
I	17	1	**276-3461**	1	HOSE AS	
	18	2	**276-5271**	1	HOSE AS	
M	19	1	**289-4232**	3	BOLT (M6X1X16-MM)	
M	20	1	**101-7404**	8	BOLT-SOCKET HEAD (M10X1.5X30-MM)	
M	21	1	**105-3486**	2	BOLT-SOCKET HEAD (M6X1X50-MM)	
M	22	1	**105-3487**	10	BOLT-SOCKET HEAD (M6X1X20-MM)	
M	23	1	**136-1613**	2	BOLT-SOCKET HEAD (M6X1X30-MM)	
	24	1	*148-8345*	1	CONNECTOR AS	
		1	**2M-9780**	1	SEAL-O-RING	
		1	**6V-8398**	1	SEAL-O-RING	
		1	**6V-8638**	1	CONNECTOR	
	25	2	*148-8354*	1	ELBOW AS	
		2	**3K-0360**	1	SEAL-O-RING	
		2	**6V-8398**	1	SEAL-O-RING	
		2	**6V-9002**	1	ELBOW	
	26	2	*148-8355*	1	ELBOW AS	
		2	**5K-9090**	1	SEAL-O-RING	
		2	**6V-9005**	1	ELBOW	
		2	**7M-8485**	1	SEAL-O-RING	
	27	2	*148-8375*	1	ELBOW AS	
		2	**6V-8398**	2	SEAL-O-RING	
		2	**6V-8981**	1	ELBOW	
	28	1	*148-8414*	1	REDUCER AS	
		1	**6V-8943**	1	REDUCER	
		1	**7J-9108**	1	SEAL-O-RING	

272-2773 **LINES GP-HYDRAULIC FAN (**contd.**)** **i05934410**

NOTE	REF NO	GRAPHIC REF	PART NUMBER	QTY	PART NAME 1 2 3 4 5 6 (PRODUCT LEVEL)	SEE PAGE
	29	2	*148-8415*	1	REDUCER AS	
		2	**6V-8397**	1	SEAL-O-RING	
		2	**6V-8936**	1	REDUCER	
	30	2	*148-8444*	1	TEE AS-SWIVEL	
		2	**6V-8398**	2	SEAL-O-RING	
		2	**6V-9837**	1	TEE-SWIVEL	
	31	2	*150-4044*	1	CONNECTOR AS	
		2	**3J-1907**	1	SEAL-O-RING	
		2	**6V-8397**	1	SEAL-O-RING	
		2	**8T-1779**	1	CONNECTOR	
	32	2	*171-6728*	1	ELBOW AS	
		2	**3K-0360**	1	SEAL-O-RING	
		2	**8T-0249**	1	ELBOW (SWIVEL)	
	33	2	**1M-4543**	1	GROMMET	
	34	2	**1P-4578**	2	FLANGE-HALF	
	35	1	**4J-0520**	2	SEAL-O-RING	
	36	2	**4J-0522**	1	SEAL-O-RING	
	37	1	**5K-9090**	3	SEAL-O-RING	
	38	1	**6V-8398**	2	SEAL-O-RING	
	39	1	**6V-9169**	1	NUT (13/16-16-THD)	
	40	1	**6V-9746**	2	SEAL-O-RING	
	41	1	**8J-1256**	1	CLIP (LOOP)	
	42	2	**8T-4121**	4	WASHER-HARD (11X21X2.5-MM THK)	
M	43	2	**8T-4196**	4	BOLT (M10X1.5X35-MM)	
	44	1	**8T-8899**	1	ELBOW	
	45	1	**8U-0215**	2	SEAL-O-RING	
	46	1	**8U-0216**	2	SEAL-O-RING	
	47	2	**9X-7345**	1	GROMMET	

I - REFER TO HYDRAULIC INFORMATION SYSTEM
M - METRIC PART

272-2773 **LINES GP-HYDRAULIC FAN (**contd.**)** **i05934410**

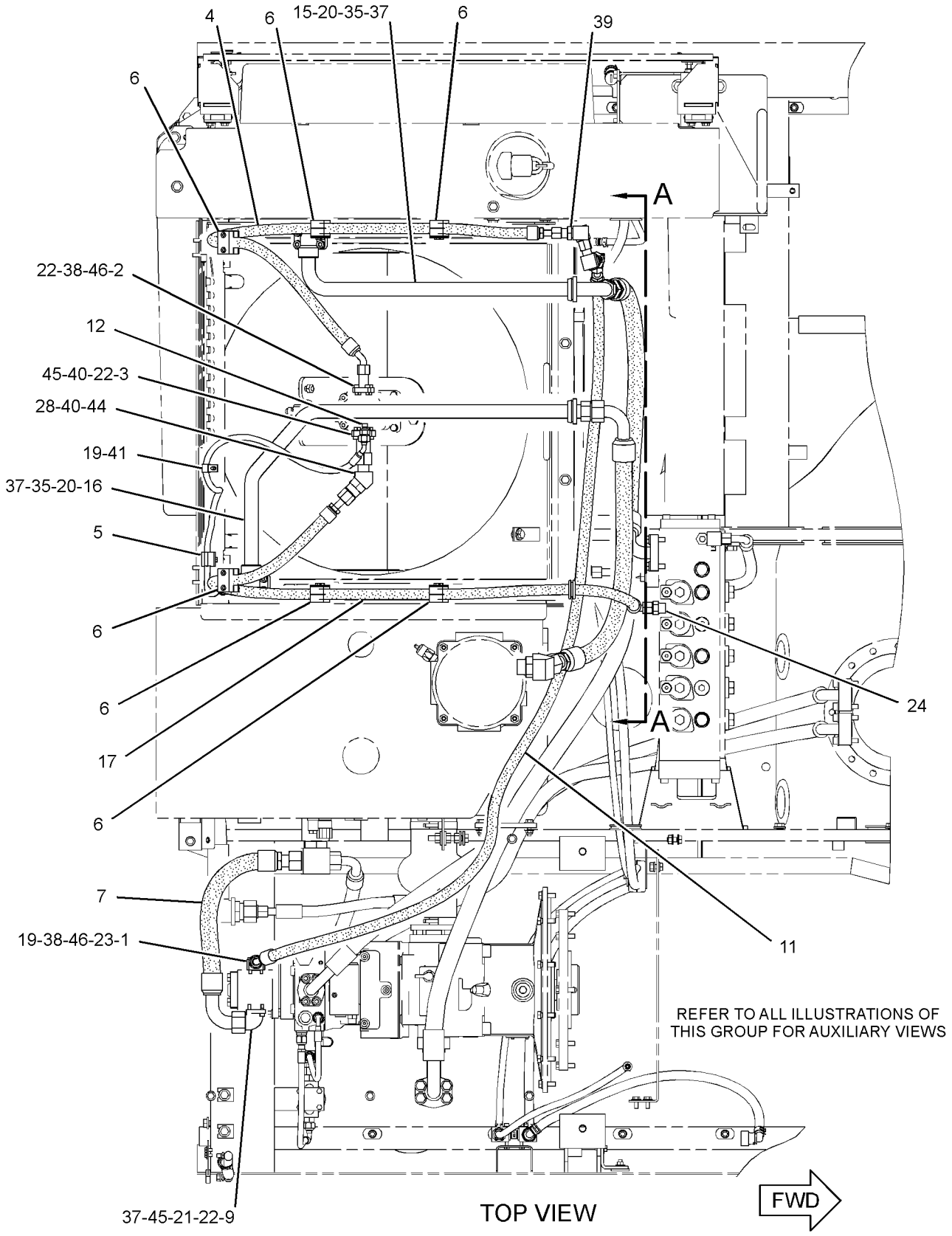

GRAPHIC #1 g02382519

272-2773 **LINES GP-HYDRAULIC FAN (**contd.**)** **i05934410**

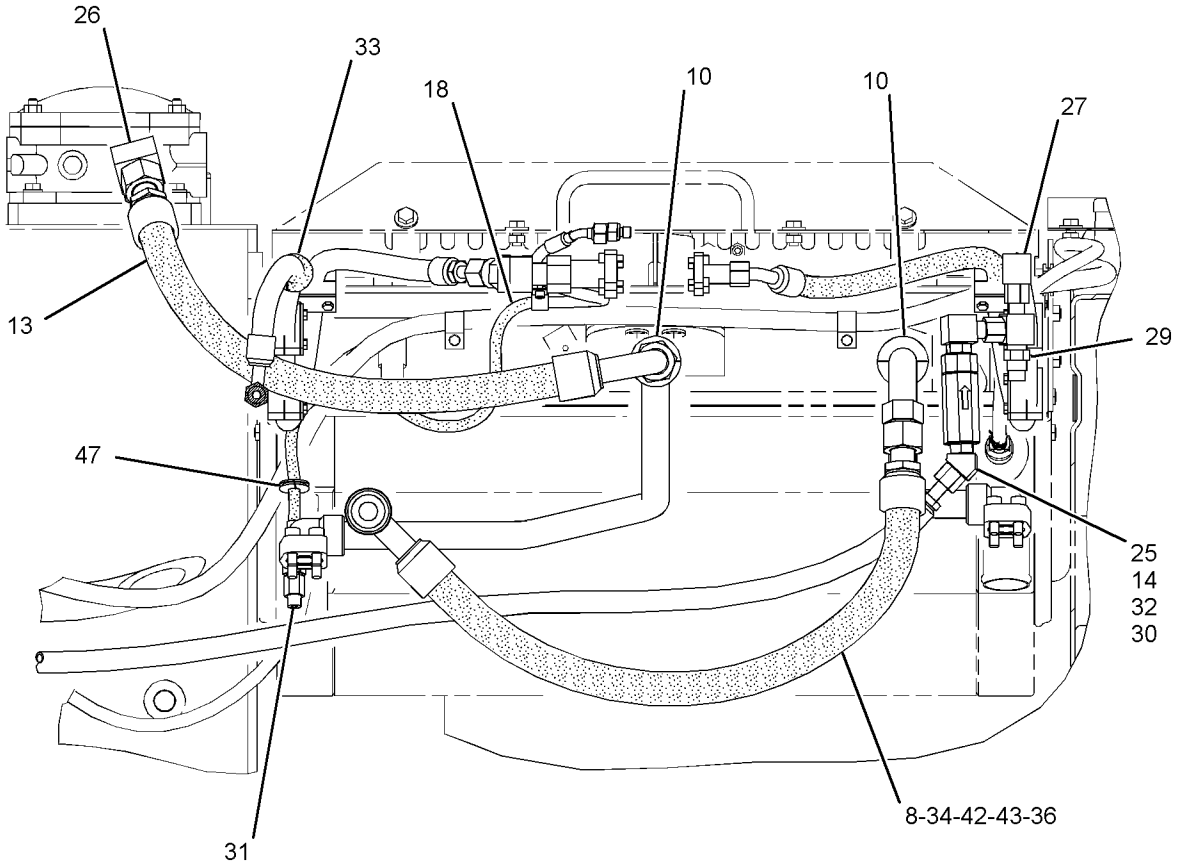

SECTION A-A

GRAPHIC #2 <END> g01322511

475-2054 LINES GP-HYDRAULIC FAN

S/N: CH91-UP
PART OF 454-7364 COOLING AR
ALSO AN ATTACHMENT

SMCS-1386, 1387, 5057 **i06806958**

NOTE	REF NO	GRAPHIC REF	PART NUMBER	QTY	PART NAME 1 2 3 4 5 6 (PRODUCT LEVEL)	SEE PAGE
	1	1	**7K-1181**	2	STRAP-CABLE	
	2	1	**8U-0215**	2	SEAL-O-RING	
	3	1	**8U-0216**	2	SEAL-O-RING	
	4	1	**8U-0235**	1	ELBOW	
	5	1	**8U-0236**	1	ADAPTER	
	6	1	**8U-0241**	1	ADAPTER-HOSE	
	7	1	**114-9324**	1	CLAMP-SINGLE	
	8	1	**140-1983**	6	CLAMP-SINGLE	
I	9	1	**110-1991**	1	HOSE AS	
	10	1	**168-9604**	1	HOSE AS	
I	11	1	**196-8427**	1	HOSE AS	
	12	1	**197-9995**	1	FLANGE (90-DEG)	
	13	1	**199-8026**	2	GROMMET	
I	14	1	**203-1930**	1	HOSE AS	
	15	1	*205-3930*	1	CONNECTOR AS	
		1	**6V-8397**	1	SEAL-O-RING	
		1	**205-3931**	1	SEAL	
		1	**398-5646**	1	CONNECTOR	
I	16	1	**208-9756**	1	HOSE AS	
I	17	1	**276-3461**	1	HOSE AS	
	18	1	**276-5271**	1	HOSE AS	
M	19	1	**289-4232**	3	BOLT (M6X1X16-MM)	
	20	1	**329-2390**	1	TUBE AS	
	21	1	**329-2391**	1	TUBE AS	
	22	1	**443-1366**	1	FILTER AS-OIL	
M	23	1	**101-7404**	8	BOLT-SOCKET HEAD (M10X1.5X30-MM)	
M	24	1	**105-3486**	2	BOLT-SOCKET HEAD (M6X1X50-MM)	
M	25	1	**105-3487**	10	BOLT-SOCKET HEAD (M6X1X20-MM)	
M	26	1	**136-1613**	2	BOLT-SOCKET HEAD (M6X1X30-MM)	
	27	1	*148-8345*	1	CONNECTOR AS	
		1	**2M-9780**	1	SEAL-O-RING	
		1	**6V-8398**	1	SEAL-O-RING	
		1	**6V-8638**	1	CONNECTOR	
	28	1	*148-8354*	1	ELBOW AS	
		1	**3K-0360**	1	SEAL-O-RING	
		1	**6V-8398**	1	SEAL-O-RING	
		1	**6V-9002**	1	ELBOW	
	29	1	*148-8355*	1	ELBOW AS	
		1	**5K-9090**	1	SEAL-O-RING	
		1	**6V-9005**	1	ELBOW	
		1	**7M-8485**	1	SEAL-O-RING	
	30	1	*148-8375*	1	ELBOW AS	
		1	**6V-8398**	2	SEAL-O-RING	
		1	**6V-8981**	1	ELBOW	
	31	1	*148-8414*	1	REDUCER AS	
		1	**6V-8943**	1	REDUCER	

475-2054 **LINES GP-HYDRAULIC FAN (**contd.**)** **i06806958**

NOTE	REF NO	GRAPHIC REF	PART NUMBER	QTY	PART NAME 1 2 3 4 5 6 (PRODUCT LEVEL)	SEE PAGE
		1	**7J-9108**	1	SEAL-O-RING	
	32	1	*148-8415*	1	REDUCER AS	
		1	**6V-8397**	1	SEAL-O-RING	
		1	**6V-8936**	1	REDUCER	
	33	1	*148-8444*	1	TEE AS-SWIVEL	
		1	**6V-8398**	2	SEAL-O-RING	
		1	**6V-9837**	1	TEE-SWIVEL	
	34	1	*150-4044*	1	CONNECTOR AS	
		1	**3J-1907**	1	SEAL-O-RING	
		1	**6V-8397**	1	SEAL-O-RING	
		1	**8T-1779**	1	CONNECTOR	
	35	1	*171-6728*	1	ELBOW AS	
		1	**3K-0360**	1	SEAL-O-RING	
		1	**8T-0249**	1	ELBOW (SWIVEL)	
	36	1	**1M-4543**	1	GROMMET	
	37	1	**1P-4578**	2	FLANGE-HALF	
	38	1	**206-2423**	1	SADDLE-MOUNTING	
	39	1	**4J-0520**	2	SEAL-O-RING	
	40	1	**4J-0522**	1	SEAL-O-RING	
	41	1	**5K-9090**	3	SEAL-O-RING	
	42	1	**6V-8398**	2	SEAL-O-RING	
	43	1	**6V-9169**	1	NUT (13/16-16-THD)	
	44	1	**6V-9746**	2	SEAL-O-RING	
	45	1	**8J-1256**	1	CLIP (LOOP)	
	46	1	**8T-4121**	4	WASHER-HARD (11X21X2.5-MM THK)	
M	47	1	**8T-4196**	4	BOLT (M10X1.5X35-MM)	
	48	1	**8T-8899**	1	ELBOW	
	49	1	**9X-7345**	1	GROMMET	

I - REFER TO HYDRAULIC INFORMATION SYSTEM
M - METRIC PART

475-2054 **LINES GP-HYDRAULIC FAN** (contd.) **i06806958**

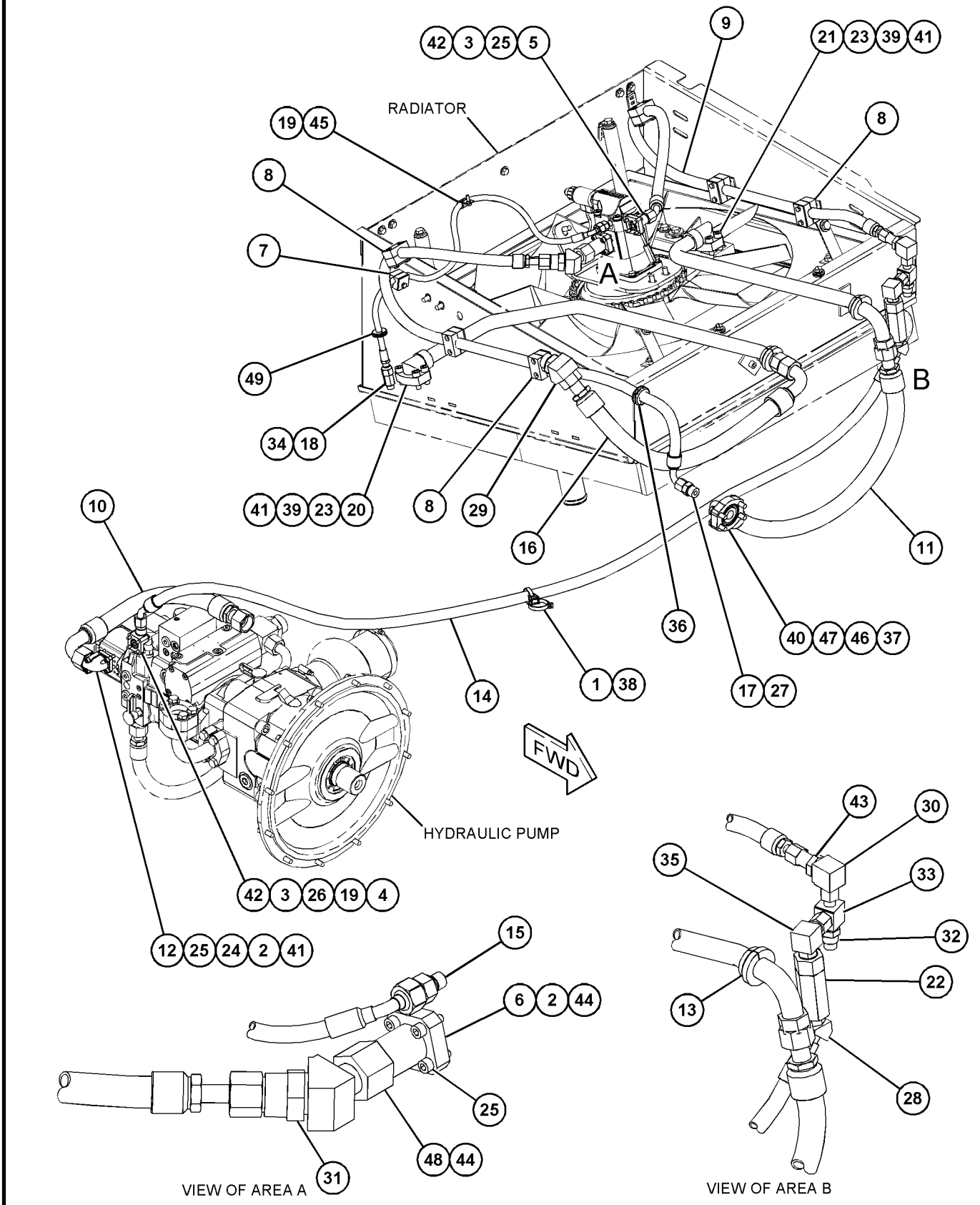

GRAPHIC #1 <END> g06138120

298-4409 LINES GP-LOAD CONTROL VALVE

S/N: CH91-UP
PART OF 425-9134 VALVE & LINES AR
AN ATTACHMENT

SMCS-5057, 5811 **i05492873**

NOTE	REF NO	GRAPHIC REF	PART NUMBER	QTY	PART NAME 1 2 3 4 5 6 (PRODUCT LEVEL)	SEE PAGE
I	1	1	**130-8155**	1	HOSE AS	
	2	1	*148-8336*	1	CONNECTOR AS	
		1	**3J-1907**	1	SEAL-O-RING	
		1	**6V-8397**	1	SEAL-O-RING	
		1	**6V-8636**	1	CONNECTOR	
	3	1	*148-8367*	1	ELBOW AS	
		1	**6V-8397**	1	SEAL-O-RING	
		1	**6V-9850**	1	ELBOW	

I - REFER TO HYDRAULIC INFORMATION SYSTEM

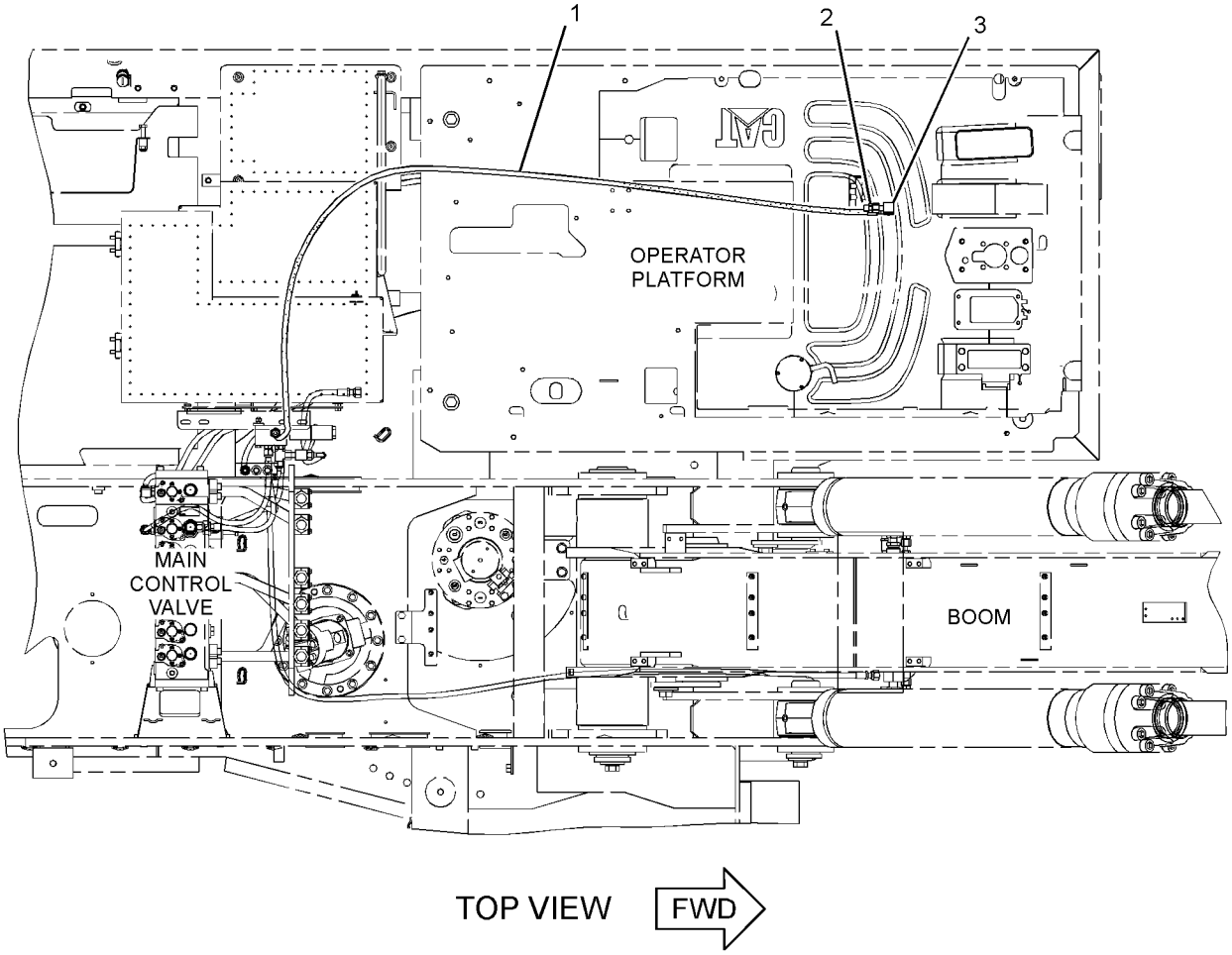

GRAPHIC #1 <END> g01330585

340-0397 LINES GP-LOAD CONTROL VALVE—STICK CYLINDER, VAR ADJ BOOM

S/N: CH91-UP
AN ATTACHMENT

SMCS-5057, 5811 **i05921173**

NOTE	REF NO	GRAPHIC REF	PART NUMBER	QTY	PART NAME 1 2 3 4 5 6 (PRODUCT LEVEL)	SEE PAGE
	1	1	**5W-9857**	2	FLANGE-HALF	
M	2	1	**105-3478**	6	BOLT-SOCKET HEAD (M10X1.5X35-MM)	
	3	1	**116-7286**	1	CLAMP-SINGLE	
	4	1	**135-4990**	1	CLAMP-SINGLE	
	5	1	**151-8865**	1	ELBOW	
	6	1	**151-8866**	1	ELBOW	
I	7	1	**185-6791**	1	HOSE AS	
I	8	1	**185-6792**	1	HOSE AS	
I	9	1	**185-6793**	1	HOSE AS	
	10	1	**187-5076**	1	CLAMP AS	
	11	1	**187-5079**	2	PLATE AS	
	12	1	**189-2059**	1	PLATE AS	
	13	1	**189-2060**	1	PLATE AS	
	14	1	**189-2062**	2	PLATE AS	
I	15	1	**190-8552**	1	HOSE AS	
I	16	1	**191-1641**	1	HOSE AS	
	17	1	*194-9391*	5	CLAMP GP-HYDRAULIC LINES	
					(EACH INCLUDES)	
		1	**187-5081**	1	SPACER (12.8X20X49-MM THK)	
		1	**189-2055**	1	PLATE	
		1	**194-9397**	2	CLAMP	
	18	1	*194-9396*	1	CLAMP GP-HYDRAULIC LINES	
		1	**194-9394**	2	CLAMP	
		1	**194-9395**	1	PLATE	
	19	1	*263-5618*	4	CLAMP AS (SINGLE)	
					(EACH INCLUDES)	
		1	**263-5132**	2	CLAMP	
		1	**263-5133**	2	GROMMET	
	20	1	*263-7038*	1	CLAMP GP-HYDRAULIC LINES	
		1	**263-5132**	2	CLAMP	
		1	**263-6337**	2	GROMMET	
	21	1	*263-7116*	3	CLAMP AS	
					(EACH INCLUDES)	
		1	**263-5130**	2	CLAMP-SINGLE	
		1	**263-6336**	2	GROMMET	
	22	1	**283-9146**	1	PLATE AS	
	23	1	**283-9147**	1	PLATE AS	
	24	1	**329-2373**	1	TUBE AS	
	25	1	**329-2374**	1	TUBE AS	
	26	1	*340-3050*	6	CLAMP GP-HYDRAULIC LINES	
					(EACH INCLUDES)	
		1	**194-9389**	1	PLATE	
		1	**340-3049**	2	CLAMP	
	27	1	**340-3060**	1	TUBE AS	
	28	1	**364-8088**	1	VALVE GP-CHECK (PILOT OPERATED) (STICK CYLINDER)	
		1	**4J-5267**	1	SEAL-O-RING	

340-0397 **LINES GP-LOAD CONTROL VALVE (**contd.**)** **i05921173**

NOTE	REF NO	GRAPHIC REF	PART NUMBER	QTY	PART NAME 1 2 3 4 5 6 (PRODUCT LEVEL)	SEE PAGE
	29	1	**386-1188**	1	VALVE GP-SHUTTLE (STICK CYLINDER) (STICK CYLINDER)	
		1	**3E-4298**	1	SEAL-O-RING	
		1	**161-6154**	1	SEAL-O-RING	
M	30	1	**101-7398**	12	BOLT-SOCKET HEAD (M10X1.5X40-MM)	
M	31	1	**101-7404**	24	BOLT-SOCKET HEAD (M10X1.5X30-MM)	
	32	1	*148-8336*	1	CONNECTOR AS	
		1	**3J-1907**	1	SEAL-O-RING	
		1	**6V-8397**	1	SEAL-O-RING	
		1	**6V-8636**	1	CONNECTOR	
	33	1	*148-8341*	1	CONNECTOR AS	
		1	**3D-2824**	1	SEAL-O-RING	
		1	**6V-8713**	1	CONNECTOR	
		1	**7J-9108**	1	SEAL-O-RING	
	34	1	*156-4282*	1	REDUCER AS	
		1	**6V-8397**	1	SEAL-O-RING	
		1	**6V-8938**	1	REDUCER	
	35	1	**4J-5267**	3	SEAL-O-RING	
	36	1	**5K-9090**	3	SEAL-O-RING	
	37	1	**5P-7466**	1	CLIP (SLOT)	
	38	1	**5P-7467**	1	CLIP (TAB)	
	39	1	**5P-7468**	1	CLIP (SLOT)	
	40	1	**5P-7469**	1	CLIP (TAB)	
	41	1	**5P-8112**	1	GROMMET	
	42	1	**5P-8444**	1	GROMMET (37-MM ID)	
	43	1	**6V-9746**	4	SEAL-O-RING	
B	44	1	**7K-1181**	6	STRAP-CABLE	
M	45	1	**7X-2533**	12	BOLT (M6X1X35-MM)	
M	46	1	**7X-2534**	4	BOLT (M6X1X50-MM)	
	47	1	**7X-7729**	2	WASHER (11X25X3-MM THK)	
M	48	1	**7Y-7992**	10	BOLT (M12X1.75X75-MM)	
	49	1	**8T-4121**	12	WASHER-HARD (11X21X2.5-MM THK)	
M	50	1	**8T-4136**	4	BOLT (M10X1.5X25-MM)	
M	51	1	**8T-4137**	2	BOLT (M10X1.5X20-MM)	
	52	1	**9X-6581**	1	NUT-O-RING SEAL (1-14-THD)	
I	53	1	**190-8544**	2	HOSE AS	

B - USE AS REQUIRED
I - REFER TO HYDRAULIC INFORMATION SYSTEM
M - METRIC PART

340-0397 **LINES GP-LOAD CONTROL VALVE (**contd.**)** **i05921173**

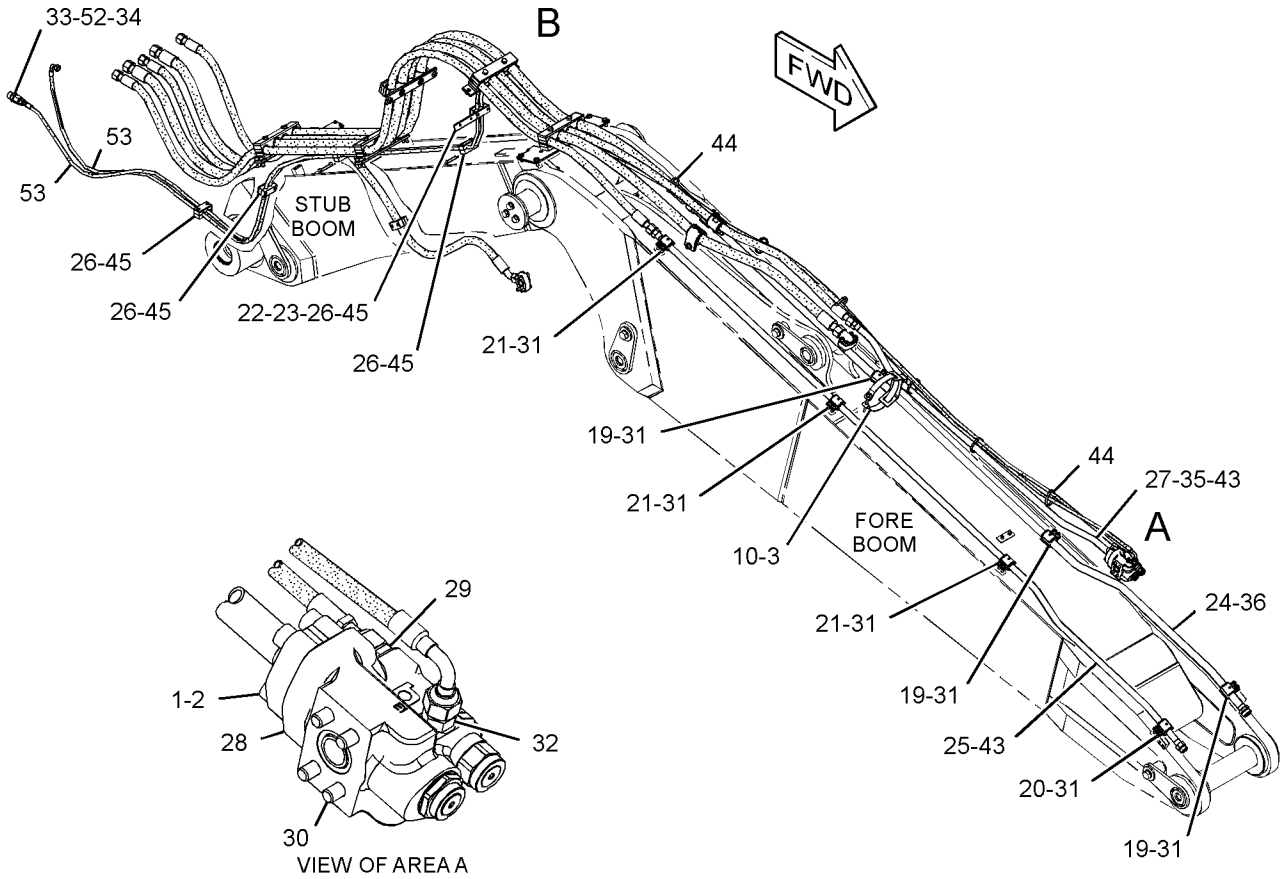

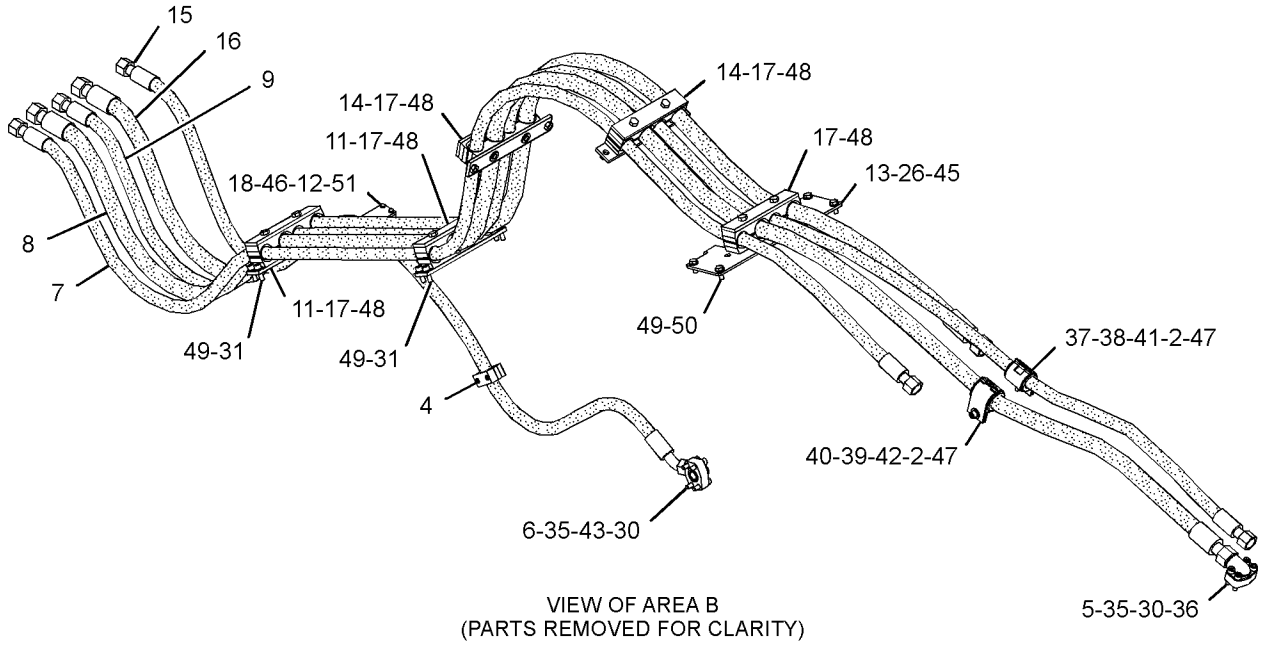

VIEW OF AREA B
(PARTS REMOVED FOR CLARITY)

GRAPHIC #1 <END> g03067259

340-3056 LINES GP-LOAD CONTROL VALVE—BOOM CYLINDER

S/N: CH91-UP

PART OF 453-3004, 453-3005 VALVE & LINES AR

AN ATTACHMENT

SMCS-5057, 5811 **i05937844**

NOTE	REF NO	GRAPHIC REF	PART NUMBER	QTY	PART NAME 1 2 3 4 5 6 (PRODUCT LEVEL)	SEE PAGE
M	1	1	**101-7398**	8	BOLT-SOCKET HEAD (M10X1.5X40-MM)	
M	2	1	**101-7399**	4	BOLT-SOCKET HEAD (M10X1.5X120-MM)	
I	3	1	**129-4682**	1	HOSE AS	
I	4	1	**130-1153**	1	HOSE AS	
I	5	1	**139-1942**	1	HOSE AS	
	6	1	**139-4016**	2	INSERT-RUBBER	
	7	1	**142-7425**	1	TUBE AS	
	8	1	*148-8424*	1	TEE AS	
		1	**6V-8397**	1	SEAL-O-RING	
		1	**8T-8902**	1	ADAPTER-TEE	
I	9	1	**185-6807**	1	HOSE AS	
I	10	1	**185-6808**	1	HOSE AS	
	11	1	**185-6810**	1	CLAMP AS	
	12	1	**187-5078**	1	CLAMP AS	
	13	1	**200-6181**	1	PLATE AS	
	14	1	**201-7153**	1	PLATE AS	
I	15	1	**203-1911**	1	HOSE AS	
I	16	1	**203-1920**	1	HOSE AS	
	17	1	**206-2423**	1	SADDLE-MOUNTING	
I	18	1	**212-6763**	1	HOSE AS	
I	19	1	**230-8022**	1	HOSE AS	
	20	1	**266-0982**	1	GUARD	
	21	1	**288-3658**	1	CLAMP-SINGLE	
	22	1	*340-3050*	2	CLAMP GP-HYDRAULIC LINES	
					(EACH INCLUDES)	
		1	**194-9389**	1	PLATE	
		1	**340-3049**	2	CLAMP	
I	23	1	**340-3419**	1	HOSE AS	
	24	1	**349-1178**	1	SENSOR-PRESSURE (OVERLOAD WARNING)	
	25	1	**380-2625**	1	VALVE GP-FLOW CONTROL (BOOM LOWERING CONTROL, LH)	
	26	1	**380-2626**	1	VALVE GP-FLOW CONTROL (BOOM LOWERING CONTROL, RH)	
					(EACH VALVE GP INCLUDES)	
		1	**3J-1907**	1	SEAL-O-RING	
		1	**161-6154**	1	SEAL-O-RING	
	27	1	**381-5002**	1	TUBE AS	
	28	1	**384-4717**	1	VALVE GP-CHECK (BOOM LOWERING CONTROL, LH)	
	29	1	**384-4718**	1	VALVE GP-CHECK (BOOM LOWERING CONTROL, RH)	
					(EACH VALVE GP INCLUDES)	
		1	**4J-5267**	1	SEAL-O-RING	
	30	1	**139-5751**	2	CLAMP-SINGLE	
	31	1	**140-7599**	1	CLAMP	
	32	1	*148-8327*	1	CONNECTOR AS	
		1	**3D-2824**	1	SEAL-O-RING	
		1	**6V-8637**	1	CONNECTOR	
		1	**6V-9746**	1	SEAL-O-RING	
	33	1	*148-8336*	3	CONNECTOR AS	

340-3056 **LINES GP-LOAD CONTROL VALVE (**contd.**)** **i05937844**

NOTE	REF NO	GRAPHIC REF	PART NUMBER	QTY	PART NAME 1 2 3 4 5 6 (PRODUCT LEVEL)	SEE PAGE
					(EACH INCLUDES)	
		1	**3J-1907**	1	SEAL-O-RING	
		1	**6V-8397**	1	SEAL-O-RING	
		1	**6V-8636**	1	CONNECTOR	
	34	1	*148-8341*	1	CONNECTOR AS	
		1	**3D-2824**	1	SEAL-O-RING	
		1	**6V-8713**	1	CONNECTOR	
		1	**7J-9108**	1	SEAL-O-RING	
	35	1	*148-8347*	1	ELBOW AS	
		1	**3D-2824**	1	SEAL-O-RING	
		1	**6V-9007**	1	ELBOW	
		1	**6V-9746**	1	SEAL-O-RING	
	36	1	*148-8367*	3	ELBOW AS	
					(EACH INCLUDES)	
		1	**6V-8397**	1	SEAL-O-RING	
		1	**6V-9850**	1	ELBOW	
	37	1	*148-8433*	2	TEE AS	
					(EACH INCLUDES)	
		1	**6V-8397**	2	SEAL-O-RING	
		1	**6V-9836**	1	TEE-SWIVEL	
	38	1	*148-8435*	1	TEE AS	
		1	**3J-1907**	1	SEAL-O-RING	
		1	**6V-8397**	2	SEAL-O-RING	
		1	**6V-8781**	1	TEE	
	39	1	*153-6237*	1	ELBOW AS	
		1	**3D-2824**	1	SEAL-O-RING	
		1	**6V-9004**	1	ELBOW	
		1	**6V-9746**	1	SEAL-O-RING	
	40	1	*156-4282*	1	REDUCER AS	
		1	**6V-8397**	1	SEAL-O-RING	
		1	**6V-8938**	1	REDUCER	
	41	1	**1P-3702**	3	SEAL-RECTANGULAR	
	42	1	**1P-3703**	2	SEAL-RECTANGULAR	
	43	1	**204-2281**	1	STRAP-CABLE	
	44	1	**230-7732**	1	MOUNTING-CABLE TIE	
M	45	1	**280-8912**	2	BOLT (M10X1.5X75-MM)	
	46	1	*304-8036*	1	CONNECTOR AS	
		1	**8T-8887**	1	CONNECTOR	
		1	**214-7568**	1	SEAL-O-RING	
		1	**228-7089**	1	SEAL-O-RING	
	47	1	**3J-1907**	1	SEAL-O-RING	
	48	1	**3S-2093**	1	STRAP-CABLE	
	49	1	**4J-5267**	1	SEAL-O-RING	
	50	1	**5K-9090**	2	SEAL-O-RING	
	51	1	**6V-0400**	4	FLANGE-HALF	
	52	1	**7K-1181**	4	STRAP-CABLE	
M	53	1	**8C-8451**	4	BOLT (M6X1X40-MM)	
	54	1	**8T-4121**	13	WASHER-HARD (11X21X2.5-MM THK)	
M	55	1	**8T-4171**	2	BOLT (M6X1X12-MM)	
M	56	1	**8T-4172**	3	BOLT (M10X1.5X80-MM)	
M	57	1	**8T-4182**	12	BOLT (M10X1.5X45-MM)	
M	58	1	**8T-4184**	8	BOLT (M12X1.75X45-MM)	

340-3056 **LINES GP-LOAD CONTROL VALVE (**contd.**)** **i05937844**

NOTE	REF NO	GRAPHIC REF	PART NUMBER	QTY	PART NAME 1 2 3 4 5 6 (PRODUCT LEVEL)	SEE PAGE
M	59	1	**8T-4185**	2	BOLT (M10X1.5X50-MM)	
	60	1	**8T-4223**	8	WASHER-HARD (13.5X25.5X3-MM THK)	
M	61	1	**8T-5005**	1	BOLT (M10X1.5X70-MM)	
	62	1	**8T-9403**	6	FLANGE-HALF	
	63	1	**9X-6581**	1	NUT-O-RING SEAL (1-14-THD)	

I - REFER TO HYDRAULIC INFORMATION SYSTEM
M - METRIC PART

340-3056 **LINES GP-LOAD CONTROL VALVE (**contd.**)** **i05937844**

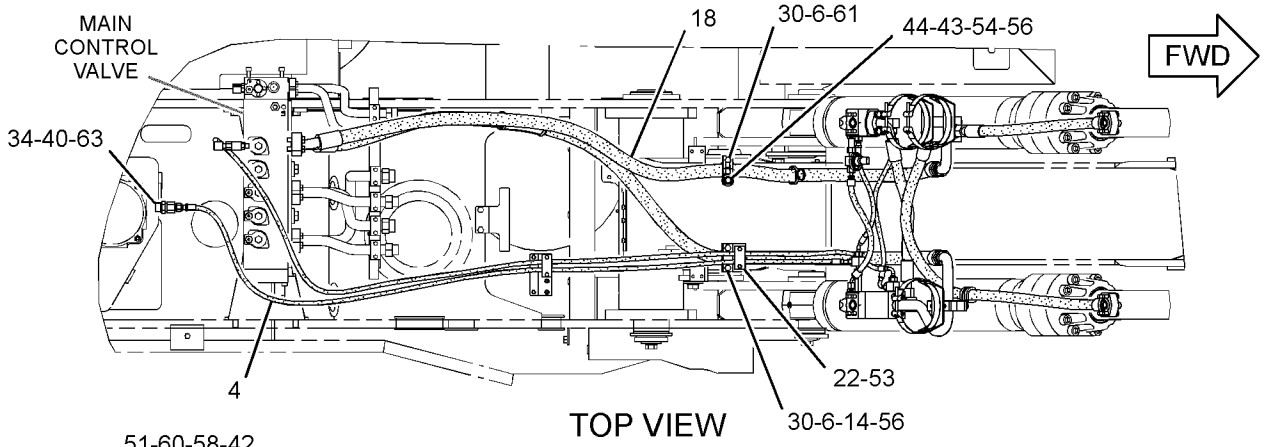

TOP VIEW

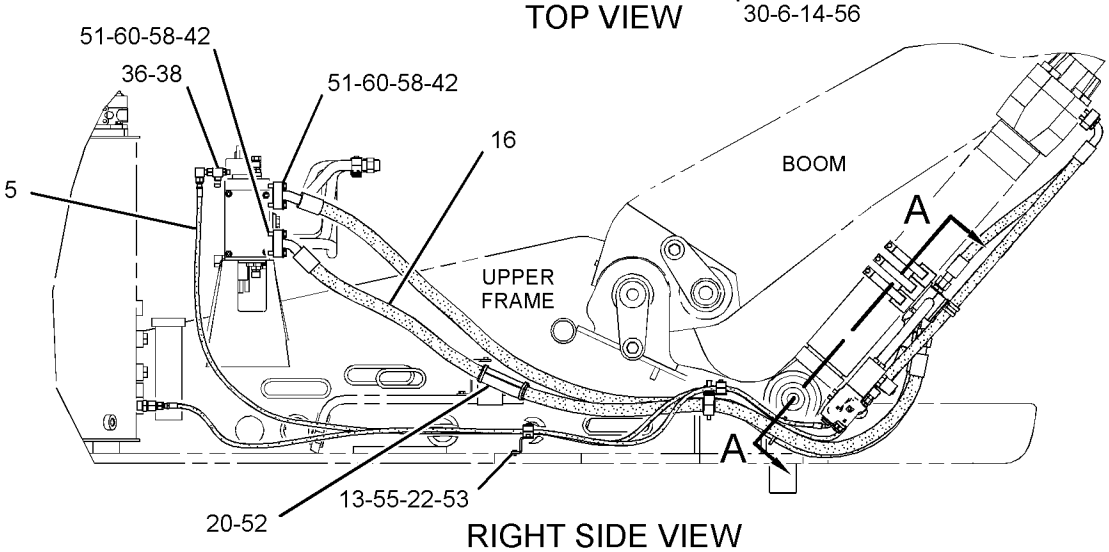

RIGHT SIDE VIEW

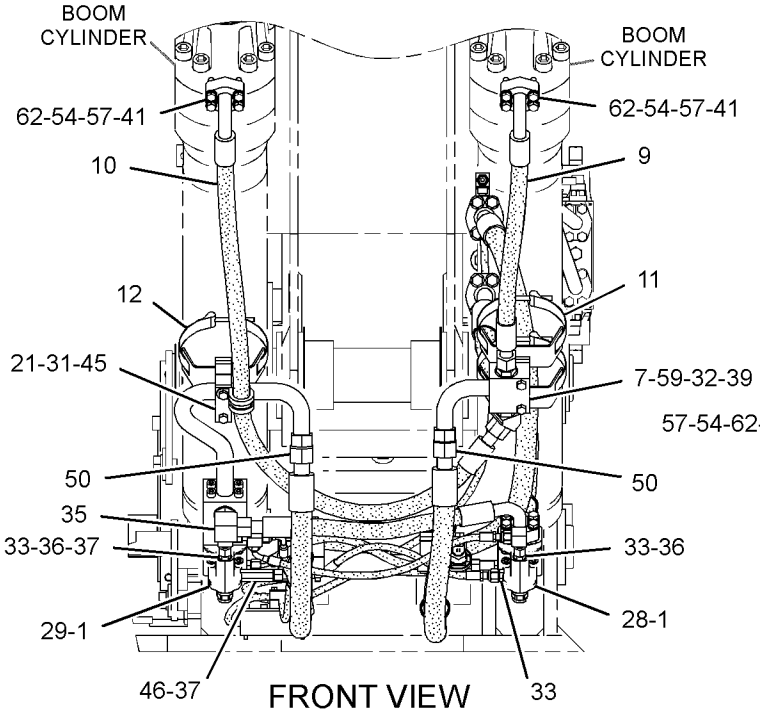

FRONT VIEW

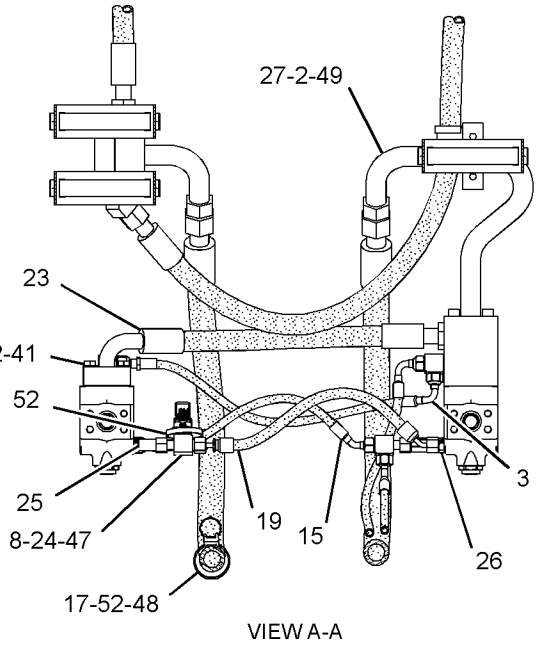

VIEW A-A

GRAPHIC #1 <END> g03046202

340-3073 LINES GP-LOAD CONTROL VALVE—BOOM CYLINDER

S/N: CH91-UP
PART OF 446-2738 VALVE & LINES AR
AN ATTACHMENT

SMCS-5057, 5811 **i05934671**

NOTE	REF NO	GRAPHIC REF	PART NUMBER	QTY	PART NAME 1 2 3 4 5 6 (PRODUCT LEVEL)	SEE PAGE
M	1	1	**101-7399**	4	BOLT-SOCKET HEAD (M10X1.5X120-MM)	
I	2	1	**129-4682**	1	HOSE AS	
I	3	1	**130-1153**	1	HOSE AS	
I	4	1	**139-1942**	1	HOSE AS	
	5	1	**139-4016**	2	INSERT-RUBBER	
	6	1	*148-8424*	1	TEE AS	
		1	**6V-8397**	1	SEAL-O-RING	
		1	**8T-8902**	1	ADAPTER-TEE	
I	7	1	**185-6807**	1	HOSE AS	
I	8	1	**185-6808**	1	HOSE AS	
	9	1	**185-6810**	1	CLAMP AS	
	10	1	**187-5078**	1	CLAMP AS	
	11	1	**200-6181**	1	PLATE AS	
	12	1	**201-7153**	1	PLATE AS	
I	13	1	**203-1911**	1	HOSE AS	
I	14	1	**203-1920**	1	HOSE AS	
	15	1	**206-2423**	1	SADDLE-MOUNTING	
I	16	1	**212-6763**	1	HOSE AS	
I	17	1	**230-8022**	1	HOSE AS	
	18	1	**266-0982**	1	GUARD	
	19	1	**288-3658**	1	CLAMP-SINGLE	
	20	1	*340-3050*	2	CLAMP GP-HYDRAULIC LINES	
					(EACH INCLUDES)	
		1	**194-9389**	1	PLATE	
		1	**340-3049**	2	CLAMP	
I	21	1	**340-3419**	1	HOSE AS	
	22	1	**349-1178**	1	SENSOR-PRESSURE (LOWERING CONTROL)	
	23	1	**380-2625**	1	VALVE GP-FLOW CONTROL (BOOM LOWERING CONTROL, LH)	
	24	1	**380-2626**	1	VALVE GP-FLOW CONTROL (BOOM LOWERING CONTROL, RH)	
					(EACH VALVE GP-FLOW CONTROL INCLUDES)	
		1	**3J-1907**	1	SEAL-O-RING	
		1	**161-6154**	1	SEAL-O-RING	
	25	1	**381-5002**	1	TUBE AS	
	26	1	**384-4717**	1	VALVE GP-CHECK (BOOM LOWERING CONTROL, LH)	
	27	1	**384-4718**	1	VALVE GP-CHECK (BOOM LOWERING CONTROL, RH)	
					(EACH VALVE GP- CHECK INCLUDES)	
		1	**4J-5267**	1	SEAL-O-RING	
	28	1	**139-5751**	2	CLAMP-SINGLE	
	29	1	**140-7599**	1	CLAMP	
	30	1	*148-8327*	1	CONNECTOR AS	
		1	**3D-2824**	1	SEAL-O-RING	
		1	**6V-8637**	1	CONNECTOR	
		1	**6V-9746**	1	SEAL-O-RING	
	31	1	*148-8336*	3	CONNECTOR AS	
					(EACH INCLUDES)	
		1	**3J-1907**	1	SEAL-O-RING	

340-3073 **LINES GP-LOAD CONTROL VALVE (**contd.**)** **i05934671**

NOTE	REF NO	GRAPHIC REF	PART NUMBER	QTY	PART NAME 1 2 3 4 5 6 (PRODUCT LEVEL)	SEE PAGE
		1	**6V-8397**	1	SEAL-O-RING	
		1	**6V-8636**	1	CONNECTOR	
	32	1	*148-8341*	1	CONNECTOR AS	
		1	**3D-2824**	1	SEAL-O-RING	
		1	**6V-8713**	1	CONNECTOR	
		1	**7J-9108**	1	SEAL-O-RING	
	33	1	*148-8347*	1	ELBOW AS	
		1	**3D-2824**	1	SEAL-O-RING	
		1	**6V-9007**	1	ELBOW	
		1	**6V-9746**	1	SEAL-O-RING	
	34	1	*148-8367*	3	ELBOW AS	
					(EACH INCLUDES)	
		1	**6V-8397**	1	SEAL-O-RING	
		1	**6V-9850**	1	ELBOW	
	35	1	*148-8433*	2	TEE AS	
					(EACH INCLUDES)	
		1	**6V-8397**	2	SEAL-O-RING	
		1	**6V-9836**	1	TEE-SWIVEL	
	36	1	*148-8435*	1	TEE AS	
		1	**3J-1907**	1	SEAL-O-RING	
		1	**6V-8397**	2	SEAL-O-RING	
		1	**6V-8781**	1	TEE	
	37	1	*153-6237*	1	ELBOW AS	
		1	**3D-2824**	1	SEAL-O-RING	
		1	**6V-9004**	1	ELBOW	
		1	**6V-9746**	1	SEAL-O-RING	
	38	1	*156-4282*	1	REDUCER AS	
		1	**6V-8397**	1	SEAL-O-RING	
		1	**6V-8938**	1	REDUCER	
	39	1	**1P-3702**	3	SEAL-RECTANGULAR	
	40	1	**1P-3703**	2	SEAL-RECTANGULAR	
	41	1	**204-2281**	1	STRAP-CABLE	
	42	1	**230-7732**	1	MOUNTING-CABLE TIE	
	43	1	*304-8036*	1	CONNECTOR AS	
		1	**8T-8887**	1	CONNECTOR	
		1	**214-7568**	1	SEAL-O-RING	
		1	**228-7089**	1	SEAL-O-RING	
	44	1	**3J-1907**	1	SEAL-O-RING	
	45	1	**3S-2093**	1	STRAP-CABLE	
	46	1	**3V-2431**	8	WASHER (10.2X16X2-MM THK)	
	47	1	**4J-5267**	1	SEAL-O-RING	
	48	1	**5K-9090**	2	SEAL-O-RING	
	49	1	**6V-0400**	4	FLANGE-HALF	
	50	1	**7K-1181**	4	STRAP-CABLE	
M	51	1	**8C-8451**	2	BOLT (M6X1X40-MM)	
	52	1	**8T-4121**	13	WASHER-HARD (11X21X2.5-MM THK)	
M	53	1	**8T-4171**	1	BOLT (M6X1X12-MM)	
M	54	1	**8T-4172**	3	BOLT (M10X1.5X80-MM)	
M	55	1	**8T-4182**	12	BOLT (M10X1.5X45-MM)	
M	56	1	**8T-4184**	4	BOLT (M12X1.75X45-MM)	
	57	1	**8T-4223**	8	WASHER-HARD (13.5X25.5X3-MM THK)	
M	58	1	**8T-5005**	1	BOLT (M10X1.5X70-MM)	

340-3073 **LINES GP-LOAD CONTROL VALVE (**contd.**)** **i05934671**

NOTE	REF NO	GRAPHIC REF	PART NUMBER	QTY	PART NAME 1 2 3 4 5 6 (PRODUCT LEVEL)	SEE PAGE
	59	1	**8T-9403**	6	FLANGE-HALF	
	60	1	**9X-6581**	1	NUT-O-RING SEAL (1-14-THD)	

I - REFER TO HYDRAULIC INFORMATION SYSTEM
M - METRIC PART

340-3073 **LINES GP-LOAD CONTROL VALVE (**contd.**)** **i05934671**

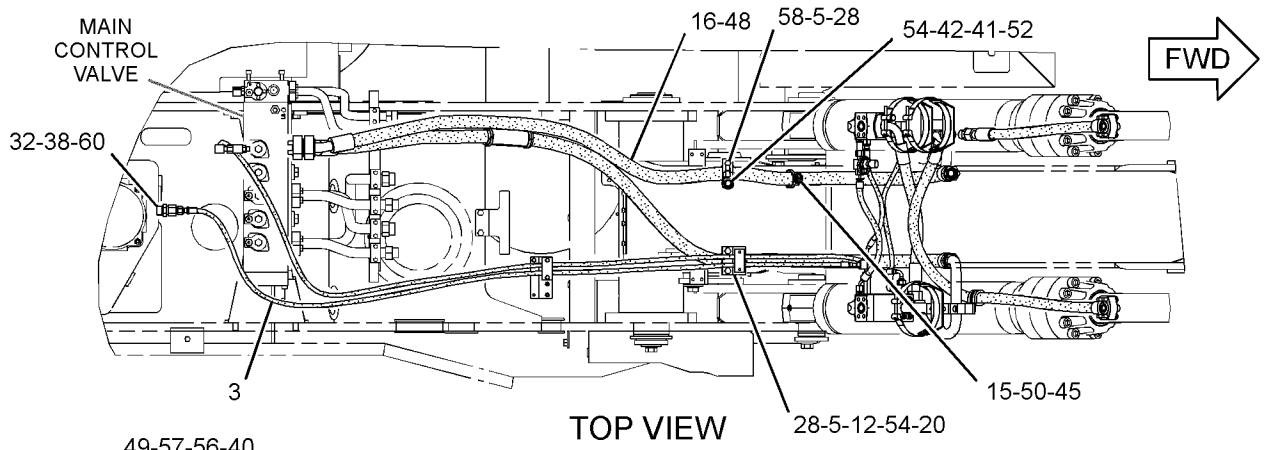

TOP VIEW

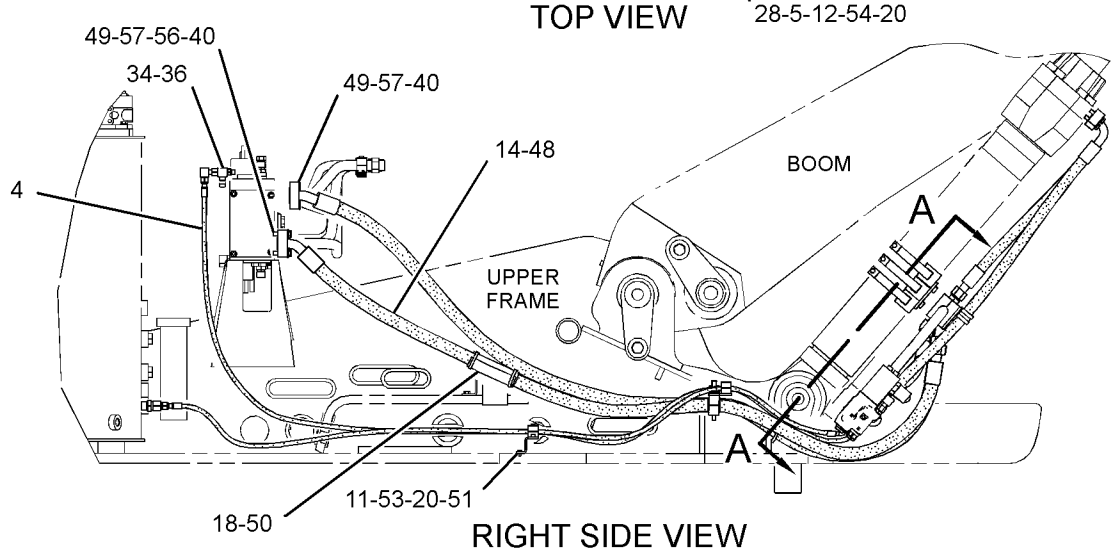

RIGHT SIDE VIEW

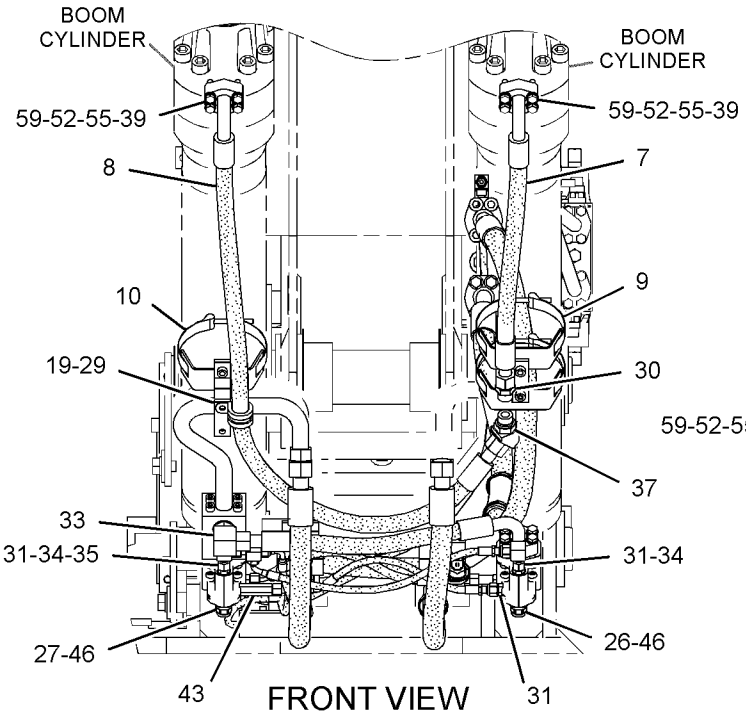

FRONT VIEW

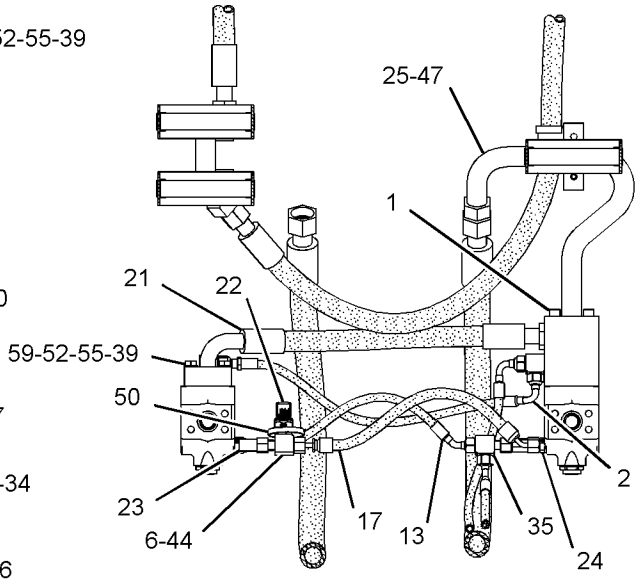

VIEW A-A

GRAPHIC #1 <END> g03061236

380-4720 LINES GP-LOAD CONTROL VALVE—BOOM CYLINDER

S/N: CH91-UP
PART OF 425-9134 VALVE & LINES AR
AN ATTACHMENT

SMCS-5057, 5811 **i05934573**

NOTE	REF NO	GRAPHIC REF	PART NUMBER	QTY	PART NAME 1 2 3 4 5 6 (PRODUCT LEVEL)	SEE PAGE
	1	1	**137-9373**	1	HOSE AS	
	2	1	**139-4016**	2	INSERT-RUBBER	
	3	1	**142-7425**	1	TUBE AS	
	4	1	**144-6060**	1	ORIFICE	
I	5	1	**185-6807**	1	HOSE AS	
I	6	1	**185-6808**	1	HOSE AS	
I	7	1	**185-6809**	1	HOSE AS	
	8	1	**185-6810**	1	CLAMP AS	
	9	1	**187-5078**	1	CLAMP AS	
I	10	1	**190-8537**	1	HOSE AS	
I	11	1	**190-8539**	1	HOSE AS	
	12	1	*194-9390*	2	CLAMP GP-HYDRAULIC LINES	
					(EACH INCLUDES)	
		1	**194-9388**	2	CLAMP	
		1	**194-9389**	1	PLATE	
Y	13	1	**195-1907**	2	VALVE GP-FLOW CONTROL	671
	14	1	**200-6181**	1	PLATE AS	
	15	1	**201-7153**	1	PLATE AS	
I	16	1	**203-1913**	1	HOSE AS	
I	17	1	**203-1920**	1	HOSE AS	
	18	1	**206-2423**	1	SADDLE-MOUNTING	
I	19	1	**212-6763**	1	HOSE AS	
	20	1	**266-0982**	1	GUARD	
	21	1	**288-3658**	1	CLAMP-SINGLE	
	22	1	**314-2885**	1	CONNECTOR-SPECIAL	
	23	1	**330-4681**	1	TUBE AS	
	24	1	**349-1178**	1	SENSOR-PRESSURE (OVERLOAD WARNING)	
M	25	1	**101-7398**	8	BOLT-SOCKET HEAD (M10X1.5X40-MM)	
M	26	1	**101-7404**	4	BOLT-SOCKET HEAD (M10X1.5X30-MM)	
M	27	1	**105-3477**	8	BOLT-SOCKET HEAD (M10X1.5X45-MM)	
	28	1	**139-5751**	2	CLAMP-SINGLE	
	29	1	**140-7599**	1	CLAMP	
	30	1	*148-8315*	2	CONNECTOR AS	
					(EACH INCLUDES)	
		1	**2M-9780**	1	SEAL-O-RING	
		1	**6V-8642**	1	CONNECTOR	
		1	**7J-9108**	1	SEAL-O-RING	
	31	1	*148-8327*	1	CONNECTOR AS	
		1	**3D-2824**	1	SEAL-O-RING	
		1	**6V-8637**	1	CONNECTOR	
		1	**6V-9746**	1	SEAL-O-RING	
	32	1	*148-8336*	3	CONNECTOR AS	
					(EACH INCLUDES)	
		1	**3J-1907**	1	SEAL-O-RING	
		1	**6V-8397**	1	SEAL-O-RING	
		1	**6V-8636**	1	CONNECTOR	
	33	1	*148-8338*	1	CONNECTOR AS	

380-4720 **LINES GP-LOAD CONTROL VALVE (**contd.**)** **i05934573**

NOTE	REF NO	GRAPHIC REF	PART NUMBER	QTY	PART NAME 1 2 3 4 5 6 (PRODUCT LEVEL)	SEE PAGE
		1	**3J-1907**	1	SEAL-O-RING	
		1	**6V-8397**	1	SEAL-O-RING	
		1	**8T-0075**	1	CONNECTOR	
	34	1	*148-8341*	1	CONNECTOR AS	
		1	**3D-2824**	1	SEAL-O-RING	
		1	**6V-8713**	1	CONNECTOR	
		1	**7J-9108**	1	SEAL-O-RING	
	35	1	*148-8433*	1	TEE AS	
		1	**6V-8397**	2	SEAL-O-RING	
		1	**6V-9836**	1	TEE-SWIVEL	
	36	1	*148-8446*	1	TEE AS-SWIVEL	
		1	**6V-9838**	1	TEE-SWIVEL	
		1	**7J-9108**	2	SEAL-O-RING	
	37	1	*153-6237*	1	ELBOW AS	
		1	**3D-2824**	1	SEAL-O-RING	
		1	**6V-9004**	1	ELBOW	
		1	**6V-9746**	1	SEAL-O-RING	
	38	1	**1P-3702**	4	SEAL-RECTANGULAR	
	39	1	**1P-3703**	2	SEAL-RECTANGULAR	
	40	1	**204-2281**	1	STRAP-CABLE	
	41	1	**230-7732**	1	MOUNTING-CABLE TIE	
Y	42	1	**254-2675**	2	VALVE GP-LOAD CONTROL	674
M	43	1	**280-8912**	2	BOLT (M10X1.5X75-MM)	
	44	1	**3J-1907**	2	SEAL-O-RING	
	45	1	**3S-2093**	1	STRAP-CABLE	
	46	1	**4J-5267**	3	SEAL-O-RING	
	47	1	**5K-9090**	2	SEAL-O-RING	
	48	1	**6V-0400**	4	FLANGE-HALF	
	49	1	**7K-1181**	5	STRAP-CABLE	
M	50	1	**8C-8451**	4	BOLT (M6X1X40-MM)	
	51	1	**8T-4121**	17	WASHER-HARD (11X21X2.5-MM THK)	
M	52	1	**8T-4171**	1	BOLT (M6X1X12-MM)	
M	53	1	**8T-4172**	3	BOLT (M10X1.5X80-MM)	
M	54	1	**8T-4182**	8	BOLT (M10X1.5X45-MM)	
M	55	1	**8T-4184**	4	BOLT (M12X1.75X45-MM)	
M	56	1	**8T-4185**	2	BOLT (M10X1.5X50-MM)	
	57	1	**8T-4223**	8	WASHER-HARD (13.5X25.5X3-MM THK)	
M	58	1	**8T-5005**	1	BOLT (M10X1.5X70-MM)	
M	59	1	**8T-6868**	4	BOLT (M12X1.75X80-MM)	
	60	1	**8T-9403**	8	FLANGE-HALF	

I - REFER TO HYDRAULIC INFORMATION SYSTEM
M - METRIC PART
Y - SEPARATE ILLUSTRATION

380-4720 **LINES GP-LOAD CONTROL VALVE (**contd.**)** **i05934573**

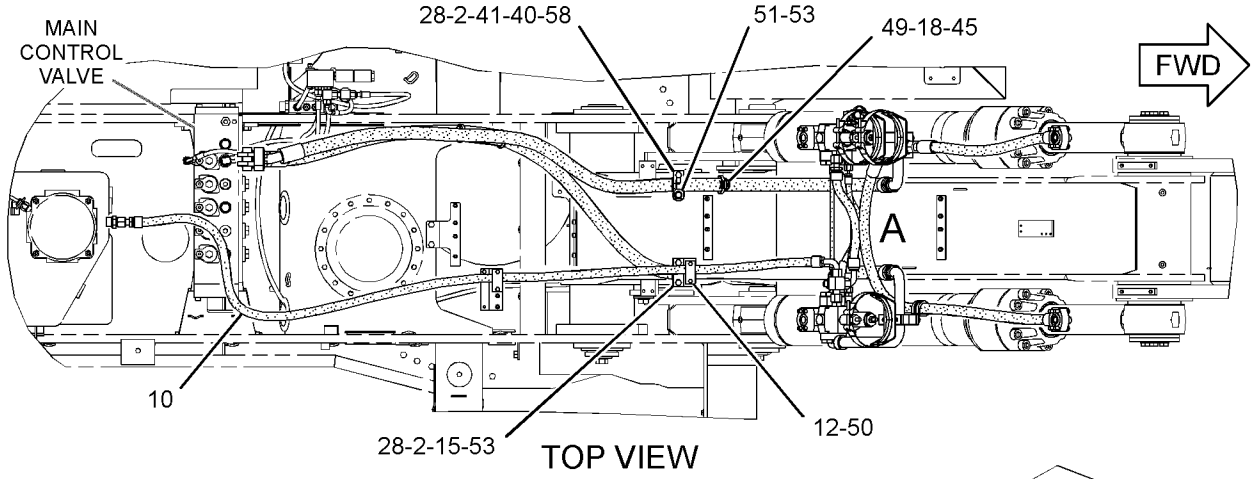

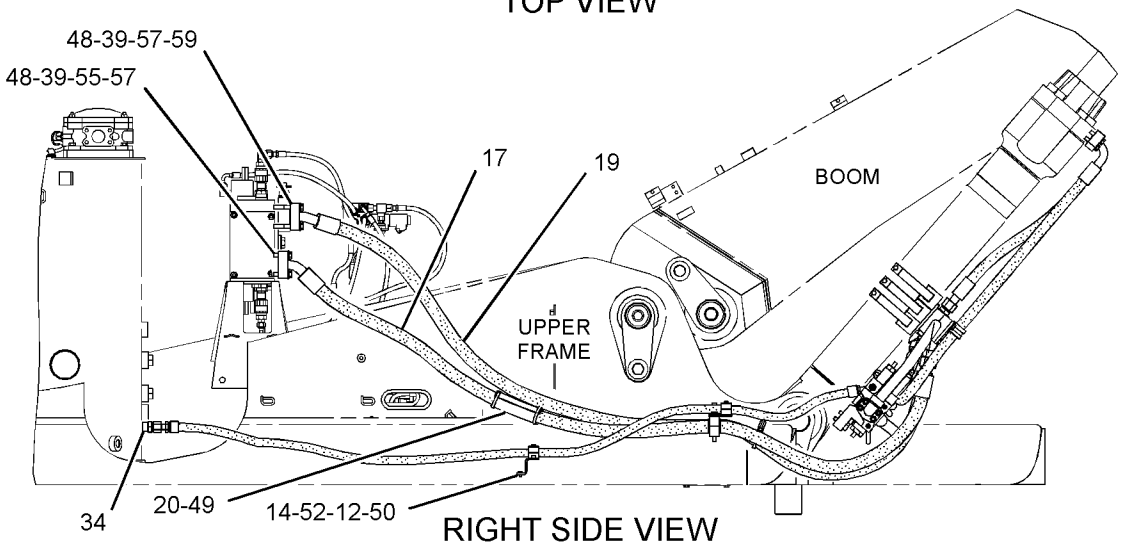

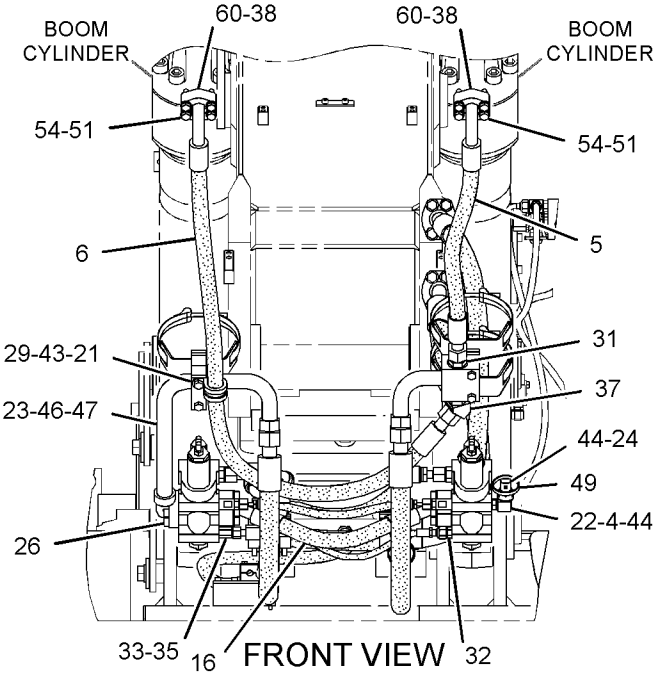

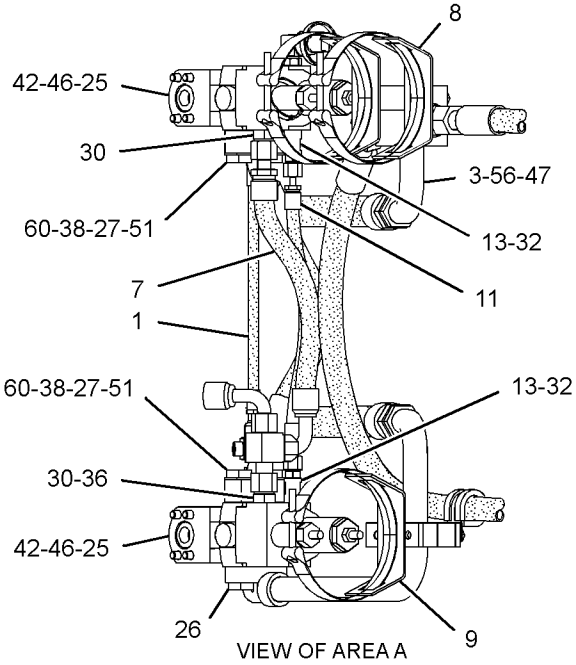

GRAPHIC #1 <END> g03040696

254-0470 LINES GP-PILOT—PLATFORM TRAVEL

S/N: CH91-UP
PART OF 449-2784 HYDRAULIC AR
ALSO AN ATTACHMENT

SMCS-5057, 5059 **i05934394**

NOTE	REF NO	GRAPHIC REF	PART NUMBER	QTY	PART NAME 1 2 3 4 5 6 (PRODUCT LEVEL)	SEE PAGE
	1	1	**254-2649**	2	BLOCK-MANIFOLD	
I	2	1	**130-8153**	1	HOSE AS	
	3	1	*148-8336*	3	CONNECTOR AS	
					(EACH INCLUDES)	
		1	**3J-1907**	1	SEAL-O-RING	
		1	**6V-8397**	1	SEAL-O-RING	
		1	**6V-8636**	1	CONNECTOR	
	4	1	*148-8340*	1	CONNECTOR AS	
		1	**3K-0360**	1	SEAL-O-RING	
		1	**6V-8398**	1	SEAL-O-RING	
		1	**6V-8639**	1	CONNECTOR	
	5	1	*148-8378*	2	ELBOW AS	
					(EACH INCLUDES)	
		1	**3J-1907**	1	SEAL-O-RING	
		1	**6V-8397**	1	SEAL-O-RING	
		1	**6V-8724**	1	ELBOW	
	6	1	*148-8395*	1	PLUG AS	
		1	**3K-0360**	1	SEAL-O-RING	
		1	**9S-8005**	1	PLUG (3/4-16-THD)	
I	7	1	**155-6985**	1	HOSE AS	
	8	1	*162-0177*	5	PLUG AS	
					(EACH INCLUDES)	
		1	**3J-1907**	1	SEAL-O-RING	
		1	**9S-8004**	1	PLUG (9/16-18-THD)	
I	9	1	**168-9204**	1	HOSE AS	
	10	1	**201-8752**	1	HOSE AS	
	11	1	**201-8755**	1	HOSE AS	
	12	1	**4I-9523**	2	BAND-MARKER (BLUE, L3)	
	13	1	**4I-9524**	1	BAND-MARKER (BROWN, L4)	
	14	1	**4I-9525**	1	BAND-MARKER (ORANGE, R1)	
	15	1	**4I-9527**	1	BAND-MARKER (GREEN, R3)	
	16	1	**4I-9528**	3	BAND-MARKER (PURPLE, R4)	
M	17	1	**8T-3647**	2	BOLT (M8X1.25X80-MM)	

I - REFER TO HYDRAULIC INFORMATION SYSTEM
M - METRIC PART

254-0470 **LINES GP-PILOT (**contd.**)** **i05934394**

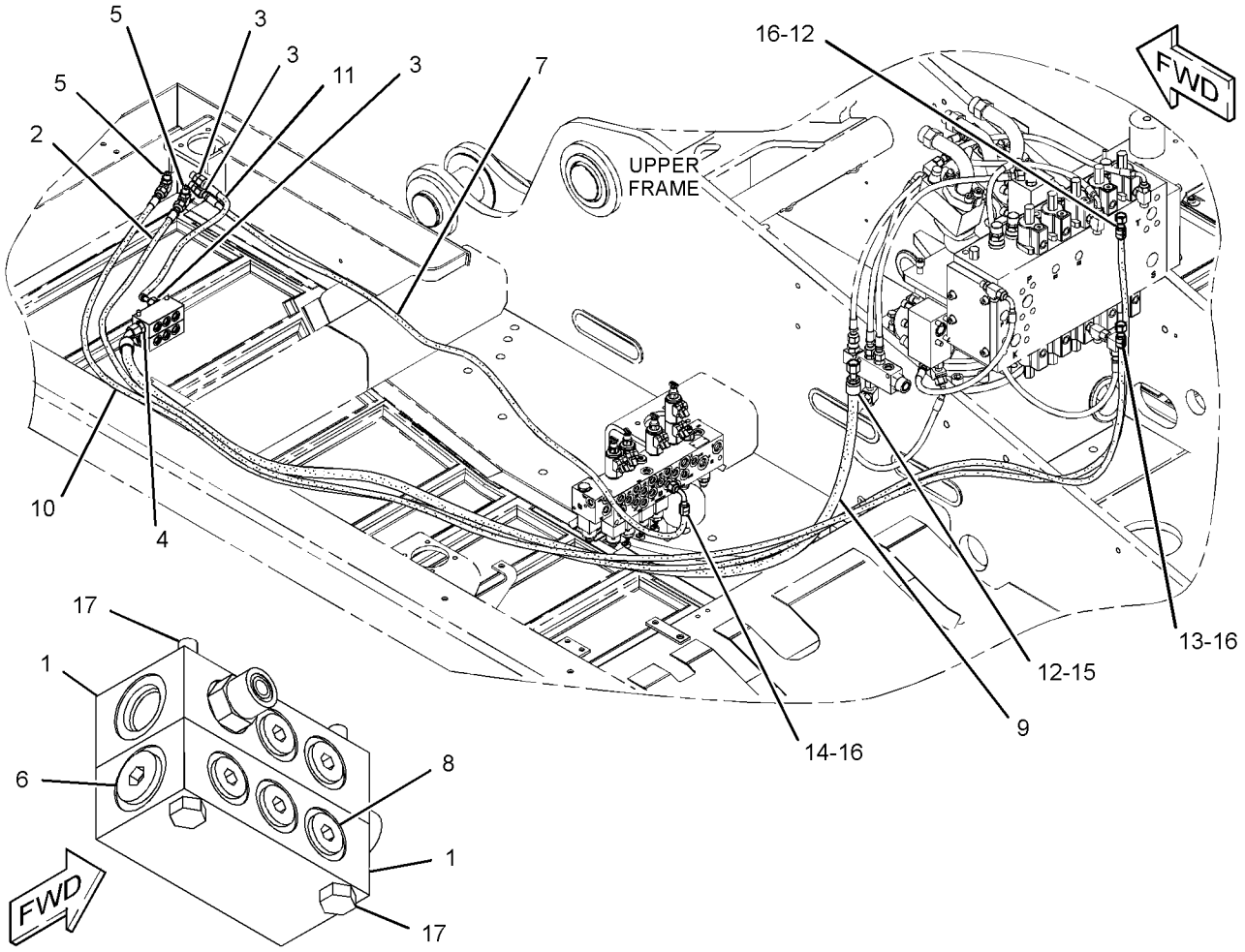

GRAPHIC #1 <END> g01321471

254-0477 LINES GP-PILOT—OPERATOR

S/N: CH91-UP
PART OF 449-2784 HYDRAULIC AR
ALSO AN ATTACHMENT

SMCS-5057, 5059 **i05934395**

NOTE	REF NO	GRAPHIC REF	PART NUMBER	QTY	PART NAME 1 2 3 4 5 6 (PRODUCT LEVEL)	SEE PAGE
	1	1	**138-9357**	1	HOSE AS	
M	2	1	**262-7741**	4	BOLT-SOCKET HEAD (M6X1X55-MM)	
	3	1	*276-5278*	2	CLAMP AS	
					(EACH INCLUDES)	
		1	**276-5280**	2	BLOCK-CLAMP	
		1	**276-5281**	1	BLOCK-CLAMP	
	4	1	**276-5282**	4	ADAPTER	
I	5	1	**113-0489**	1	HOSE AS	
	6	1	**130-1151**	1	HOSE AS	
	7	1	**130-1152**	1	HOSE AS	
I	8	1	**136-1862**	1	HOSE AS	
	9	1	**138-9358**	1	HOSE AS	
	10	1	**138-9359**	1	HOSE AS	
	11	1	*148-8336*	20	CONNECTOR AS	
					(EACH INCLUDES)	
		1	**3J-1907**	1	SEAL-O-RING	
		1	**6V-8397**	1	SEAL-O-RING	
		1	**6V-8636**	1	CONNECTOR	
	12	1	*148-8367*	2	ELBOW AS	
					(EACH INCLUDES)	
		1	**6V-8397**	1	SEAL-O-RING	
		1	**6V-9850**	1	ELBOW	
	13	1	*148-8378*	2	ELBOW AS	
					(EACH INCLUDES)	
		1	**3J-1907**	1	SEAL-O-RING	
		1	**6V-8397**	1	SEAL-O-RING	
		1	**6V-8724**	1	ELBOW	
	14	1	**201-8759**	1	HOSE AS	
M	15	1	**283-5684**	3	BOLT-SOCKET HEAD (M6X1X35-MM)	
	16	1	**4I-9521**	3	BAND-MARKER (RED, L1)	
	17	1	**4I-9522**	3	BAND-MARKER (YELLOW, L2)	
	18	1	**4I-9523**	1	BAND-MARKER (BLUE, L3)	
	19	1	**4I-9524**	1	BAND-MARKER (BROWN, L4)	
	20	1	**4I-9525**	1	BAND-MARKER (ORANGE, R1)	
	21	1	**4I-9526**	1	BAND-MARKER (WHITE, R2)	
	22	1	**4I-9527**	1	BAND-MARKER (GREEN, R3)	
	23	1	**4I-9528**	1	BAND-MARKER (PURPLE, R4)	
M	24	1	**5C-2890**	4	NUT (M6X1-THD)	
I	25	1	**130-8154**	2	HOSE AS	
	26	1	**240-6953**	2	HOSE AS	
I	27	1	**113-0436**	2	HOSE AS	
I	28	1	**133-2154**	2	HOSE AS	
B	29	1	**7K-1181**	6	STRAP-CABLE	

B - USE AS REQUIRED
I - REFER TO HYDRAULIC INFORMATION SYSTEM
M - METRIC PART

254-0477 **LINES GP-PILOT (**contd.**)** **i05934395**

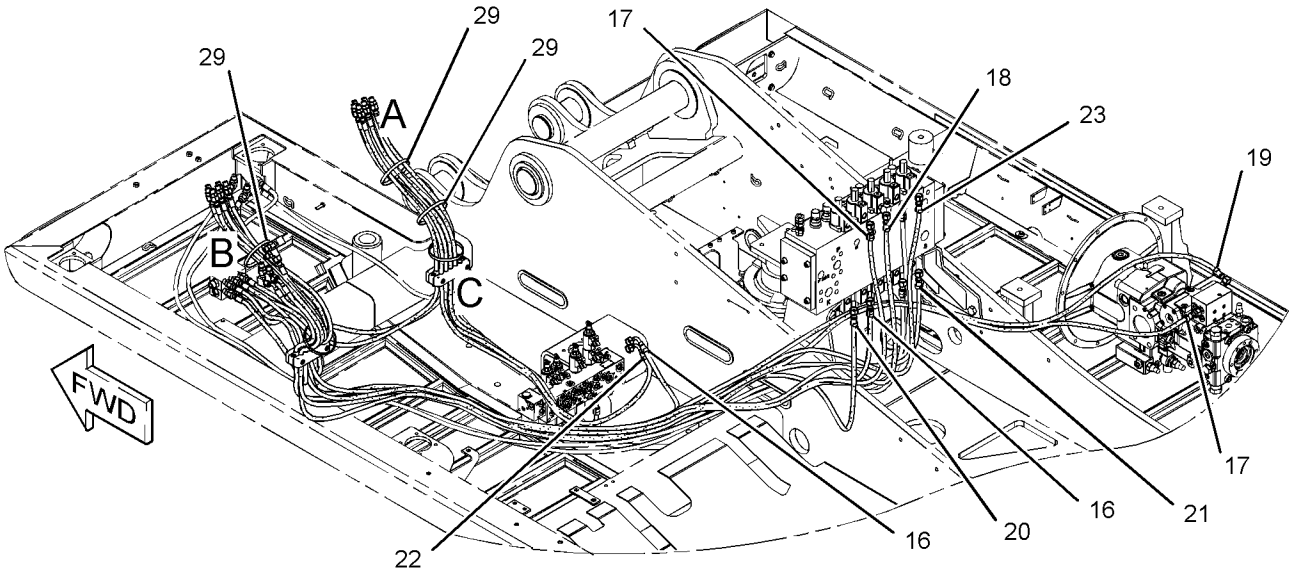

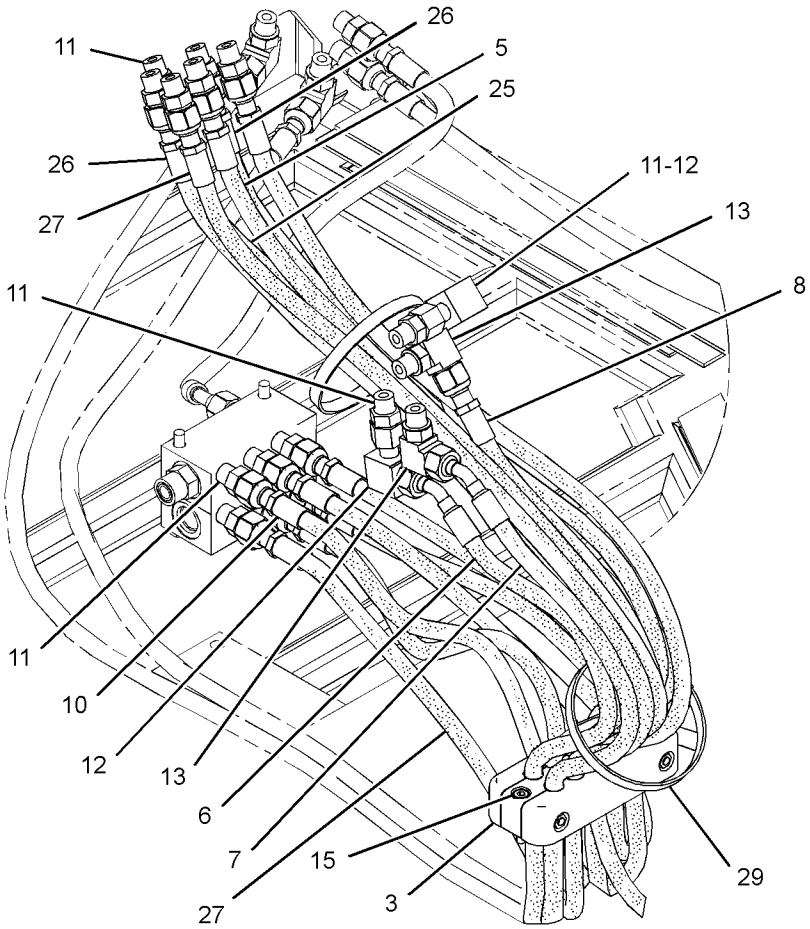

VIEW OF AREA B

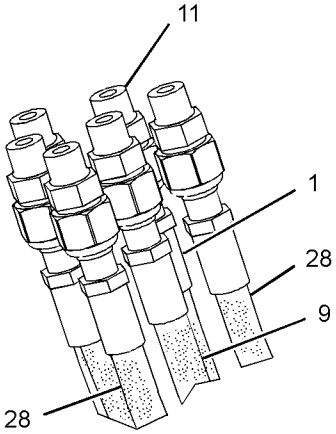

VIEW OF AREA A

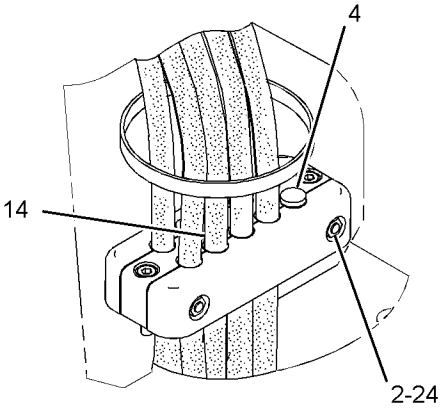

VIEW OF AREA C

GRAPHIC #1 <END> g01328302

254-2663 LINES GP-PILOT—PLATFORM, BRAKE

S/N: CH91-UP
PART OF 449-2784 HYDRAULIC AR
ALSO AN ATTACHMENT

SMCS-5057, 5059 **i05934396**

NOTE	REF NO	GRAPHIC REF	PART NUMBER	QTY	PART NAME 1 2 3 4 5 6 (PRODUCT LEVEL)	SEE PAGE
	1	1	**4I-9521**	1	BAND-MARKER (RED, L1)	
	2	1	**4I-9522**	1	BAND-MARKER (YELLOW, L2)	
	3	1	**4I-9523**	1	BAND-MARKER (BLUE, L3)	
	5	1	**6V-0852**	3	CAP-DUST	
	6	1	**119-0744**	1	HOSE AS	
	7	1	*148-8420*	2	TEE AS	
					(EACH INCLUDES)	
		1	**3K-0360**	1	SEAL-O-RING	
		1	**6V-8398**	1	SEAL-O-RING	
		1	**8T-6338**	1	TEE-O-RING PORT	
	8	1	*148-8424*	1	TEE AS	
		1	**6V-8397**	1	SEAL-O-RING	
		1	**8T-8902**	1	ADAPTER-TEE	
I	9	1	**155-6985**	1	HOSE AS	
Y	10	1	*235-5646*	2	ACCUMULATOR GP-BRAKE (CHARGED)	325
M	11	1	**118-8599**	2	NUT-HEX (M33X1.5-THD)	
	12	1	**133-5813**	3	BAND-MARKER (GRAY, P)	
	13	1	*148-8318*	3	CONNECTOR AS	
					(EACH INCLUDES)	
		1	**3K-0360**	1	SEAL-O-RING	
		1	**6V-8397**	1	SEAL-O-RING	
		1	**6V-8634**	1	CONNECTOR	
	14	1	*148-8345*	4	CONNECTOR AS	
					(EACH INCLUDES)	
		1	**2M-9780**	1	SEAL-O-RING	
		1	**6V-8398**	1	SEAL-O-RING	
		1	**6V-8638**	1	CONNECTOR	
	15	1	*148-8364*	1	ELBOW AS	
		1	**3K-0360**	1	SEAL-O-RING	
		1	**6V-8398**	1	SEAL-O-RING	
		1	**6V-8625**	1	ELBOW	
	16	1	*148-8367*	1	ELBOW AS	
		1	**6V-8397**	1	SEAL-O-RING	
		1	**6V-9850**	1	ELBOW	
	17	1	*148-8370*	2	ELBOW AS	
					(EACH INCLUDES)	
		1	**6V-8398**	1	SEAL-O-RING	
		1	**6V-9851**	1	ELBOW	
	18	1	*148-8374*	1	ELBOW AS	
		1	**3K-0360**	1	SEAL-O-RING	
		1	**6V-8397**	1	SEAL-O-RING	
		1	**6V-8723**	1	ELBOW	
	19	1	*148-8378*	1	ELBOW AS	
		1	**3J-1907**	1	SEAL-O-RING	
		1	**6V-8397**	1	SEAL-O-RING	
		1	**6V-8724**	1	ELBOW	
	20	1	*148-8415*	1	REDUCER AS	

254-2663 **LINES GP-PILOT (**contd.**)** **i05934396**

NOTE	REF NO	GRAPHIC REF	PART NUMBER	QTY	PART NAME 1 2 3 4 5 6 (PRODUCT LEVEL)	SEE PAGE
		1	**6V-8397**	1	SEAL-O-RING	
		1	**6V-8936**	1	REDUCER	
	22	1	*164-5608*	1	CONNECTOR AS	
		1	**3K-0360**	1	SEAL-O-RING	
		1	**6V-8398**	1	SEAL-O-RING	
		1	**8T-1687**	1	CONNECTOR	
I	23	1	**196-8426**	1	HOSE AS	
I	24	1	**203-1921**	1	HOSE AS	
	26	1	**3J-1907**	3	SEAL-O-RING	
	27	1	**4I-9528**	2	BAND-MARKER (PURPLE, R4)	
	28	1	**6V-4433**	3	FITTING	
B	29	1	**7K-1181**	3	STRAP-CABLE	
I	31	1	**177-1997**	2	HOSE AS	
I	32	1	**195-0799**	2	HOSE AS	
	33	1	*150-4037*	1	TEE AS	
		1	**6V-8398**	2	SEAL-O-RING	
		1	**6V-9844**	1	TEE-SWIVEL	
	34	1	*153-6241*	1	ELBOW AS	
		1	**6V-8398**	1	SEAL-O-RING	
		1	**8C-8989**	1	ELBOW	

B - USE AS REQUIRED
I - REFER TO HYDRAULIC INFORMATION SYSTEM
M - METRIC PART
Y - SEPARATE ILLUSTRATION

254-2663 **LINES GP-PILOT (**contd.**)** **i05934396**

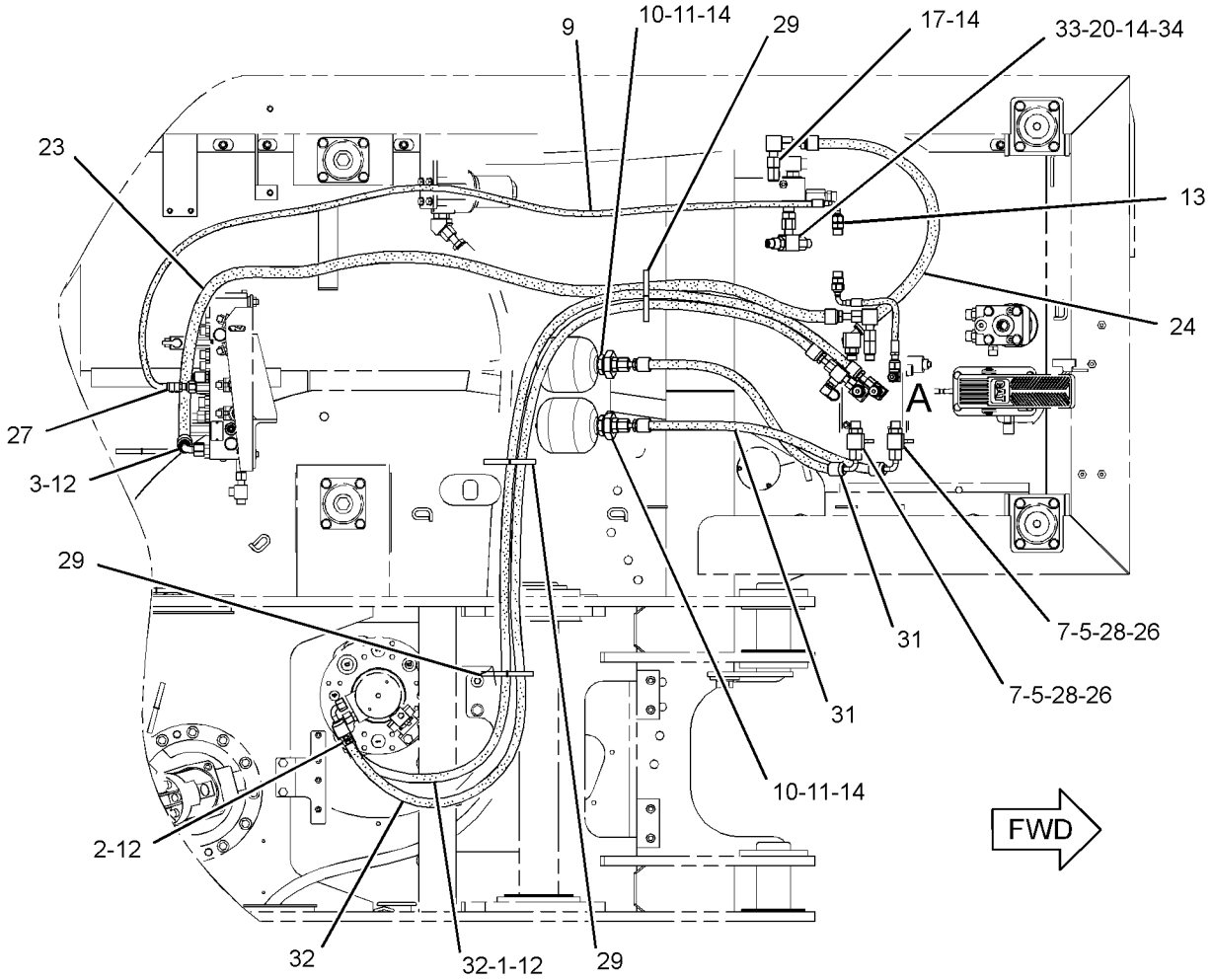

TOP VIEW

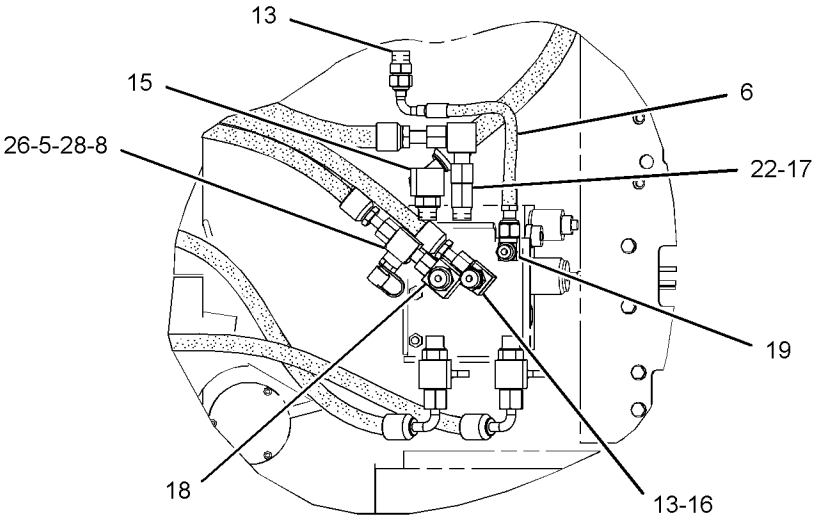

VIEW OF AREA A

GRAPHIC #1 <END> g02887158

274-5423 LINES GP-PILOT–VA BOOM CYLINDER

S/N: CH91-UP

PART OF 446-2738, 446-2745, 453-3004 VALVE & LINES AR AN ATTACHMENT

SMCS-5057, 5059

i05519549

NOTE	REF NO	GRAPHIC REF	PART NUMBER	QTY	PART NAME 1 2 3 4 5 6 (PRODUCT LEVEL)	SEE PAGE
Y	1	1	**112-5704**	1	CONTROL GP-HYDRAULIC PEDAL (VA BOOM)	826
I	2	1	**139-1942**	1	HOSE AS	
I	3	1	**140-1250**	1	HOSE AS	
	4	1	**196-9060**	1	PLATE	
	5	1	*148-8336*	6	CONNECTOR AS	
					(EACH INCLUDES)	
		1	**3J-1907**	1	SEAL-O-RING	
		1	**6V-8397**	1	SEAL-O-RING	
		1	**6V-8636**	1	CONNECTOR	
	6	1	**4I-9522**	2	BAND-MARKER (YELLOW, L2)	
	7	1	**4I-9524**	1	BAND-MARKER (BROWN, L4)	
	8	1	**4I-9525**	1	BAND-MARKER (ORANGE, R1)	
M	9	1	**8T-4189**	4	BOLT (M8X1.25X20-MM)	
	10	1	**8T-4224**	4	WASHER-HARD (8.8X16X2-MM THK)	
	11	1	**138-9355**	2	HOSE AS	

I - REFER TO HYDRAULIC INFORMATION SYSTEM
M - METRIC PART
Y - SEPARATE ILLUSTRATION

274-5423 **LINES GP-PILOT (**contd.**)** **i05519549**

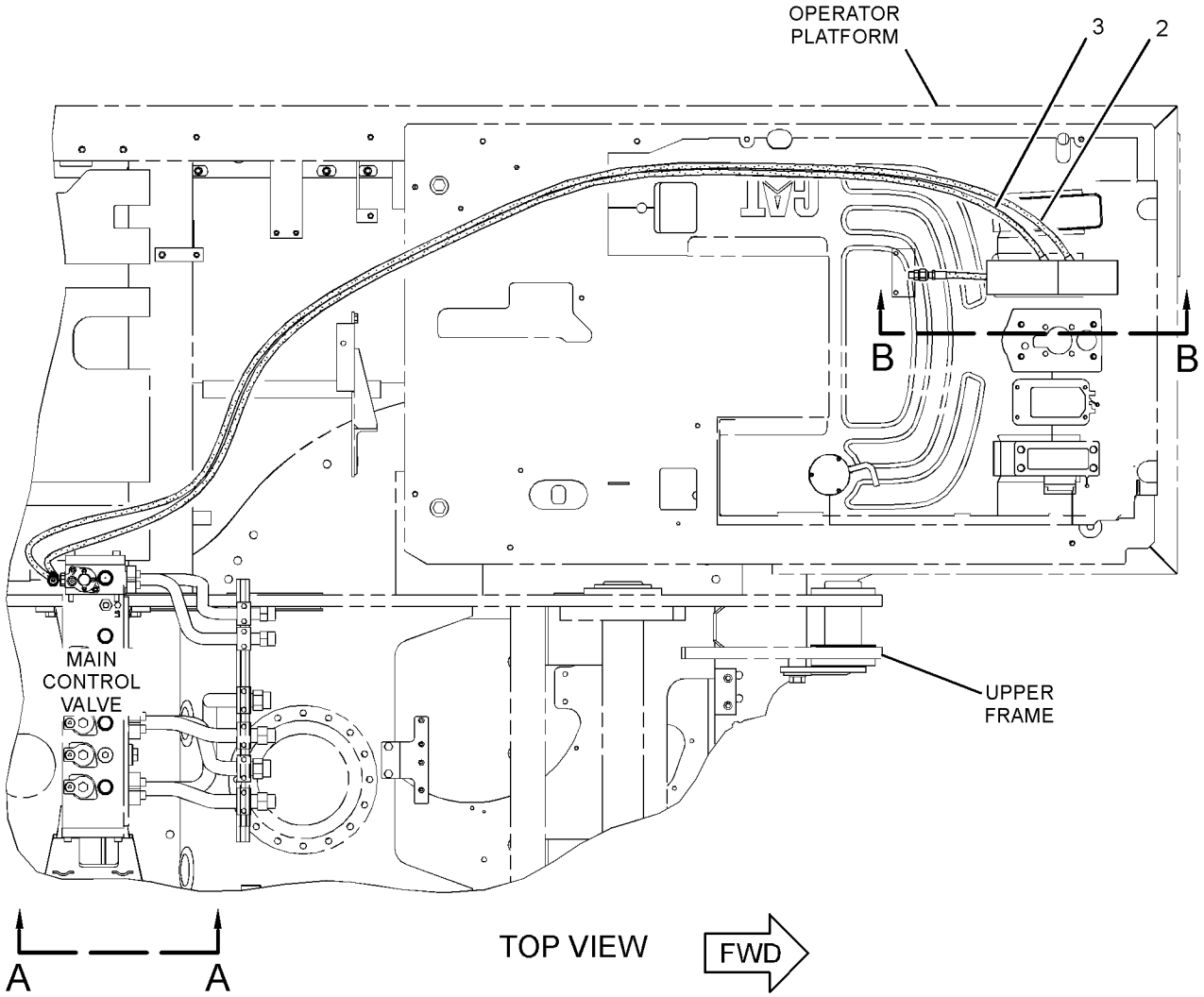

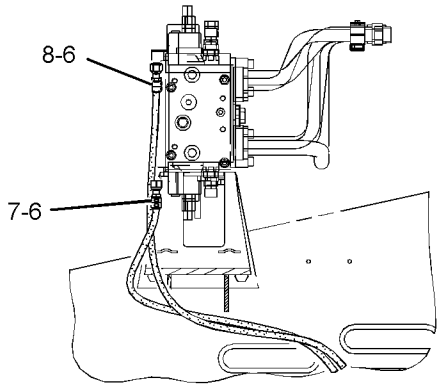

VIEW A-A

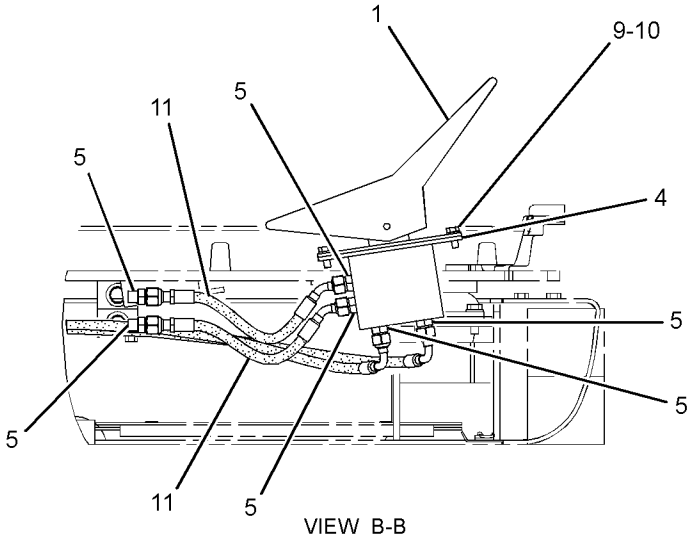

VIEW B-B

GRAPHIC #1 <END> g01329501

299-9227 LINES GP-PILOT—RETURN OIL

S/N: CH91-UP

CANNOT BE USED WITH MACHINE EQUIPPED WITH MEDIUM PRESSURE FUNCTION, MACHINE EQUIPPED WITH STEER BY JOYSTICK FUNCTION, MACHINE EQUIPPED WITH OFFSET FUNCTION, MACHINE EQUIPPED WITH HYDRAULIC CAB RISER

PART OF 417-9967, 445-2355 HYDRAULIC AR

AN ATTACHMENT

SMCS-5057, 5059 **i05519590**

NOTE	REF NO	GRAPHIC REF	PART NUMBER	QTY	PART NAME 1 2 3 4 5 6 (PRODUCT LEVEL)	SEE PAGE
	1	1	*148-8372*	1	ELBOW AS	
		1	**2M-9780**	1	SEAL-O-RING	
		1	**6V-8398**	1	SEAL-O-RING	
		1	**6V-8721**	1	ELBOW	
I	2	1	**170-0271**	1	HOSE AS	

I - REFER TO HYDRAULIC INFORMATION SYSTEM

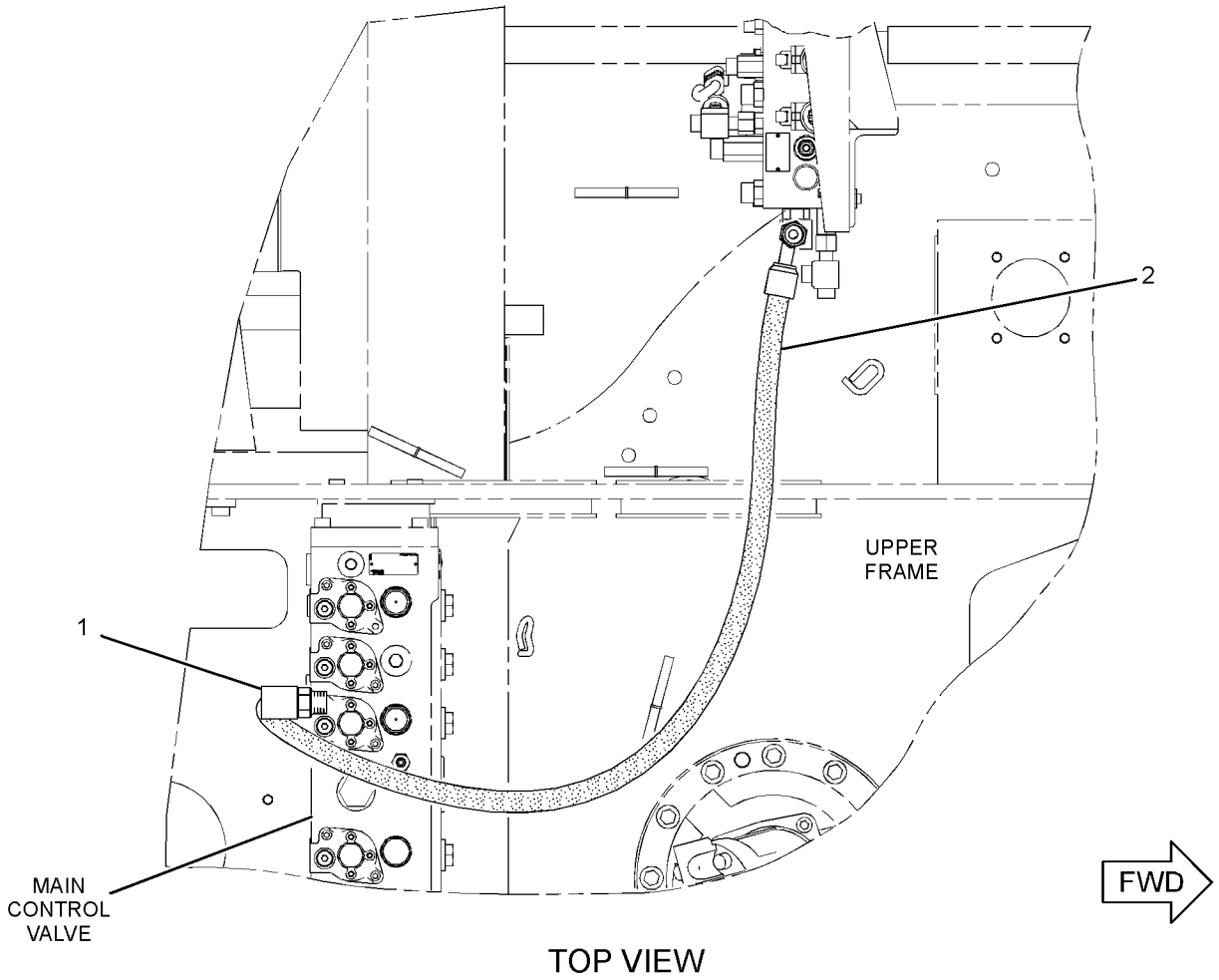

TOP VIEW

GRAPHIC #1 <END> g01372351

461-6000 LINES GP-PILOT—UPPER

S/N: CH91-UP
PART OF 449-2784 HYDRAULIC AR
ALSO AN ATTACHMENT

SMCS-5057, 5059 **i05949614**

NOTE	REF NO	GRAPHIC REF	PART NUMBER	QTY	PART NAME 1 2 3 4 5 6 (PRODUCT LEVEL)	SEE PAGE
	1	1	**4I-9521**	2	BAND-MARKER (RED, L1)	
	2	1	**4I-9522**	2	BAND-MARKER (YELLOW, L2)	
	3	1	**4I-9523**	2	BAND-MARKER (BLUE, L3)	
	4	1	**4I-9524**	1	BAND-MARKER (BROWN, L4)	
	5	1	**4I-9525**	1	BAND-MARKER (ORANGE, R1)	
	6	1	**4I-9527**	9	BAND-MARKER (GREEN, R3)	
	7	1	**4I-9528**	4	BAND-MARKER (PURPLE, R4)	
I	8	1	**113-0434**	1	HOSE AS	
I	9	1	**113-0435**	2	HOSE AS	
I	10	1	**113-0442**	1	HOSE AS	
I	11	1	**113-0490**	1	HOSE AS	
I	12	1	**122-1233**	1	HOSE AS	
	13	1	**133-5813**	1	BAND-MARKER (GRAY, P)	
	14	1	**201-8756**	1	HOSE AS	
I	15	1	**201-8758**	1	HOSE AS	
I	16	1	**260-8738**	1	HOSE AS	
I	17	1	**266-9582**	1	HOSE AS	
I	18	1	**266-9583**	1	HOSE AS	
Y	19	1	*461-5997*	1	VALVE GP-PILOT	686
M	20	1	**108-4282**	2	BOLT-SOCKET HEAD (M10X1.5X100-MM)	
	21	1	*148-8336*	1	CONNECTOR AS	
		1	**3J-1907**	1	SEAL-O-RING	
		1	**6V-8397**	1	SEAL-O-RING	
		1	**6V-8636**	1	CONNECTOR	
	22	1	*148-8433*	1	TEE AS	
		1	**6V-8397**	2	SEAL-O-RING	
		1	**6V-9836**	1	TEE-SWIVEL	
	23	1	**8T-7934**	2	WASHER-HARD (11X21X5-MM THK)	
B	24	1	**7K-1181**	4	STRAP-CABLE	
B	25	1	**6V-9829**	1	CAP (ORFS)	

B - USE AS REQUIRED
I - REFER TO HYDRAULIC INFORMATION SYSTEM
M - METRIC PART
Y - SEPARATE ILLUSTRATION

461-6000 **LINES GP-PILOT (**contd.**)** **i05949614**

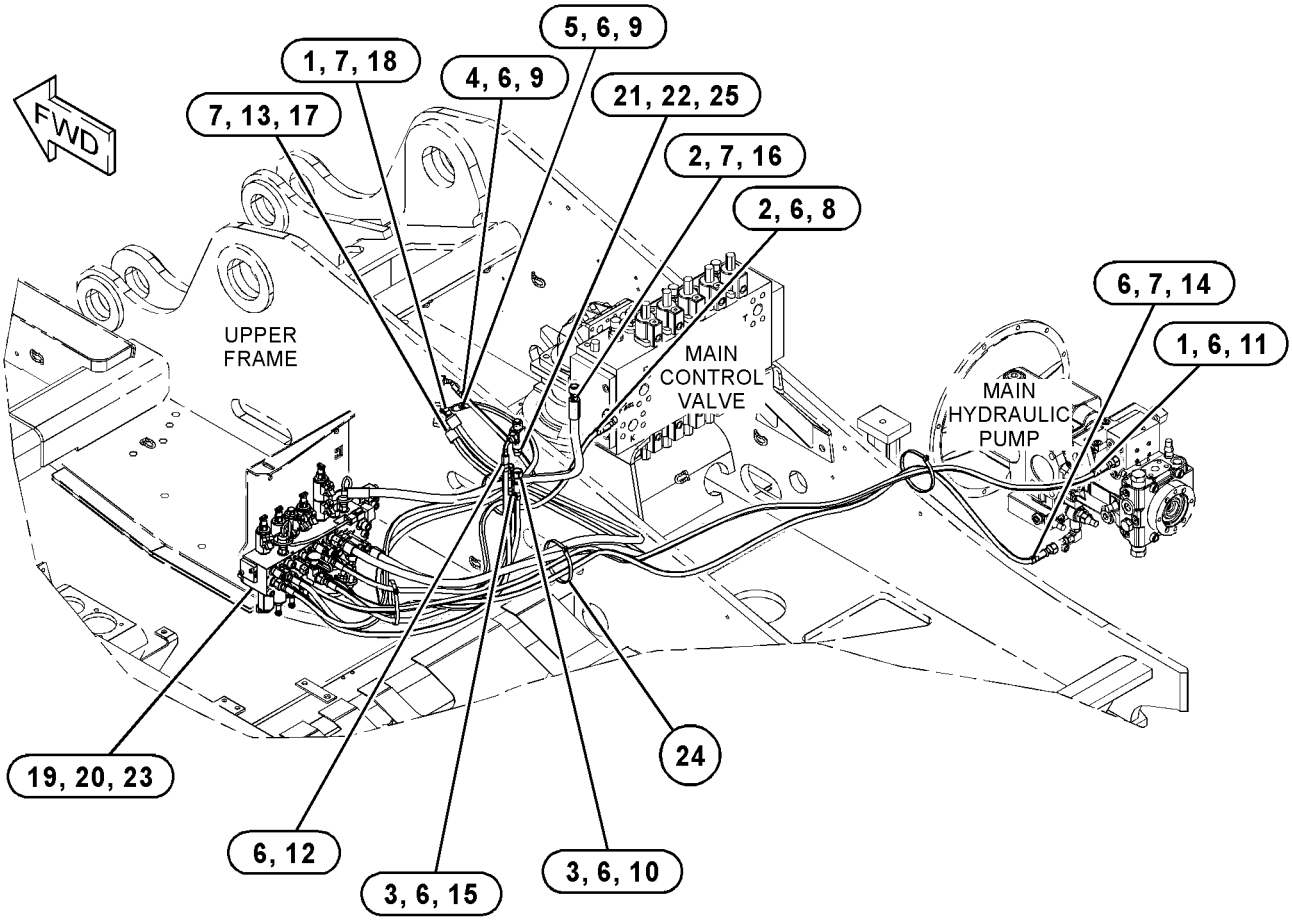

GRAPHIC #1 <END> g03744198

254-0485 LINES GP-PRESSURE TEST

S/N: CH91-UP
PART OF 449-2784 HYDRAULIC AR
ALSO AN ATTACHMENT

SMCS-5057 **i05934398**

NOTE	REF NO	GRAPHIC REF	PART NUMBER	QTY	PART NAME 1 2 3 4 5 6 (PRODUCT LEVEL)	SEE PAGE
	1	1	**8U-7203**	4	HOSE AS	
	2	1	**120-4162**	7	WASHER (19X34X3-MM THK)	
	3	1	**121-0528**	2	HOSE AS	
	4	1	**121-0530**	7	FITTING AS-HYDRAULIC (QUICK DISCONNECT)	
					(EACH INCLUDES)	
		1	**6V-8397**	1	SEAL-O-RING	
	5	1	**137-9629**	1	HOSE AS	
	6	1	*148-8336*	2	CONNECTOR AS	
					(EACH INCLUDES)	
		1	**3J-1907**	1	SEAL-O-RING	
		1	**6V-8397**	1	SEAL-O-RING	
		1	**6V-8636**	1	CONNECTOR	
	7	1	**6V-8397**	7	SEAL-O-RING	
	8	1	**6V-9168**	7	NUT (11/16-16-THD)	
B	9	1	**7K-1181**	4	STRAP-CABLE	

B - USE AS REQUIRED

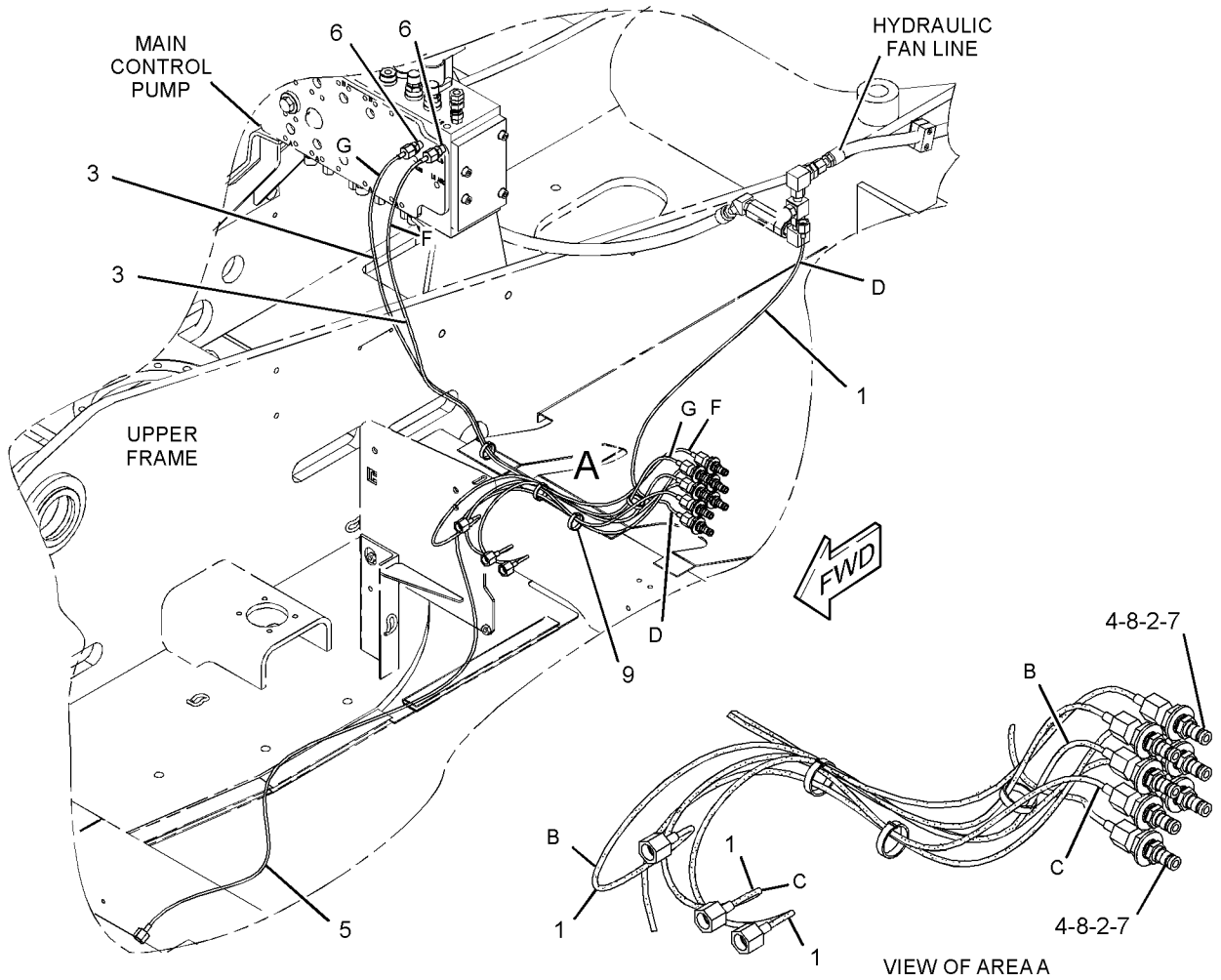

GRAPHIC #1 <END> g01367894

264-8996 LINES GP-PUMP

S/N: CH91-UP
PART OF 449-2784 HYDRAULIC AR
ALSO AN ATTACHMENT

SMCS-5057 **i07258750**

NOTE	REF NO	GRAPHIC REF	PART NUMBER	QTY	PART NAME 1 2 3 4 5 6 (PRODUCT LEVEL)	SEE PAGE
C	1	1	**6V-0852**	3	CAP-DUST	
C	2	1	**6V-4433**	2	FITTING	
	3	1	**8U-0284**	2	FLANGE-HALF	
	4	1	**107-4316**	1	FLANGE	
BC	5	1	**139-4016**	1	INSERT-RUBBER	
I	6	1	**190-8545**	1	HOSE AS	
I	7	1	**190-8546**	1	HOSE AS	
I	8	1	**190-8547**	1	HOSE AS	
I	9	1	**190-8548**	1	HOSE AS	
CI	10	1	**533-1626**	1	HOSE AS	
	11	1	**241-3125**	1	HOSE	
	12	1	**330-4655**	1	TUBE AS	
	13	1	**110-6349**	1	FITTING AS (QUICK DISCONNECT)	
		1	**3J-7354**	1	SEAL-O-RING	
	14	1	**117-1266**	1	SEAL-O-RING	
	15	1	**139-5751**	1	CLAMP-SINGLE	
	16	1	*148-8339*	1	CONNECTOR AS	
		1	**6V-8716**	1	CONNECTOR (STRAIGHT)	
		1	**6V-9746**	1	SEAL-O-RING	
		1	**7M-8485**	1	SEAL-O-RING	
	17	1	*148-8370*	1	ELBOW AS	
		1	**6V-8398**	1	SEAL-O-RING	
		1	**6V-9851**	1	ELBOW	
	18	1	**148-8412**	2	REDUCER AS	
					(EACH INCLUDES)	
		1	**6V-8398**	1	SEAL-O-RING	
		1	**6V-8944**	1	REDUCER	
C	19	1	*150-4043*	1	CONNECTOR AS	
		1	**3J-1907**	1	SEAL-O-RING	
		1	**6V-8398**	1	SEAL-O-RING	
		1	**6V-9873**	1	CONNECTOR	
	20	1	*153-6243*	1	TEE AS	
		1	**2S-4078**	1	SEAL-O-RING	
		1	**5K-9090**	1	SEAL-O-RING	
		1	**6V-9746**	1	SEAL-O-RING	
		1	**8T-1120**	1	TEE-O-RING PORT	
	21	1	*153-6262*	1	UNION AS	
		1	**5K-9090**	2	SEAL-O-RING	
		1	**6V-8734**	1	UNION	
	22	1	*164-5577*	1	ELBOW AS	
		1	**5K-9090**	2	SEAL-O-RING	
		1	**6V-8984**	1	ELBOW	
	23	1	**1P-3703**	1	SEAL-RECTANGULAR	
	24	1	**1P-3704**	1	SEAL-RECTANGULAR	
C	25	1	**3J-1907**	2	SEAL-O-RING	
	27	1	**4J-0520**	1	SEAL-O-RING	
	28	1	**6V-0400**	2	FLANGE-HALF	

264-8996 **LINES GP-PUMP** (contd.) **i07258750**

NOTE	REF NO	GRAPHIC REF	PART NUMBER	QTY	PART NAME 1 2 3 4 5 6 (PRODUCT LEVEL)	SEE PAGE
	29	1	**6V-0401**	2	FLANGE-HALF	
	30	1	**6V-9172**	1	NUT (1-7/16-12-THD)	
	31	1	**7X-0510**	4	WASHER-HARD (15.5X29X3-MM THK)	
M	32	1	**8C-6855**	4	BOLT (M14X2X45-MM)	
M	33	1	**8T-4183**	4	BOLT (M12X1.75X40-MM)	
M	34	1	**8T-4194**	4	BOLT (M12X1.75X50-MM)	
	35	1	**8T-4223**	4	WASHER-HARD (13.5X25.5X3-MM THK)	
CM	36	1	**107-9403**	4	BOLT-SOCKET HEAD (M16X2X35-MM)	
M	37	1	**8T-5005**	2	BOLT (M10X1.5X70-MM)	
	38	1	**8T-6726**	2	CLAMP-HOSE	
	39	1	**9X-6579**	2	NUT-ORIFICE (7/16-12-THD)	
C	40	1	*148-8443*	1	TEE AS	
		1	**3J-1907**	1	SEAL-O-RING	
		1	**6V-8397**	1	SEAL-O-RING	
		1	**7X-2459**	1	ADAPTER-TEE	

B - USE AS REQUIRED
C - CHANGE FROM PREVIOUS TYPE
I - REFER TO HYDRAULIC INFORMATION SYSTEM
M - METRIC PART

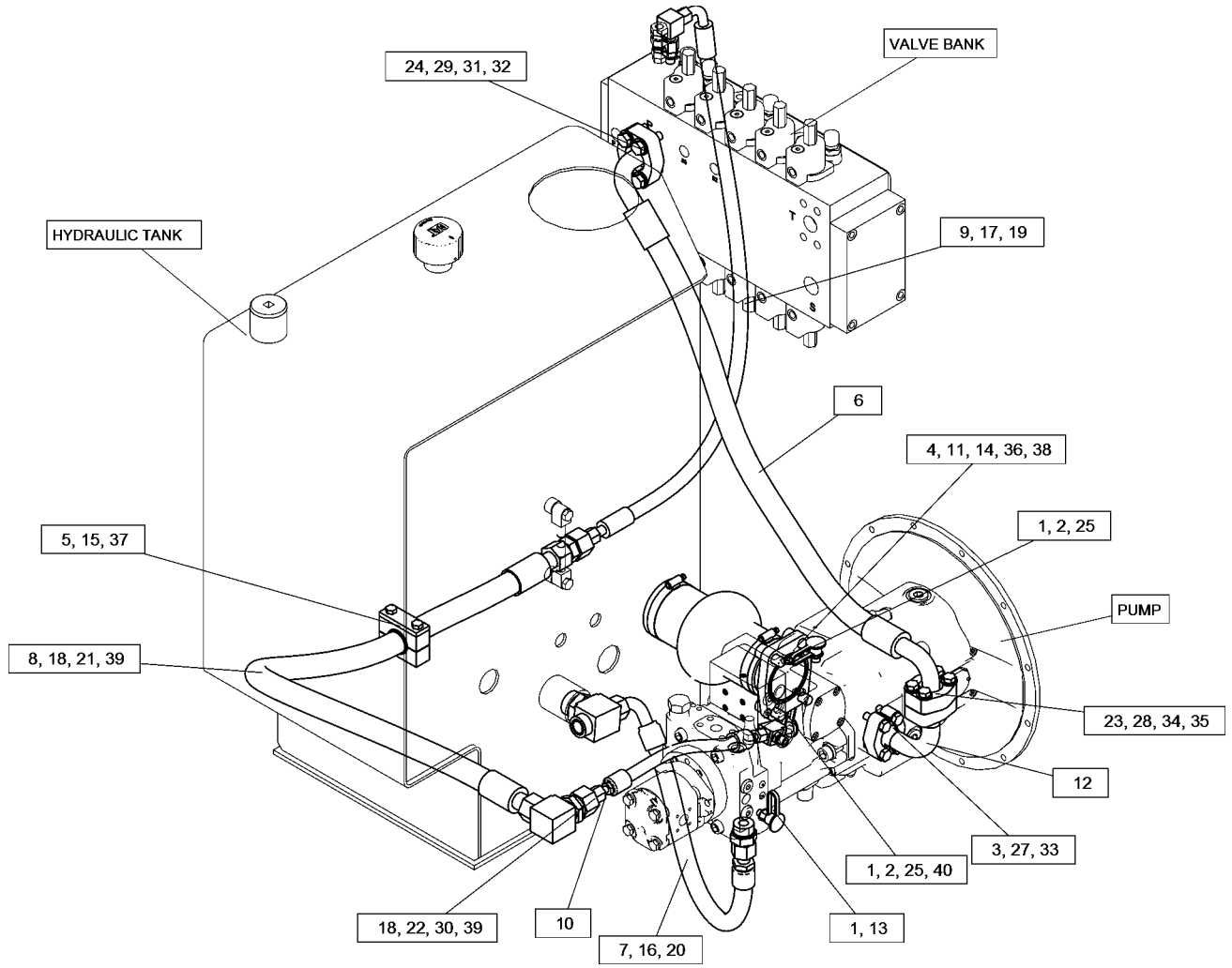

GRAPHIC #1 <END> g06263384

251-7950 LINES GP-RETURN

S/N: CH91-UP
PART OF 449-2784 HYDRAULIC AR
ALSO AN ATTACHMENT

SMCS-5057 **i05934400**

NOTE	REF NO	GRAPHIC REF	PART NUMBER	QTY	PART NAME 1 2 3 4 5 6 (PRODUCT LEVEL)	SEE PAGE
Y	1	1	**8U-0198**	2	FILTER GP-OIL (IN-LINE) (HYDRAULIC PUMP CASE DRAIN)	389
I	2	1	**113-0440**	1	HOSE AS	
I	3	1	**117-6716**	1	HOSE AS	
I	4	1	**138-7948**	1	HOSE AS	
I	5	1	**139-7392**	1	HOSE AS	
I	6	1	**166-8553**	1	HOSE AS	
C	7	1	*235-3599*	1	CONNECTOR AS	
		1	**3D-2824**	1	SEAL-O-RING	
		1	**6V-9746**	1	SEAL-O-RING	
		1	**185-6632**	1	CONNECTOR	
	8	1	**194-7845**	1	HOSE AS	
I	9	1	**203-1926**	1	HOSE AS	
I	10	1	**250-1656**	1	HOSE AS	
	11	1	**254-2649**	1	BLOCK-MANIFOLD	
	12	1	*268-1555*	1	CONNECTOR AS	
		1	**6V-8397**	1	SEAL-O-RING	
		1	**8T-7524**	1	SEAL-O-RING	
		1	**268-1554**	1	CONNECTOR	
I	13	1	**188-6374**	1	HOSE AS	
I	14	1	**138-1898**	1	HOSE AS	
	15	1	*148-8343*	1	CONNECTOR AS	
		1	**2M-9780**	1	SEAL-O-RING	
		1	**6V-8397**	1	SEAL-O-RING	
		1	**9X-6550**	1	CONNECTOR	
	16	1	*148-8322*	1	CONNECTOR AS	
		1	**2M-9780**	1	SEAL-O-RING	
		1	**6V-8640**	1	CONNECTOR	
		1	**6V-9746**	1	SEAL-O-RING	
	17	1	*148-8324*	1	CONNECTOR AS	
		1	**3K-0360**	1	SEAL-O-RING	
		1	**6V-9746**	1	SEAL-O-RING	
		1	**6V-9874**	1	CONNECTOR (STRAIGHT)	
	18	1	*148-8327*	2	CONNECTOR AS	
					(EACH INCLUDES)	
		1	**3D-2824**	1	SEAL-O-RING	
		1	**6V-8637**	1	CONNECTOR	
		1	**6V-9746**	1	SEAL-O-RING	
	19	1	*148-8336*	3	CONNECTOR AS	
					(EACH INCLUDES)	
		1	**3J-1907**	1	SEAL-O-RING	
		1	**6V-8397**	1	SEAL-O-RING	
		1	**6V-8636**	1	CONNECTOR	
	20	1	*148-8367*	1	ELBOW AS	
		1	**6V-8397**	1	SEAL-O-RING	
		1	**6V-9850**	1	ELBOW	
	21	1	*148-8378*	1	ELBOW AS	

251-7950 **LINES GP-RETURN** (contd.) **i05934400**

NOTE	REF NO	GRAPHIC REF	PART NUMBER	QTY	PART NAME 1 2 3 4 5 6 (PRODUCT LEVEL)	SEE PAGE
		1	**3J-1907**	1	SEAL-O-RING	
		1	**6V-8397**	1	SEAL-O-RING	
		1	**6V-8724**	1	ELBOW	
	22	1	*148-8433*	1	TEE AS	
		1	**6V-8397**	2	SEAL-O-RING	
		1	**6V-9836**	1	TEE-SWIVEL	
	23	1	*148-8434*	1	TEE AS	
		1	**6V-8397**	2	SEAL-O-RING	
		1	**6V-9843**	1	TEE	
	24	1	*148-8436*	1	TEE AS	
		1	**3K-0360**	1	SEAL-O-RING	
		1	**6V-8398**	2	SEAL-O-RING	
		1	**6V-8775**	1	TEE-FACE SEAL	
	25	1	*150-4033*	1	ADAPTER AS	
		1	**6V-9746**	2	SEAL-O-RING	
		1	**6V-9846**	1	TEE	
	26	1	*150-4044*	1	CONNECTOR AS	
		1	**3J-1907**	1	SEAL-O-RING	
		1	**6V-8397**	1	SEAL-O-RING	
		1	**8T-1779**	1	CONNECTOR	
	27	1	*162-0177*	2	PLUG AS	
					(EACH INCLUDES)	
		1	**3J-1907**	1	SEAL-O-RING	
		1	**9S-8004**	1	PLUG (9/16-18-THD)	
	28	1	**1P-4578**	2	FLANGE-HALF	
	29	1	**1P-4579**	4	FLANGE-HALF	
	30	1	**2J-2668**	1	COVER-FLANGE	
	31	1	**3D-2824**	2	SEAL-O-RING	
	32	1	**4J-0522**	1	SEAL-O-RING	
	33	1	**4J-0524**	2	SEAL-O-RING	
	34	1	**6V-8397**	1	SEAL-O-RING	
	36	1	**6V-9829**	1	CAP (ORFS)	
	37	1	**6V-9830**	1	CAP (ORFS)	
	38	1	**7X-0613**	2	WASHER-HARD (8.8X25.5X5-MM THK)	
	39	1	**8T-4121**	4	WASHER-HARD (11X21X2.5-MM THK)	
M	40	1	**8T-4183**	8	BOLT (M12X1.75X40-MM)	
M	41	1	**8T-4196**	4	BOLT (M10X1.5X35-MM)	
	42	1	**8T-4223**	8	WASHER-HARD (13.5X25.5X3-MM THK)	
	43	1	**8T-6725**	1	CONNECTOR	
	44	1	**8T-6850**	1	SEAL-O-RING	
M	45	1	**8T-6912**	2	BOLT (M8X1.25X50-MM)	
	46	1	**9X-7454**	2	SEAL-O-RING	

C - CHANGE FROM PREVIOUS TYPE
I - REFER TO HYDRAULIC INFORMATION SYSTEM
M - METRIC PART
Y - SEPARATE ILLUSTRATION

251-7950 **LINES GP-RETURN (**contd.**)** **i05934400**

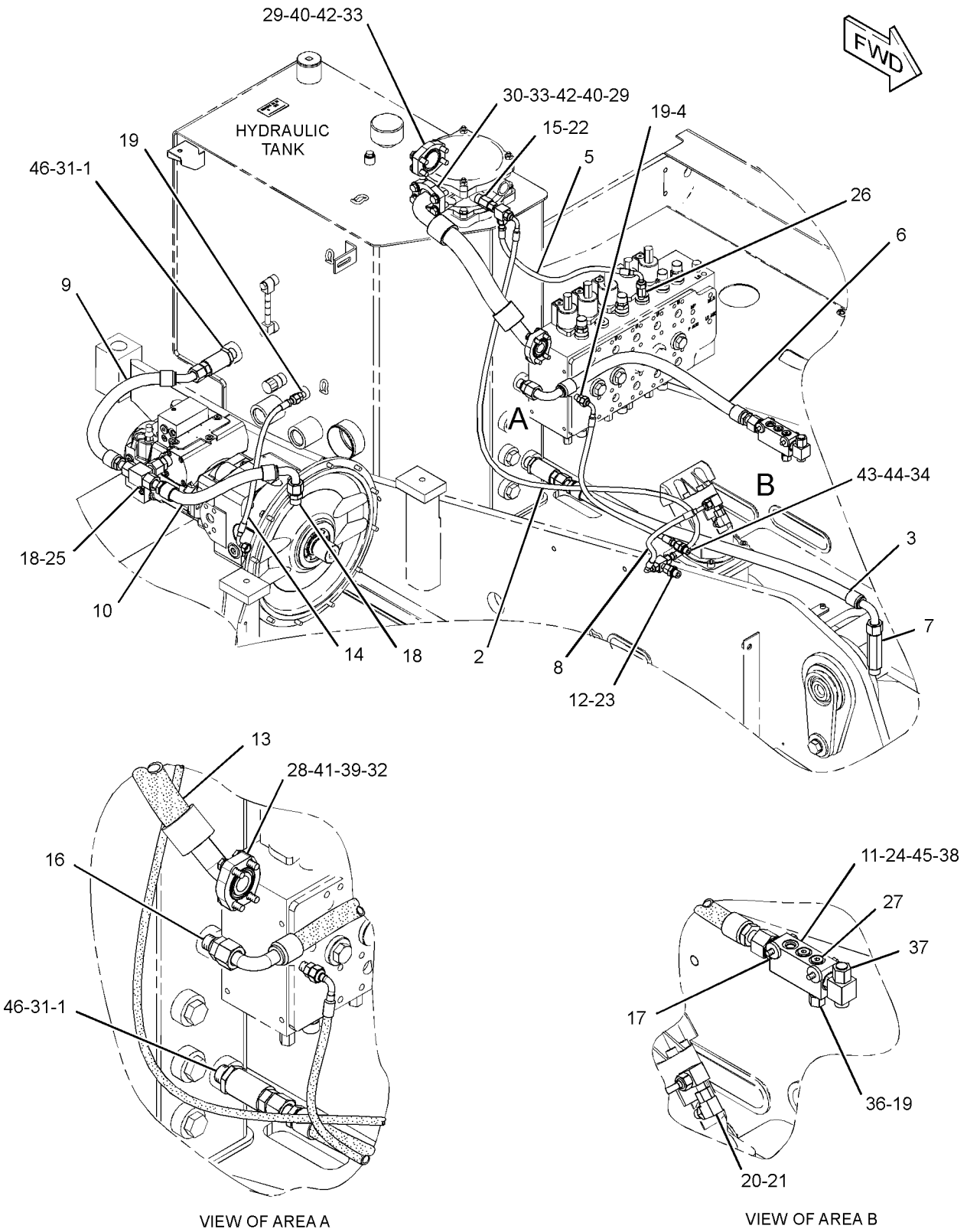

GRAPHIC #1 <END> g03223898

475-2053 LINES GP-RETURN

S/N: CH91-UP
PART OF 449-2784 HYDRAULIC AR
ALSO AN ATTACHMENT

SMCS-5057 **i06758725**

NOTE	REF NO	GRAPHIC REF	PART NUMBER	QTY	PART NAME 1 2 3 4 5 6 (PRODUCT LEVEL)	SEE PAGE
I	1	1	**113-0440**	1	HOSE AS	
I	2	2	**117-6716**	1	HOSE AS	
I	3	2	**138-7948**	1	HOSE AS	
I	4	2	**139-7392**	1	HOSE AS	
	5	2	*148-8324*	1	CONNECTOR AS	
		2	**3K-0360**	1	SEAL-O-RING	
		2	**6V-9746**	1	SEAL-O-RING	
		2	**6V-9874**	1	CONNECTOR (STRAIGHT)	
I	6	2	**166-8553**	1	HOSE AS	
I	7	2	**188-6374**	1	HOSE AS	
	8	2	**194-7845**	1	HOSE AS	
I	9	2	**203-1926**	1	HOSE AS	
I	10	2	**250-1656**	1	HOSE AS	
	11	2	**254-2649**	1	BLOCK-MANIFOLD	
	12	2	*268-1555*	1	CONNECTOR AS	
		2	**6V-8397**	1	SEAL-O-RING	
		2	**8T-7524**	1	SEAL-O-RING	
		2	**268-1554**	1	CONNECTOR	
I	13	2	**138-1898**	1	HOSE AS	
	14	2	**443-1365**	2	FILTER AS-ENGINE OIL	
	15	2	*148-8322*	1	CONNECTOR AS	
		2	**2M-9780**	1	SEAL-O-RING	
		2	**6V-8640**	1	CONNECTOR	
		2	**6V-9746**	1	SEAL-O-RING	
	16	2	*148-8327*	2	CONNECTOR AS	
					(EACH INCLUDES)	
		2	**3D-2824**	1	SEAL-O-RING	
		2	**6V-8637**	1	CONNECTOR	
		2	**6V-9746**	1	SEAL-O-RING	
	17	2	*148-8336*	3	CONNECTOR AS	
					(EACH INCLUDES)	
		2	**3J-1907**	1	SEAL-O-RING	
		2	**6V-8397**	1	SEAL-O-RING	
		2	**6V-8636**	1	CONNECTOR	
	18	2	*148-8343*	1	CONNECTOR AS	
		2	**2M-9780**	1	SEAL-O-RING	
		2	**6V-8397**	1	SEAL-O-RING	
		2	**9X-6550**	1	CONNECTOR	
	19	2	*148-8367*	1	ELBOW AS	
		2	**6V-8397**	1	SEAL-O-RING	
		2	**6V-9850**	1	ELBOW	
	20	2	*148-8378*	1	ELBOW AS	
		2	**3J-1907**	1	SEAL-O-RING	
		2	**6V-8397**	1	SEAL-O-RING	
		2	**6V-8724**	1	ELBOW	
	21	2	*148-8433*	1	TEE AS	
		2	**6V-8397**	2	SEAL-O-RING	

475-2053 **LINES GP-RETURN (**contd.**)** **i06758725**

NOTE	REF NO	GRAPHIC REF	PART NUMBER	QTY	PART NAME 1 2 3 4 5 6 (PRODUCT LEVEL)	SEE PAGE
		2	**6V-9836**	1	TEE-SWIVEL	
	22	2	*148-8434*	1	TEE AS	
		2	**6V-8397**	2	SEAL-O-RING	
		2	**6V-9843**	1	TEE	
	23	2	*148-8436*	1	TEE AS	
		2	**3K-0360**	1	SEAL-O-RING	
		2	**6V-8398**	2	SEAL-O-RING	
		2	**6V-8775**	1	TEE-FACE SEAL	
	24	2	*150-4033*	1	ADAPTER AS	
		2	**6V-9746**	2	SEAL-O-RING	
		2	**6V-9846**	1	TEE	
	25	2	*150-4044*	1	CONNECTOR AS	
		2	**3J-1907**	1	SEAL-O-RING	
		2	**6V-8397**	1	SEAL-O-RING	
		2	**8T-1779**	1	CONNECTOR	
	26	2	*162-0177*	2	PLUG AS	
					(EACH INCLUDES)	
		2	**3J-1907**	1	SEAL-O-RING	
		2	**9S-8004**	1	PLUG (9/16-18-THD)	
	27	2	**1P-4578**	2	FLANGE-HALF	
	28	2	**1P-4579**	4	FLANGE-HALF	
	29	2	**282-5642**	1	CONNECTOR	
	30	2	**2J-2668**	1	COVER-FLANGE	
	31	2	**4J-0522**	1	SEAL-O-RING	
	32	2	**4J-0524**	2	SEAL-O-RING	
	33	2	**6V-8397**	1	SEAL-O-RING	
	34	2	**6V-9829**	1	CAP (ORFS)	
	35	2	**6V-9830**	1	CAP (ORFS)	
	36	2	**7X-0613**	2	WASHER-HARD (8.8X25.5X5-MM THK)	
	37	2	**8T-4121**	4	WASHER-HARD (11X21X2.5-MM THK)	
M	38	2	**8T-4183**	8	BOLT (M12X1.75X40-MM)	
M	39	2	**8T-4196**	4	BOLT (M10X1.5X35-MM)	
	40	2	**8T-4223**	8	WASHER-HARD (13.5X25.5X3-MM THK)	
	41	2	**8T-6725**	1	CONNECTOR	
	42	2	**8T-6850**	1	SEAL-O-RING	
M	43	2	**8T-6912**	2	BOLT (M8X1.25X50-MM)	

I - REFER TO HYDRAULIC INFORMATION SYSTEM
M - METRIC PART

475-2053 **LINES GP-RETURN (**contd.**)** **i06758725**

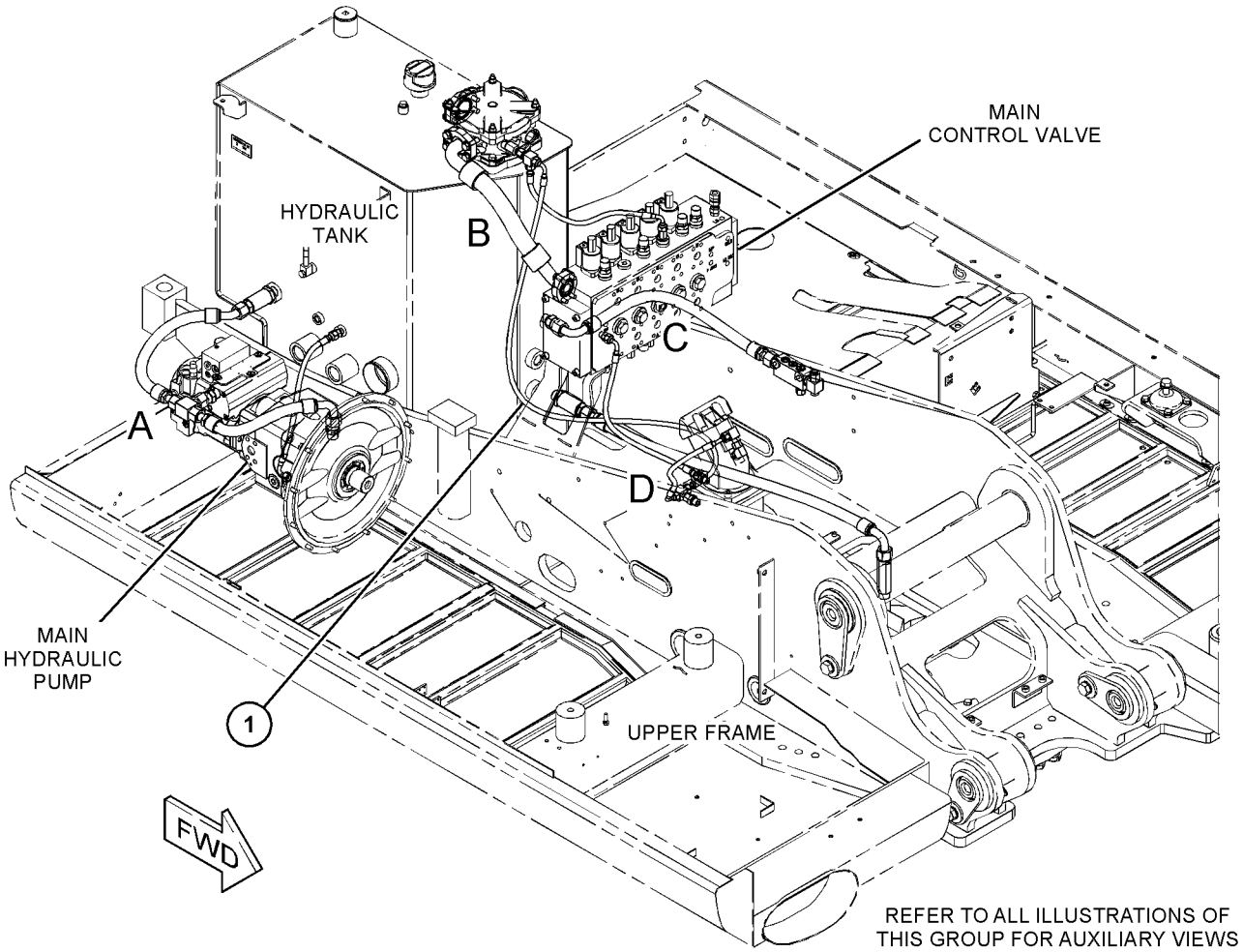

GRAPHIC #1 g06123234

475-2053 **LINES GP-RETURN (**contd.**)** **i06758725**

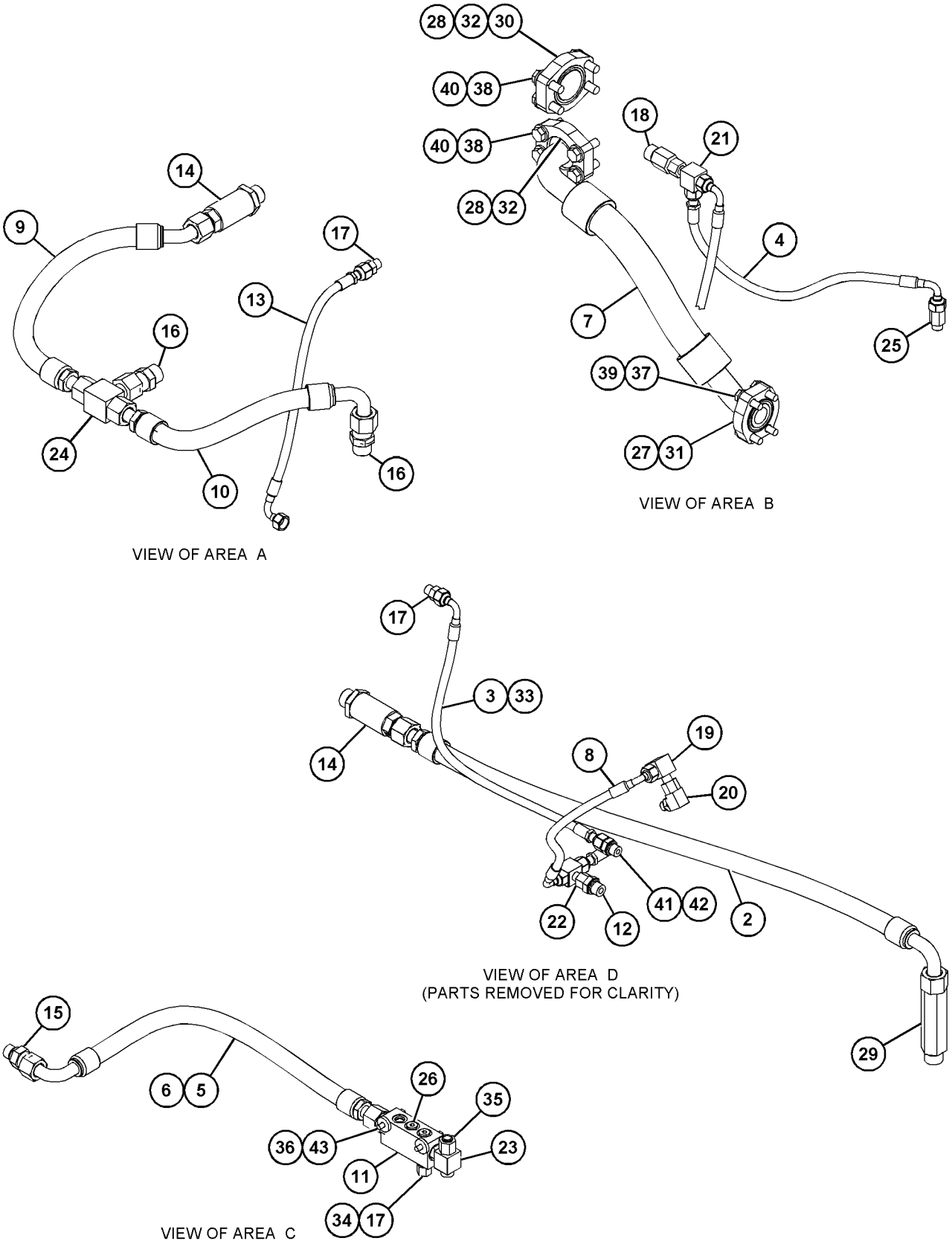

GRAPHIC #2 <END> g06123235

431-7217 LINES GP-RIDE CONTROL—VARIABLE ADJUSTABLE BOOM

S/N: CH91-UP
PART OF 446-2738 VALVE & LINES AR
AN ATTACHMENT

SMCS-5004, 5057, 5077, 5264 **i06225899**

NOTE	REF NO	GRAPHIC REF	PART NUMBER	QTY	PART NAME 1 2 3 4 5 6 (PRODUCT LEVEL)	SEE PAGE
Y	1	1	**295-7688**	1	VALVE GP-SOLENOID (RIDE CONTROL, HEAD END, LH)	712
Y	2	1	**295-7689**	1	VALVE GP-SOLENOID (RIDE CONTROL, HEAD END, RH)	713
	3	1	**295-8554**	1	BLOCK	
	4	1	**299-3657**	2	CLAMP	
Y	5	1	**299-3659**	1	VALVE GP-SOLENOID (RIDE CONTROL)	717
	6	1	**305-5899**	2	SPACER	
I	7	1	**310-5053**	1	HOSE AS	
	8	1	**317-3663**	1	BRACKET	
	9	1	**349-1178**	1	SENSOR-PRESSURE (ROD END)	
M	10	1	**101-7403**	8	BOLT-SOCKET HEAD (M10X1.5X80-MM)	
	11	1	*148-8341*	1	CONNECTOR AS	
		1	**3D-2824**	1	SEAL-O-RING	
		1	**6V-8713**	1	CONNECTOR	
		1	**7J-9108**	1	SEAL-O-RING	
	12	1	*153-6256*	1	ELBOW AS	
		1	**7J-9108**	1	SEAL-O-RING	
		1	**8C-7563**	1	ELBOW	
	13	1	*164-6872*	1	TEE AS	
		1	**2M-9780**	1	SEAL-O-RING	
		1	**6V-8398**	2	SEAL-O-RING	
		1	**115-8634**	1	TEE-O-RING	
	14	1	*194-9390*	2	CLAMP GP-HYDRAULIC LINES	
					(EACH INCLUDES)	
		1	**194-9388**	2	CLAMP	
		1	**194-9389**	1	PLATE	
	15	1	*198-0143*	1	ELBOW AS	
		1	**7J-9108**	1	SEAL-O-RING	
		1	**157-2348**	1	ELBOW	
	16	1	**1P-3703**	1	SEAL-RECTANGULAR	
M	17	1	**271-7649**	2	BOLT (M10X1.5X95-MM)	
	18	1	**287-7334**	1	FLANGE	
	19	1	**293-9452**	1	MOUNTING-CABLE TIE	
M	20	1	**297-8107**	1	BOLT (M10X1.5X105-MM)	
	21	1	**3J-1907**	1	SEAL-O-RING	
M	22	1	**8T-3844**	3	BOLT (M6X1X70-MM)	
	23	1	**8T-4121**	1	WASHER-HARD (11X21X2.5-MM THK)	
M	24	1	**8T-4133**	1	NUT (M10X1.5-THD)	
M	25	1	**8T-4136**	1	BOLT (M10X1.5X25-MM)	
M	26	1	**8T-6685**	1	BOLT (M10X1.5X110-MM)	
M	27	1	**8T-6868**	4	BOLT (M12X1.75X80-MM)	
M	28	1	**8T-6974**	1	BOLT (M6X1X80-MM)	
	29	1	**9X-8256**	1	WASHER (6.6X12X2-MM THK)	
Y	30	1	*340-3267*	2	ACCUMULATOR GP (CHARGED)	324

I - REFER TO HYDRAULIC INFORMATION SYSTEM
M - METRIC PART
Y - SEPARATE ILLUSTRATION

431-7217 **LINES GP-RIDE CONTROL (**contd.**)** **i06225899**

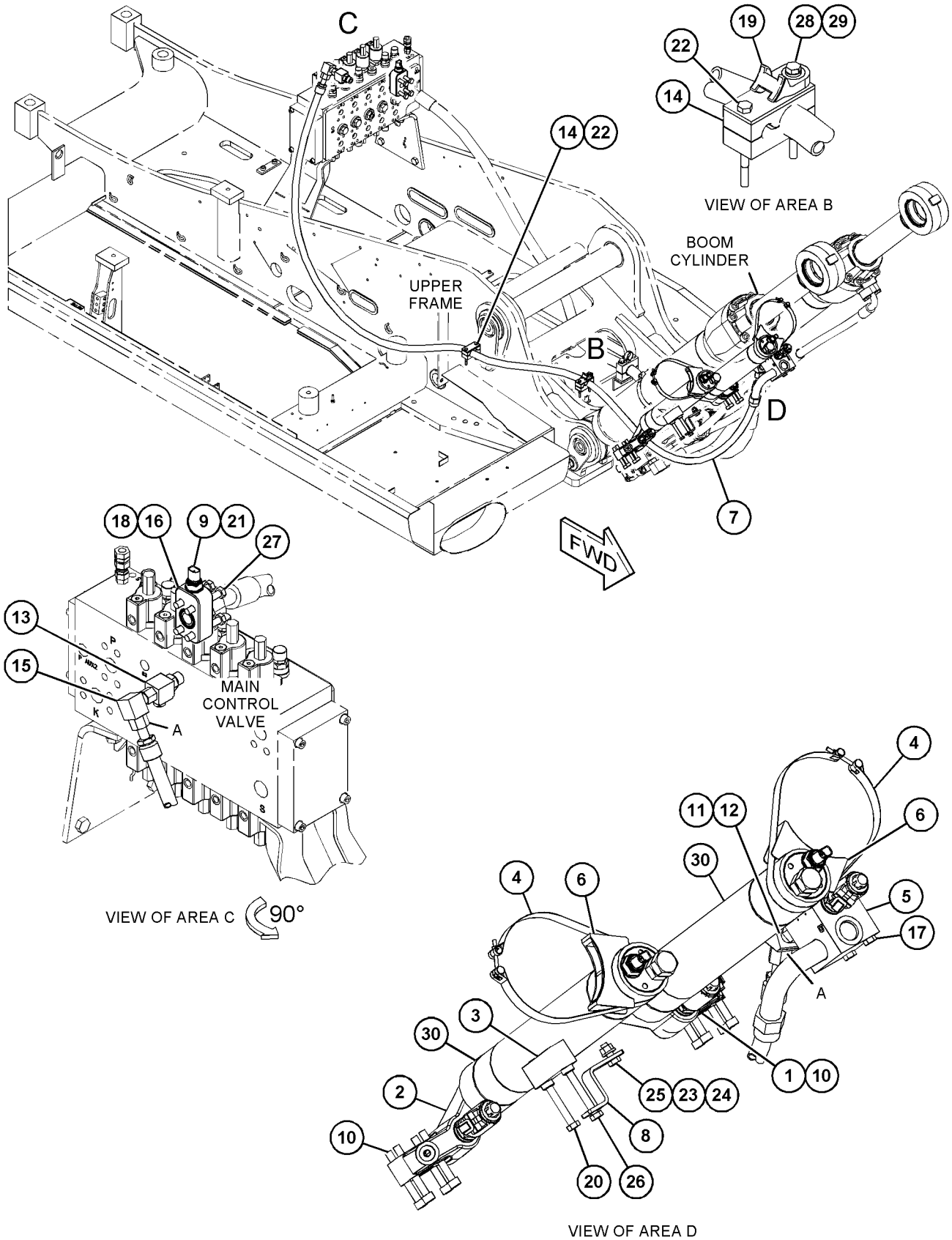

GRAPHIC #1 <END> g03571396

363-8923 LINES GP-STABILIZER—FRONT

S/N: CH91-UP
PART OF 455-4597 STABILIZER AR
AN ATTACHMENT

SMCS-5057, 5468 **i05925974**

NOTE	REF NO	GRAPHIC REF	PART NUMBER	QTY	PART NAME 1 2 3 4 5 6 (PRODUCT LEVEL)	SEE PAGE
I	1	1	**178-9029**	1	HOSE AS	
M	2	1	**194-6989**	2	ORIFICE	
Y	3	1	**196-7543**	1	VALVE GP-SOLENOID (STABILIZER)	704
	4	1	**206-2423**	2	SADDLE-MOUNTING	
M	5	1	**298-6020**	2	BOLT-SOCKET HEAD (M8X1.25X60-MM)	
I	6	1	**340-0263**	1	HOSE AS	
I	7	1	**340-0264**	1	HOSE AS	
	8	1	**359-5080**	1	BLOCK-MANIFOLD	
	9	1	*359-5087*	4	ADAPTER AS	
					(EACH INCLUDES)	
		1	**3K-0360**	1	SEAL-O-RING	
		1	**6V-8397**	1	SEAL-O-RING	
		1	**359-5079**	1	ADAPTER	
	10	1	*204-0317*	1	CONNECTOR AS	
		1	**3K-0360**	1	SEAL-O-RING	
		1	**6V-8397**	1	SEAL-O-RING	
		1	**092-3635**	1	CONNECTOR	
	11	1	**129-9959**	1	CLAMP	
	12	1	**117-1823**	2	CLAMP-SINGLE	
	13	1	*148-8318*	1	CONNECTOR AS	
		1	**3K-0360**	1	SEAL-O-RING	
		1	**6V-8397**	1	SEAL-O-RING	
		1	**6V-8634**	1	CONNECTOR	
	14	1	*148-8336*	2	CONNECTOR AS	
					(EACH INCLUDES)	
		1	**3J-1907**	1	SEAL-O-RING	
		1	**6V-8397**	1	SEAL-O-RING	
		1	**6V-8636**	1	CONNECTOR	
	15	1	*148-8374*	1	ELBOW AS	
		1	**3K-0360**	1	SEAL-O-RING	
		1	**6V-8397**	1	SEAL-O-RING	
		1	**6V-8723**	1	ELBOW	
	16	1	*148-8378*	3	ELBOW AS	
					(EACH INCLUDES)	
		1	**3J-1907**	1	SEAL-O-RING	
		1	**6V-8397**	1	SEAL-O-RING	
		1	**6V-8724**	1	ELBOW	
	17	1	*148-8395*	1	PLUG AS	
		1	**3K-0360**	1	SEAL-O-RING	
		1	**9S-8005**	1	PLUG (3/4-16-THD)	
	18	1	*164-5605*	1	CONNECTOR AS	
		1	**3K-0360**	1	SEAL-O-RING	
		1	**6V-8397**	1	SEAL-O-RING	
		1	**8T-0076**	1	CONNECTOR	
	21	1	**7K-1181**	4	STRAP-CABLE	
M	22	1	**7X-2534**	2	BOLT (M6X1X50-MM)	
I	23	1	**269-2394**	2	HOSE AS	

363-8923 **LINES GP-STABILIZER (**contd.**)** **i05925974**

NOTE	REF NO	GRAPHIC REF	PART NUMBER	QTY	PART NAME 1 2 3 4 5 6 (PRODUCT LEVEL)	SEE PAGE
I	24	1	**359-6672**	2	HOSE AS	
	25	1	**193-9063**	1	SWITCH AS-ROCKER (LEFT STABILIZER)	
	26	1	**193-9064**	1	SWITCH AS-ROCKER (RIGHT STABILIZER)	
					(EACH SWITCH AS-ROCKER INCLUDES)	
		1	**111-7899**	1	GASKET	

I - REFER TO HYDRAULIC INFORMATION SYSTEM
M - METRIC PART
Y - SEPARATE ILLUSTRATION

363-8923 **LINES GP-STABILIZER (**contd.**)** **i05925974**

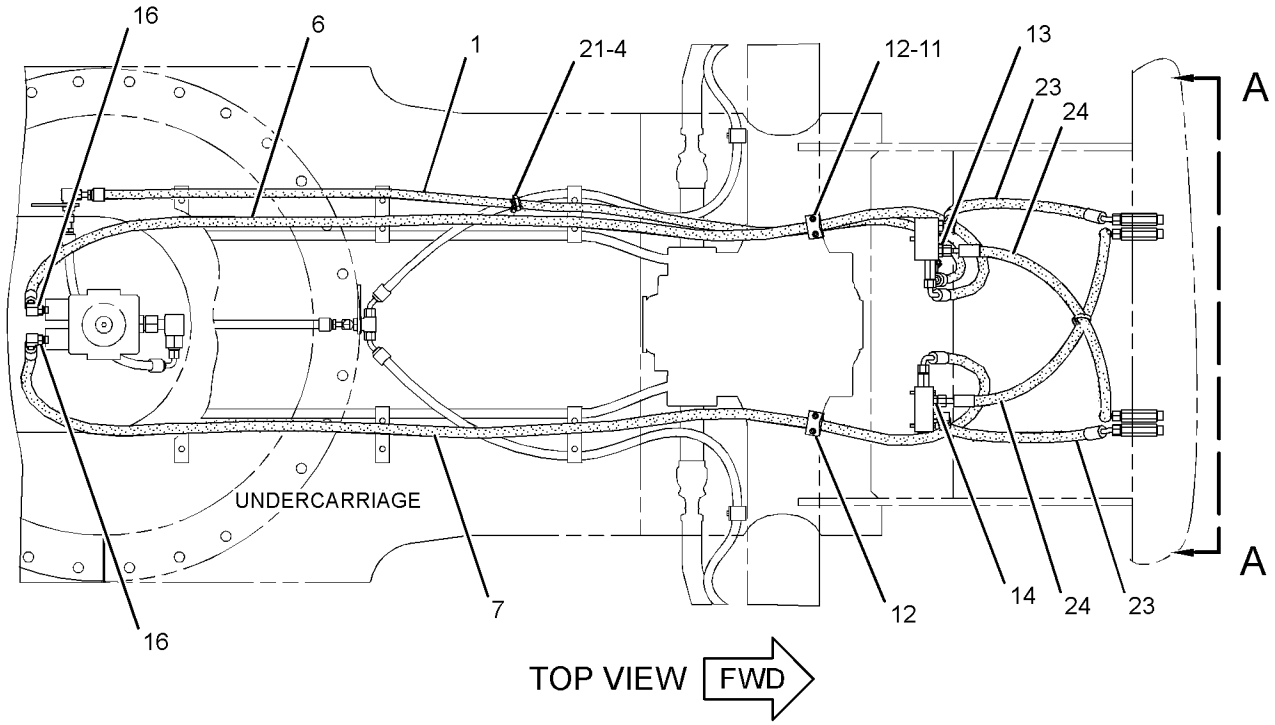

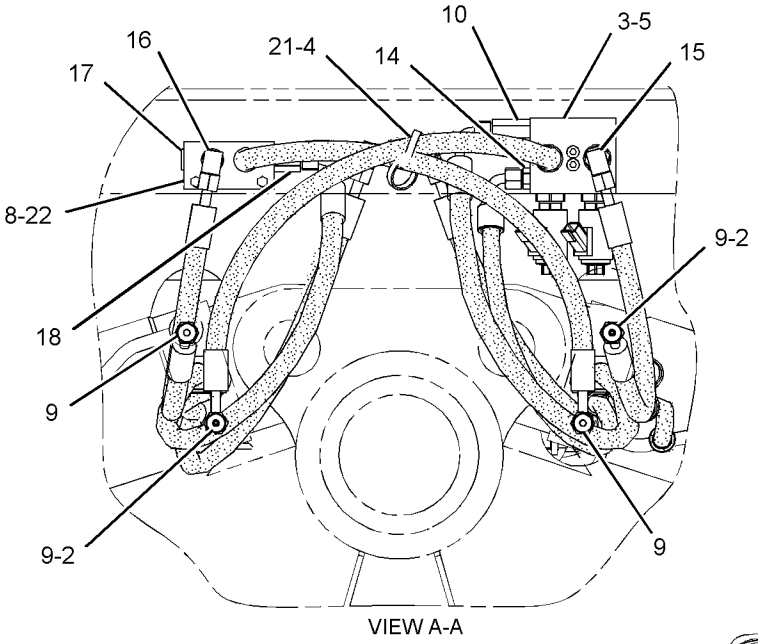

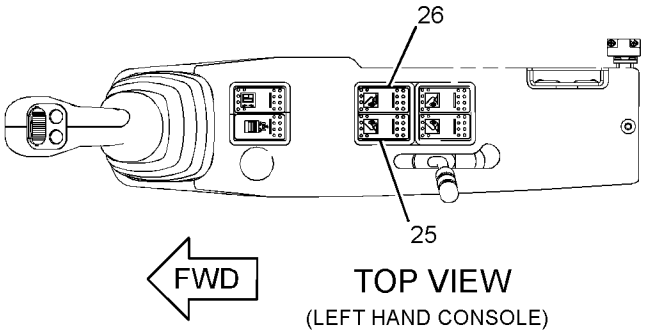

GRAPHIC #1 <END> g03022438

363-8926 LINES GP-STABILIZER–REAR

S/N: CH91-UP
PART OF 354-7130 STABILIZER AR
AN ATTACHMENT

SMCS-5057, 5468 **i05924152**

NOTE	REF NO	GRAPHIC REF	PART NUMBER	QTY	PART NAME 1 2 3 4 5 6 (PRODUCT LEVEL)	SEE PAGE
M	1	1	**194-6989**	2	ORIFICE	
Y	2	1	**196-7543**	1	VALVE GP-SOLENOID (STABILIZER)	704
	3	1	**206-2423**	1	SADDLE-MOUNTING	
M	4	1	**298-6020**	2	BOLT-SOCKET HEAD (M8X1.25X60-MM)	
I	5	2	**359-1162**	1	HOSE AS	
	6	1	**359-5080**	1	BLOCK-MANIFOLD	
	7	1	*359-5087*	4	ADAPTER AS	
					(EACH INCLUDES)	
		1	**3K-0360**	1	SEAL-O-RING	
		1	**6V-8397**	1	SEAL-O-RING	
		1	**359-5079**	1	ADAPTER	
	8	1	*204-0317*	1	CONNECTOR AS	
		1	**3K-0360**	1	SEAL-O-RING	
		1	**6V-8397**	1	SEAL-O-RING	
		1	**092-3635**	1	CONNECTOR	
	9	2	**129-9959**	1	CLAMP	
	10	2	**117-1823**	4	CLAMP-SINGLE	
	11	1	*148-8318*	1	CONNECTOR AS	
		1	**3K-0360**	1	SEAL-O-RING	
		1	**6V-8397**	1	SEAL-O-RING	
		1	**6V-8634**	1	CONNECTOR	
	12	1	*148-8336*	2	CONNECTOR AS	
					(EACH INCLUDES)	
		1	**3J-1907**	1	SEAL-O-RING	
		1	**6V-8397**	1	SEAL-O-RING	
		1	**6V-8636**	1	CONNECTOR	
	13	1	*148-8374*	1	ELBOW AS	
		1	**3K-0360**	1	SEAL-O-RING	
		1	**6V-8397**	1	SEAL-O-RING	
		1	**6V-8723**	1	ELBOW	
	14	1,2	*148-8378*	2	ELBOW AS	
					(EACH INCLUDES)	
		1,2	**3J-1907**	1	SEAL-O-RING	
		1,2	**6V-8397**	1	SEAL-O-RING	
		1,2	**6V-8724**	1	ELBOW	
	15	1	*148-8395*	1	PLUG AS	
		1	**3K-0360**	1	SEAL-O-RING	
		1	**9S-8005**	1	PLUG (3/4-16-THD)	
	16	1	*164-5605*	1	CONNECTOR AS	
		1	**3K-0360**	1	SEAL-O-RING	
		1	**6V-8397**	1	SEAL-O-RING	
		1	**8T-0076**	1	CONNECTOR	
	19	1	**7K-1181**	2	STRAP-CABLE	
M	20	1	**7X-2534**	2	BOLT (M6X1X50-MM)	
	21	2	**8M-2773**	1	CLIP (LOOP)	
I	22	2	**240-6964**	2	HOSE AS	
I	23	1	**269-2394**	2	HOSE AS	

363-8926 **LINES GP-STABILIZER (**contd.**)** **i05924152**

NOTE	REF NO	GRAPHIC REF	PART NUMBER	QTY	PART NAME 1 2 3 4 5 6 (PRODUCT LEVEL)	SEE PAGE
I	24	1	**359-6672**	2	HOSE AS	
	25	2	**193-9063**	1	SWITCH AS-ROCKER (LEFT STABILIZER)	
	26	2	**193-9064**	1	SWITCH AS-ROCKER (RIGHT STABILIZER)	
					(EACH SWITCH AS INCLUDES)	
		2	**111-7899**	1	GASKET	
	28	2	*150-3036*	1	ELBOW AS	
		2	**3J-1907**	1	SEAL-O-RING	
		2	**6V-8397**	1	SEAL-O-RING	
		2	**8T-1905**	1	ELBOW	

I - REFER TO HYDRAULIC INFORMATION SYSTEM
M - METRIC PART
Y - SEPARATE ILLUSTRATION

363-8926 **LINES GP-STABILIZER (**contd.**)** **i05924152**

REFER TO ALL ILLUSTRATIONS OF
THIS GROUP FOR AUXILIARY VIEWS

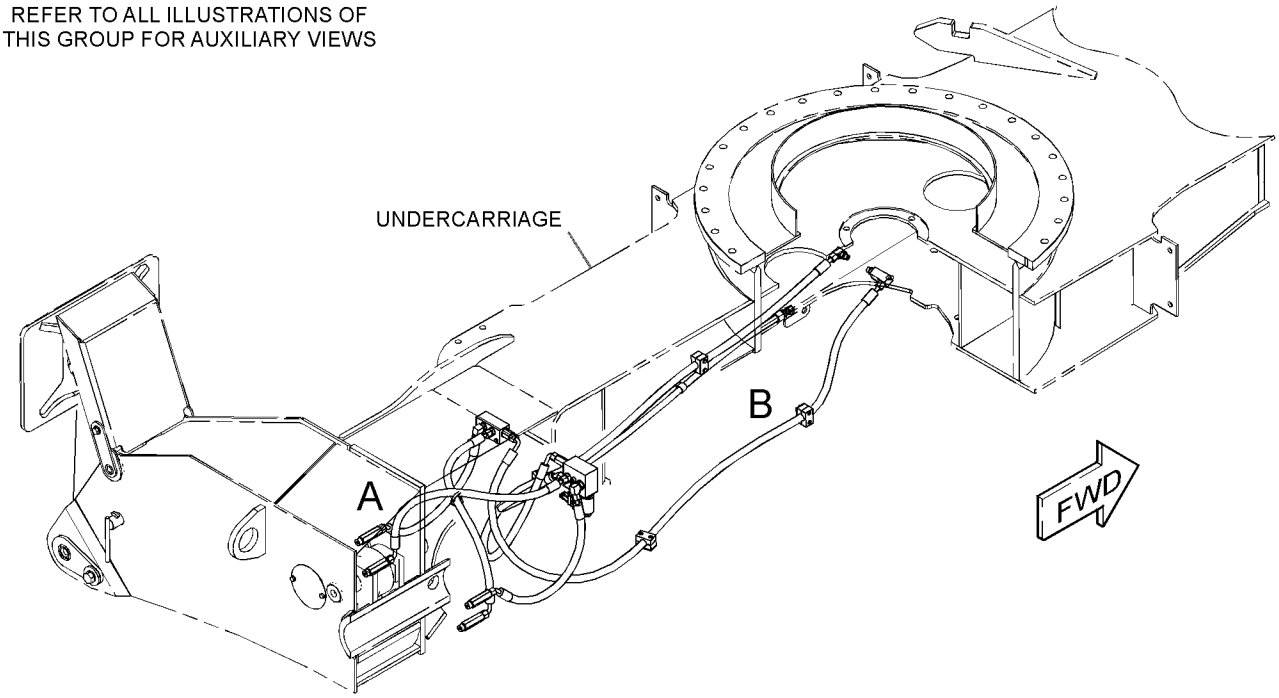

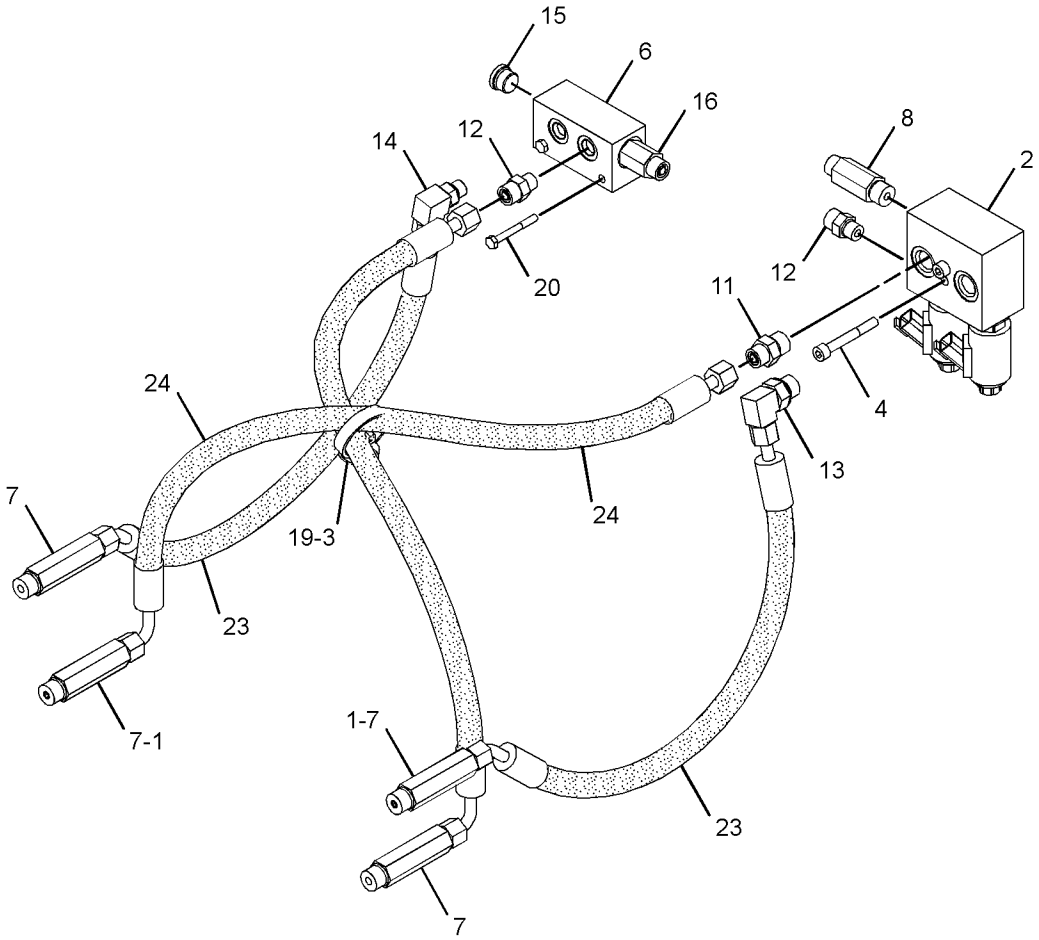

VIEW OF AREA A

GRAPHIC #1 g03015657

363-8926 **LINES GP-STABILIZER (**contd.**)** **i05924152**

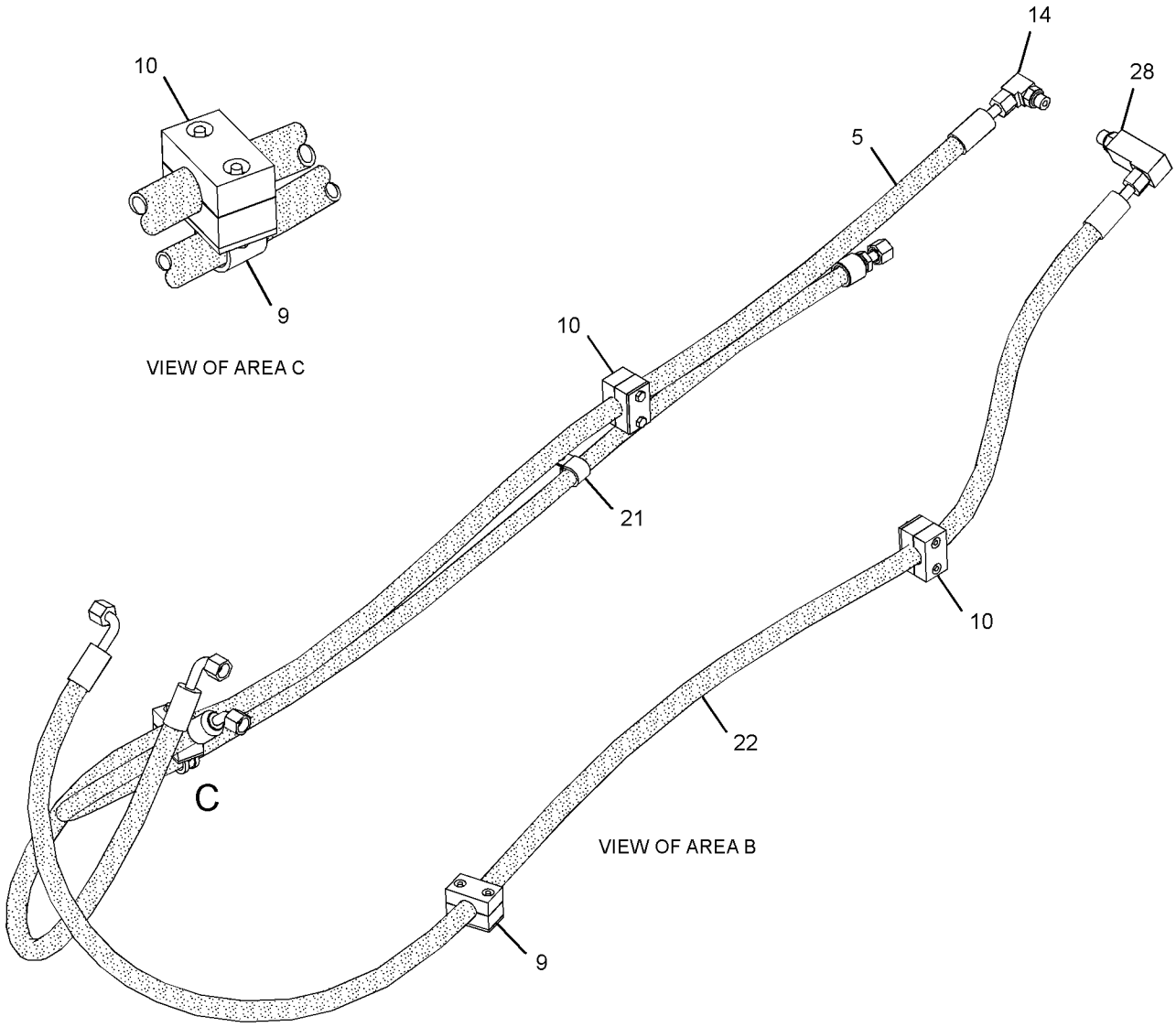

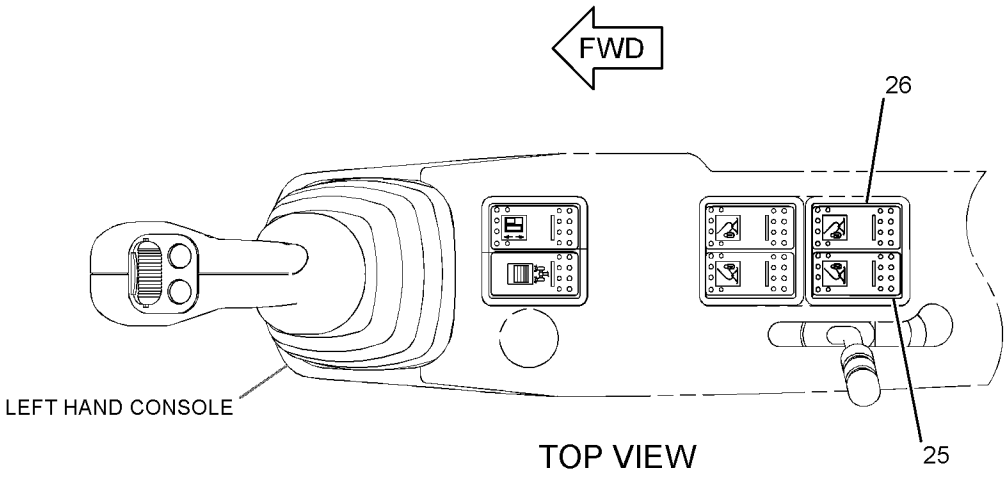

GRAPHIC #2 <END> g03015658

479-4267 LINES GP-STABILIZER—FRONT

S/N: CH91-UP
PART OF 455-4597 STABILIZER AR
AN ATTACHMENT

SMCS-5057, 5468 **i06251643**

NOTE	REF NO	GRAPHIC REF	PART NUMBER	QTY	PART NAME 1 2 3 4 5 6 (PRODUCT LEVEL)	SEE PAGE
	1	1	**7K-1181**	4	STRAP-CABLE	
	2	1	**193-9063**	1	SWITCH AS-ROCKER (LEFT STABILIZER)	
	3	1	**193-9064**	1	SWITCH AS-ROCKER (RIGHT STABILIZER)	
					(EACH SWITCH AS INCLUDES)	
		1	**111-7899**	1	GASKET	
M	4	1	**194-6989**	2	ORIFICE	
Y	5	1	**196-7543**	1	VALVE GP-SOLENOID	704
	6	1	**359-5080**	1	BLOCK-MANIFOLD	
	7	1	*359-5087*	4	ADAPTER AS	
					(EACH INCLUDES)	
		1	**3K-0360**	1	SEAL-O-RING	
		1	**6V-8397**	1	SEAL-O-RING	
		1	**359-5079**	1	ADAPTER	
I	8	1	**435-2835**	1	HOSE AS	
I	9	1	**435-2836**	1	HOSE AS	
I	10	1	**435-2837**	1	HOSE AS	
	11	1	**117-1805**	2	CLAMP-SINGLE	
	12	1	*148-8318*	1	CONNECTOR AS	
		1	**3K-0360**	1	SEAL-O-RING	
		1	**6V-8397**	1	SEAL-O-RING	
		1	**6V-8634**	1	CONNECTOR	
	13	1	*148-8336*	2	CONNECTOR AS	
					(EACH INCLUDES)	
		1	**3J-1907**	1	SEAL-O-RING	
		1	**6V-8397**	1	SEAL-O-RING	
		1	**6V-8636**	1	CONNECTOR	
	14	1	*148-8374*	1	ELBOW AS	
		1	**3K-0360**	1	SEAL-O-RING	
		1	**6V-8397**	1	SEAL-O-RING	
		1	**6V-8723**	1	ELBOW	
	15	1	*148-8378*	3	ELBOW AS	
					(EACH INCLUDES)	
		1	**3J-1907**	1	SEAL-O-RING	
		1	**6V-8397**	1	SEAL-O-RING	
		1	**6V-8724**	1	ELBOW	
	16	1	*148-8395*	1	PLUG AS	
		1	**3K-0360**	1	SEAL-O-RING	
		1	**9S-8005**	1	PLUG (3/4-16-THD)	
	17	1	*164-5605*	1	CONNECTOR AS	
		1	**3K-0360**	1	SEAL-O-RING	
		1	**6V-8397**	1	SEAL-O-RING	
		1	**8T-0076**	1	CONNECTOR	
	18	1	*204-0317*	1	CONNECTOR AS	
		1	**3K-0360**	1	SEAL-O-RING	
		1	**6V-8397**	1	SEAL-O-RING	
		1	**092-3635**	1	CONNECTOR	
	19	1	**206-2423**	2	SADDLE-MOUNTING	

479-4267 **LINES GP-STABILIZER (**contd.**)** **i06251643**

NOTE	REF NO	GRAPHIC REF	PART NUMBER	QTY	PART NAME 1 2 3 4 5 6 (PRODUCT LEVEL)	SEE PAGE
M	20	1	**298-6020**	2	BOLT-SOCKET HEAD (M8X1.25X60-MM)	
M	21	1	**7X-2534**	2	BOLT (M6X1X50-MM)	
	22	1	**8U-6120**	1	CLAMP	
I	23	1	**434-4637**	2	HOSE AS	
I	24	1	**434-4887**	2	HOSE AS	

I - REFER TO HYDRAULIC INFORMATION SYSTEM
M - METRIC PART
Y - SEPARATE ILLUSTRATION

479-4267 **LINES GP-STABILIZER (**contd.**)** **i06251643**

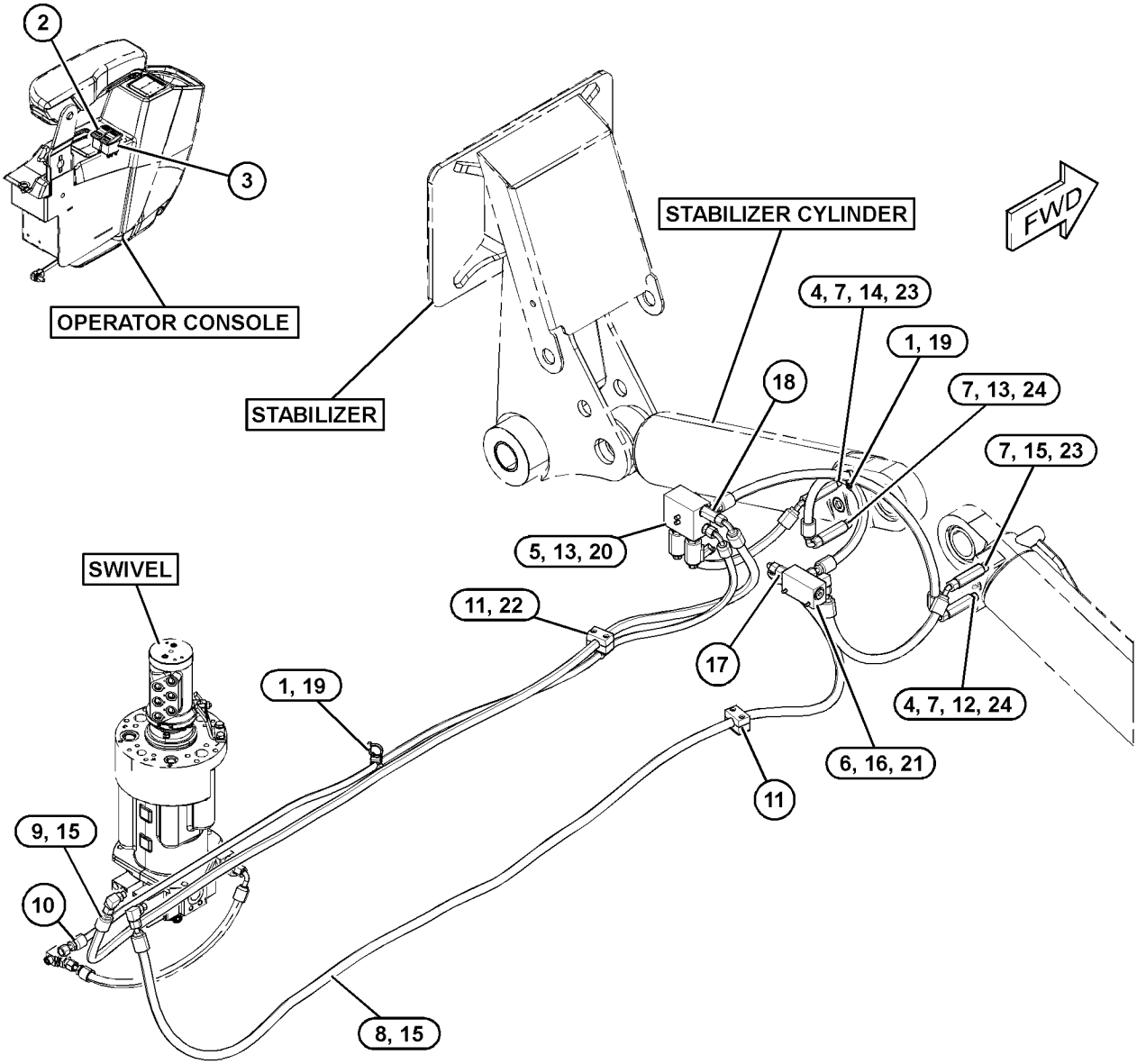

GRAPHIC #1 <END> g03871295

254-2631 LINES GP-STEERING

S/N: CH91-UP
PART OF 449-2784 HYDRAULIC AR
ALSO AN ATTACHMENT

SMCS-4304 **i06683970**

NOTE	REF NO	GRAPHIC REF	PART NUMBER	QTY	PART NAME 1 2 3 4 5 6 (PRODUCT LEVEL)	SEE PAGE
	1	1	**188-1814**	1	VALVE GP-PRIORITY (MAIN) (STEERING)	
J	2	1	**205-6215**	1	PUMP GP-METERING (HMU)	
	3	1	**133-5813**	1	BAND-MARKER (GRAY, P)	
I	4	1	**145-7118**	1	HOSE AS	
	5	1	*148-8326*	2	CONNECTOR AS	
					(EACH INCLUDES)	
		1	**3J-7354**	1	SEAL-O-RING	
		1	**6V-8397**	1	SEAL-O-RING	
		1	**6V-9872**	1	CONNECTOR	
	6	1	*148-8340*	4	CONNECTOR AS	
					(EACH INCLUDES)	
		1	**3K-0360**	1	SEAL-O-RING	
		1	**6V-8398**	1	SEAL-O-RING	
		1	**6V-8639**	1	CONNECTOR	
	7	1	*148-8364*	1	ELBOW AS	
		1	**3K-0360**	1	SEAL-O-RING	
		1	**6V-8398**	1	SEAL-O-RING	
		1	**6V-8625**	1	ELBOW	
I	8	1	**190-8553**	1	HOSE AS	
I	9	1	**190-8557**	1	HOSE AS	
I	10	1	**190-8558**	1	HOSE AS	
I	11	1	**190-8560**	1	HOSE AS	
	12	1	**4I-9521**	1	BAND-MARKER (RED, L1)	
	13	1	**4I-9522**	1	BAND-MARKER (YELLOW, L2)	
	14	1	**4I-9523**	1	BAND-MARKER (BLUE, L3)	
	15	1	**4I-9525**	1	BAND-MARKER (ORANGE, R1)	
	16	1	**4I-9527**	1	BAND-MARKER (GREEN, R3)	
	17	1	**4M-6921**	4	WASHER-SPRING	
M	19	1	**8T-4137**	4	BOLT (M10X1.5X20-MM)	
M	21	1	**107-0269**	1	BOLT-HEAD (M8X1.25X50-MM)	
M	22	1	**298-6020**	1	BOLT-SOCKET HEAD (M8X1.25X60-MM)	
					AVAILABLE REPAIR KIT(S):	
J			**201-0048**	1	KIT-SEAL (STEERING PUMP)	
					(INCLUDES O-RING SEALS, RING SEAL, VECTOR SEAL & PLUGS)	

I - REFER TO HYDRAULIC INFORMATION SYSTEM
J - KIT MARKED J SERVICES PART(S) MARKED J
M - METRIC PART

254-2631 **LINES GP-STEERING** (contd.) **i06683970**

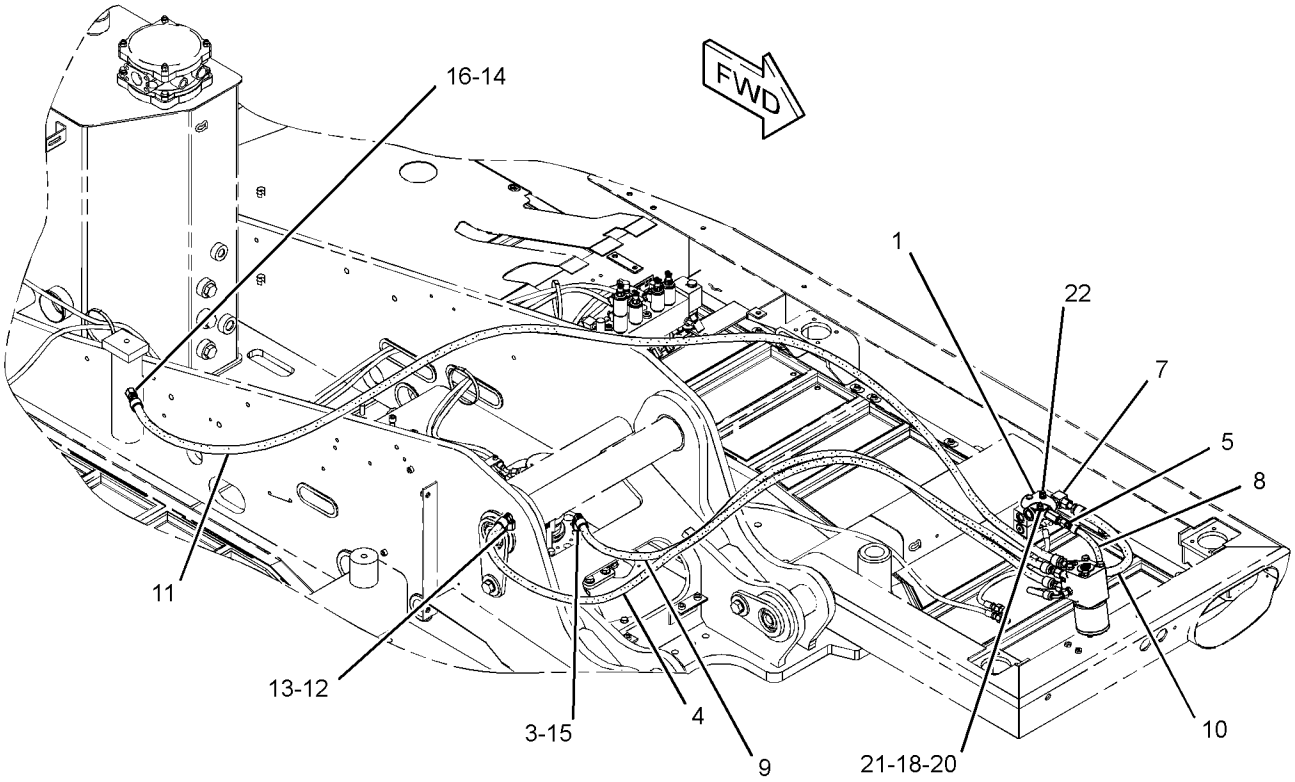

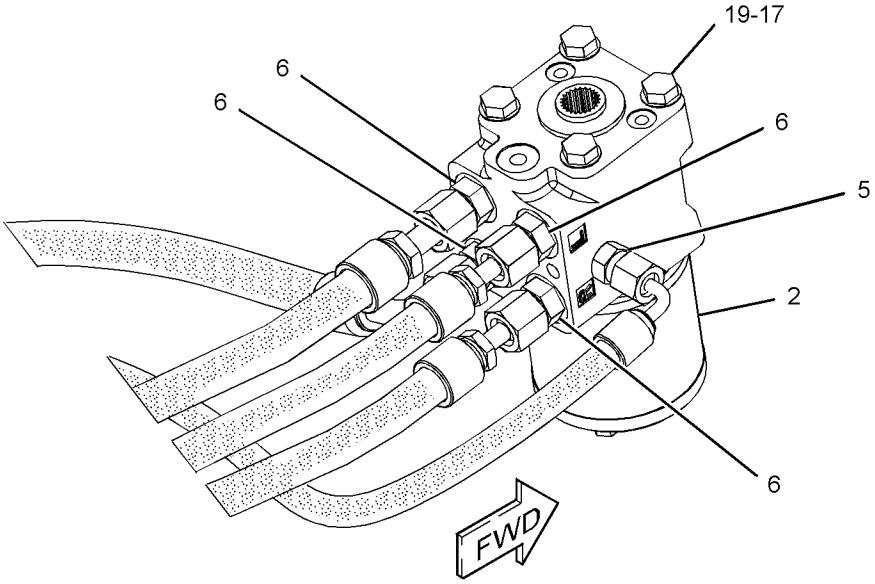

GRAPHIC #1 <END> g06074974

254-0394 LINES GP-STICK

S/N: CH91-UP
2.5-M (8.2-FT) STICK
PART OF 427-9783 STICK AR
AN ATTACHMENT

SMCS-5057, 5458 **i05927178**

NOTE	REF NO	GRAPHIC REF	PART NUMBER	QTY	PART NAME 1 2 3 4 5 6 (PRODUCT LEVEL)	SEE PAGE
	1	1	**5W-9857**	2	FLANGE-HALF	
M	2	1	**105-3478**	4	BOLT-SOCKET HEAD (M10X1.5X35-MM)	
I	3	1	**196-5380**	1	HOSE AS	
I	4	1	**196-5381**	1	HOSE AS	
	5	1	**329-2367**	1	TUBE AS	
	6	1	**330-4658**	1	TUBE AS	
	7	1	**1P-3702**	1	SEAL-RECTANGULAR	
	8	1	**4J-5267**	2	SEAL-O-RING	
	9	1	**5K-9090**	1	SEAL-O-RING	
	10	1	**8T-4121**	4	WASHER-HARD (11X21X2.5-MM THK)	
M	11	1	**8T-4196**	4	BOLT (M10X1.5X35-MM)	
M	12	1	**8T-4198**	4	BOLT (M10X1.5X100-MM)	
	13	1	**8T-9403**	2	FLANGE-HALF	

I - REFER TO HYDRAULIC INFORMATION SYSTEM
M - METRIC PART

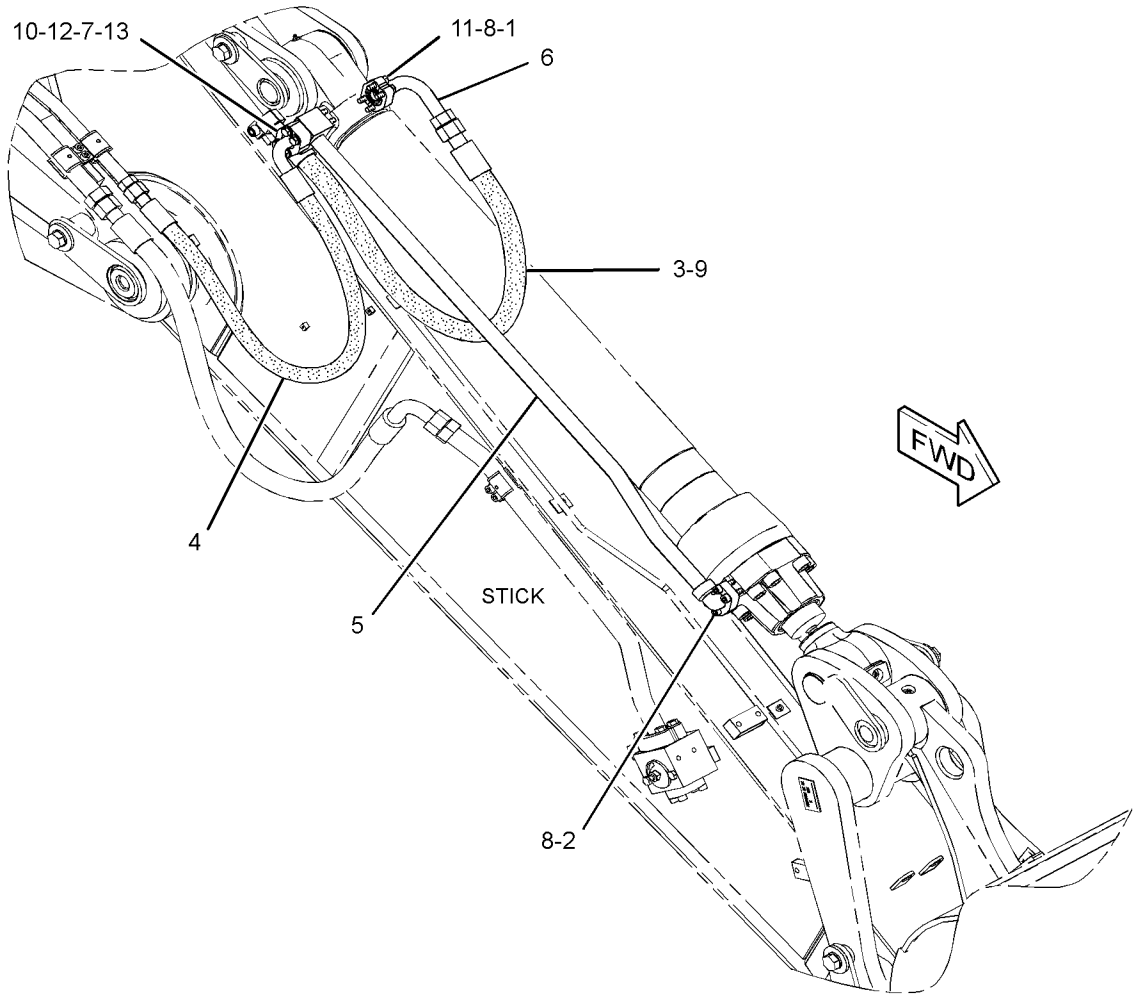

GRAPHIC #1 <END> g01513759

254-0395 LINES GP-STICK

S/N: CH91-UP
2.8-M (9.2-FT) STICK
PART OF 454-8156 STICK AR
AN ATTACHMENT

SMCS-5057, 5458 **i05927169**

NOTE	REF NO	GRAPHIC REF	PART NUMBER	QTY	PART NAME 1 2 3 4 5 6 (PRODUCT LEVEL)	SEE PAGE
	1	1	**5W-9857**	2	FLANGE-HALF	
M	2	1	**105-3478**	4	BOLT-SOCKET HEAD (M10X1.5X35-MM)	
	3	1	**329-2367**	1	TUBE AS	
I	4	1	**200-4051**	1	HOSE AS	
I	5	1	**200-4052**	1	HOSE AS	
	6	1	**330-4658**	1	TUBE AS	
	7	1	**1P-3702**	1	SEAL-RECTANGULAR	
	8	1	**4J-5267**	2	SEAL-O-RING	
	9	1	**5K-9090**	1	SEAL-O-RING	
	10	1	**8T-4121**	4	WASHER-HARD (11X21X2.5-MM THK)	
M	11	1	**8T-4196**	4	BOLT (M10X1.5X35-MM)	
M	12	1	**8T-4198**	4	BOLT (M10X1.5X100-MM)	
	13	1	**8T-9403**	2	FLANGE-HALF	

I - REFER TO HYDRAULIC INFORMATION SYSTEM
M - METRIC PART

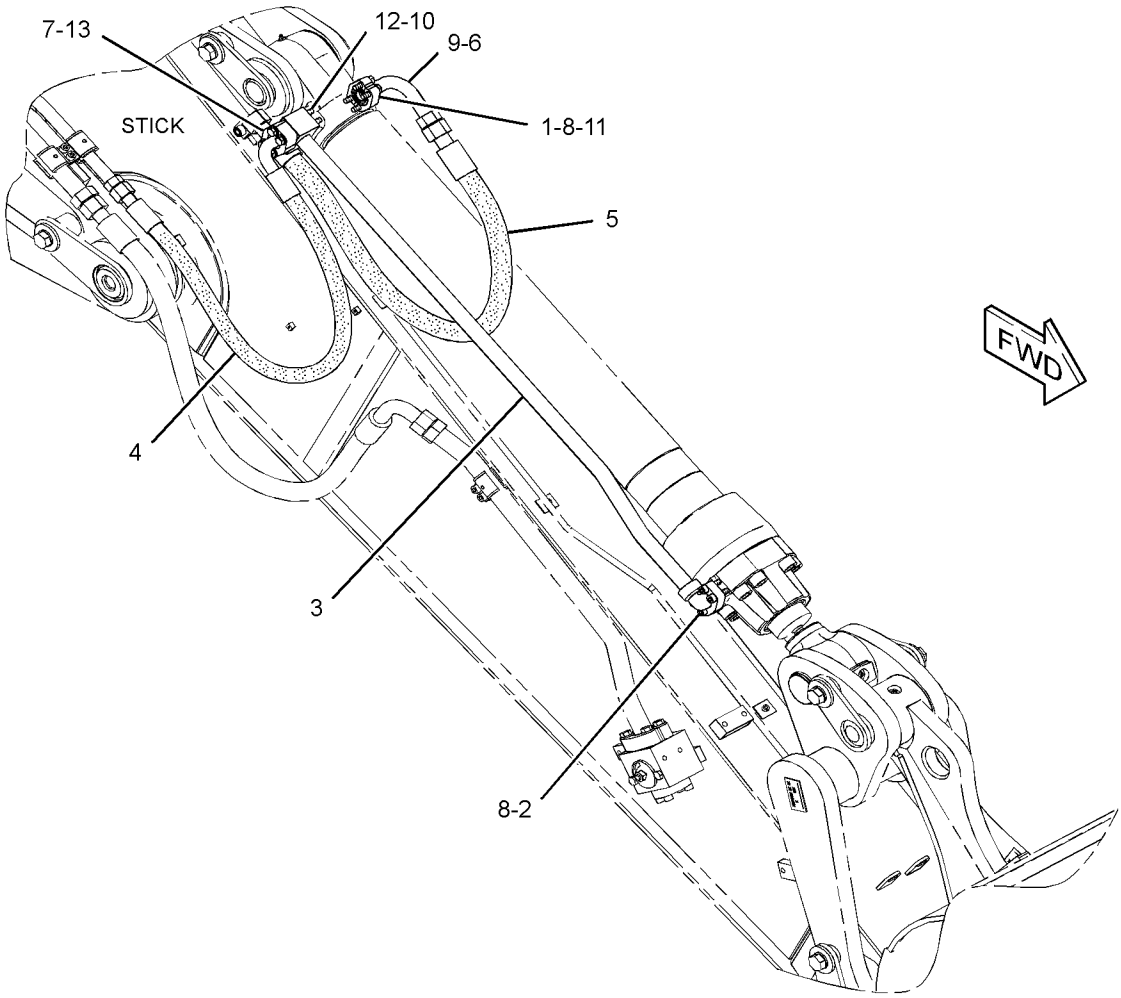

GRAPHIC #1 <END> g01513770

254-0403 LINES GP-STICK—AUX HYD, QUICK COUPLER

S/N: CH91-UP
2.5-M (8.2-FT)
AN ATTACHMENT

SMCS-5057, 5458 **i05916041**

NOTE	REF NO	GRAPHIC REF	PART NUMBER	QTY	PART NAME 1 2 3 4 5 6 (PRODUCT LEVEL)	SEE PAGE
	1	1	**153-6199**	2	CLAMP-SINGLE	
	2	1	**179-3341**	1	CLAMP-DOUBLE	
	3	1	**185-6820**	1	TUBE AS	
	4	1	**195-7685**	4	ADAPTER	
	5	1	**199-2455**	1	TUBE AS	
	6	1	**199-2457**	4	CLAMP-DOUBLE (DOUBLE)	
	7	1	**203-2917**	2	BLOCK	
	8	1	*148-8377*	2	ELBOW AS	
					(EACH INCLUDES)	
		1	**6V-8397**	2	SEAL-O-RING	
		1	**6V-8980**	1	ELBOW	
	9	1	*148-8458*	2	UNION AS	
					(EACH INCLUDES)	
		1	**6V-8397**	2	SEAL-O-RING	
		1	**6V-9807**	1	UNION	
	10	1	**6V-9168**	2	NUT (11/16-16-THD)	
M	11	1	**7X-2535**	2	BOLT (M6X1X60-MM)	
I	12	1	**196-5388**	2	HOSE AS	
	13	1	**6V-9829**	2	CAP (ORFS)	

I - REFER TO HYDRAULIC INFORMATION SYSTEM
M - METRIC PART

254-0403 **LINES GP-STICK (**contd.**)** **i05916041**

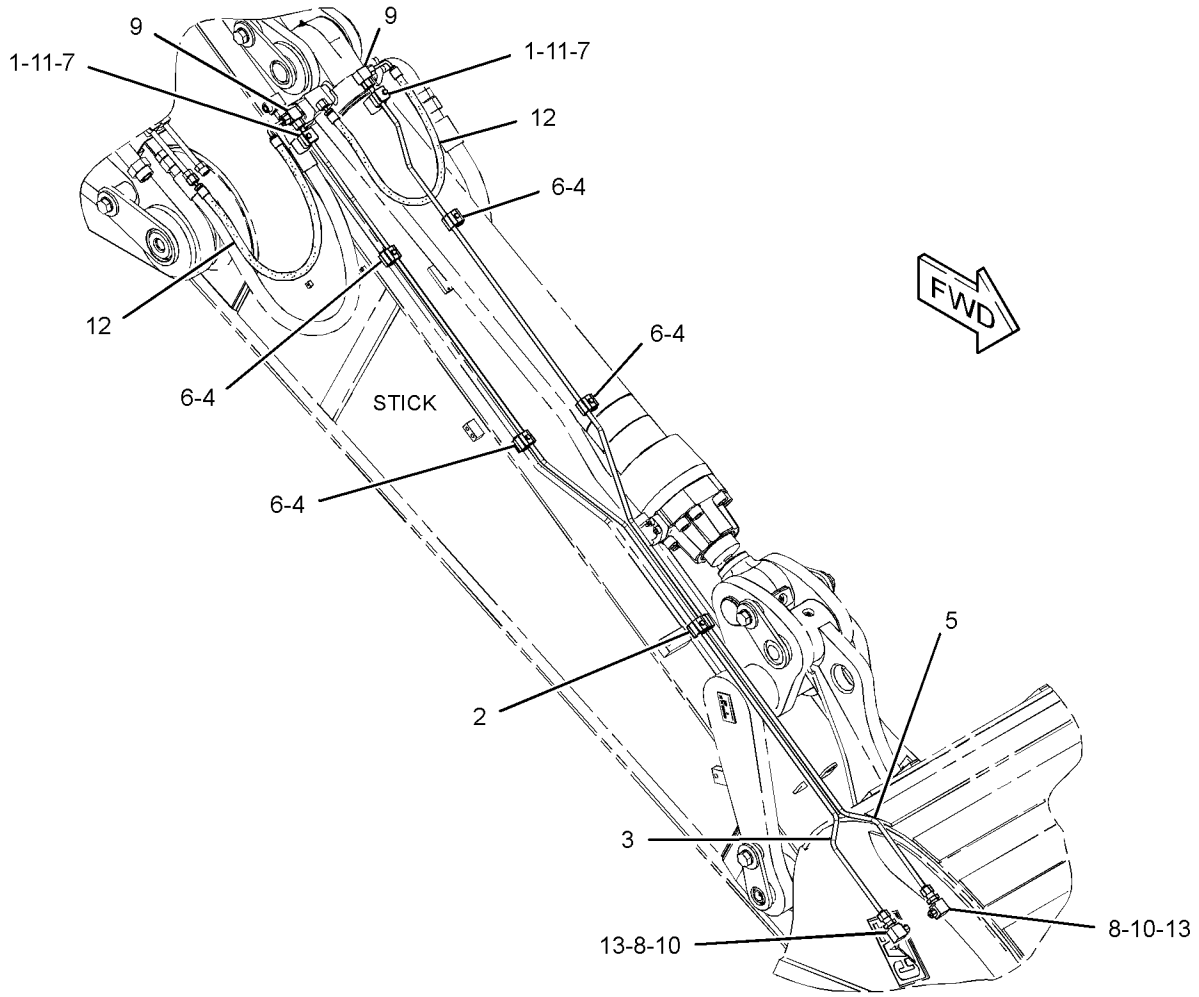

GRAPHIC #1 <END> g01511256

254-0404 LINES GP-STICK—AUX HYD, QUICK COUPLER

S/N: CH91-UP
2.8-M (9.2-FT)
AN ATTACHMENT

SMCS-5057, 5458 **i05916043**

NOTE	REF NO	GRAPHIC REF	PART NUMBER	QTY	PART NAME 1 2 3 4 5 6 (PRODUCT LEVEL)	SEE PAGE
	1	1	**153-6199**	4	CLAMP-SINGLE	
	2	1	**179-3341**	1	CLAMP-DOUBLE	
	3	1	**195-7685**	2	ADAPTER	
	4	1	**199-2457**	2	CLAMP-DOUBLE (DOUBLE)	
	5	1	**199-2458**	1	TUBE AS	
	6	1	**199-2459**	1	TUBE AS	
	7	1	**203-2917**	4	BLOCK	
	8	1	*148-8377*	2	ELBOW AS	
					(EACH INCLUDES)	
		1	**6V-8397**	2	SEAL-O-RING	
		1	**6V-8980**	1	ELBOW	
	9	1	*148-8458*	2	UNION AS	
					(EACH INCLUDES)	
		1	**6V-8397**	2	SEAL-O-RING	
		1	**6V-9807**	1	UNION	
	10	1	**6V-9168**	2	NUT (11/16-16-THD)	
M	11	1	**7X-2535**	4	BOLT (M6X1X60-MM)	
I	12	1	**196-5388**	2	HOSE AS	
	13	1	**6V-9829**	2	CAP (ORFS)	

I - REFER TO HYDRAULIC INFORMATION SYSTEM
M - METRIC PART

254-0404 **LINES GP-STICK (**contd.**)** **i05916043**

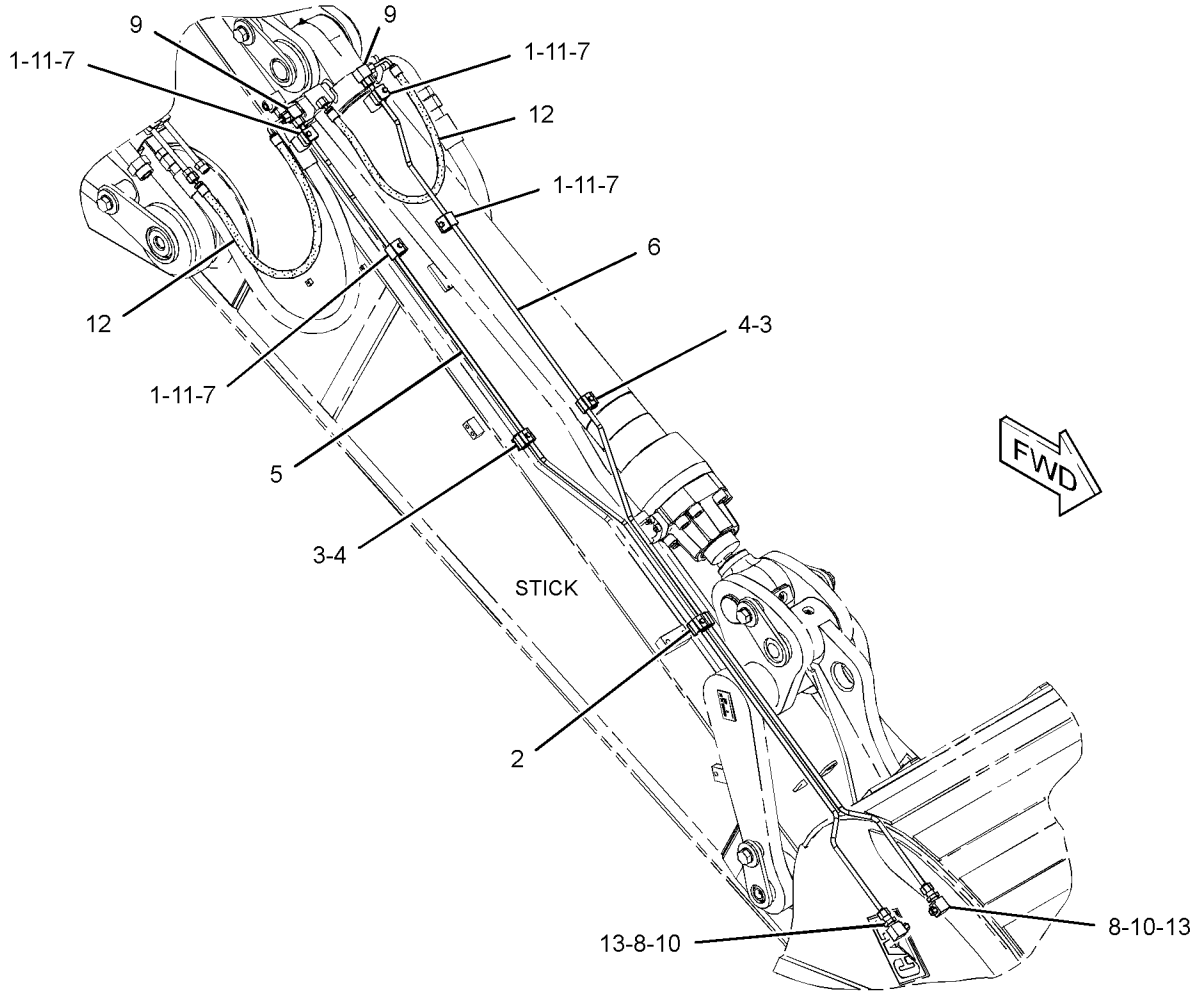

GRAPHIC #1 <END> g01431044

417-8472 LINES GP-STICK—DIVERTER VALVE

S/N: CH91-UP
2.5-M (8.2 FT)
PART OF 426-2549 STICK AR
AN ATTACHMENT

SMCS-5057, 5458 **i05922445**

NOTE	REF NO	GRAPHIC REF	PART NUMBER	QTY	PART NAME 1 2 3 4 5 6 (PRODUCT LEVEL)	SEE PAGE
	1	1	**5W-9857**	2	FLANGE-HALF	
	2	1	**151-8866**	2	ELBOW	
I	3	1	**196-5380**	1	HOSE AS	
I	4	1	**196-5381**	1	HOSE AS	
I	5	1	**196-5382**	1	HOSE AS	
I	6	1	**196-5383**	1	HOSE AS	
I	7	1	**196-5384**	1	HOSE AS	
Y	8	1	**290-9589**	1	VALVE GP-DIVERTER (STICK CYLINDER, ROD END)	669
Y	9	1	**290-9591**	1	VALVE GP-DIVERTER (STICK CYLINDER, HEAD END)	670
	10	1	**330-4657**	1	TUBE AS	
M	11	1	**101-7398**	8	BOLT-SOCKET HEAD (M10X1.5X40-MM)	
	12	1	**1P-3702**	5	SEAL-RECTANGULAR	
	13	1	**4J-5267**	4	SEAL-O-RING	
	14	1	**5K-9090**	1	SEAL-O-RING	
	15	1	**6V-9746**	2	SEAL-O-RING	
M	16	1	**7X-2543**	4	BOLT (M10X1.5X120-MM)	
	17	1	**8T-4121**	20	WASHER-HARD (11X21X2.5-MM THK)	
M	18	1	**8T-4182**	16	BOLT (M10X1.5X45-MM)	
M	19	1	**8T-4198**	4	BOLT (M10X1.5X100-MM)	
	20	1	**8T-9403**	10	FLANGE-HALF	

I - REFER TO HYDRAULIC INFORMATION SYSTEM
M - METRIC PART
Y - SEPARATE ILLUSTRATION

417-8472 **LINES GP-STICK (**contd.**)** **i05922445**

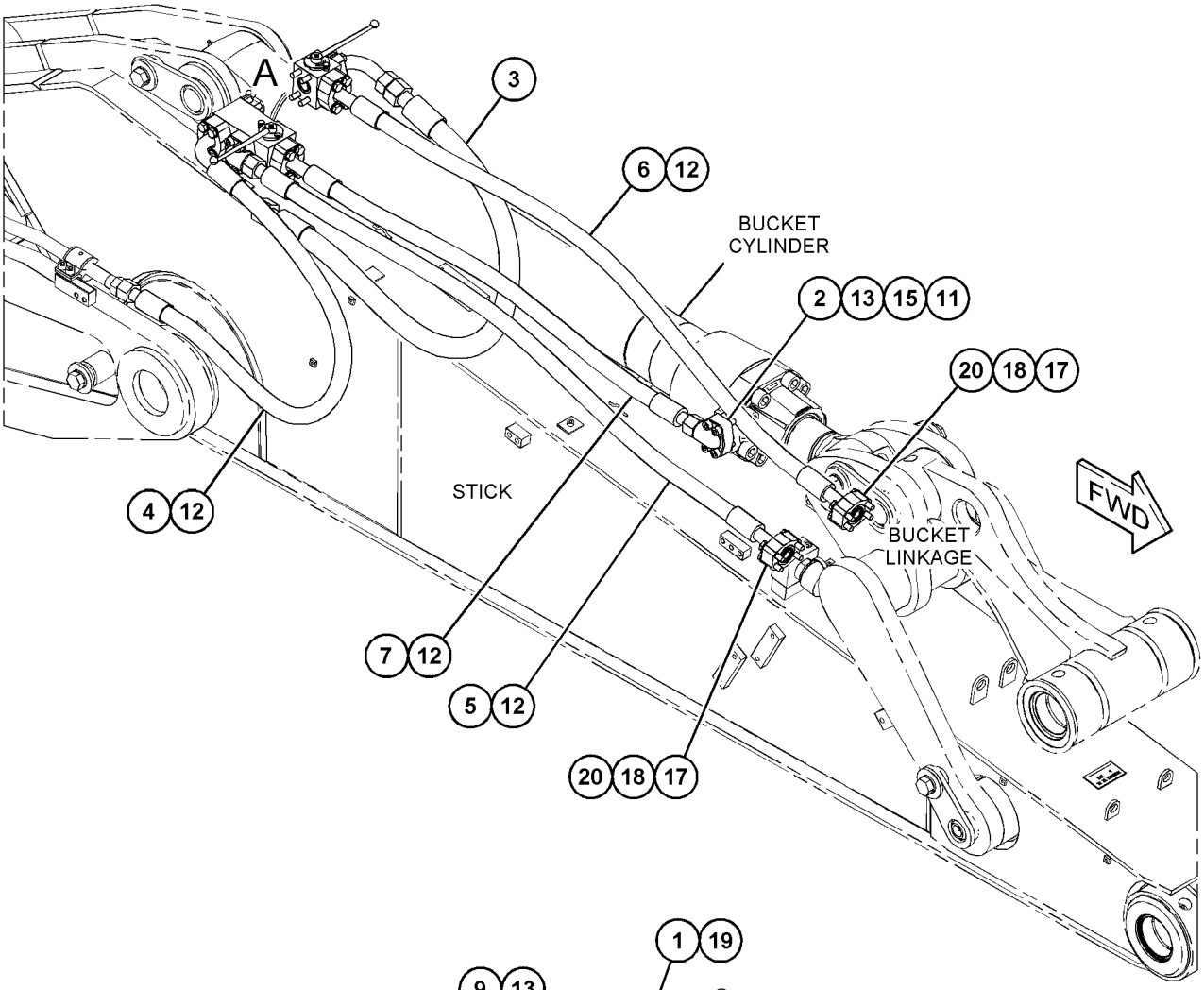

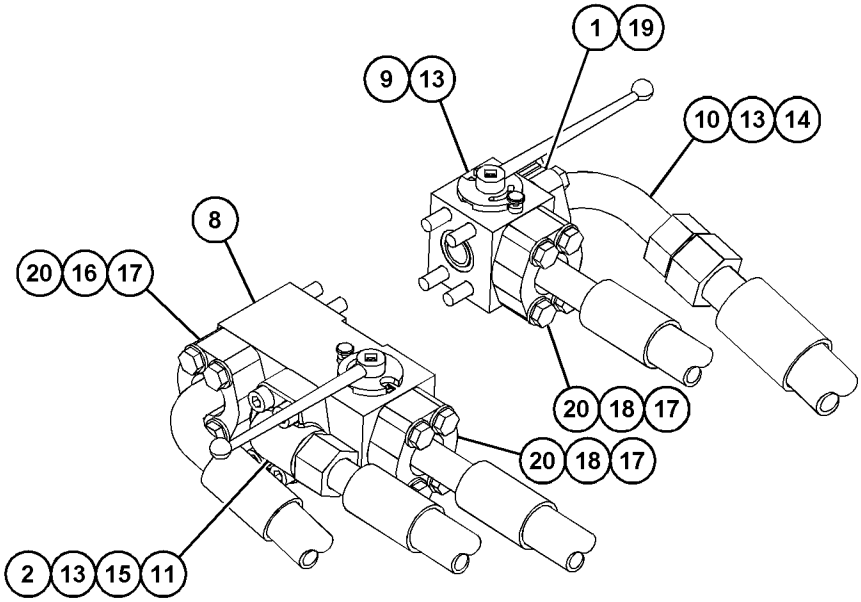

VIEW OF AREA A

GRAPHIC #1 <END> g03583059

417-8475 LINES GP-STICK—DIVERTER VALVE

S/N: CH91-UP
2.8-M (9.2-FT)
PART OF 426-0345 STICK AR
AN ATTACHMENT

SMCS-5057, 5458 **i05922330**

NOTE	REF NO	GRAPHIC REF	PART NUMBER	QTY	PART NAME 1 2 3 4 5 6 (PRODUCT LEVEL)	SEE PAGE
	1	1	**5W-9857**	2	FLANGE-HALF	
	2	1	**151-8866**	2	ELBOW	
I	3	1	**196-5382**	1	HOSE AS	
I	4	1	**196-5383**	1	HOSE AS	
I	5	1	**196-5384**	1	HOSE AS	
I	6	1	**200-4051**	1	HOSE AS	
I	7	1	**200-4052**	1	HOSE AS	
Y	8	1	**290-9589**	1	VALVE GP-DIVERTER (STICK CYLINDER, ROD END)	669
Y	9	1	**290-9591**	1	VALVE GP-DIVERTER (STICK CYLINDER, HEAD END)	670
	10	1	**330-4657**	1	TUBE AS	
M	11	1	**101-7398**	8	BOLT-SOCKET HEAD (M10X1.5X40-MM)	
	12	1	**1P-3702**	5	SEAL-RECTANGULAR	
	13	1	**4J-5267**	4	SEAL-O-RING	
	14	1	**5K-9090**	1	SEAL-O-RING	
	15	1	**6V-9746**	2	SEAL-O-RING	
M	16	1	**7X-2543**	4	BOLT (M10X1.5X120-MM)	
	17	1	**8T-4121**	20	WASHER-HARD (11X21X2.5-MM THK)	
M	18	1	**8T-4182**	16	BOLT (M10X1.5X45-MM)	
M	19	1	**8T-4198**	4	BOLT (M10X1.5X100-MM)	
	20	1	**8T-9403**	10	FLANGE-HALF	

I - REFER TO HYDRAULIC INFORMATION SYSTEM
M - METRIC PART
Y - SEPARATE ILLUSTRATION

417-8475 **LINES GP-STICK (**contd.**)** **i05922330**

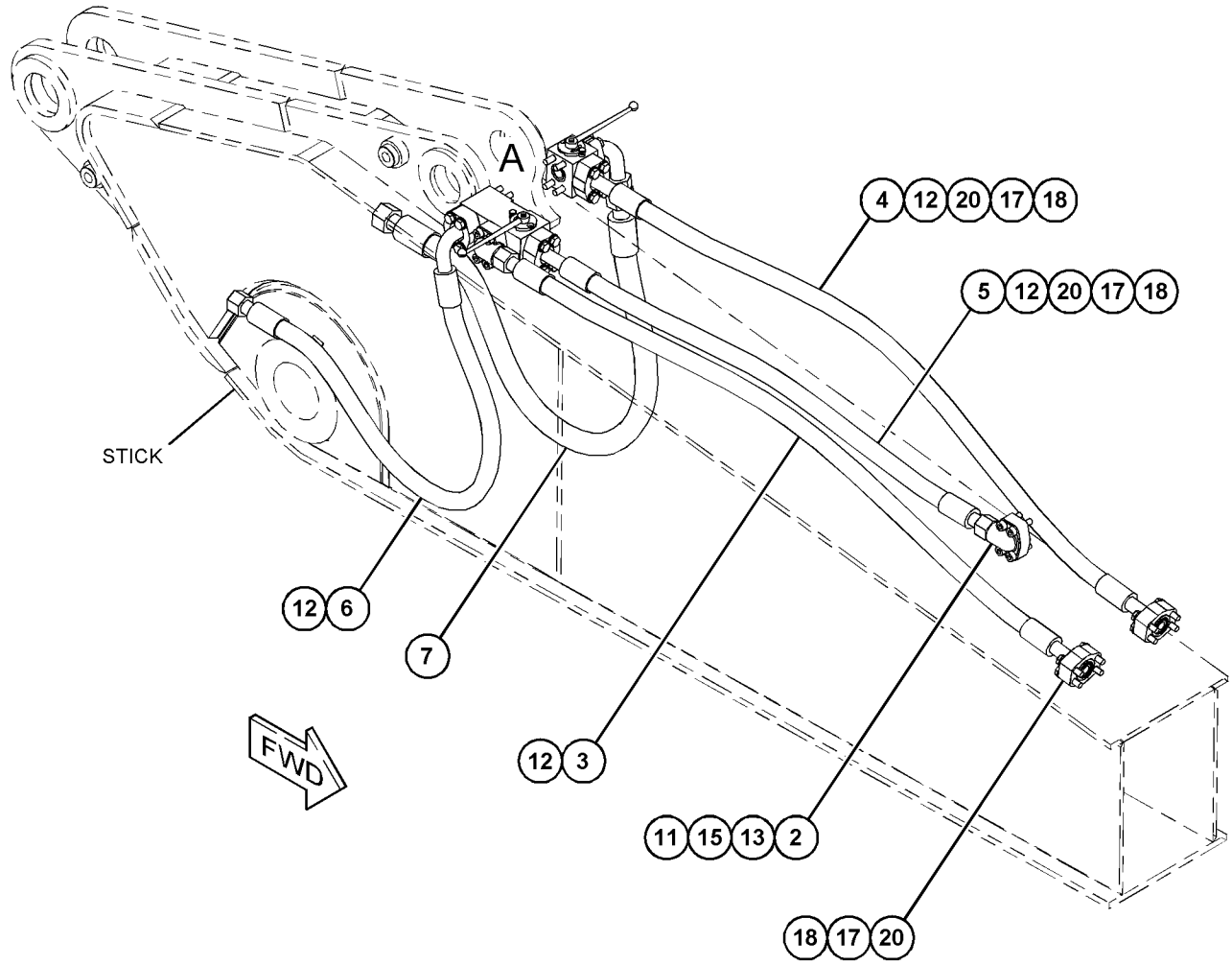

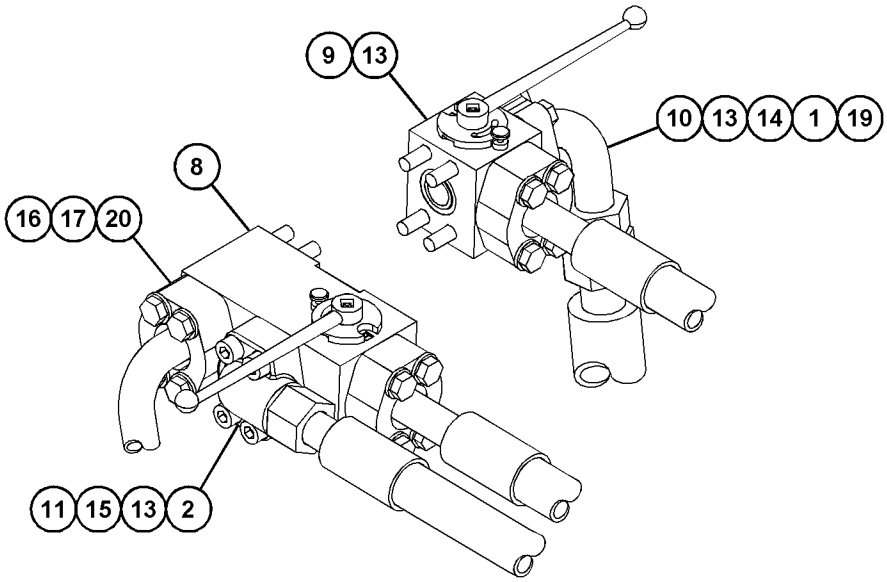

VIEW OF AREA A

GRAPHIC #1 <END> g03584198

417-9197 LINES GP-STICK—AUX HYD, MEDIUM PRESSURE

S/N: CH91-UP
2.5-M (8.2 FT)
AN ATTACHMENT

SMCS-5057, 5458 **i05921100**

NOTE	REF NO	GRAPHIC REF	PART NUMBER	QTY	PART NAME 1 2 3 4 5 6 (PRODUCT LEVEL)	SEE PAGE
	1	1	**114-9324**	6	CLAMP-SINGLE	
	2	1	**117-7511**	2	PLATE	
	3	1	**192-9074**	2	TUBE AS	
	4	1	**192-9075**	2	TUBE AS	
	5	1	**192-9076**	2	TUBE AS	
M	6	1	**105-3488**	4	BOLT-SOCKET HEAD (M10X1.5X16-MM)	
	7	1	*148-8454*	2	TEE AS	
					(EACH INCLUDES)	
		1	**6V-8398**	3	SEAL-O-RING	
		1	**6V-8789**	1	TEE	
	8	1	*153-6257*	2	UNION AS	
					(EACH INCLUDES)	
		1	**6V-8398**	2	SEAL-O-RING	
		1	**6V-9808**	1	UNION	
	9	1	**6V-9169**	4	NUT (13/16-16-THD)	
B	10	1	**8T-4123**	6	WASHER (22X35X3.5-MM THK)	
I	11	1	**204-0682**	2	HOSE AS	

B - USE AS REQUIRED
I - REFER TO HYDRAULIC INFORMATION SYSTEM
M - METRIC PART

417-9197 **LINES GP-STICK (**contd.**)** **i05921100**

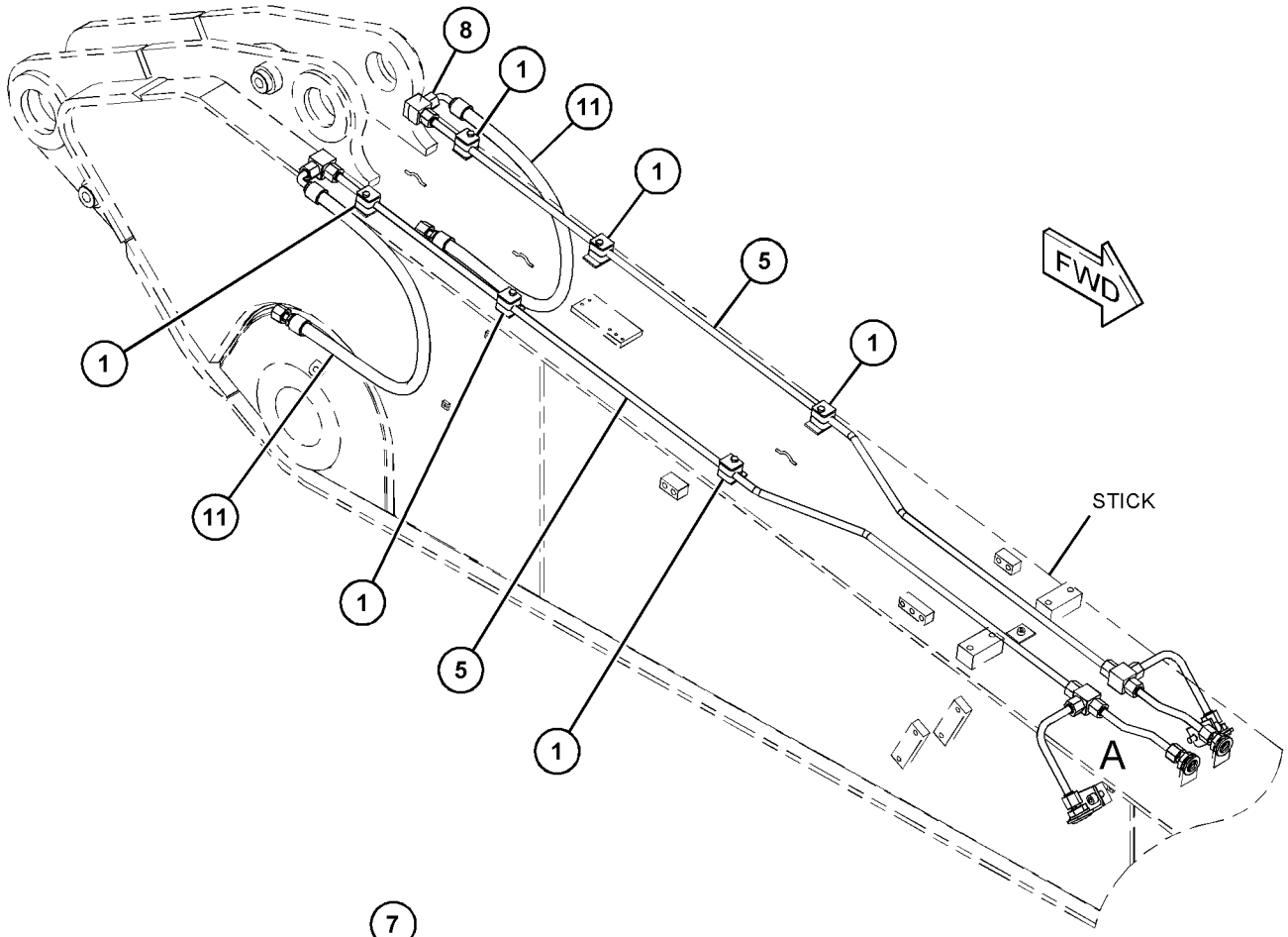

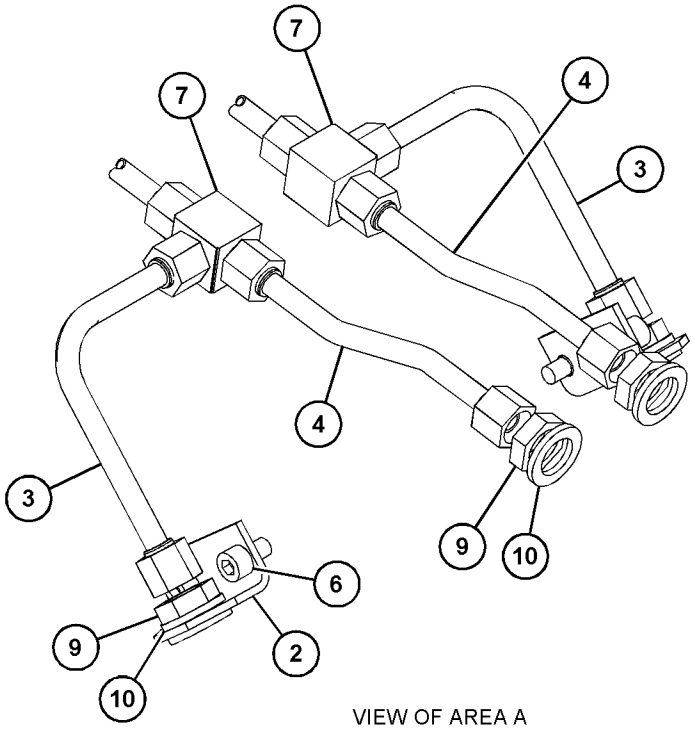

VIEW OF AREA A

GRAPHIC #1 <END> g03578454

417-9199 LINES GP-STICK—AUXILIARY HYDRAULIC

S/N: CH91-UP

2.5-M (8.2 FT). MEDIUM PRESSURE FUNCTION. QUICK COUPLER AN ATTACHMENT

SMCS-5057, 5458 **i05921102**

NOTE	REF NO	GRAPHIC REF	PART NUMBER	QTY	PART NAME 1 2 3 4 5 6 (PRODUCT LEVEL)	SEE PAGE
	1	1	**114-9324**	2	CLAMP-SINGLE	
	2	1	**117-7511**	2	PLATE	
	3	1	**153-6199**	2	CLAMP-SINGLE	
	4	1	**179-3341**	1	CLAMP-DOUBLE	
	5	1	**185-6820**	1	TUBE AS	
	6	1	**192-9074**	2	TUBE AS	
	7	1	**192-9075**	2	TUBE AS	
	8	1	**192-9076**	2	TUBE AS	
	9	1	**199-2455**	1	TUBE AS	
	10	1	**199-2457**	4	CLAMP-DOUBLE (DOUBLE)	
M	11	1	**105-3488**	4	BOLT-SOCKET HEAD (M10X1.5X16-MM)	
	12	1	*148-8377*	2	ELBOW AS	
					(EACH INCLUDES)	
		1	**6V-8397**	2	SEAL-O-RING	
		1	**6V-8980**	1	ELBOW	
	13	1	*148-8454*	2	TEE AS	
					(EACH INCLUDES)	
		1	**6V-8398**	3	SEAL-O-RING	
		1	**6V-8789**	1	TEE	
	14	1	*148-8458*	2	UNION AS	
					(EACH INCLUDES)	
		1	**6V-8397**	2	SEAL-O-RING	
		1	**6V-9807**	1	UNION	
	15	1	*153-6257*	2	UNION AS	
					(EACH INCLUDES)	
		1	**6V-8398**	2	SEAL-O-RING	
		1	**6V-9808**	1	UNION	
	16	1	**6V-9168**	2	NUT (11/16-16-THD)	
	17	1	**6V-9169**	4	NUT (13/16-16-THD)	
	18	1	**6V-9829**	2	CAP (ORFS)	
M	19	1	**7X-2535**	2	BOLT (M6X1X60-MM)	
B	20	1	**8T-4123**	6	WASHER (22X35X3.5-MM THK)	
I	21	1	**196-5388**	2	HOSE AS	
I	22	1	**204-0682**	2	HOSE AS	

B - USE AS REQUIRED
I - REFER TO HYDRAULIC INFORMATION SYSTEM
M - METRIC PART

417-9199 **LINES GP-STICK (**contd.**)** **i05921102**

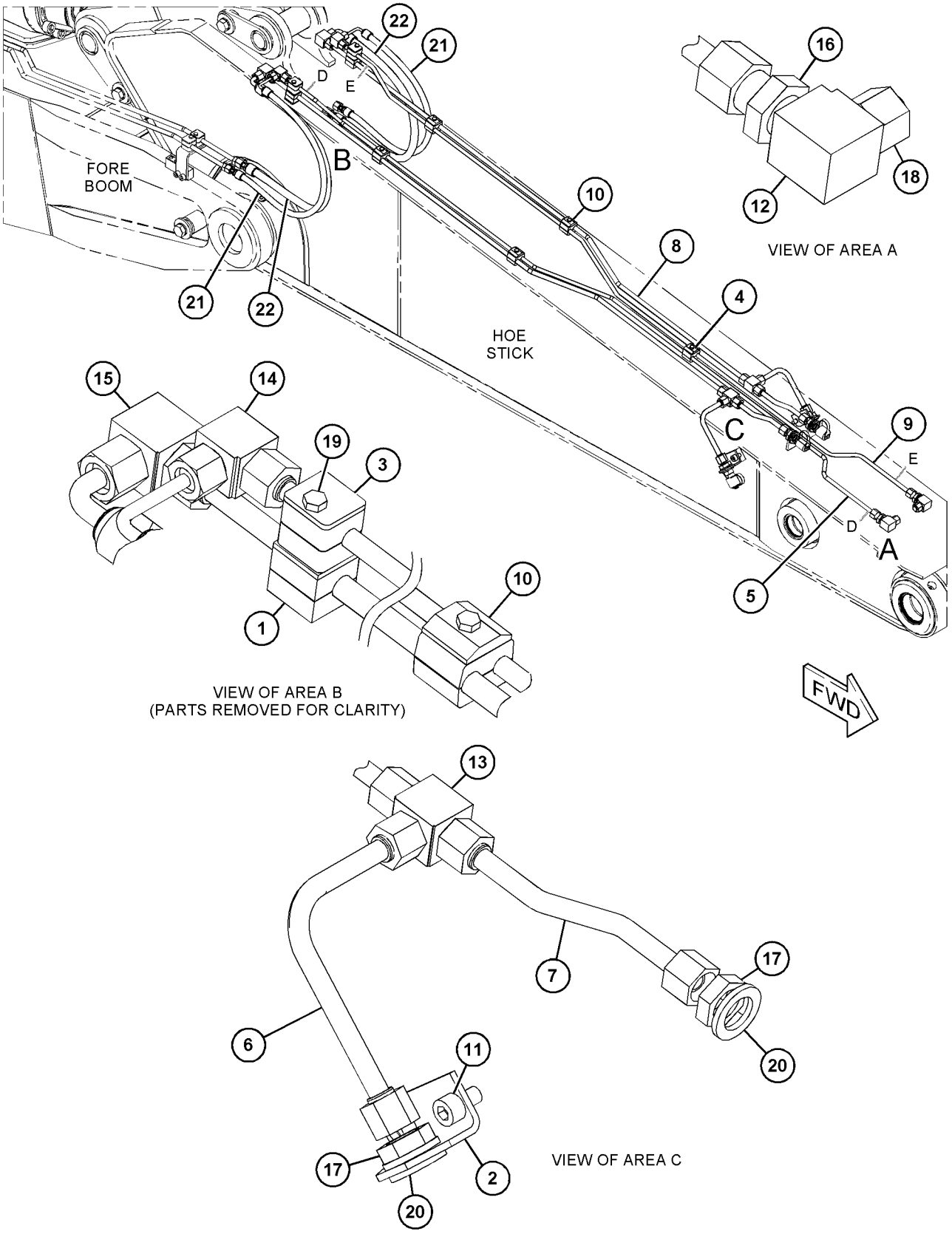

GRAPHIC #1 <END> g03573783

417-9200 LINES GP-STICK—AUXILIARY HYD, MEDIUM PRESSURE

S/N: CH91-UP

AN ATTACHMENT

SMCS-5057, 5458 **i05921105**

NOTE	REF NO	GRAPHIC REF	PART NUMBER	QTY	PART NAME 1 2 3 4 5 6 (PRODUCT LEVEL)	SEE PAGE
	1	1	**114-9324**	6	CLAMP-SINGLE	
	2	1	**117-7511**	2	PLATE	
	3	1	**192-9074**	2	TUBE AS	
	4	1	**192-9075**	2	TUBE AS	
	5	1	**195-0168**	1	TUBE AS	
	6	1	**195-0176**	1	TUBE AS	
M	7	1	**105-3488**	4	BOLT-SOCKET HEAD (M10X1.5X16-MM)	
	8	1	*148-8454*	2	TEE AS	
					(EACH INCLUDES)	
		1	**6V-8398**	3	SEAL-O-RING	
		1	**6V-8789**	1	TEE	
	9	1	*153-6257*	2	UNION AS	
					(EACH INCLUDES)	
		1	**6V-8398**	2	SEAL-O-RING	
		1	**6V-9808**	1	UNION	
	10	1	**6V-9169**	4	NUT (13/16-16-THD)	
B	11	1	**8T-4123**	8	WASHER (22X35X3.5-MM THK)	
I	12	1	**204-0682**	2	HOSE AS	

B - USE AS REQUIRED
I - REFER TO HYDRAULIC INFORMATION SYSTEM
M - METRIC PART

417-9200 **LINES GP-STICK (**contd.**)** **i05921105**

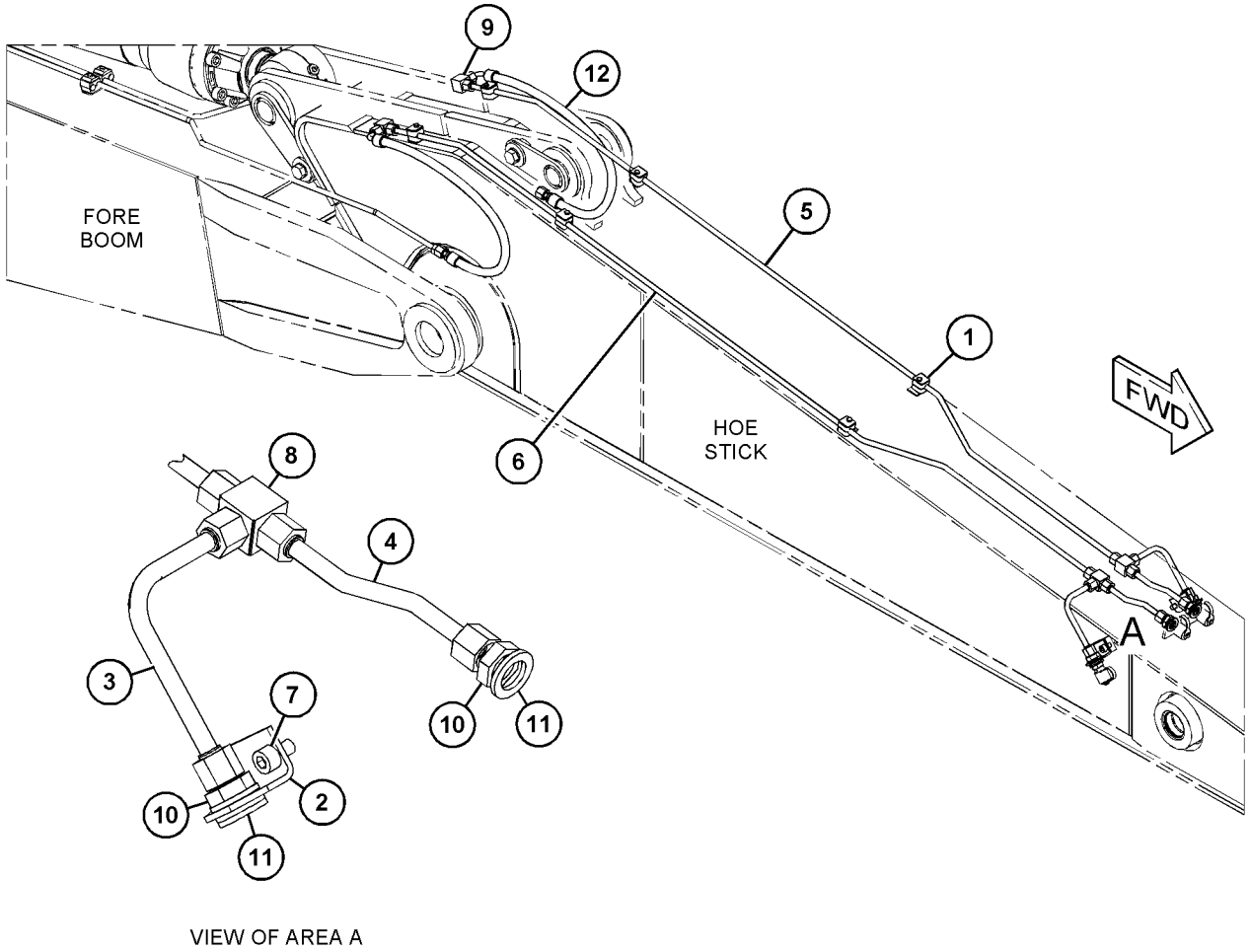

GRAPHIC #1 <END> g03573918

417-9209 LINES GP-STICK—AUXILIARY HYDRAULIC

S/N: CH91-UP

2.8-M (9.2 FT). MEDIUM PRESSURE FUNCTION. QUICK COUPLER AN ATTACHMENT

SMCS-5057, 5458 **i05921108**

NOTE	REF NO	GRAPHIC REF	PART NUMBER	QTY	PART NAME 1 2 3 4 5 6 (PRODUCT LEVEL)	SEE PAGE
	1	1	**114-9324**	4	CLAMP-SINGLE	
	2	1	**117-7511**	2	PLATE	
	3	1	**153-6199**	4	CLAMP-SINGLE	
	4	1	**179-3341**	1	CLAMP-DOUBLE	
	5	1	**192-9074**	2	TUBE AS	
	6	1	**192-9075**	2	TUBE AS	
	7	1	**195-0168**	1	TUBE AS	
	8	1	**195-0176**	1	TUBE AS	
	9	1	**199-2457**	2	CLAMP-DOUBLE (DOUBLE)	
	10	1	**199-2458**	1	TUBE AS	
	11	1	**199-2459**	1	TUBE AS	
M	12	1	**105-3488**	4	BOLT-SOCKET HEAD (M10X1.5X16-MM)	
	13	1	*148-8377*	2	ELBOW AS	
					(EACH INCLUDES)	
		1	**6V-8397**	2	SEAL-O-RING	
		1	**6V-8980**	1	ELBOW	
	14	1	*148-8454*	2	TEE AS	
					(EACH INCLUDES)	
		1	**6V-8398**	3	SEAL-O-RING	
		1	**6V-8789**	1	TEE	
	15	1	*148-8458*	2	UNION AS	
					(EACH INCLUDES)	
		1	**6V-8397**	2	SEAL-O-RING	
		1	**6V-9807**	1	UNION	
	16	1	*153-6257*	2	UNION AS	
					(EACH INCLUDES)	
		1	**6V-8398**	2	SEAL-O-RING	
		1	**6V-9808**	1	UNION	
	17	1	**6V-9168**	2	NUT (11/16-16-THD)	
	18	1	**6V-9169**	4	NUT (13/16-16-THD)	
	19	1	**6V-9829**	2	CAP (ORFS)	
M	20	1	**7X-2535**	4	BOLT (M6X1X60-MM)	
	21	1	**8T-4123**	8	WASHER (22X35X3.5-MM THK)	
I	22	1	**196-5388**	2	HOSE AS	
I	23	1	**204-0682**	2	HOSE AS	

I - REFER TO HYDRAULIC INFORMATION SYSTEM
M - METRIC PART

417-9209 **LINES GP-STICK (**contd.**)** **i05921108**

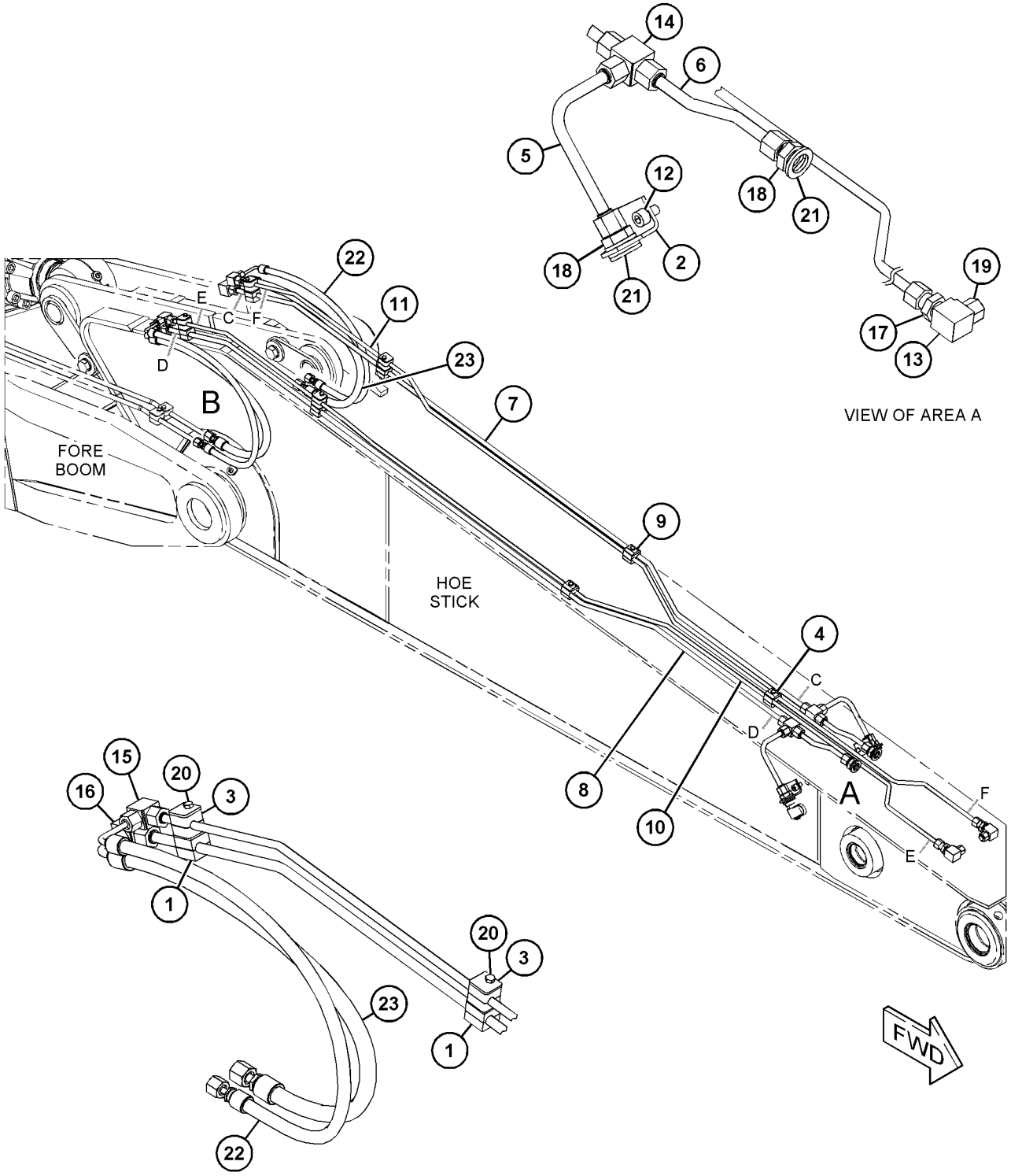

VIEW OF AREA B
(PARTS REMOVED FOR CLARITY)

GRAPHIC #1 <END> g03574057

418-8767 LINES GP-STICK—AUXILIARY HYDRAULIC

S/N: CH91-UP
2.5-M (8.2-FT)
AN ATTACHMENT

SMCS-5057, 5458 **i05921163**

NOTE	REF NO	GRAPHIC REF	PART NUMBER	QTY	PART NAME 1 2 3 4 5 6 (PRODUCT LEVEL)	SEE PAGE
	1	1	**8U-0284**	2	FLANGE-HALF	
	2	1	**127-4996**	2	FLANGE-HALF	
	3	1	*263-5618*	1	CLAMP AS (SINGLE)	
		1	**263-5132**	1	CLAMP	
		1	**263-5133**	1	GROMMET	
	4	1	*263-5619*	1	CLAMP AS (SINGLE)	
		1	**263-5132**	1	CLAMP	
		1	**263-5134**	1	GROMMET	
	5	1	**329-2385**	1	TUBE AS	
	6	1	**332-1393**	1	TUBE AS	
Y	7	1	**389-2407**	2	VALVE GP-MANUAL (AUXILIARY, SHUTOFF, 2-WAY FLOW)	680
M	8	1	**101-7404**	4	BOLT-SOCKET HEAD (M10X1.5X30-MM)	
	9	1	**4J-0520**	1	SEAL-O-RING	
	10	1	**4J-0522**	1	SEAL-O-RING	
	11	1	**5K-9090**	2	SEAL-O-RING	
M	12	1	**8T-4183**	4	BOLT (M12X1.75X40-MM)	
M	13	1	**8T-4184**	4	BOLT (M12X1.75X45-MM)	
M	14	1	**8T-4198**	4	BOLT (M10X1.5X100-MM)	
	15	1	**8T-4223**	4	WASHER-HARD (13.5X25.5X3-MM THK)	
I	16	1	**196-5390**	2	HOSE AS	

I - REFER TO HYDRAULIC INFORMATION SYSTEM
M - METRIC PART
Y - SEPARATE ILLUSTRATION

418-8767 **LINES GP-STICK (**contd.**)** **i05921163**

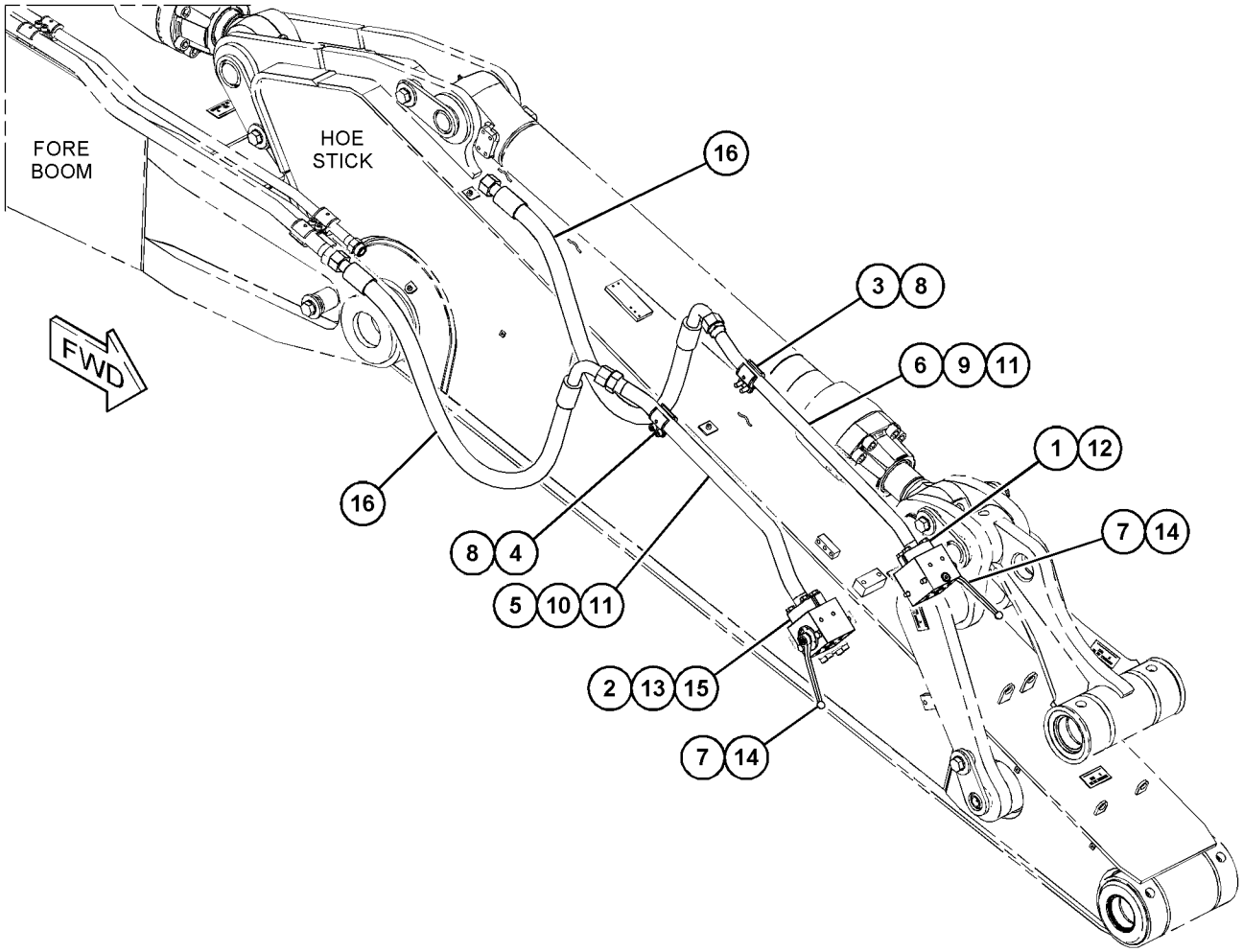

GRAPHIC #1 <END> g03580327

418-8768 LINES GP-STICK—AUXILIARY HYDRAULIC

S/N: CH91-UP
2.8-M (9.2 FT)
PART OF 453-8185, 473-2841, 517-3262 DISTRIBUTION AR
AN ATTACHMENT

SMCS-5057, 5458 **i05921165**

NOTE	REF NO	GRAPHIC REF	PART NUMBER	QTY	PART NAME 1 2 3 4 5 6 (PRODUCT LEVEL)	SEE PAGE
	1	1	**8U-0284**	2	FLANGE-HALF	
	2	1	**127-4996**	2	FLANGE-HALF	
	3	1	*263-5618*	1	CLAMP AS (SINGLE) (REAR)	
		1	**263-5132**	2	CLAMP	
		1	**263-5133**	2	GROMMET	
	4	1	*263-5619*	1	CLAMP AS (SINGLE) (FRONT)	
		1	**263-5132**	2	CLAMP	
		1	**263-5134**	2	GROMMET	
	5	1	**329-2358**	1	TUBE AS	
	6	1	**330-4672**	1	TUBE AS	
Y	7	1	**389-2407**	2	VALVE GP-MANUAL (AUXILIARY, SHUTOFF, 2-WAY FLOW)	680
M	8	1	**101-7404**	4	BOLT-SOCKET HEAD (M10X1.5X30-MM)	
	9	1	**4J-0520**	1	SEAL-O-RING	
	10	1	**4J-0522**	1	SEAL-O-RING	
	11	1	**5K-9090**	2	SEAL-O-RING	
M	12	1	**8T-4183**	4	BOLT (M12X1.75X40-MM)	
M	13	1	**8T-4184**	4	BOLT (M12X1.75X45-MM)	
M	14	1	**8T-4198**	4	BOLT (M10X1.5X100-MM)	
	15	1	**8T-4223**	4	WASHER-HARD (13.5X25.5X3-MM THK)	
I	16	1	**200-4050**	2	HOSE AS	

I - REFER TO HYDRAULIC INFORMATION SYSTEM
M - METRIC PART
Y - SEPARATE ILLUSTRATION

418-8768 **LINES GP-STICK (**contd.**)** **i05921165**

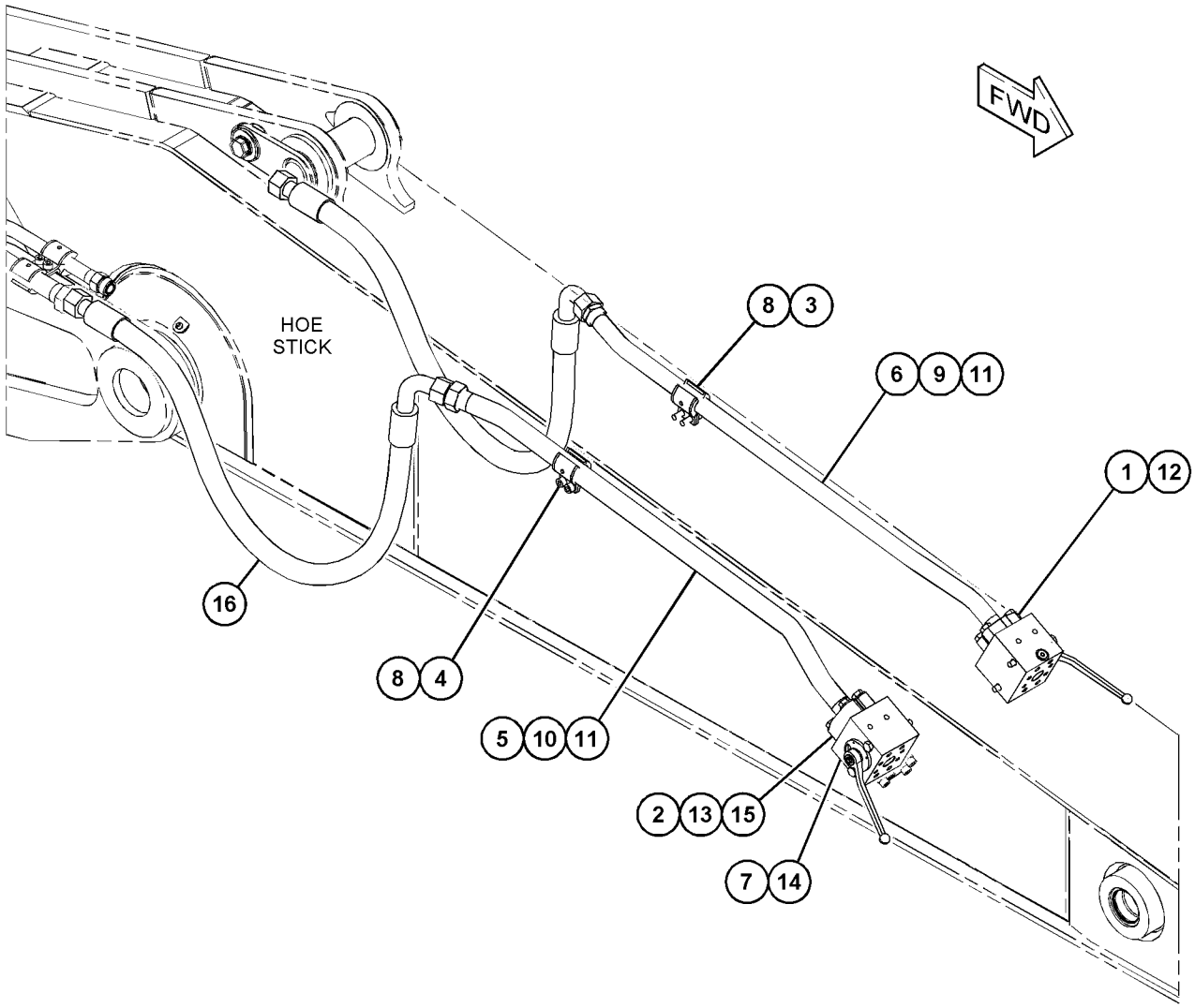

GRAPHIC #1 <END> g03574181

529-8079 LINES GP-STICK—BUCKET CYLINDER

S/N: CH91-UP
PART OF 427-9783 STICK AR
AN ATTACHMENT

SMCS-5057, 5458 **i07307866**

NOTE	REF NO	GRAPHIC REF	PART NUMBER	QTY	PART NAME 1 2 3 4 5 6 (PRODUCT LEVEL)	SEE PAGE
	1	1	**5W-9857**	2	FLANGE-HALF	
M	2	1	**105-3478**	4	BOLT-SOCKET HEAD (M10X1.5X35-MM)	
I	3	1	**196-5380**	1	HOSE AS	
I	4	1	**196-5381**	1	HOSE AS	
	5	1	**330-4658**	1	TUBE AS	
	6	1	**539-2806**	1	TUBE AS	
	7	1	**1P-3702**	1	SEAL-RECTANGULAR	
	8	1	**4J-5267**	2	SEAL-O-RING	
	9	1	**5K-9090**	1	SEAL-O-RING	
	10	1	**8T-4121**	4	WASHER-HARD (11X21X2.5-MM THK)	
M	11	1	**8T-4196**	4	BOLT (M10X1.5X35-MM)	
M	12	1	**8T-4198**	4	BOLT (M10X1.5X100-MM)	
	13	1	**8T-9403**	2	FLANGE-HALF	

I - REFER TO HYDRAULIC INFORMATION SYSTEM
M - METRIC PART

529-8079 **LINES GP-STICK (**contd.**)** **i07307866**

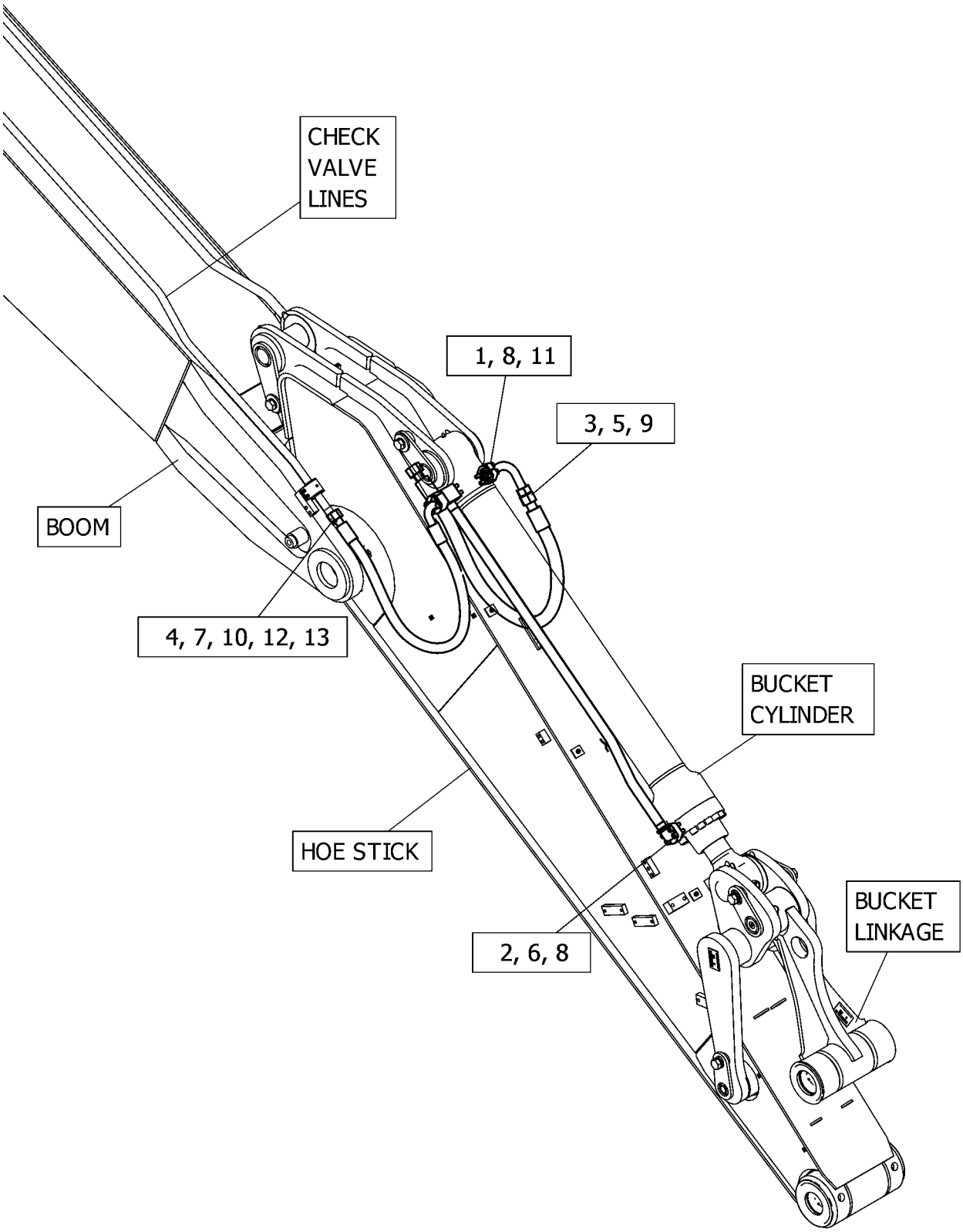

GRAPHIC #1 <END> g06278908

529-8080 LINES GP-STICK—BUCKET CYLINDER

S/N: CH91-UP
PART OF 454-8156 STICK AR
AN ATTACHMENT

SMCS-5057, 5458 **i07310653**

NOTE	REF NO	GRAPHIC REF	PART NUMBER	QTY	PART NAME 1 2 3 4 5 6 (PRODUCT LEVEL)	SEE PAGE
	1	1	**5W-9857**	2	FLANGE-HALF	
M	2	1	**105-3478**	4	BOLT-SOCKET HEAD (M10X1.5X35-MM)	
I	3	1	**200-4051**	1	HOSE AS	
I	4	1	**200-4052**	1	HOSE AS	
	5	1	**330-4658**	1	TUBE AS	
	6	1	**539-2806**	1	TUBE AS	
	7	1	**1P-3702**	1	SEAL-RECTANGULAR	
	8	1	**4J-5267**	2	SEAL-O-RING	
	9	1	**5K-9090**	1	SEAL-O-RING	
	10	1	**8T-4121**	4	WASHER-HARD (11X21X2.5-MM THK)	
M	11	1	**8T-4196**	4	BOLT (M10X1.5X35-MM)	
M	12	1	**8T-4198**	4	BOLT (M10X1.5X100-MM)	
	13	1	**8T-9403**	2	FLANGE-HALF	

I - REFER TO HYDRAULIC INFORMATION SYSTEM
M - METRIC PART

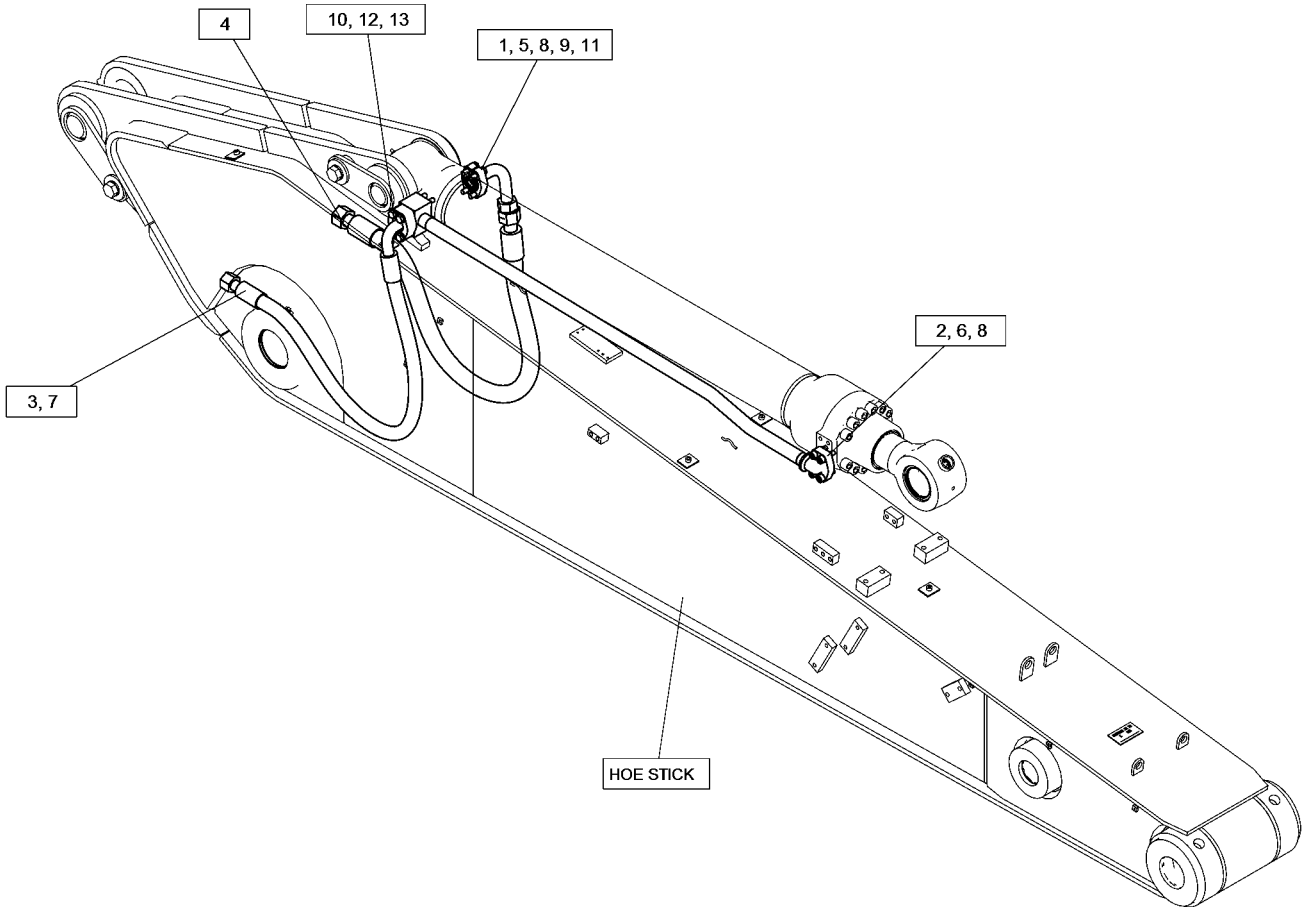

GRAPHIC #1 <END> g06280608

539-2809 LINES GP-STICK

S/N: CH91-UP
PART OF 426-2549 STICK AR
AN ATTACHMENT

SMCS-5057, 5458 **i07505710**

NOTE	REF NO	GRAPHIC REF	PART NUMBER	QTY	PART NAME 1 2 3 4 5 6 (PRODUCT LEVEL)	SEE PAGE
	1	1	**5W-9857**	2	FLANGE-HALF	
	2	1	**151-8866**	2	ELBOW	
I	3	1	**196-5380**	1	HOSE AS	
I	4	1	**196-5381**	1	HOSE AS	
I	5	1	**196-5382**	1	HOSE AS	
I	6	1	**196-5383**	1	HOSE AS	
Y	7	1	**290-9589**	1	VALVE GP-DIVERTER (STICK CYLINDER, ROD END)	669
Y	8	1	**290-9591**	1	VALVE GP-DIVERTER (STICK CYLINDER, HEAD END)	670
	9	1	**330-4657**	1	TUBE AS	
I	10	1	**539-2821**	1	HOSE AS	
M	11	1	**101-7398**	8	BOLT-SOCKET HEAD (M10X1.5X40-MM)	
	12	1	**1P-3702**	5	SEAL-RECTANGULAR	
	13	1	**4J-5267**	4	SEAL-O-RING	
	14	1	**5K-9090**	1	SEAL-O-RING	
	15	1	**6V-9746**	2	SEAL-O-RING	
M	16	1	**7X-2543**	4	BOLT (M10X1.5X120-MM)	
	17	1	**8T-4121**	20	WASHER-HARD (11X21X2.5-MM THK)	
M	18	1	**8T-4182**	16	BOLT (M10X1.5X45-MM)	
M	19	1	**8T-4198**	4	BOLT (M10X1.5X100-MM)	
	20	1	**8T-9403**	10	FLANGE-HALF	

I - REFER TO HYDRAULIC INFORMATION SYSTEM
M - METRIC PART
Y - SEPARATE ILLUSTRATION

539-2809 **LINES GP-STICK (**contd.**)** **i07505710**

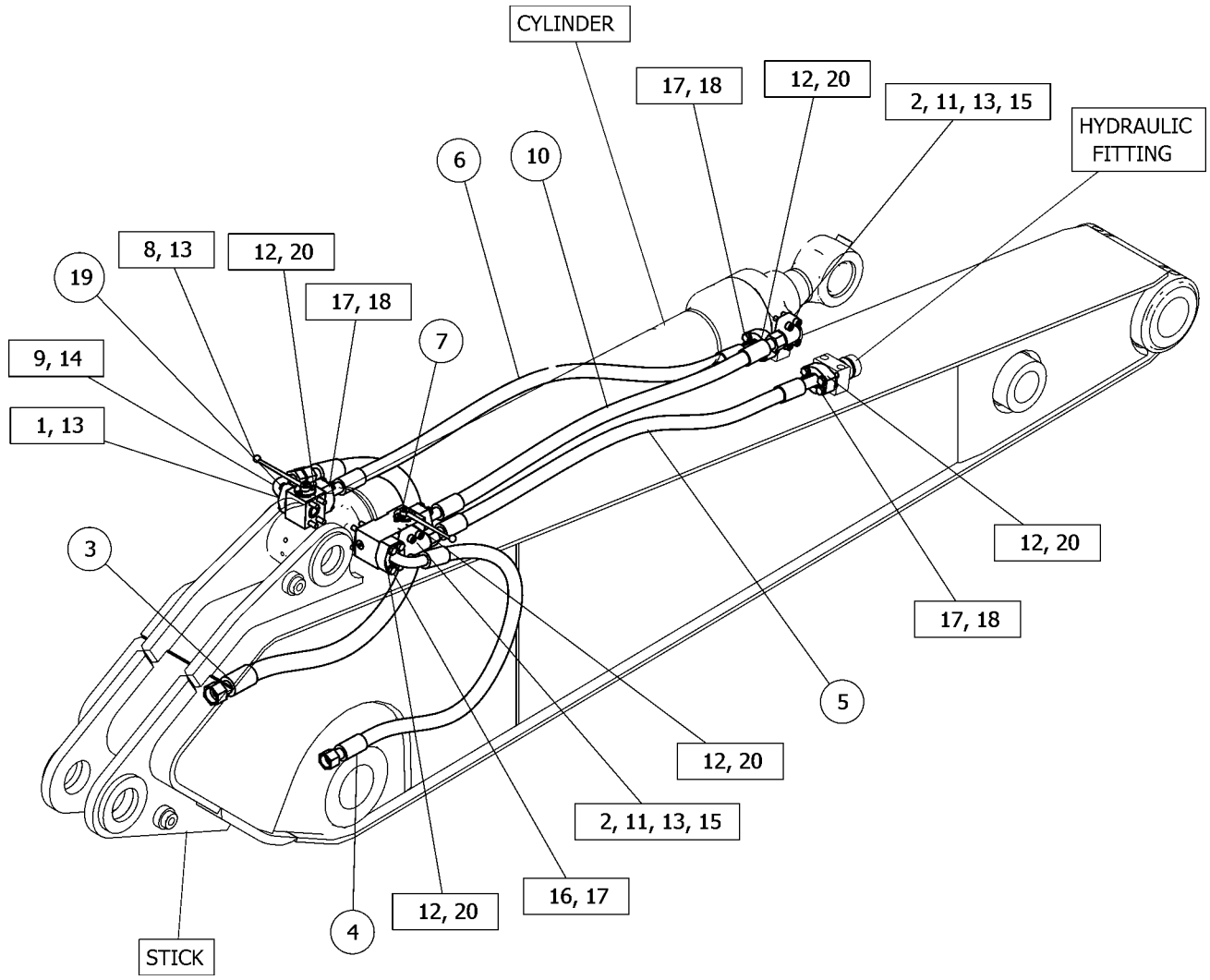

GRAPHIC #1 <END> g06282313

539-2810 LINES GP-STICK—DIVERTER VALVE

S/N: CH91-UP
PART OF 426-0345 STICK AR
AN ATTACHMENT

SMCS-5057, 5458 **i07694845**

NOTE	REF NO	GRAPHIC REF	PART NUMBER	QTY	PART NAME 1 2 3 4 5 6 (PRODUCT LEVEL)	SEE PAGE
	1	1	**5W-9857**	2	FLANGE-HALF	
	2	1	**151-8866**	2	ELBOW	
I	3	1	**196-5382**	1	HOSE AS	
I	4	1	**196-5383**	1	HOSE AS	
I	5	1	**200-4051**	1	HOSE AS	
I	6	1	**200-4052**	1	HOSE AS	
Y	7	1	**290-9589**	1	VALVE GP-DIVERTER (STICK CYLINDER, ROD END)	669
Y	8	1	**290-9591**	1	VALVE GP-DIVERTER (STICK CYLINDER, HEAD END)	670
	9	1	**330-4657**	1	TUBE AS	
I	10	1	**539-2821**	1	HOSE AS	
M	11	1	**101-7398**	8	BOLT-SOCKET HEAD (M10X1.5X40-MM)	
	12	1	**1P-3702**	5	SEAL-RECTANGULAR	
	13	1	**4J-5267**	4	SEAL-O-RING	
	14	1	**5K-9090**	1	SEAL-O-RING	
	15	1	**6V-9746**	2	SEAL-O-RING	
M	16	1	**7X-2543**	4	BOLT (M10X1.5X120-MM)	
	17	1	**8T-4121**	20	WASHER-HARD (11X21X2.5-MM THK)	
M	18	1	**8T-4182**	16	BOLT (M10X1.5X45-MM)	
M	19	1	**8T-4198**	4	BOLT (M10X1.5X100-MM)	
	20	1	**8T-9403**	10	FLANGE-HALF	

I - REFER TO HYDRAULIC INFORMATION SYSTEM
M - METRIC PART
Y - SEPARATE ILLUSTRATION

539-2810 **LINES GP-STICK (**contd.**)** **i07694845**

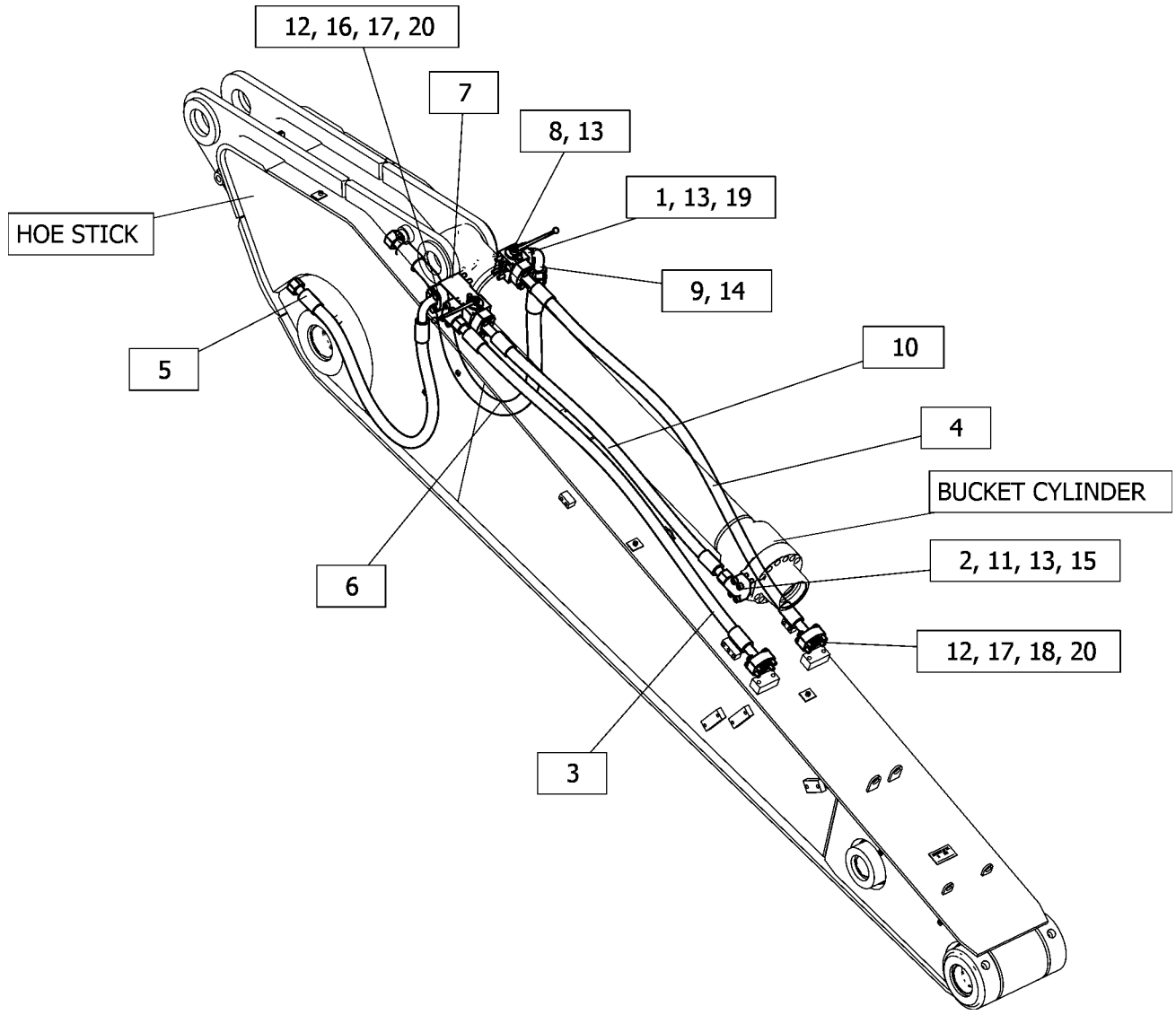

GRAPHIC #1 <END> g06349609

264-8993 LINES GP-SWING MOTOR

S/N: CH91-UP
PART OF 449-2784 HYDRAULIC AR
ALSO AN ATTACHMENT

SMCS-5057 **i05934402**

NOTE	REF NO	GRAPHIC REF	PART NUMBER	QTY	PART NAME 1 2 3 4 5 6 (PRODUCT LEVEL)	SEE PAGE
	1	1	**8C-3451**	1	CAP-DUST (HYDRAULIC OIL)	
	2	1	**8T-2352**	1	TEE-FACE SEAL	
I	3	1	**190-8550**	1	HOSE AS	
I	4	1	**190-8551**	1	HOSE AS	
Y	5	1	*307-2787*	1	FILTER & MTG GP-OIL (HYDRAULIC)	381
	6	1	*148-8318*	2	CONNECTOR AS	
					(EACH INCLUDES)	
		1	**3K-0360**	1	SEAL-O-RING	
		1	**6V-8397**	1	SEAL-O-RING	
		1	**6V-8634**	1	CONNECTOR	
	7	1	**1P-3702**	4	SEAL-RECTANGULAR	
	8	1	**6V-8397**	1	SEAL-O-RING	
	9	1	**7K-1181**	4	STRAP-CABLE	
	10	1	**7X-3387**	1	VALVE AS-FLUID SAMPLING (HYDRAULIC TANK)	
	11	1	**8T-4121**	16	WASHER-HARD (11X21X2.5-MM THK)	
M	12	1	**8T-4182**	16	BOLT (M10X1.5X45-MM)	
	13	1	**8T-9403**	8	FLANGE-HALF	
	14	1	**200-6345**	1	SADDLE-MOUNTING (DUAL SWIVEL)	
	15	1	**204-2281**	2	STRAP-CABLE	
I	16	1	**113-0454**	2	HOSE AS	

I - REFER TO HYDRAULIC INFORMATION SYSTEM
M - METRIC PART
Y - SEPARATE ILLUSTRATION

264-8993 **LINES GP-SWING MOTOR (**contd.**)** **i05934402**

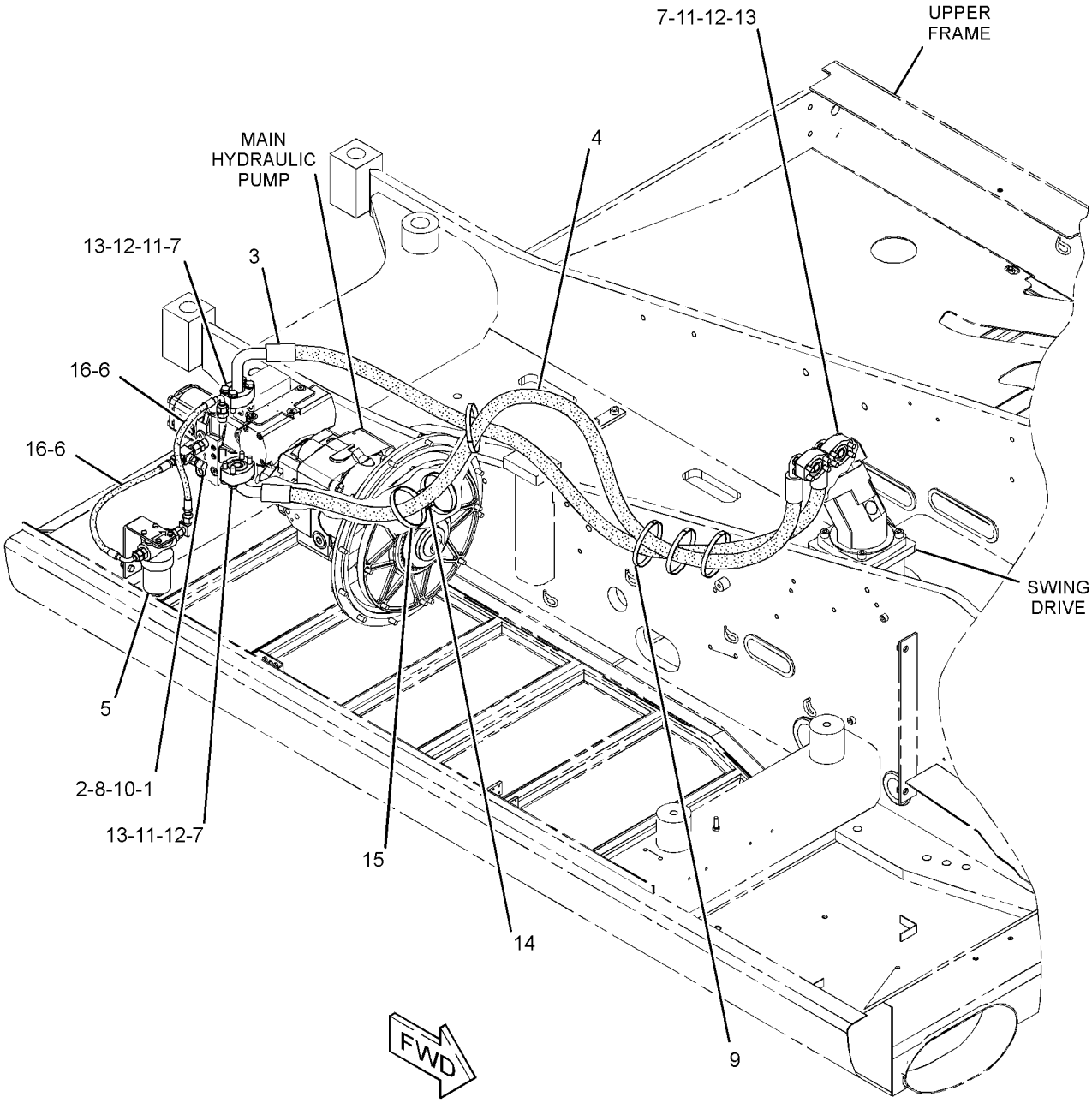

GRAPHIC #1 <END> g03039876

475-2051 LINES GP-SWING MOTOR

S/N: CH91-UP
PART OF 449-2784 HYDRAULIC AR
ALSO AN ATTACHMENT

SMCS-5057 **i06758727**

NOTE	REF NO	GRAPHIC REF	PART NUMBER	QTY	PART NAME 1 2 3 4 5 6 (PRODUCT LEVEL)	SEE PAGE
	1	1	**7K-1181**	4	STRAP-CABLE	
	2	1	**8T-2352**	1	TEE-FACE SEAL	
M	3	1	**8T-4182**	16	BOLT (M10X1.5X45-MM)	
I	4	1	**190-8550**	1	HOSE AS	
I	5	1	**190-8551**	1	HOSE AS	
Y	6	1	*475-2052*	1	FILTER & MTG GP-OIL (HYDRAULIC)	383
	7	1	*148-8318*	2	CONNECTOR AS	
					(EACH INCLUDES)	
		1	**3K-0360**	1	SEAL-O-RING	
		1	**6V-8397**	1	SEAL-O-RING	
		1	**6V-8634**	1	CONNECTOR	
	8	1	**1P-3702**	4	SEAL-RECTANGULAR	
	9	1	**200-6345**	1	SADDLE-MOUNTING (DUAL SWIVEL)	
	10	1	**204-2281**	2	STRAP-CABLE	
	11	1	**6V-8397**	1	SEAL-O-RING	
	12	1	**7X-3387**	1	VALVE AS-FLUID SAMPLING	
	13	1	**8C-3451**	1	CAP-DUST (HYDRAULIC OIL)	
	14	1	**8T-4121**	16	WASHER-HARD (11X21X2.5-MM THK)	
	15	1	**8T-9403**	8	FLANGE-HALF	
I	16	1	**113-0454**	2	HOSE AS	

I - REFER TO HYDRAULIC INFORMATION SYSTEM
M - METRIC PART
Y - SEPARATE ILLUSTRATION

475-2051 **LINES GP-SWING MOTOR (**contd.**)** **i06758727**

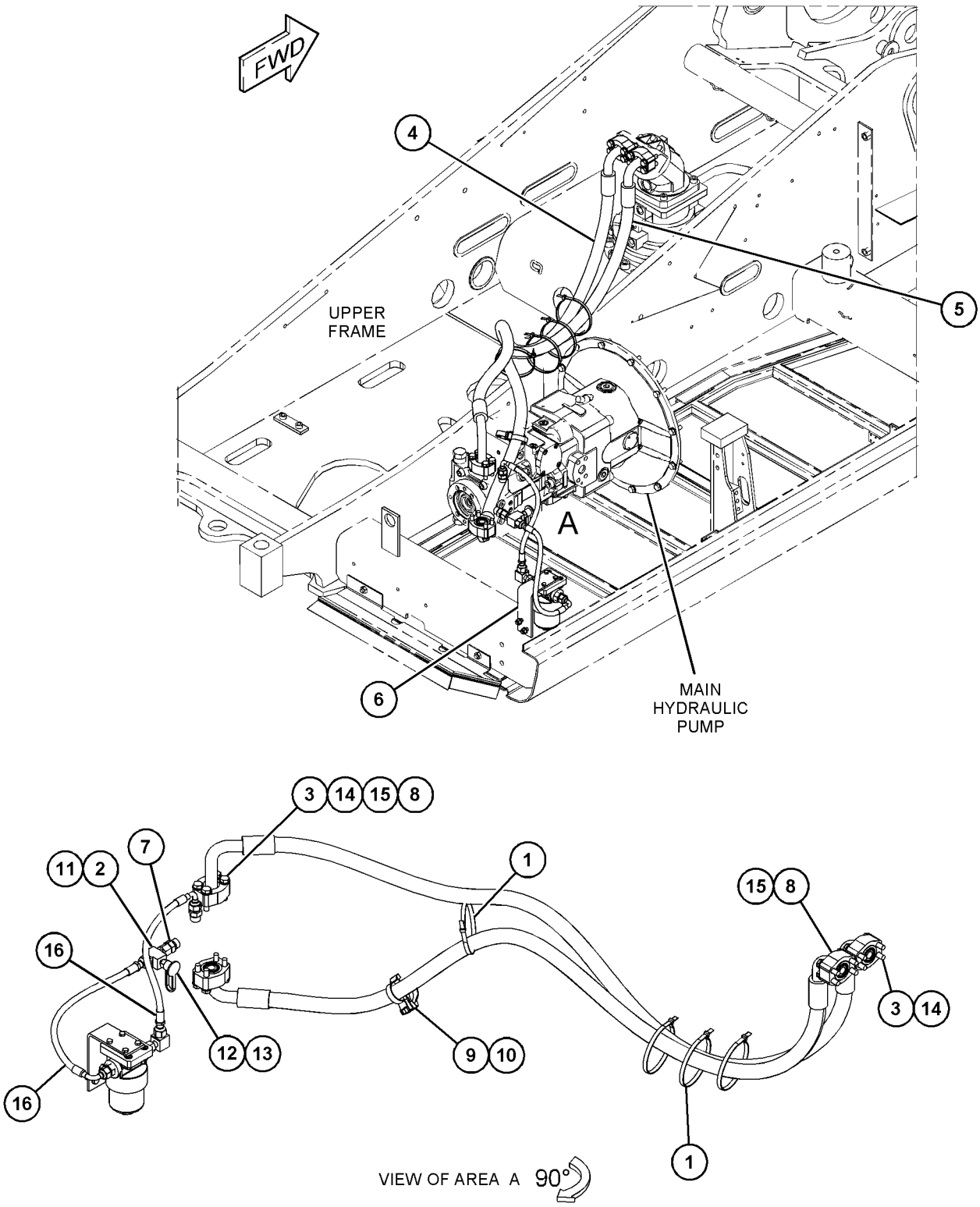

GRAPHIC #1 <END> g06119327

257-1709 MOTOR & MTG GP-TRAVEL

S/N: CH91-UP
PART OF 453-7111 POWER TRAIN AR
ALSO AN ATTACHMENT

SMCS-4351 **i05513198**

NOTE	REF NO	GRAPHIC REF	PART NUMBER	QTY	PART NAME 1 2 3 4 5 6 (PRODUCT LEVEL)	SEE PAGE
YR	1	1	**291-3711**	1	MOTOR GP-PISTON (TRAVEL)	586
M	2	1	**8T-4193**	4	BOLT (M16X2X50-MM)	
	3	1	**9X-8257**	4	WASHER (17.5X30X3.5-MM THK)	

M - METRIC PART
R - REMANUFACTURED PART MAY BE AVAILABLE
Y - SEPARATE ILLUSTRATION

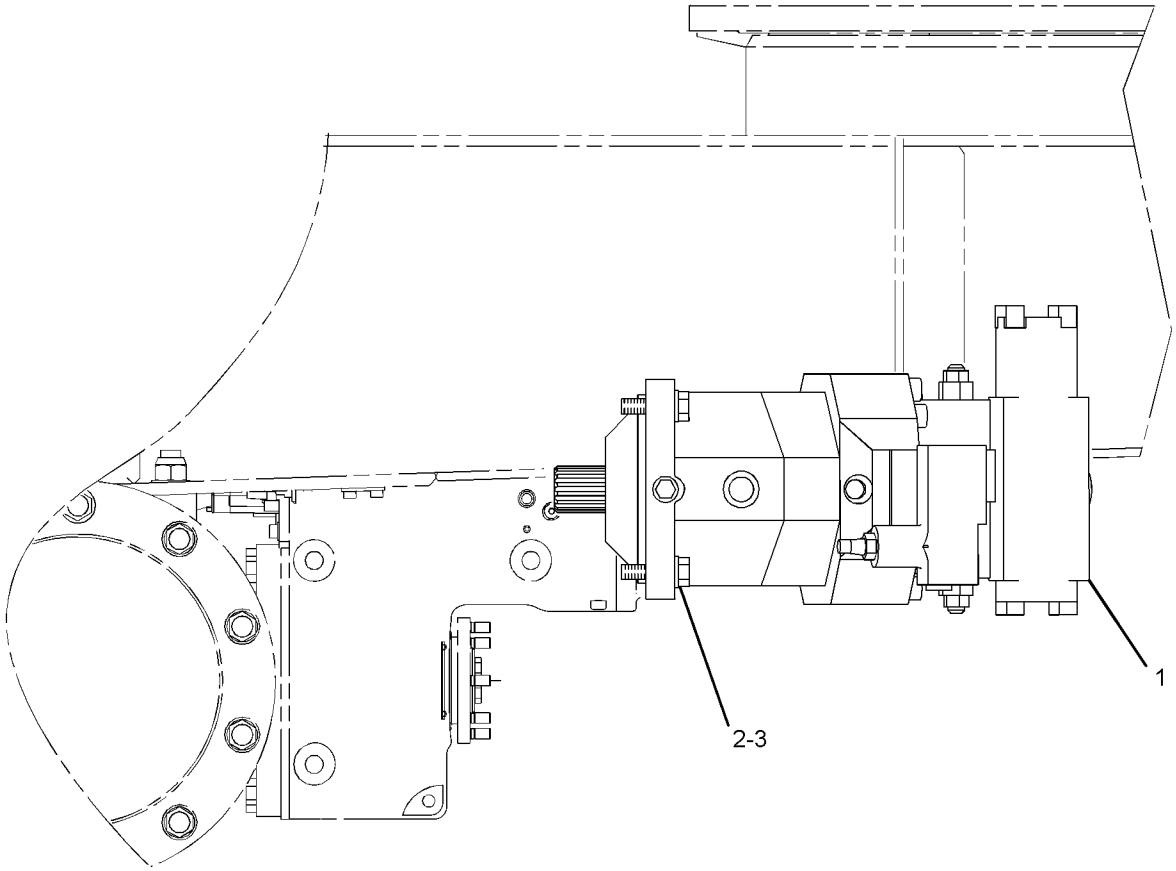

RIGHT SIDE VIEW

GRAPHIC #1 <END> g01318892

253-9836 MOTOR GP-GEAR—HYDRAULIC FAN

S/N: CH91-UP
PART OF 454-7364 COOLING AR
ALSO AN ATTACHMENT

SMCS-1386, 5061 **i05495089**

NOTE	REF NO	GRAPHIC REF	PART NUMBER	QTY	PART NAME 1 2 3 4 5 6 (PRODUCT LEVEL)	SEE PAGE
	1	1	**197-4858**	1	PLATE	
Y	2	1	**281-6268**	1	MOTOR GP-GEAR (HYDRAULIC FAN)	584
	3	1	**7X-7729**	4	WASHER (11X25X3-MM THK)	
M	4	1	**8T-4136**	4	BOLT (M10X1.5X25-MM)	
	5	1	**8T-4224**	4	WASHER-HARD (8.8X16X2-MM THK)	
M	6	1	**8T-4908**	4	BOLT (M8X1.25X25-MM)	

M - METRIC PART
Y - SEPARATE ILLUSTRATION

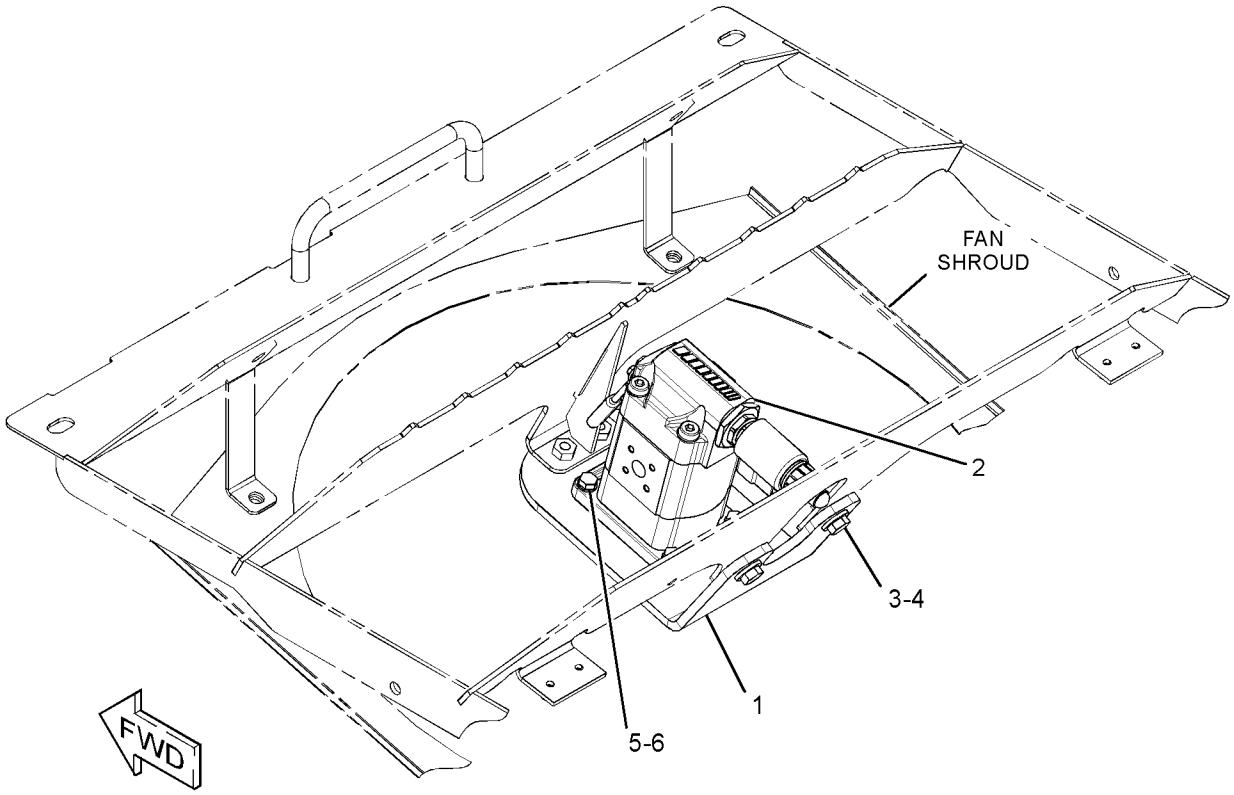

GRAPHIC #1 <END> g01309655

281-6268 MOTOR GP-GEAR—HYDRAULIC FAN

S/N: CH91-UP
PART OF 253-9836 MOTOR GP-GEAR
ALSO AN ATTACHMENT

SMCS-1386, 5061 **i05495151**

NOTE	REF NO	GRAPHIC REF	PART NUMBER	QTY	PART NAME 1 2 3 4 5 6 (PRODUCT LEVEL)	SEE PAGE
	1	1	**299-2149**	1	BEARING AS	
		1	**095-0919**	1	RING-RETAINING	
	2	1	**299-2150**	1	SENSOR AS-SPEED (FAN)	
M	3	1	**191-8920**	1	BOLT-SOCKET HEAD (M6X1X12-MM)	
M	4	1	**108-4282**	2	BOLT-SOCKET HEAD (M10X1.5X100-MM)	
	5	1	**299-2151**	1	VALVE GP-SOLENOID (HYDRAULIC FAN MOTOR)	
		1	**299-5448**	1	KIT-SEAL (SOLENOID VALVE, FAN)	
					(INCLUDES O-RING SEALS & BACKUP RINGS)	
		1	**291-5804**	1	NUT-CAP	
		1	**6V-4589**	1	SEAL-O-RING	
M	6	1	**295-4801**	1	NUT (M14X1.5-THD)	
	7	1	**3B-4509**	1	LOCKWASHER	
	8	1	**3E-4333**	1	KEY-WOODRUFF	
	9	1	**8U-8074**	1	COUPLING	
M	10	1	**095-0662**	2	BOLT-SOCKET HEAD (M10X1.5X125-MM)	
					PARTS SHOWN IN GRAPHIC(S) WITHOUT A REFERENCE NUMBER ARE NOT SERVICED SEPARATELY	
					AVAILABLE REPAIR KIT(S):	
			357-9936	1	KIT-SEAL (GEAR MOTOR)	
					(INCLUDES O-RING SEALS & ALSO PARTS MARKED J IN THE GRAPHIC)	

M - METRIC PART

281-6268 **MOTOR GP-GEAR (**contd.**)** **i05495151**

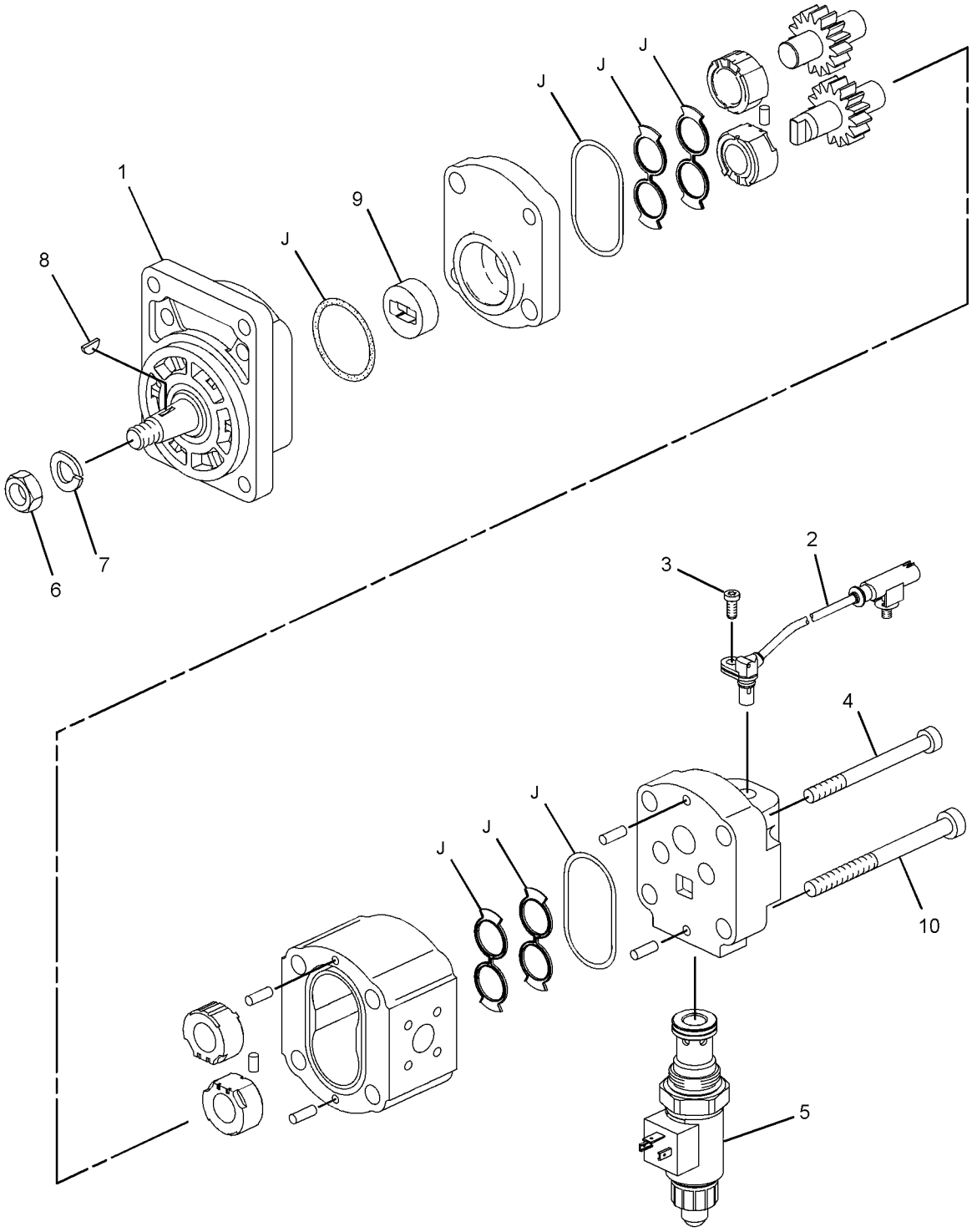

GRAPHIC #1 <END> g02435927

291-3711 MOTOR GP-PISTON—TRAVEL*R

S/N: CH91-UP
PART OF 257-1709 MOTOR & MTG GP-TRAVEL
ALSO AN ATTACHMENT

SMCS-5058 **i05513200**

NOTE	REF NO	GRAPHIC REF	PART NUMBER	QTY	PART NAME 1 2 3 4 5 6 (PRODUCT LEVEL)	SEE PAGE
Y	1	1	**275-8157**	1	ROTATING GP-MOTOR	602
Y	2	1	**245-3661**	1	HEAD GP-MOTOR	395
	3	1	**9S-8005**	1	PLUG (3/4-16-THD)	
	4	1	**033-6028**	1	SEAL-O-RING	
	5	1	**8T-0707**	1	RING-RETAINING (INTERNAL)	
	6	1	**6E-3337**	1	SEAL-SHAFT	
	7	1	**124-9850**	1	SHIM (3-MM THK)	
	8	1	**3J-0634**	1	SEAL-O-RING	
	9	1	**9S-8008**	1	PLUG (1-1/16-12-THD)	
	10	1	**033-6036**	1	SEAL-O-RING	
M	11	1	**125-1379**	1	SETSCREW-SOCKET (M12X1.75-THD)	
M	12	1	**6E-3283**	2	LOCKNUT (M12X1.75-THD)	
M	13	1	**123-4954**	1	SETSCREW (M12X1.75-THD)	
Y	14	1	**293-0511**	1	VALVE GP-BRAKE CONTROL (HYDRAULIC MOTOR)	654

M - METRIC PART
Y - SEPARATE ILLUSTRATION

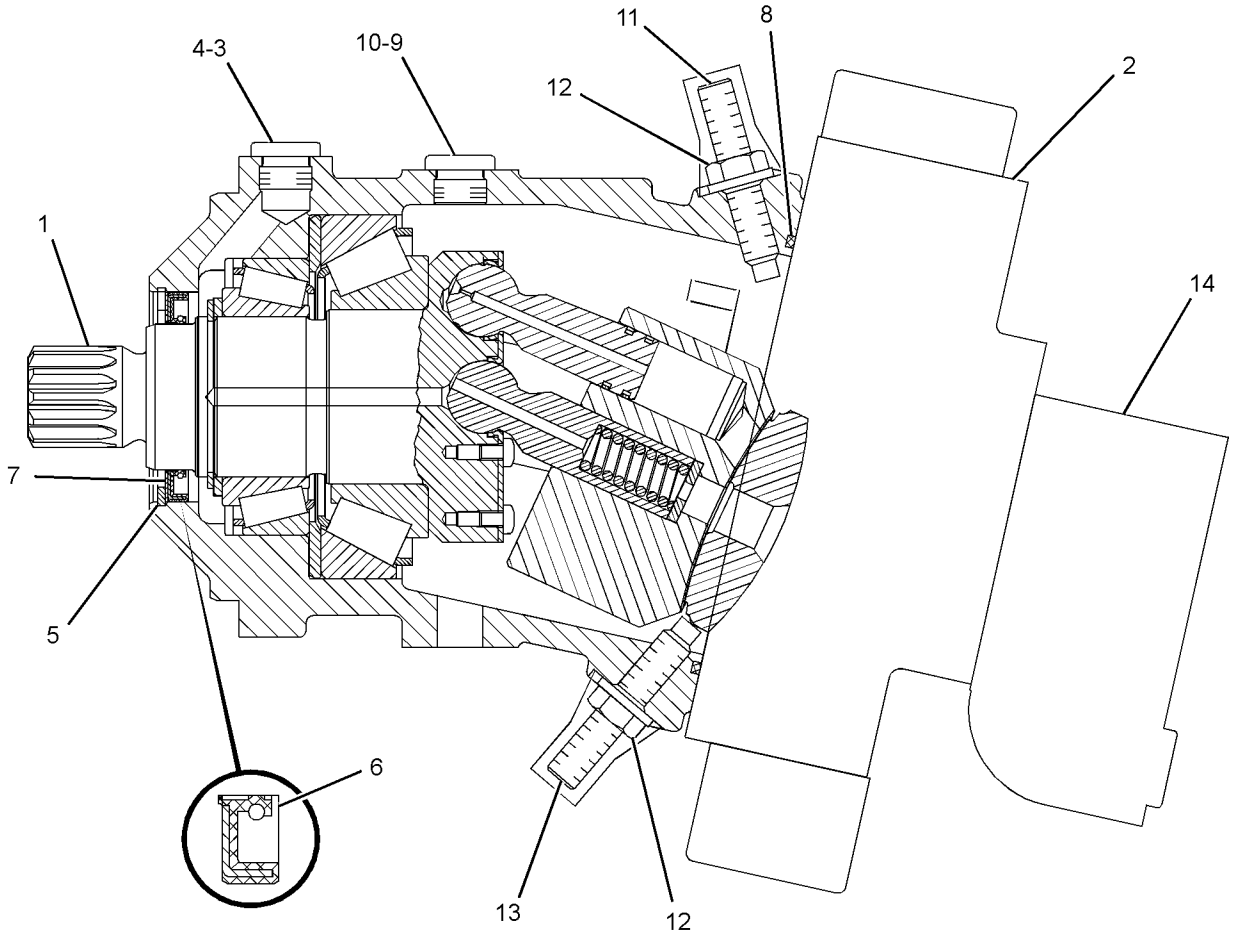

GRAPHIC #1 <END> g01328568

368-2783 MOTOR GP-SWING

S/N: CH91-UP
PART OF 111-1858 DRIVE GP-SWING
ALSO AN ATTACHMENT

SMCS-5058 **i05972401**

NOTE	REF NO	GRAPHIC REF	PART NUMBER	QTY	PART NAME 1 2 3 4 5 6 (PRODUCT LEVEL)	SEE PAGE
	1	1	**157-0055**	1	HOUSING-MOTOR	
	2	1	**157-0056**	1	PLATE-PORT	
	3	1	**099-3094**	1	DOWEL	
	4	1	**6V-1179**	1	SEAL-O-RING	
M	5	1	**8T-1159**	6	BOLT-SOCKET HEAD (M10X1.5X25-MM)	
	6	1	**9S-8004**	1	PLUG (9/16-18-THD)	
	7	1	**3J-1907**	1	SEAL-O-RING	
	8	1	**317-3531**	1	COVER AS	
			139-2840	1	SEAL-SHAFT	
	9	1	**095-0944**	1	RING-RETAINING	
	10	1	**6V-8002**	1	SEAL-O-RING	
B	11	1	**331-1114**	1	SHIM (0.5-MM THK)	
B	12	1	**180-1375**	2	SHIM (0.1-MM THK)	
B	13	1	**180-1376**	1	SHIM (0.3-MM THK)	

B - USE AS REQUIRED
M - METRIC PART

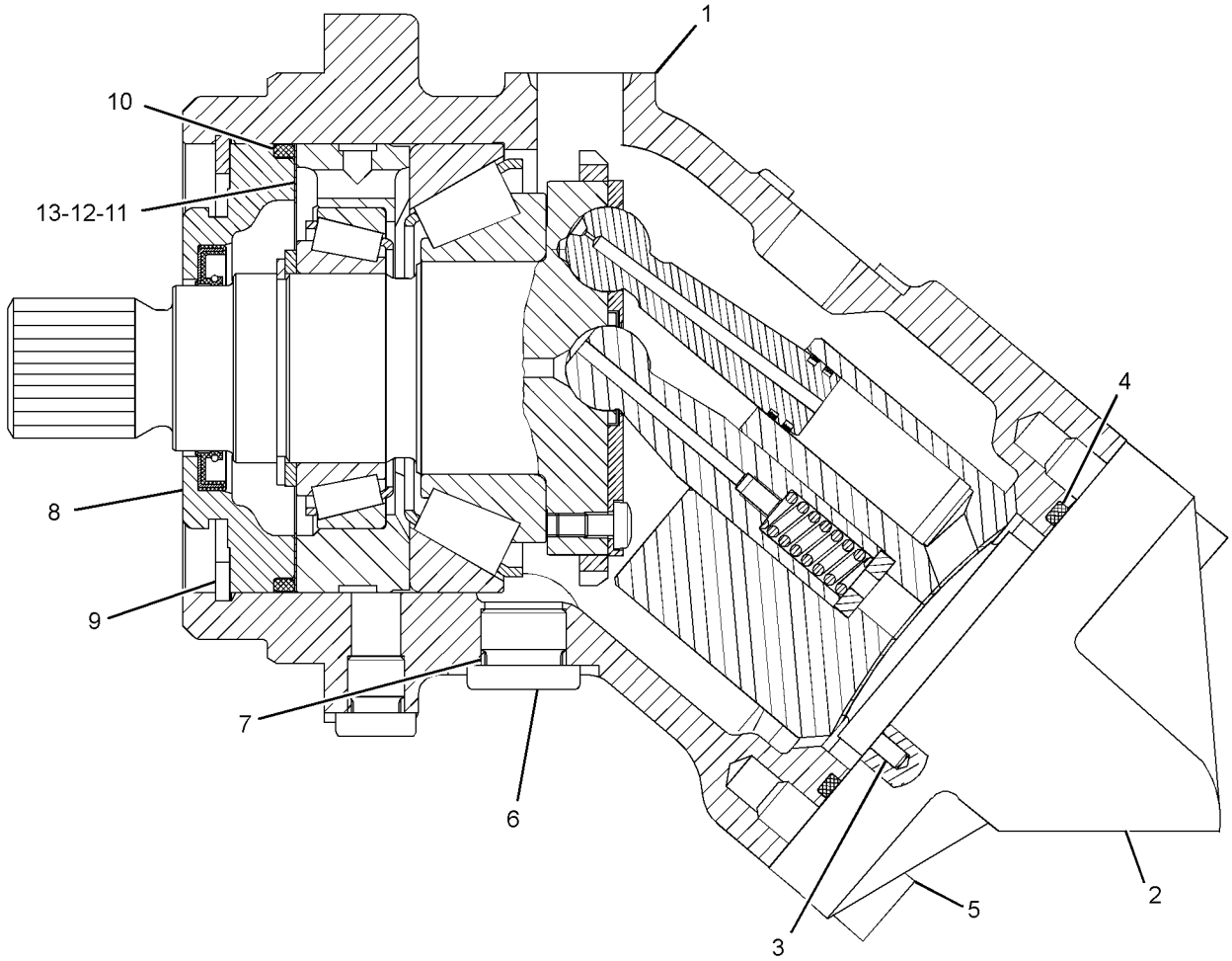

GRAPHIC #1 <END> g02419136

340-3459 PLUG GP—HYDRAULIC TANK

S/N: CH91-UP
PART OF 453-3005 VALVE & LINES AR
AN ATTACHMENT

SMCS-5051, 5057 **i05937845**

NOTE	REF NO	GRAPHIC REF	PART NUMBER	QTY	PART NAME 1 2 3 4 5 6 (PRODUCT LEVEL)	SEE PAGE
	1	1	*148-8408*	1	PLUG AS	
		1	**3D-2824**	1	SEAL-O-RING	
		1	**9S-4183**	1	PLUG (1-1/16-12-THD)	

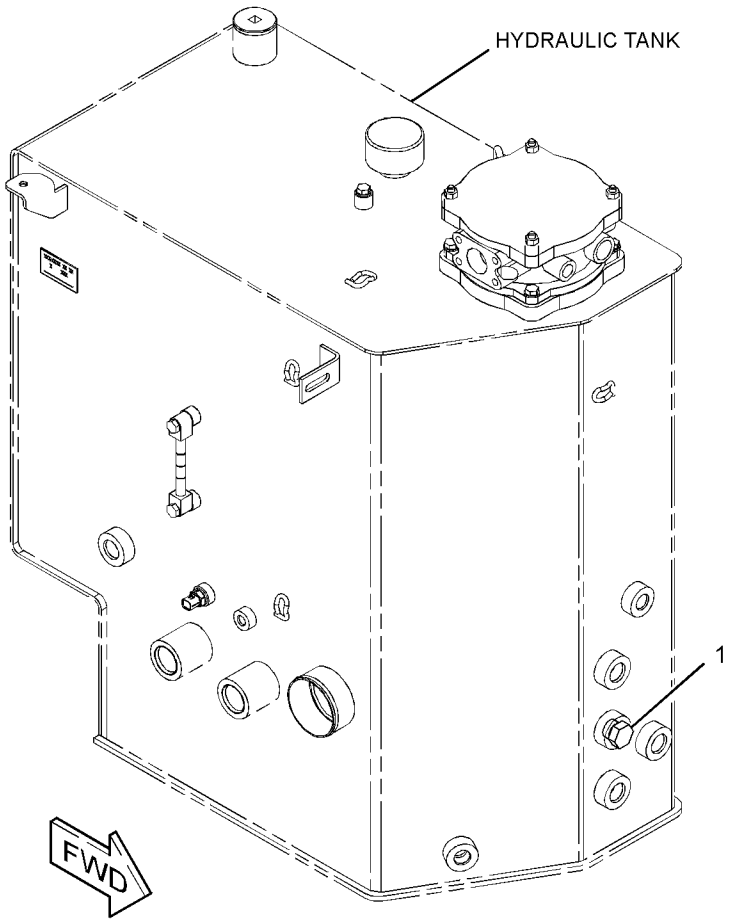

GRAPHIC #1 <END> g03060598

472-3500 PLUG GP-CONTROL VALVE

S/N: CH91-UP

PART OF 425-9134, 446-2738 VALVE & LINES AR

AN ATTACHMENT

SMCS-5051 **i06110834**

NOTE	REF NO	GRAPHIC REF	PART NUMBER	QTY	PART NAME 1 2 3 4 5 6 (PRODUCT LEVEL)	SEE PAGE
	1	1	*148-8408*	2	PLUG AS	
					(EACH INCLUDES)	
		1	**3D-2824**	1	SEAL-O-RING	
		1	**9S-4183**	1	PLUG (1-1/16-12-THD)	

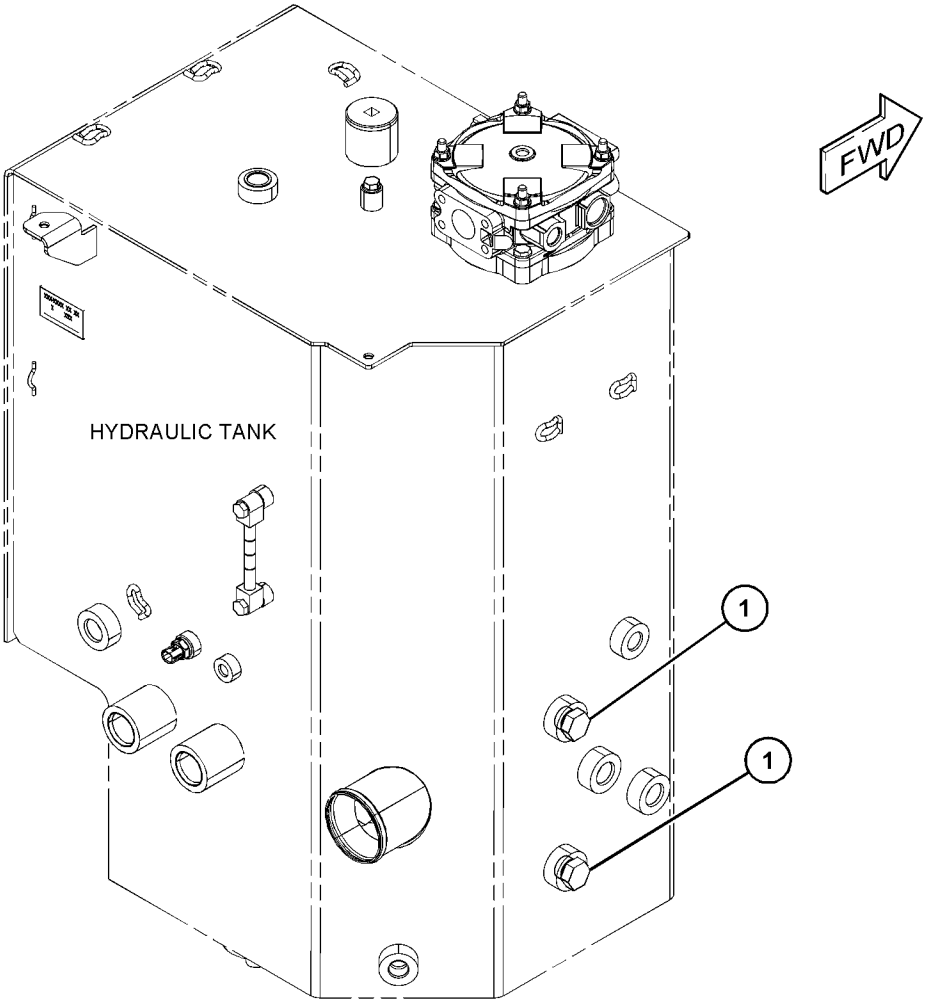

GRAPHIC #1 <END> g03875021

472-3510 PLUG GP-CONTROL VALVE

S/N: CH91-UP

PART OF 425-3925, 446-2745 VALVE & LINES AR

AN ATTACHMENT

SMCS-5051 **i06110832**

NOTE	REF NO	GRAPHIC REF	PART NUMBER	QTY	PART NAME 1 2 3 4 5 6 (PRODUCT LEVEL)	SEE PAGE
	1	1	*148-8408*	3	PLUG AS	
					(EACH INCLUDES)	
		1	**3D-2824**	1	SEAL-O-RING	
		1	**9S-4183**	1	PLUG (1-1/16-12-THD)	

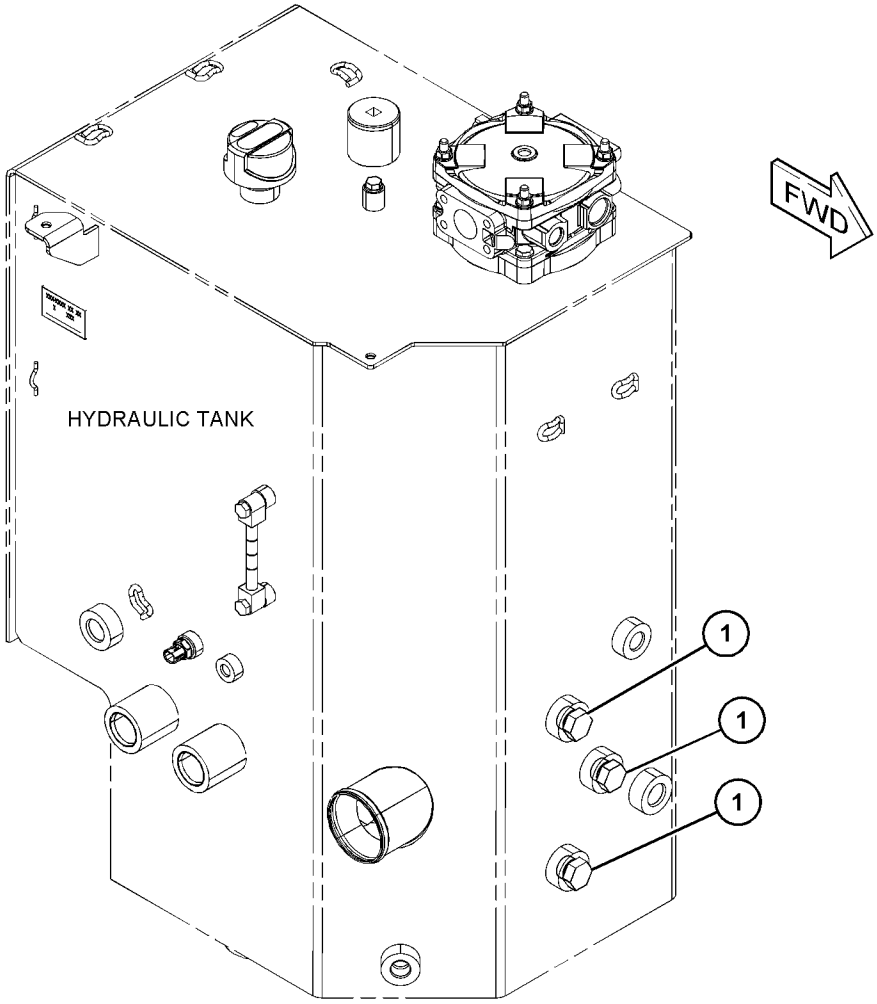

GRAPHIC #1 <END> g03875022

283-3190 PUMP & MTG GP-GEAR

S/N: CH91-UP
PART OF 449-2784 HYDRAULIC AR
ALSO AN ATTACHMENT

SMCS-5073 **i05496581**

NOTE	REF NO	GRAPHIC REF	PART NUMBER	QTY	PART NAME 1 2 3 4 5 6 (PRODUCT LEVEL)	SEE PAGE
M	1	1	**100-4830**	2	BOLT (M10X1.5X20-MM)	
Y	2	1	**281-6269**	1	PUMP GP-GEAR (HYDRAULIC FAN)	594

M - METRIC PART
Y - SEPARATE ILLUSTRATION

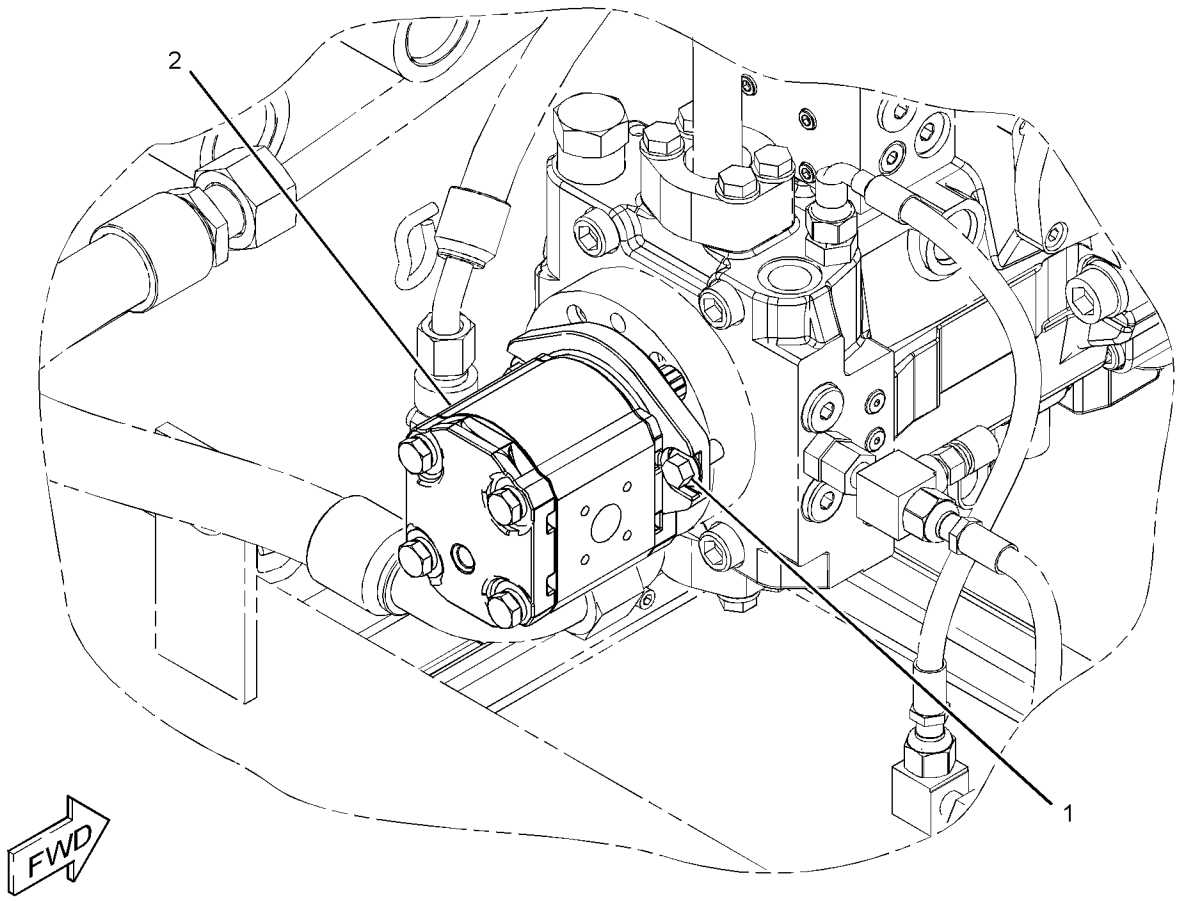

GRAPHIC #1 <END> g01324779

432-8257 PUMP & MTG GP-HYDRAULIC

S/N: CH91-UP
PART OF 482-4529 ENGINE AR
ALSO AN ATTACHMENT

SMCS-1387, 4324, 5055, 5070, 5073, 5084 **i05944318**

NOTE	REF NO	GRAPHIC REF	PART NUMBER	QTY	PART NAME 1 2 3 4 5 6 (PRODUCT LEVEL)	SEE PAGE
Y	1	1	**432-8162**	1	PUMP GP-PISTON	601
	2	1	**096-0061**	2	STRAP-CABLE	
	3	1	**4P-8134**	1	CLIP (LADDER)	
	4	1	**8T-4121**	7	WASHER-HARD (11X21X2.5-MM THK)	
M	5	1	**8T-4195**	12	BOLT (M10X1.5X30-MM)	
BF			**1U-8846**		SEALANT-GASKET	

B - USE AS REQUIRED
F - NOT SHOWN
M - METRIC PART
Y - SEPARATE ILLUSTRATION

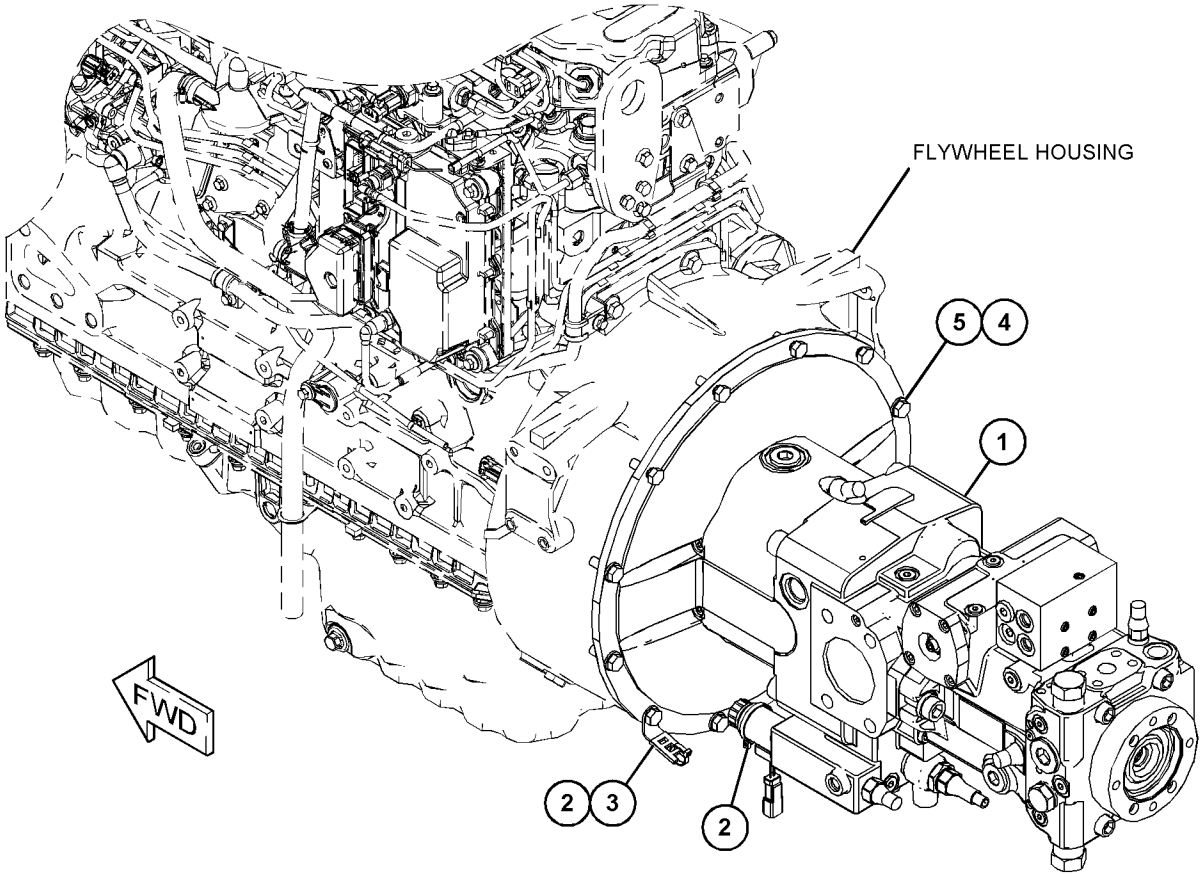

GRAPHIC #1 <END> g03558227

186-0499 PUMP & MTG GP-PILOT–BRAKE, STEERING

S/N: CH91-UP
PART OF 449-2784 HYDRAULIC AR
ALSO AN ATTACHMENT

SMCS-5085 **i05558147**

NOTE	REF NO	GRAPHIC REF	PART NUMBER	QTY	PART NAME 1 2 3 4 5 6 (PRODUCT LEVEL)	SEE PAGE
Y	1	1	**329-5735**	1	PUMP GP-GEAR (AUX, BRAKE, PILOT, STEERING)	595
M	2	1	**105-3484**	2	BOLT-SOCKET HEAD (M10X1.5X25-MM)	

M - METRIC PART
Y - SEPARATE ILLUSTRATION

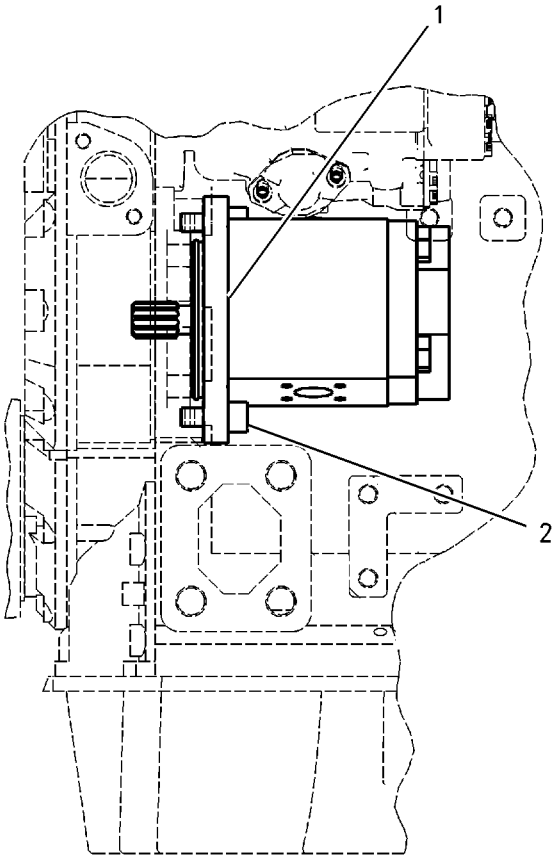

GRAPHIC #1 <END> g00834824

281-6269 PUMP GP-GEAR–HYDRAULIC FAN

S/N: CH91-UP

PART OF 283-3190 PUMP & MTG GP-GEAR

ALSO AN ATTACHMENT

SMCS-5073 **i05513010**

NOTE	REF NO	GRAPHIC REF	PART NUMBER	QTY	PART NAME 1 2 3 4 5 6 (PRODUCT LEVEL)	SEE PAGE
J	1	1	**199-7552**	1	LOCKWASHER	
	2	1	**113-7617**	4	DOWEL	
	3	1	**175-0137**	4	SHIM (3.0-MM THK)	
M	4	1	**8T-4198**	4	BOLT (M10X1.5X100-MM)	
					PARTS SHOWN IN GRAPHIC(S) WITHOUT A REFERENCE NUMBER ARE NOT SERVICED SEPARATELY	
					AVAILABLE REPAIR KIT(S):	
J			**287-4036**	1	KIT-SEAL (GEAR PUMP)	
					(ALSO INCLUDES PARTS MARKED J IN THE GRAPHIC)	

J - KIT MARKED J SERVICES PART(S) MARKED J
M - METRIC PART

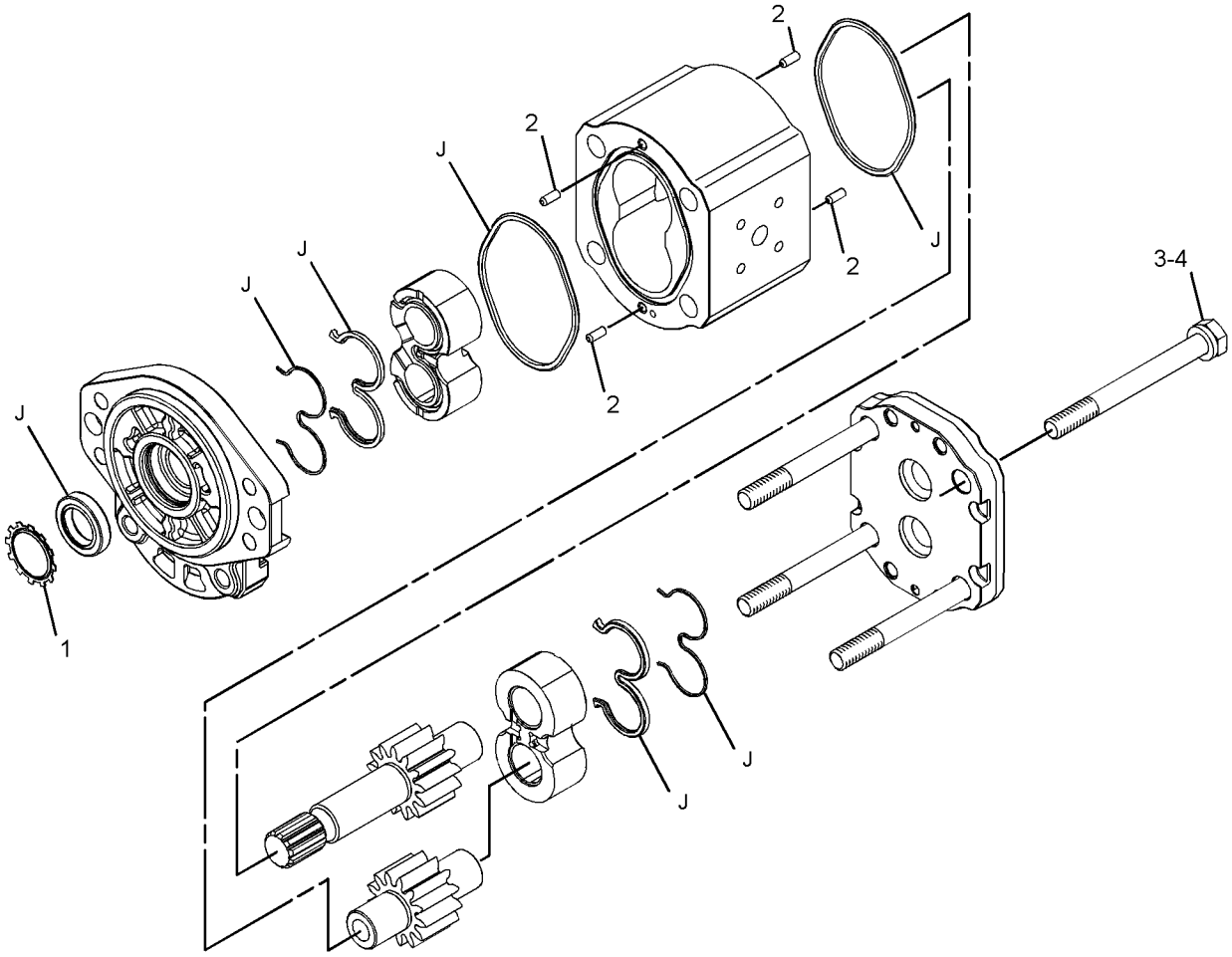

GRAPHIC #1 <END> g03084396

329-5735 PUMP GP-GEAR—AUX, BRAKE, PILOT, STEERING

S/N: CH91-UP
FIELD REPLACEMENT ORDER 329-5736—PAGE: 596
PART OF 186-0499 PUMP & MTG GP-PILOT
ALSO AN ATTACHMENT

SMCS-5073 **i05496571**

NOTE	REF NO	GRAPHIC REF	PART NUMBER	QTY	PART NAME 1 2 3 4 5 6 (PRODUCT LEVEL)	SEE PAGE
J	1	1	**199-7560**	1	RING-RETAINING	
M	2	1	**8T-6685**	4	BOLT (M10X1.5X110-MM)	
	3	1	**113-7617**	4	DOWEL	
J	4	1	**192-7120**	1	SEAL-O-RING	
					PARTS SHOWN IN GRAPHIC(S) WITHOUT A REFERENCE NUMBER ARE NOT SERVICED SEPARATELY	
					AVAILABLE REPAIR KIT(S):	
J			**329-7254**	1	KIT-SEAL (GEAR PUMP)	
					(ALSO INCLUDES RING SEALS, RETAINING RINGS, BACKUP RING, SEAL, PLUG, O-RING SEALS & PARTS MARKED J IN GRAPHIC)	

J - KIT MARKED J SERVICES PART(S) MARKED J
M - METRIC PART

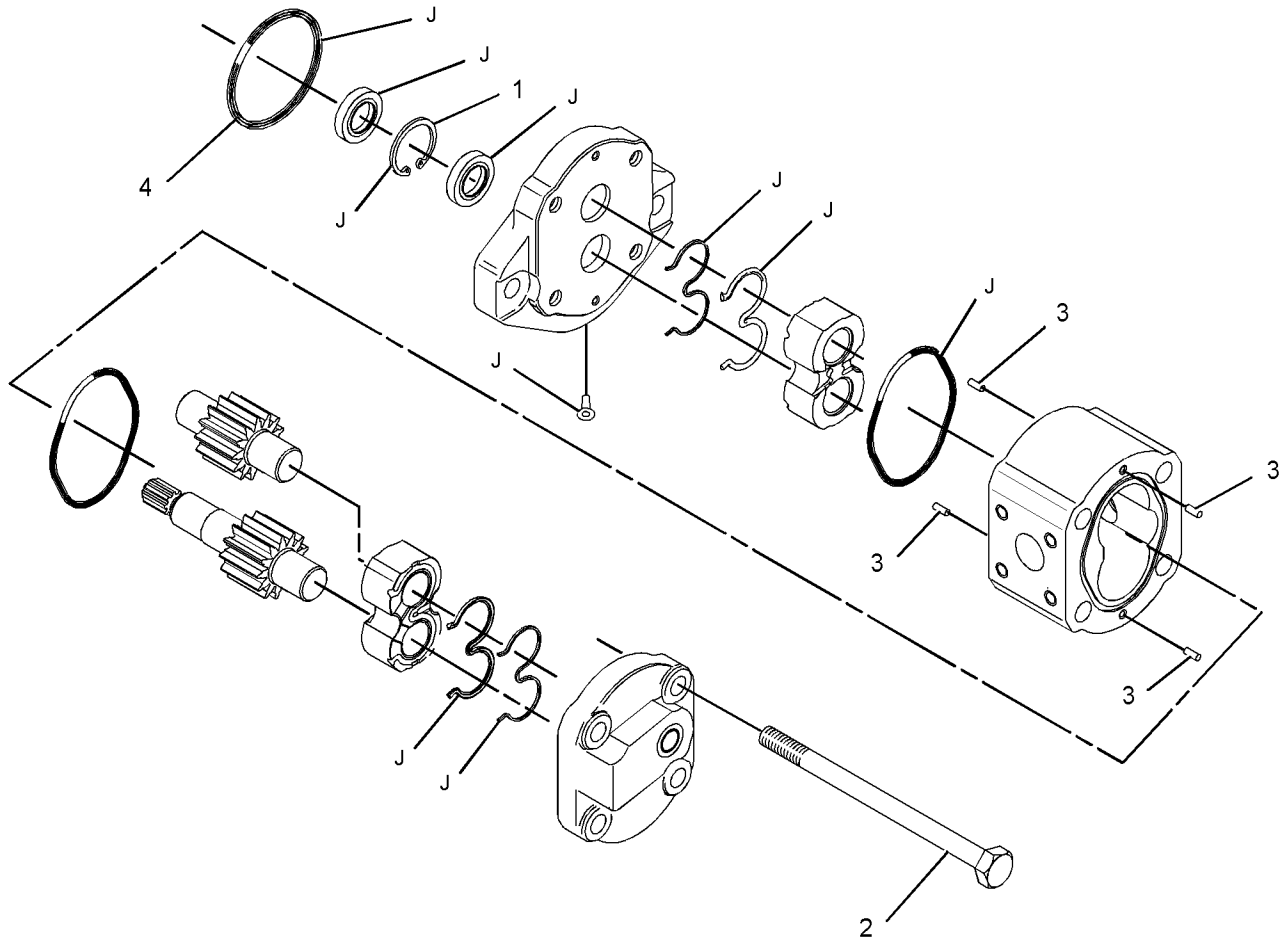

GRAPHIC #1 <END> g03084556

329-5736 PUMP GP-GEAR

S/N: CH91-UP

FIELD REPLACEMENT FOR 329-5735—PAGE: 595

SMCS-5073 **i05496572**

NOTE	REF NO	GRAPHIC REF	PART NUMBER	QTY	PART NAME 1 2 3 4 5 6 (PRODUCT LEVEL)	SEE PAGE
	1	1	**195-3042**	4	BOLT-SOCKET HEAD (M10X1.5X115-MM)	
	2	1	**113-7617**	4	DOWEL	
J	3	1	**192-7120**	1	SEAL-O-RING	
	4	1	**320-7146**	1	VALVE AS-RELIEF (AUX, BRAKE, PILOT, STEERING)	
	5	1	**9S-8002**	1	PLUG (7/16-20-THD)	
	6	1	**3J-7354**	1	SEAL-O-RING	
					AVAILABLE REPAIR KIT(S):	
J			**329-7255**	1	KIT-SEAL (GEAR PUMP)	
					(ALSO INCLUDES RETAINING RING, RING SEALS, BACKUP RING, SEAL, O-RING SEAL, PLUG & PARTS MARKED J IN GRAPHIC)	

J - KIT MARKED J SERVICES PART(S) MARKED J

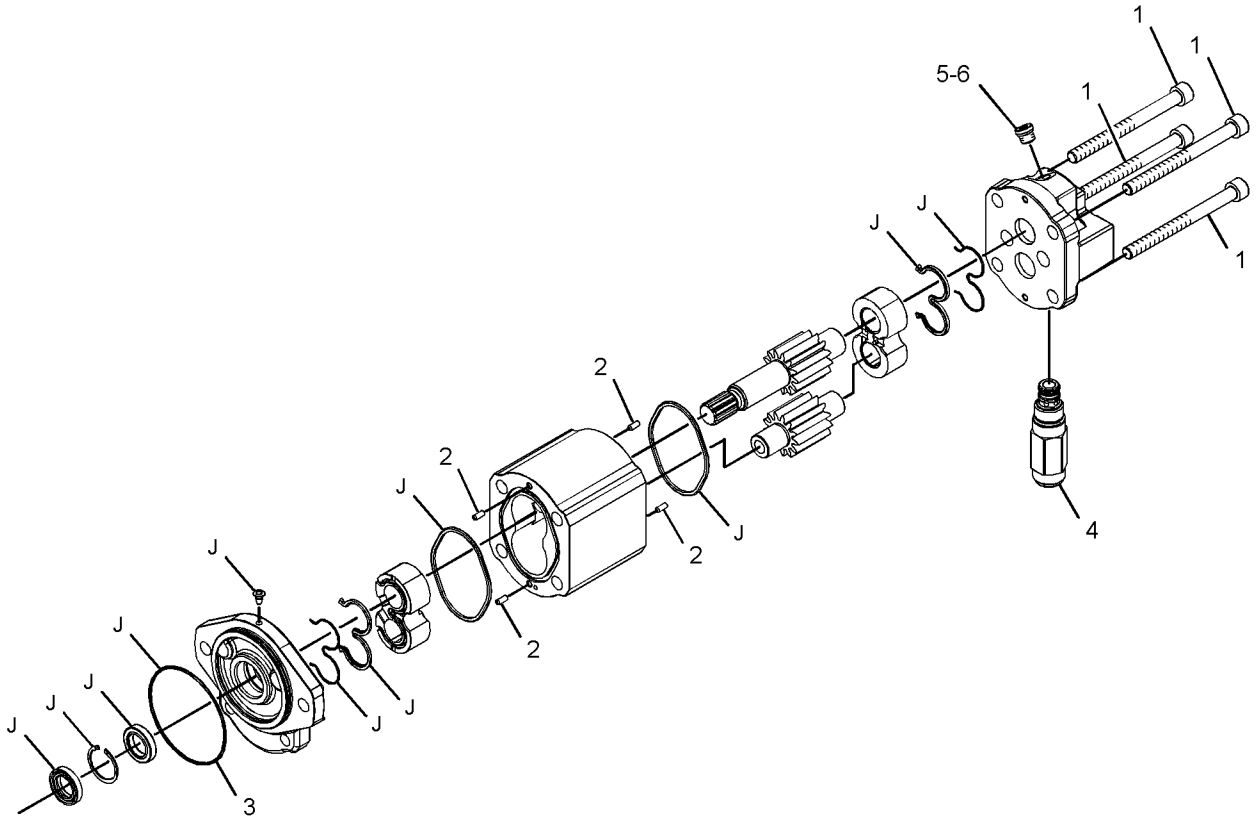

GRAPHIC #1 <END> g03086525

432-8567 PUMP GP-MAIN HYDRAULIC*R

S/N: CH91-UP
PART OF 432-8162 PUMP GP-PISTON
ALSO AN ATTACHMENT

SMCS-5070 **i06019915**

NOTE	REF NO	GRAPHIC REF	PART NUMBER	QTY	PART NAME 1 2 3 4 5 6 (PRODUCT LEVEL)	SEE PAGE
Y	1	1	**308-4199**	1	ROTATING GP-PUMP (BASIC)	603
Y	2	1	**253-6010**	1	HEAD GP-PUMP	399
Y	3	1	**439-0479**	1	VALVE GP-PUMP CONTROL	691
Y	4	1	**146-6553**	1	ACTUATOR GP-PUMP (MAXIMUM ANGLE)	332
Y	5	1	**178-2823**	1	ACTUATOR GP-PUMP (MINIMUM ANGLE)	333
Y	6	1	**430-9488**	1	DRIVE & MTG GP-PUMP	375
	7	1	**117-5716**	4	PIN	
	8	1	**174-9972**	2	PIN	
J	9	1	**191-3539**	2	NUT-SEAL	
J	10	1	**9T-3928**	4	PLUG AS	
					(EACH INCLUDES)	
		1	**187-8001**	1	SEAL	
M	11	1	**117-5718**	4	BOLT-SOCKET HEAD (M18X2.5-THD)	
J	12	1	**9M-5024**	1	SEAL-O-RING	
J	13	1	**9S-8008**	3	PLUG (1-1/16-12-THD)	
J	14	1	**3D-2824**	3	SEAL-O-RING	
	15	1	**125-8601**	2	PIN-SPRING	
J	16	1	**9S-8004**	1	PLUG (9/16-18-THD)	
	17	1	**3J-1907**	1	SEAL-O-RING	
					AVAILABLE REPAIR KIT(S):	
J			**443-6229**	1	KIT-SEAL (PISTON PUMP)	

J - KIT MARKED J INCLUDES PART(S) MARKED J
M - METRIC PART
Y - SEPARATE ILLUSTRATION

432-8567 **PUMP GP-MAIN HYDRAULIC (**contd.**)** **i06019915**

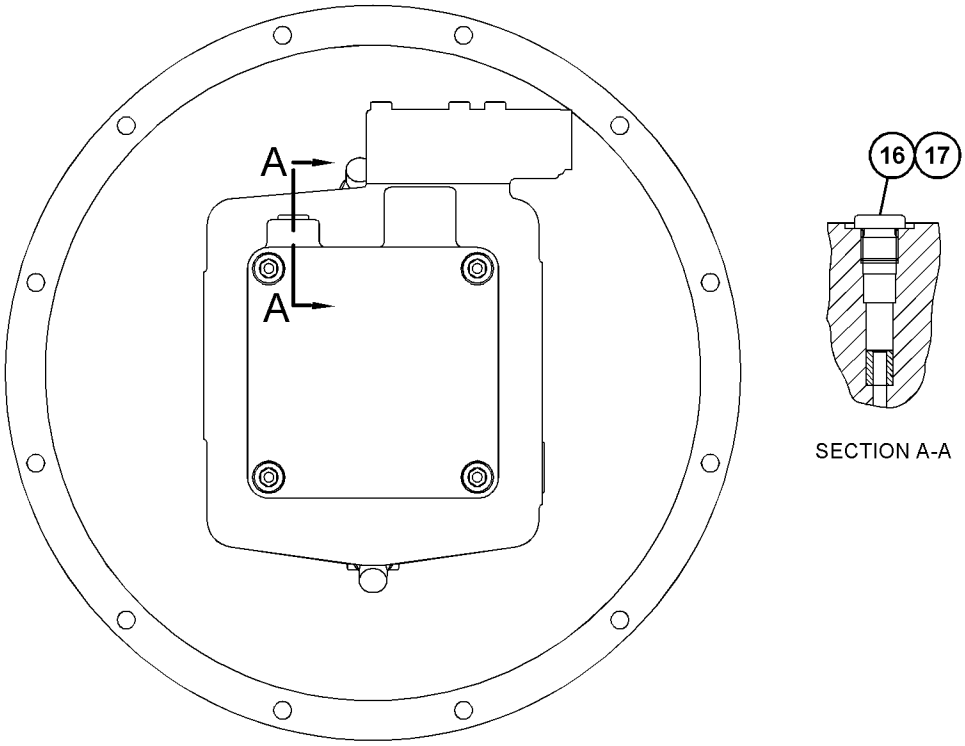

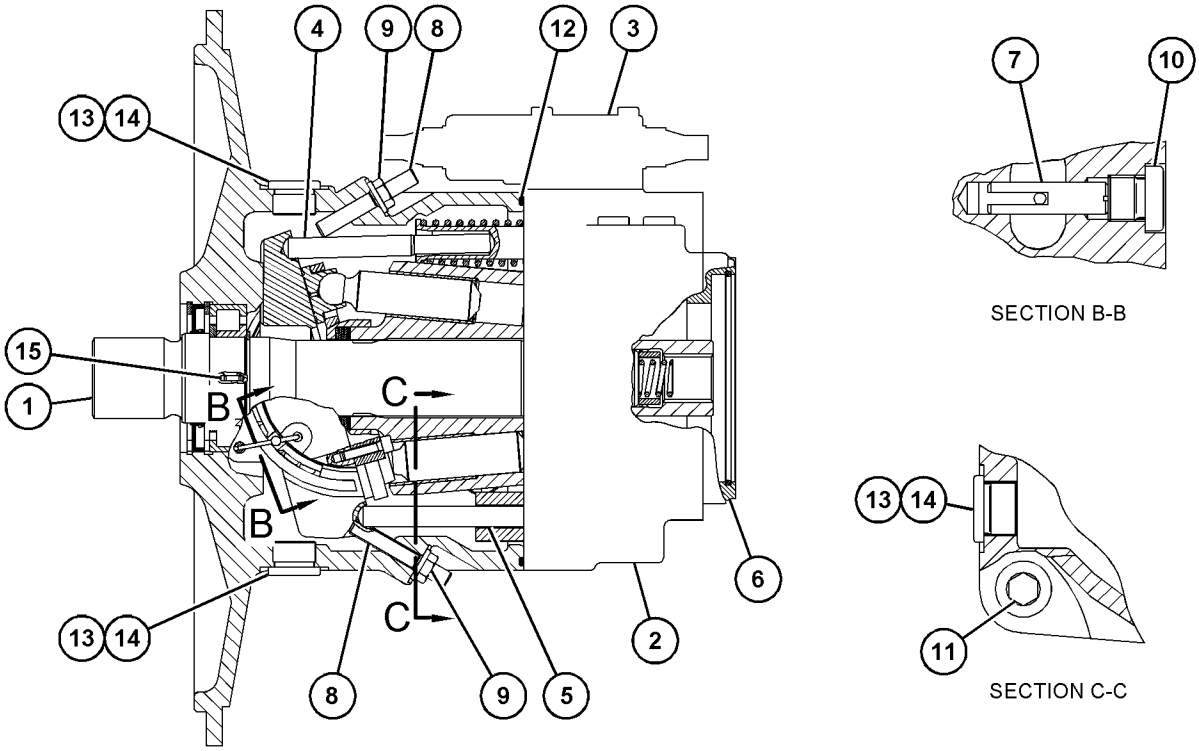

GRAPHIC #1 <END> g03566431

190-8199 PUMP GP-PISTON—SWING, CHARGE*R

S/N: CH91-UP
PART OF 432-8162 PUMP GP-PISTON
ALSO AN ATTACHMENT

SMCS-5070 **i05970092**

NOTE	REF NO	GRAPHIC REF	PART NUMBER	QTY	PART NAME 1 2 3 4 5 6 (PRODUCT LEVEL)	SEE PAGE
Y	1	1	**136-7701**	1	BARREL GP-PUMP	335
Y	2	1	**145-3542**	1	VALVE GP-PUMP CONTROL (PRESSURE COMPENSATOR)	689
Y	3	1	**145-3543**	1	HEAD GP-PUMP (ADAPTER)	397
	4	1	**152-1809**	1	PUMP GP-CHARGE	
		1	**6V-5778**	1	SEAL-O-RING	
		1	**179-0464**	2	SEAL-O-RING	
Y	5	1	**139-8929**	1	VALVE GP-PUMP CONTROL	688
	7	1	**122-9718**	1	PIN	
	8	1	**9S-8008**	1	PLUG (1-1/16-12-THD)	
	9	1	**099-5845**	2	PLUG	
	10	1	**112-4628**	4	SCREW (7/16-20X0.5-IN)	
	11	1	**9T-3726**	2	PLUG	
	12	1	**123-7575**	1	SCREW-LOCK	
	13	1	**6V-8978**	1	SEAL-O-RING	
M	14	1	**1G-3176**	1	SCREW-LOCK	
	15	1	**125-8601**	2	PIN-SPRING	
	16	1	**9T-3928**	1	PLUG AS	
		1	**187-8001**	1	SEAL	
	17	1	**8U-1361**	1	PLUG	
	18	1	**117-7235**	1	SCREW-ADJUSTMENT	
M	19	1	**6E-4240**	1	NUT-SEALING (M10X1-THD)	
	20	1	**117-7236**	1	PLUG	

M - METRIC PART
Y - SEPARATE ILLUSTRATION

190-8199 **PUMP GP-PISTON (**contd.**)** **i05970092**

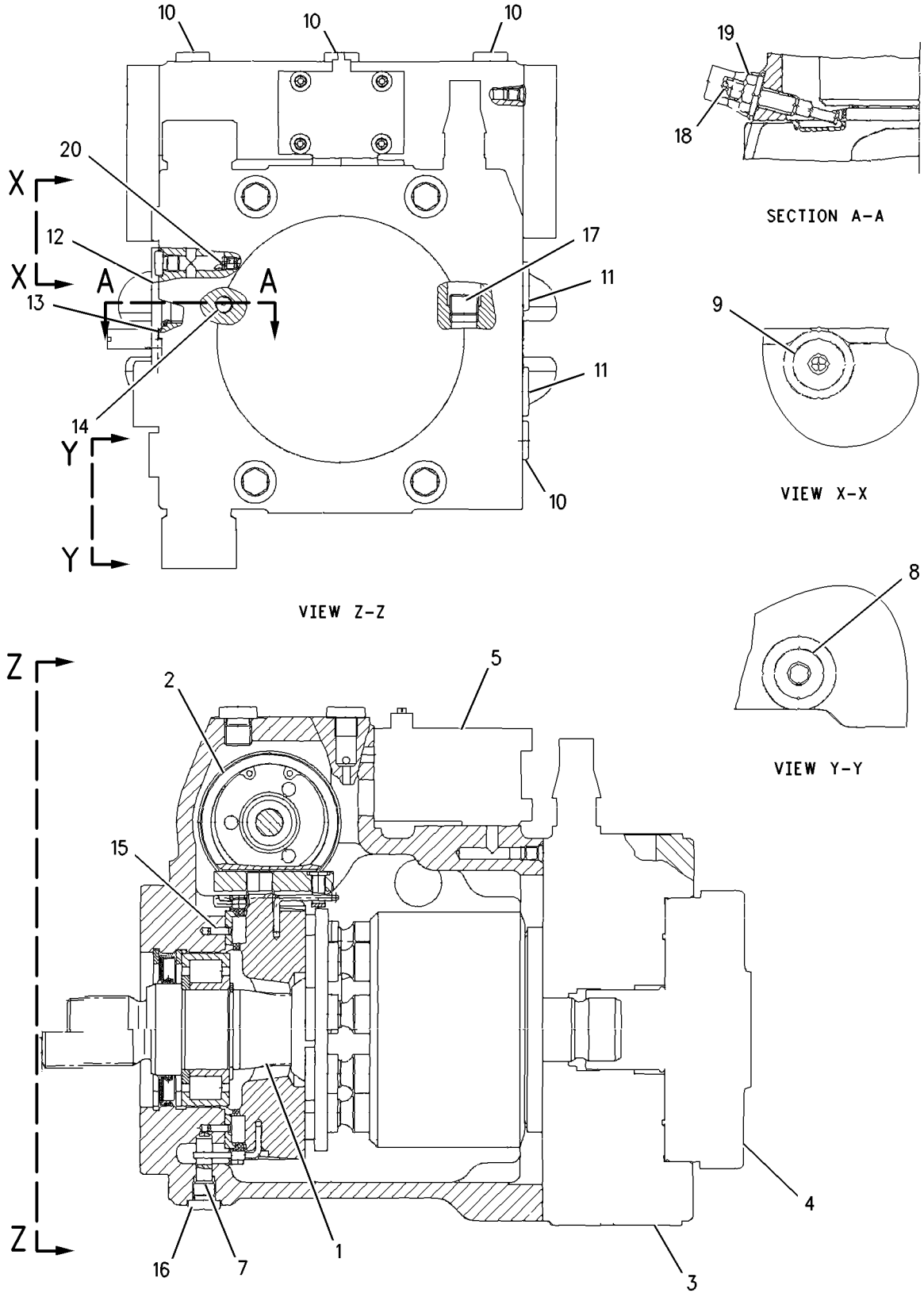

GRAPHIC #1 <END> g00822646

432-8162 PUMP GP-PISTON

S/N: CH91-UP

PART OF 432-8257 PUMP & MTG GP-HYDRAULIC

ALSO AN ATTACHMENT

SMCS-5070 **i05970073**

NOTE	REF NO	GRAPHIC REF	PART NUMBER	QTY	PART NAME 1 2 3 4 5 6 (PRODUCT LEVEL)	SEE PAGE
YR	1	1	**190-8199**	1	PUMP GP-PISTON (SWING, CHARGE)	599
YR	2	1	**432-8567**	1	PUMP GP-MAIN HYDRAULIC (IMPLEMENT, TRAVEL, WORK TOOL)	597
	3	1	**4J-2677**	2	WASHER (16.7X27X5-MM THK)	
M	4	1	**6V-8201**	2	BOLT-SOCKET HEAD (M16X2X45-MM)	

M - METRIC PART
R - REMANUFACTURED PART MAY BE AVAILABLE
Y - SEPARATE ILLUSTRATION

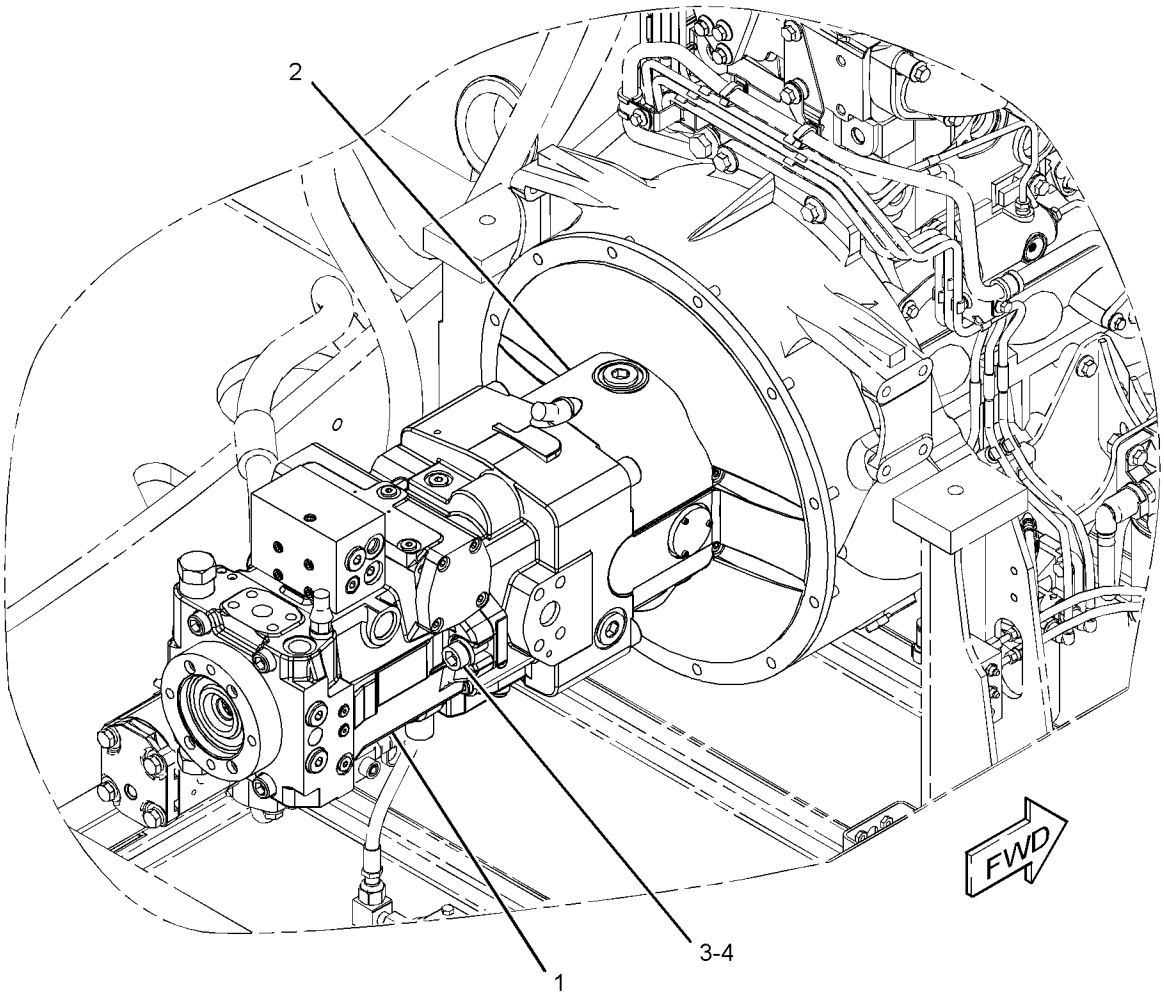

GRAPHIC #1 <END> g01325857

275-8157 ROTATING GP-MOTOR

S/N: CH91-UP
PART OF 291-3711 MOTOR GP-PISTON
ALSO AN ATTACHMENT

SMCS-5058 **i05513203**

NOTE	REF NO	GRAPHIC REF	PART NUMBER	QTY	PART NAME 1 2 3 4 5 6 (PRODUCT LEVEL)	SEE PAGE
Y	1	1	**275-8158**	1	BARREL GP-MOTOR	334
	2	1	**275-8159**	1	SHAFT GP-MOTOR	
	2A	1	**8C-3114**	1	RING-RETAINING	

Y - SEPARATE ILLUSTRATION

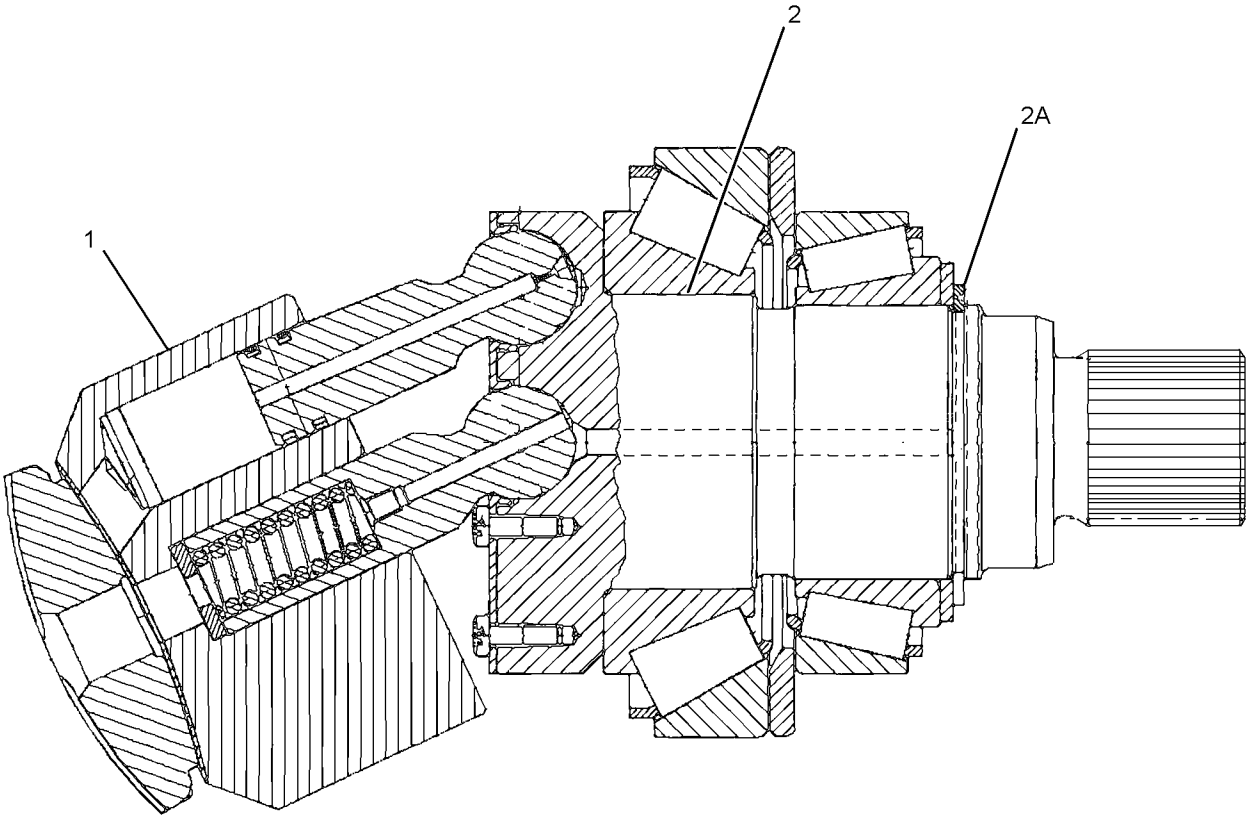

GRAPHIC #1 <END> g01320989

308-4199 ROTATING GP-PUMP—BASIC

S/N: CH91-UP

PART OF 432-8567 PUMP GP-MAIN HYDRAULIC

ALSO AN ATTACHMENT

SMCS-5070 **i05970113**

NOTE	REF NO	GRAPHIC REF	PART NUMBER	QTY	PART NAME 1 2 3 4 5 6 (PRODUCT LEVEL)	SEE PAGE
	1	1	**308-4200**	1	CYLINDER AS	
	2	1	**199-2441**	9	PISTON AS	
	3	1	**6E-0715**	1	SPRING-CUP	
	4	1	**117-5761**	1	CRADLE	
	5	1	**117-5762**	1	SHAFT-DRIVE	
	6	1	**6E-0719**	4	ROD	
B	7	1	**6E-0720**	1	SHIM (1.1-MM THK)	
B	8	1	**6E-0721**	2	SHIM (0.9-MM THK)	
B	9	1	**6E-0722**	1	SHIM (1.3-MM THK)	
B	10	1	**6E-0723**	1	SHIM (0.7-MM THK)	
	11	1	**6E-0726**	1	PLATE-RETAINER	
	12	1	**6E-1569**	1	RETAINER	
	13	1	**117-5764**	1	LINER	
	14	1	**6E-1570**	2	RETAINER	
	15	1	**6E-1571**	1	BEARING AS	
	16	1	**117-5765**	1	BEARING-ROLLER	
	17	1	**8T-4241**	1	RING-RETAINING	
	18	1	**183-8452**	2	RING-RETAINING	
	19	1	**360-1712**	1	SEAL-LIP TYPE	
M	20	1	**120-4204**	4	BOLT-SOCKET HEAD (M6X25-MM)	

B - USE AS REQUIRED
M - METRIC PART

308-4199 **ROTATING GP-PUMP** (contd.) **i05970113**

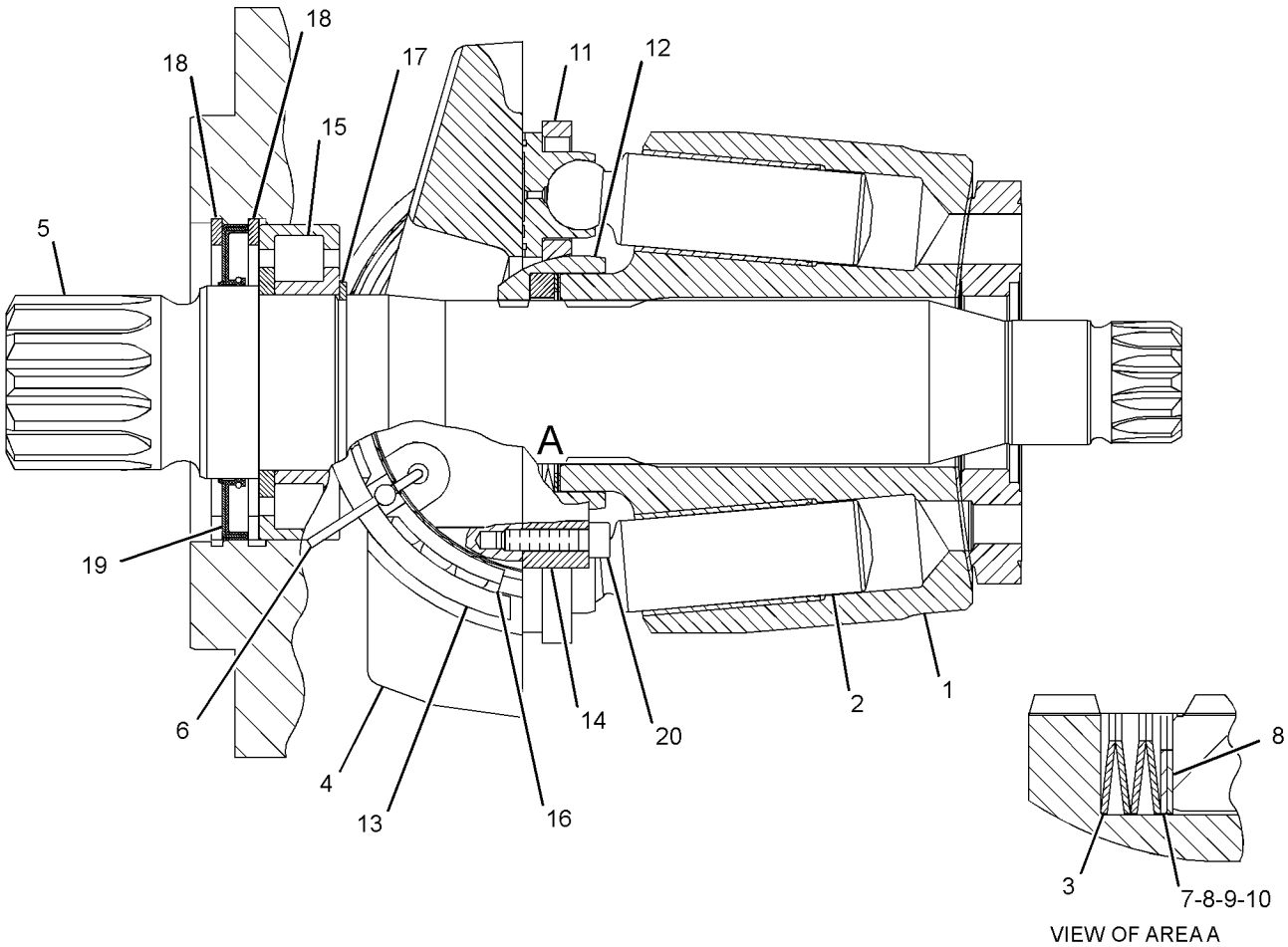

GRAPHIC #1 <END> g01387780

354-7130 STABILIZER AR—REAR

S/N: CH91-UP
PART OF 426-2551 UNDERCARRIAGE AR
AN ATTACHMENT

SMCS-7222 **i05922592**

NOTE	PART NUMBER	QTY	PART NAME 1 2 3 4 5 6 (PRODUCT LEVEL)	SEE PAGE
Y	**188-4991**	2	CYLINDER GP-STABILIZER	370
Y	*363-8926*	1	LINES GP-STABILIZER (REAR)	540
Y	*257-0384*	1	STABILIZER GP	745

Y - SEPARATE ILLUSTRATION

<END>

455-4597 STABILIZER AR

S/N: CH91-UP
PART OF 426-2550 UNDERCARRIAGE AR
AN ATTACHMENT

SMCS-7222 **i06251638**

NOTE	PART NUMBER	QTY	PART NAME 1 2 3 4 5 6 (PRODUCT LEVEL)	SEE PAGE
Y	**188-4991**	2	CYLINDER GP-STABILIZER	370
Y	*450-8372*	1	LINES GP-GREASE (FRONT AXLE PIVOT)	781
Y	*479-4267*	1	LINES GP-STABILIZER (FRONT)	544
			—OR—	
Y	*363-8923*	1	LINES GP-STABILIZER (FRONT)	537
Y	*257-0384*	1	STABILIZER GP	745

Y - SEPARATE ILLUSTRATION

<END>

250-9606 STEERING GP-HYDRAULIC

S/N: CH91-UP
PART OF 396-6835 OPERATOR AR
ALSO AN ATTACHMENT

SMCS-4303, 4304, 4312 **i05558151**

NOTE	REF NO	GRAPHIC REF	PART NUMBER	QTY	PART NAME 1 2 3 4 5 6 (PRODUCT LEVEL)	SEE PAGE
	1	1	**125-3249**	6	NUT-SPEED	
	2	1	**195-7873**	1	BRACKET	
	3	1	**227-6007**	1	STEERING WHEEL AS	
	4	1	**227-6009**	1	KNOB AS-STEERING	
	5	1	**241-2489**	1	CAP (COVER)	
	6	1	**243-4051**	1	COVER AS	
	7	1	**243-4052**	1	COVER	
	8	1	**243-4053**	1	COVER	
	9	1	**278-0964**	2	BRACKET AS	
Y	10	1	**354-6127**	1	STEERING COLUMN GP-ADJUSTABLE	881
	11	1	**282-0591**	2	CLAMP-BAND	
	12	1	**297-5131**	1	SWITCH AS-MULTIFUNCTION (HYDRAULIC STEERING)	
		1	**8T-8737**	1	PLUG-SEAL	
		1	**151-9275**	1	KIT-RECEPTACLE (6-PIN)	
		1	**160-3518**	1	KIT-RECEPTACLE (8-PIN)	
					(EACH RECEPTACLE KIT INCLUDES RECEPTACLE AS & WEDGE)	
		1	**8T-8729**	13	PIN-CONNECTOR (16-GA TO 20-GA)	
	13	1	**096-0061**	1	STRAP-CABLE	
M	14	1	**099-2374**	2	BOLT-SOCKET HEAD (M5X0.8X12-MM)	
	15	1	**125-6083**	6	SCREW-PAN HEAD	
M	16	1	**6V-8227**	1	NUT (M18X1.5-THD)	
M	17	1	**7Y-7388**	2	SCREW-BUTTON HEAD (M5X0.8X12-MM)	
	18	1	**8T-4121**	2	WASHER-HARD (11X21X2.5-MM THK)	
M	19	1	**8T-4136**	4	BOLT (M10X1.5X25-MM)	

M - METRIC PART
Y - SEPARATE ILLUSTRATION

250-9606 **STEERING GP-HYDRAULIC** (contd.) **i05558151**

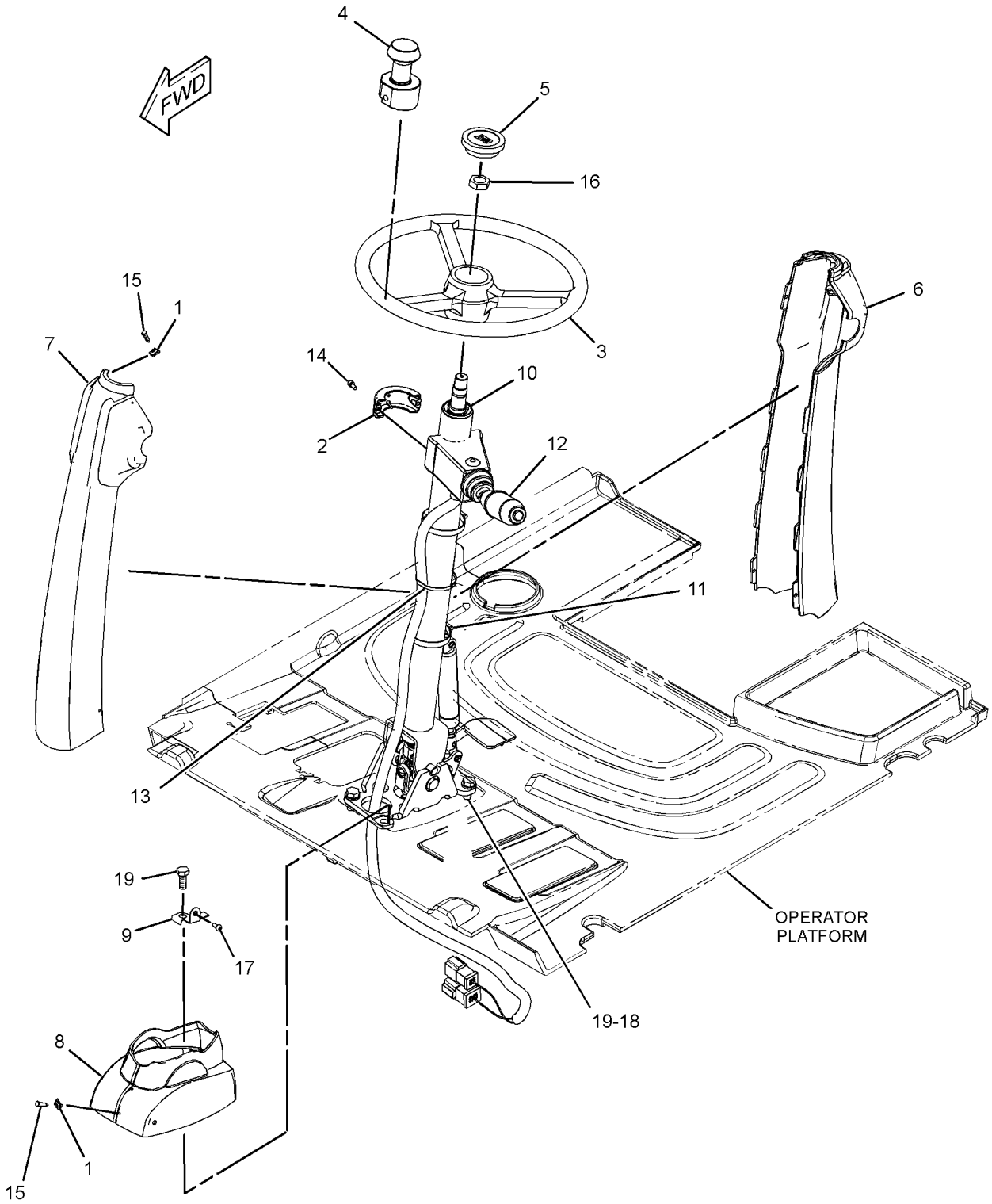

GRAPHIC #1 <END> g02731239

111-1896 SWIVEL & MOUNTING GP

S/N: CH91-UP
PART OF 354-7286 HYDRAULIC AR-LOWER
ALSO AN ATTACHMENT

SMCS-5060 **i05560730**

NOTE	REF NO	GRAPHIC REF	PART NUMBER	QTY	PART NAME 1 2 3 4 5 6 (PRODUCT LEVEL)	SEE PAGE
	1	1	**110-6628**	1	PLATE	
Y	2	1	**292-2769**	1	SWIVEL GP	610
	3	1	**8T-4223**	2	WASHER-HARD (13.5X25.5X3-MM THK)	
M	4	1	**8T-4956**	2	BOLT (M12X1.75X35-MM)	
	5	1	**7X-0591**	3	WASHER-HARD (17X29X3-MM THK)	
M	6	1	**7X-2552**	3	BOLT (M16X2X30-MM)	

M - METRIC PART
Y - SEPARATE ILLUSTRATION

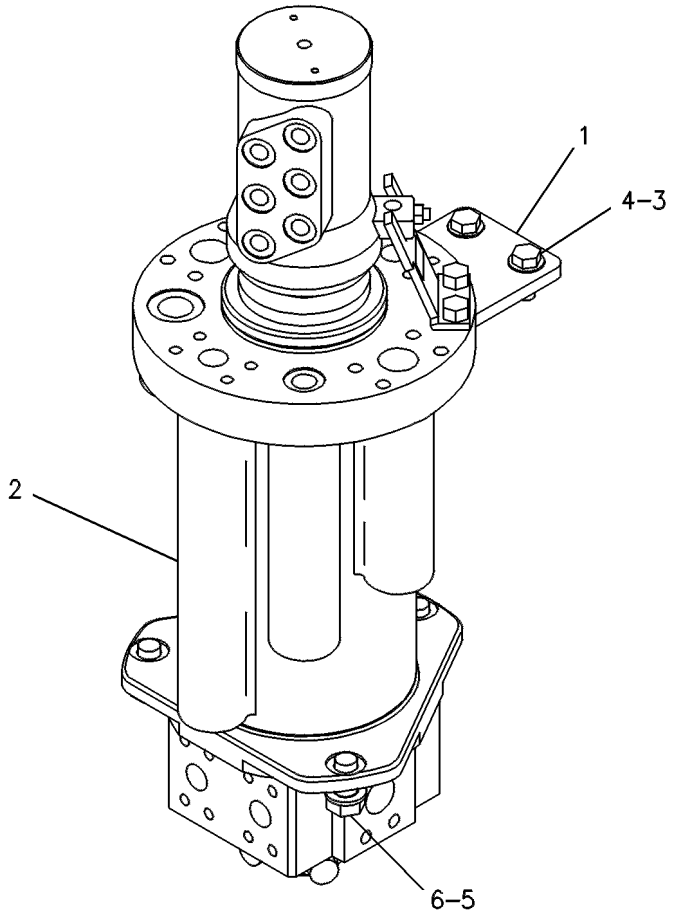

GRAPHIC #1 <END> g00244550

249-1278 SWIVEL GP

S/N: CH91-UP
PART OF 292-2769 SWIVEL GP
ALSO AN ATTACHMENT

SMCS-5060 **i05525372**

NOTE	REF NO	GRAPHIC REF	PART NUMBER	QTY	PART NAME 1 2 3 4 5 6 (PRODUCT LEVEL)	SEE PAGE
	1	1	**8U-9216**	2	PLUG GP-SWIVEL	
					(EACH INCLUDES)	
		1	**7T-0508**	1	SEAL-O-RING	
		1	**117-4874**	1	RING-SPLIT	
J	2	1	**8U-7965**	7	RING-SEAL	
	3	1	**250-1045**	1	HOUSING	
J	4	1	**250-1041**	1	SEAL-LIP TYPE	
	5	1	**2Y-5881**	3	LOCKWASHER	
M	6	1	**6V-5215**	3	BOLT (M8X1.25X16-MM)	
	7	1	**250-1044**	1	COVER	
J	8	1	**250-1042**	1	SEAL-LIP TYPE	
	9	1	**117-1755**	1	ROTOR	
	10	1	**8U-9215**	7	PLUG GP	
					(EACH INCLUDES)	
		1	**117-4875**	1	RING-SPLIT	
		1	**3E-4299**	1	SEAL-O-RING	
					AVAILABLE REPAIR KIT(S):	
J			**250-1047**	1	KIT-SEAL (SWIVEL)	

J - KIT MARKED J SERVICES PART(S) MARKED J
M - METRIC PART

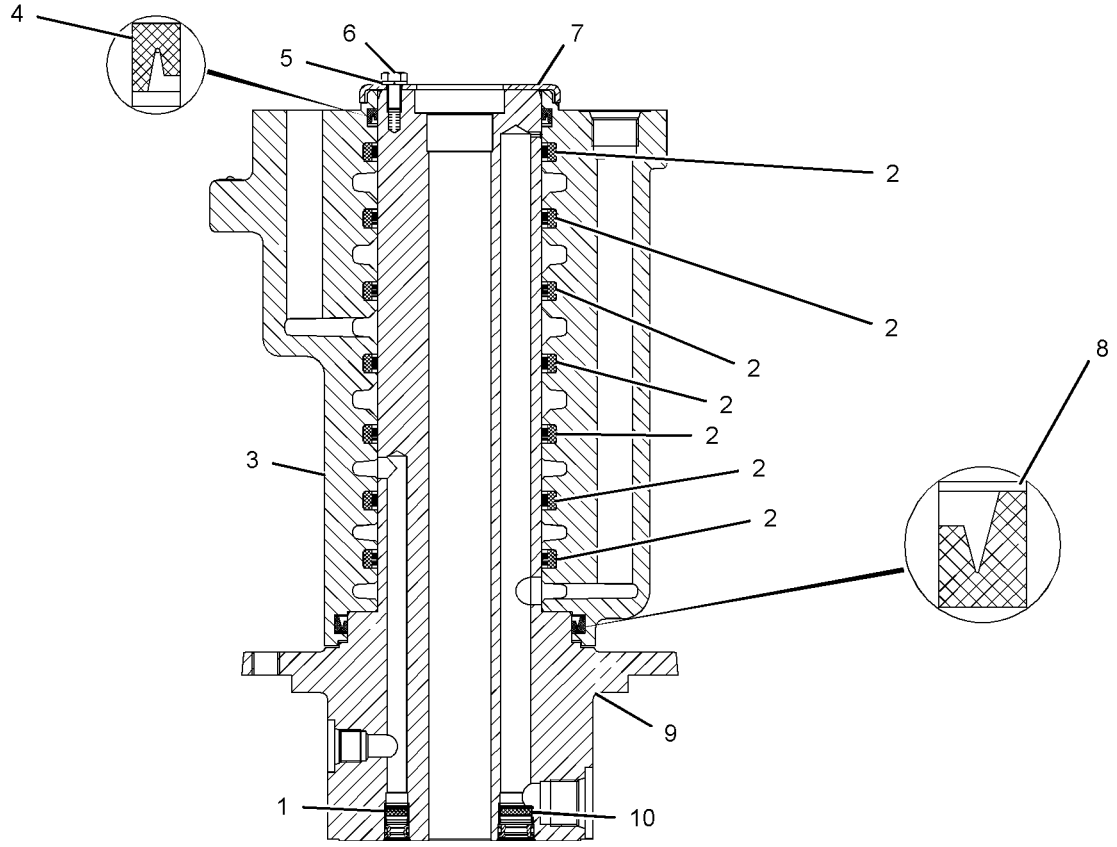

GRAPHIC #1 <END> g01083740

292-2769 SWIVEL GP

S/N: CH91-UP

PART OF 111-1896 SWIVEL & MOUNTING GP

ALSO AN ATTACHMENT

SMCS-5060 **i05525355**

NOTE	REF NO	GRAPHIC REF	PART NUMBER	QTY	PART NAME 1 2 3 4 5 6 (PRODUCT LEVEL)	SEE PAGE
Y	1	1	**249-1278**	1	SWIVEL GP	609
Y	2	1	**292-2770**	1	SWIVEL GP	611
	3	1	**5W-5095**	1	PLATE	
M	4	1	**6V-6317**	2	BOLT (M10X1.5X20-MM)	
	5	1	**113-0693**	2	LOCKWASHER (10.2X18.1X2.2-MM THK)	

M - METRIC PART
Y - SEPARATE ILLUSTRATION

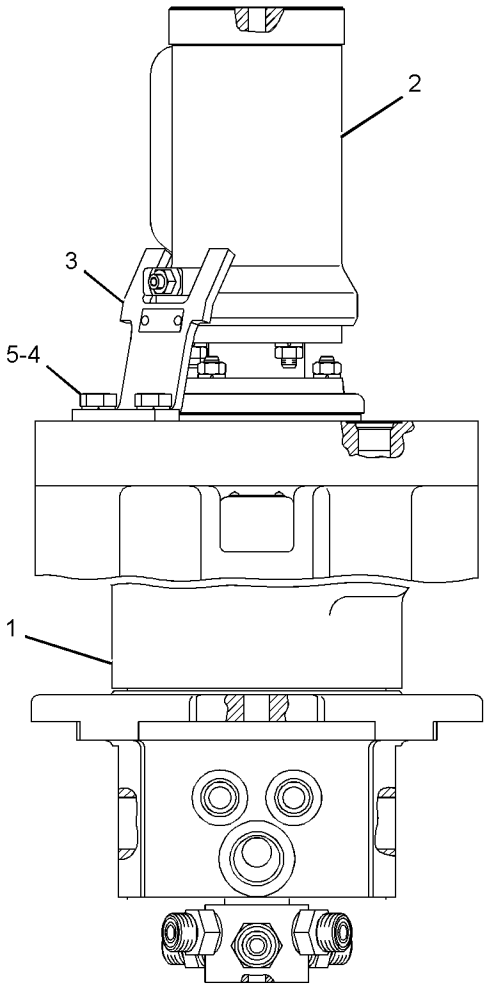

GRAPHIC #1 <END> g01273332

292-2770 SWIVEL GP

S/N: CH91-UP
PART OF 292-2769 SWIVEL GP
ALSO AN ATTACHMENT

SMCS-5060 **i05525374**

NOTE	REF NO	GRAPHIC REF	PART NUMBER	QTY	PART NAME 1 2 3 4 5 6 (PRODUCT LEVEL)	SEE PAGE
M	1	1	**8U-0767**	2	BOLT (M8X1.25X16-MM)	
	2	1	**8U-1366**	1	COVER	
	3	1	**8U-1368**	1	HOUSING	
	4	1	**8U-1369**	1	ROTOR	
M	5	1	**8T-2997**	1	SETSCREW-SOCKET (M8X1.25X20-MM)	
M	6	1	**5P-7970**	7	NUT (M8X1.25-THD)	
	7	1	**8U-1371**	6	PIN	
	8	1	**3B-4505**	6	LOCKWASHER (8.1X15.4X2-MM THK)	
	9	1	**8U-1372**	1	DISTRIBUTOR	
	10	1	**8U-1373**	1	COLLAR	
	11	1	**5W-5002**	1	PIN-GROOVED	
	12	1	**8U-1378**	6	FITTING	
	13	1	**292-2771**	1	KIT-SEAL (SWIVEL)	
					(INCLUDES RINGS, SEALS, SLIP RINGS & O-RING SEALS)	

M - METRIC PART

292-2770 **SWIVEL GP** (contd.) **i05525374**

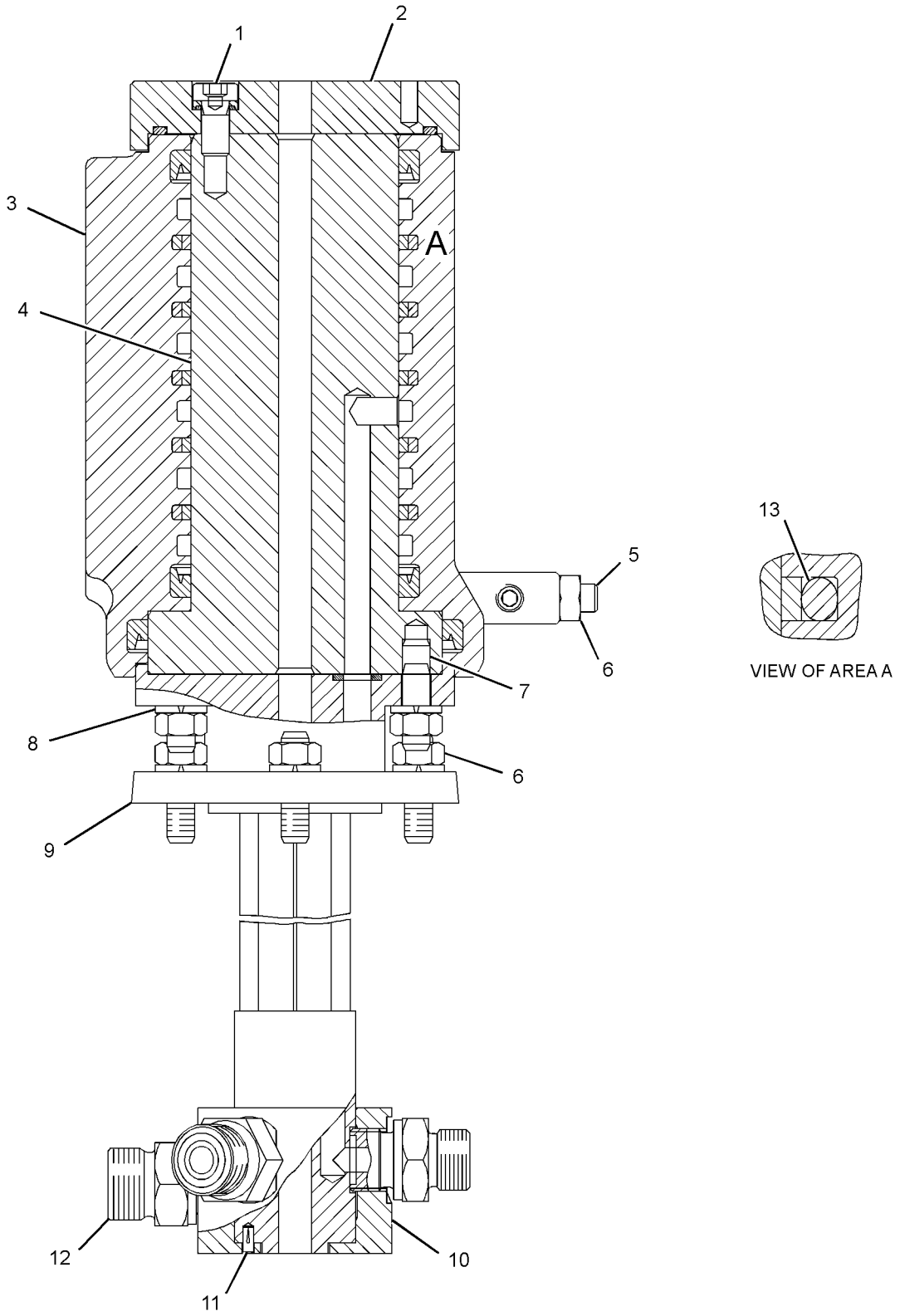

GRAPHIC #1 <END> g01273869

321-8800 TANK & MTG GP-HYDRAULIC

S/N: CH91-UP
PART OF 454-3395 HOOD & GUARD AR
ALSO AN ATTACHMENT

SMCS-5056 **i05946717**

NOTE	REF NO	GRAPHIC REF	PART NUMBER	QTY	PART NAME 1 2 3 4 5 6 (PRODUCT LEVEL)	SEE PAGE
M	1	1	**113-2003**	3	BOLT-SOCKET HEAD (M16X2X40-MM)	
Y	2	1	*321-8799*	1	TANK GP-HYDRAULIC	615

M - METRIC PART
Y - SEPARATE ILLUSTRATION

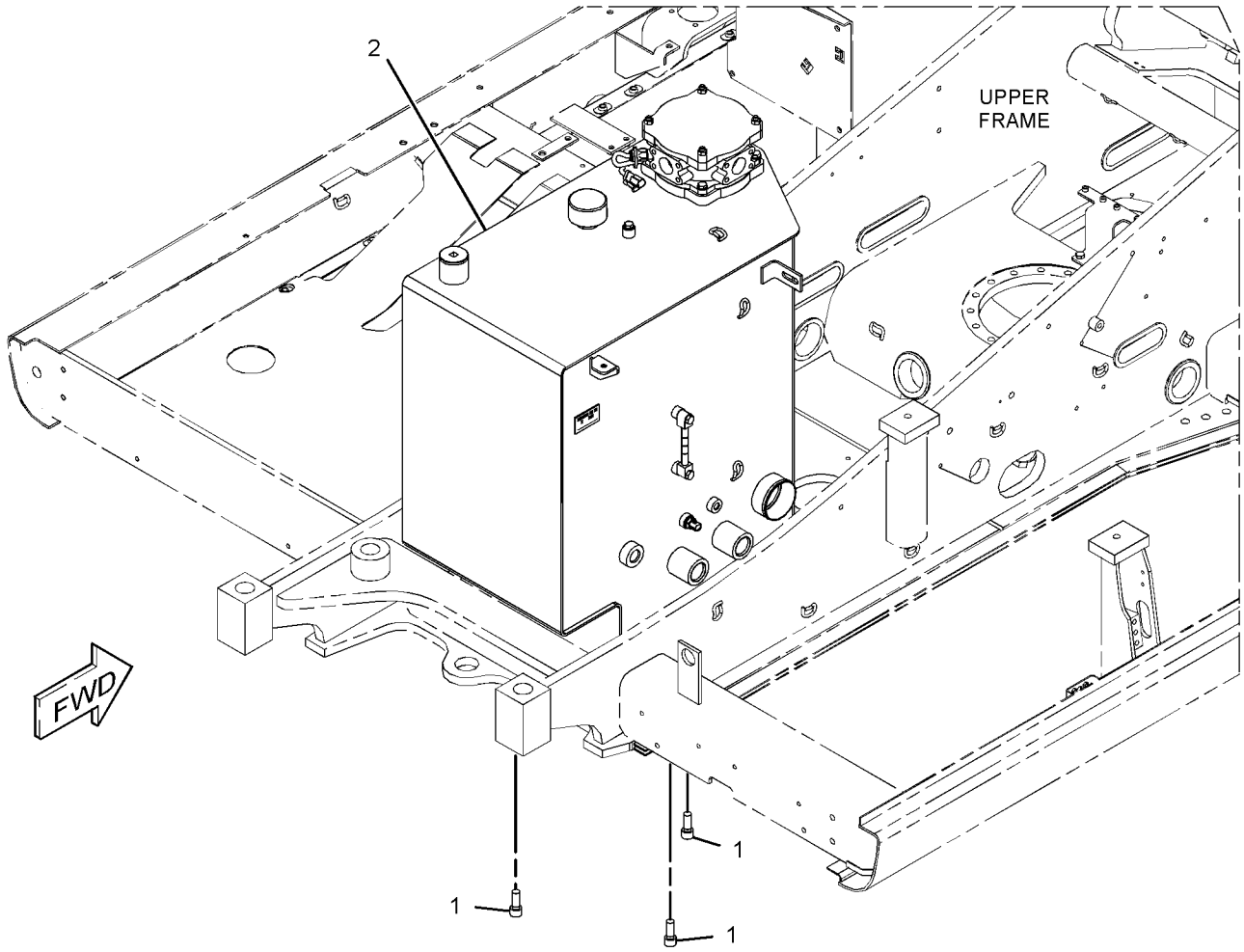

GRAPHIC #1 <END> g02415358

475-2048 TANK & MTG GP-HYDRAULIC

S/N: CH91-UP
443-LITER (117.03-US GAL)
PART OF 454-3395 HOOD & GUARD AR
ALSO AN ATTACHMENT

SMCS-5056 **i06755156**

NOTE	REF NO	GRAPHIC REF	PART NUMBER	QTY	PART NAME 1 2 3 4 5 6 (PRODUCT LEVEL)	SEE PAGE
M	1	1	**113-2003**	3	BOLT-SOCKET HEAD (M16X2X40-MM)	
Y	2	1	*475-2049*	1	TANK GP-HYDRAULIC	617

M - METRIC PART
Y - SEPARATE ILLUSTRATION

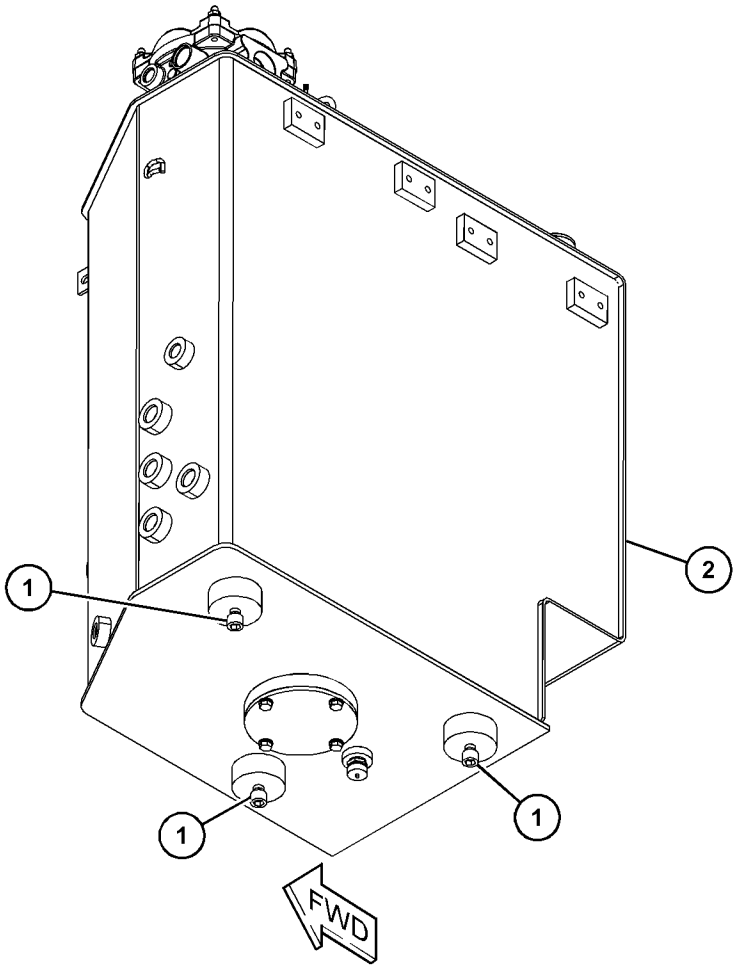

(VIEWED FROM BOTTOM)

GRAPHIC #1 <END> g06127019

321-8799 TANK GP-HYDRAULIC

S/N: CH91-UP
290-L (76.6-US GAL)
PART OF 321-8800 TANK & MTG GP-HYDRAULIC
ALSO AN ATTACHMENT

SMCS-5056, 5068, 7479 **i05946718**

NOTE	REF NO	GRAPHIC REF	PART NUMBER	QTY	PART NAME 1 2 3 4 5 6 (PRODUCT LEVEL)	SEE PAGE
	1	1	**5W-1696**	1	WASHER-SEALING (12.2X15.4X1.5-MM)	
	2	1	**096-6095**	1	PLUG	
	3	1	**101-4639**	1	PLUG AS-DRAIN (HYDRAULIC TANK)	
	4	1	**107-6738**	1	PLATE	
	5	1	**194-7849**	1	CAP AS (BREATHER) (HYDRAULIC TANK)	
		1	**245-1729**	1	CLIP	
Y	6	1	**236-2428**	1	GAUGE GP-SIGHT (HYDRAULIC OIL)	394
	7	1	**256-6454**	1	SENSOR-TEMPERATURE (2-PIN) (HYDRAULIC OIL)	
Y	8	1	**290-5479**	1	FILTER GP-OIL (HYDRAULIC)	387
	9	1	**321-8798**	1	TANK AS-HYDRAULIC	
	10	1	**337-5788**	1	SWITCH GP-PRESSURE (HYDRAULIC TANK, FILTER)	
		1	**9X-3401**	3	PIN-CONNECTOR (16-GA TO 18-GA)	
		1	**102-8803**	1	KIT-RECEPTACLE (3-PIN)	
					(INCLUDES RECEPTACLE AS & WEDGE)	
	11	1	**031-4392**	1	SEAL-O-RING	
	12	1	**095-1608**	1	SEAL-O-RING	
	13	1	*148-8408*	3	PLUG AS	
					(EACH INCLUDES)	
		1	**3D-2824**	1	SEAL-O-RING	
		1	**9S-4183**	1	PLUG (1-1/16-12-THD)	
	14	1	**2M-9780**	1	SEAL-O-RING	
	15	1	**3S-2093**	1	STRAP-CABLE	
M	16	1	**7X-2621**	1	BOLT (M10X1.5X12-MM)	
	17	1	**8T-4121**	9	WASHER-HARD (11X21X2.5-MM THK)	
M	18	1	**8T-4136**	4	BOLT (M10X1.5X25-MM)	
M	19	1	**8T-4137**	4	BOLT (M10X1.5X20-MM)	
	20	1	**8T-7524**	1	SEAL-O-RING	

M - METRIC PART
Y - SEPARATE ILLUSTRATION

321-8799 **TANK GP-HYDRAULIC** (contd.) **i05946718**

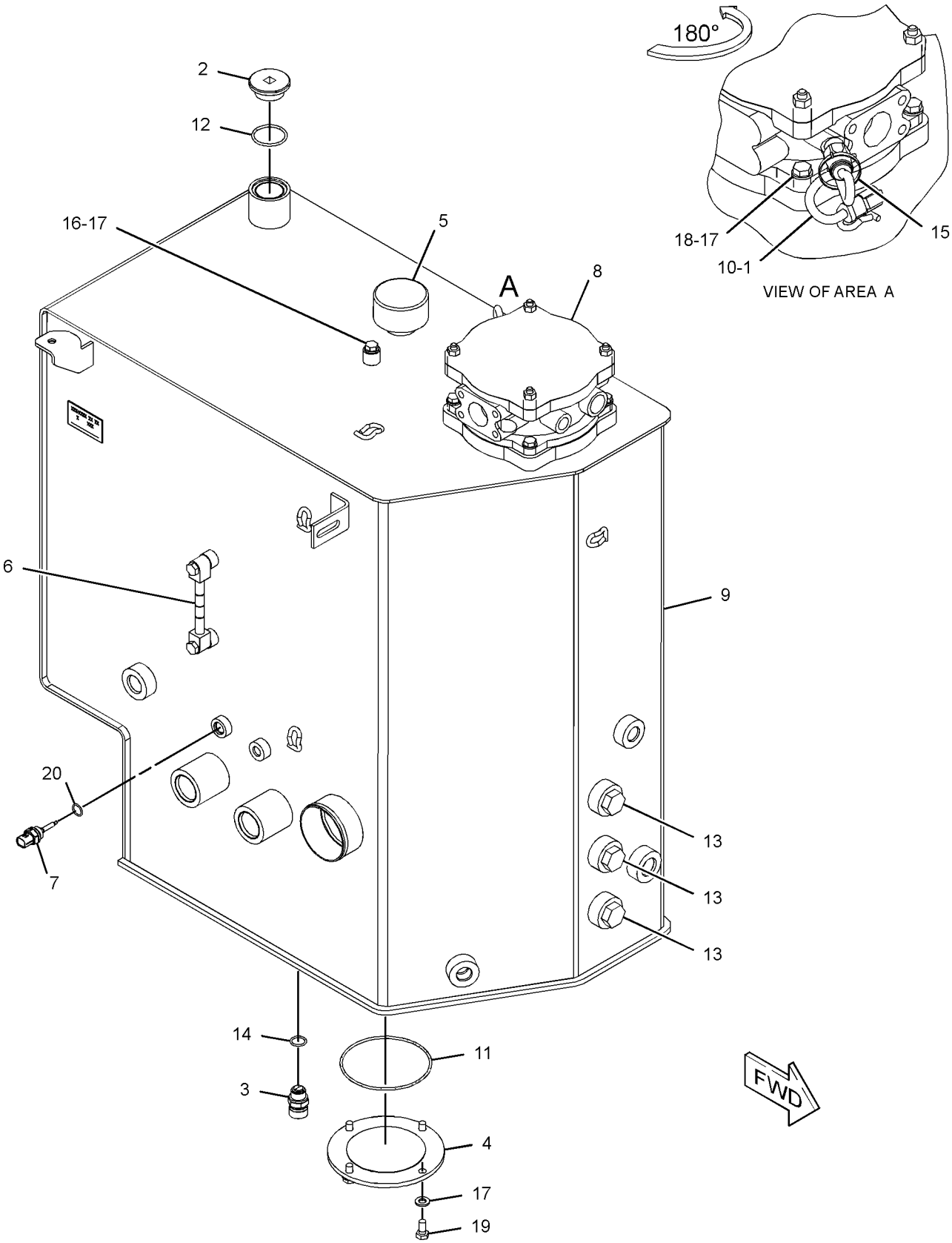

GRAPHIC #1 <END> g02415359

475-2049 TANK GP-HYDRAULIC

S/N: CH91-UP
443-LITER (117.01-US GAL)
PART OF 475-2048 TANK & MTG GP-HYDRAULIC
ALSO AN ATTACHMENT

SMCS-5056, 5068, 7479 **i06862350**

NOTE	REF NO	GRAPHIC REF	PART NUMBER	QTY	PART NAME 1 2 3 4 5 6 (PRODUCT LEVEL)	SEE PAGE
	1	1	**5W-1696**	1	WASHER-SEALING (12.2X15.4X1.5-MM)	
	2	1	**096-6095**	1	PLUG	
	3	1	**101-4639**	1	PLUG AS-DRAIN (HYDRAULIC TANK)	
	4	1	**107-6738**	1	PLATE	
Y	5	1	**236-2428**	1	GAUGE GP-SIGHT	394
	6	1	**256-6454**	1	SENSOR-TEMPERATURE (2-PIN)	
	7	1	**321-8798**	1	TANK AS-HYDRAULIC	
	8	1	**337-5788**	1	SWITCH GP-PRESSURE	
		1	**9X-3401**	3	PIN-CONNECTOR (16-GA TO 18-GA)	
		1	**102-8803**	1	KIT-RECEPTACLE (3-PIN)	
					(INCLUDES RECEPTACLE AS & WEDGE)	
	9	1	**432-6061**	1	BREATHER AS	
Y	10	1	**443-1358**	1	FILTER GP-OIL	388
	11	1	**031-4392**	1	SEAL-O-RING	
	12	1	**095-1608**	1	SEAL-O-RING	
	13	1	**2M-9780**	1	SEAL-O-RING	
M	14	1	**7X-2621**	1	BOLT (M10X1.5X12-MM)	
	15	1	**8T-4121**	9	WASHER-HARD (11X21X2.5-MM THK)	
M	16	1	**8T-4136**	4	BOLT (M10X1.5X25-MM)	
M	17	1	**8T-4137**	4	BOLT (M10X1.5X20-MM)	
	18	1	**8T-7524**	1	SEAL-O-RING	
B	19	1	**3S-2093**	1	STRAP-CABLE	

B - USE AS REQUIRED
M - METRIC PART
Y - SEPARATE ILLUSTRATION

475-2049 **TANK GP-HYDRAULIC** (contd.) **i06862350**

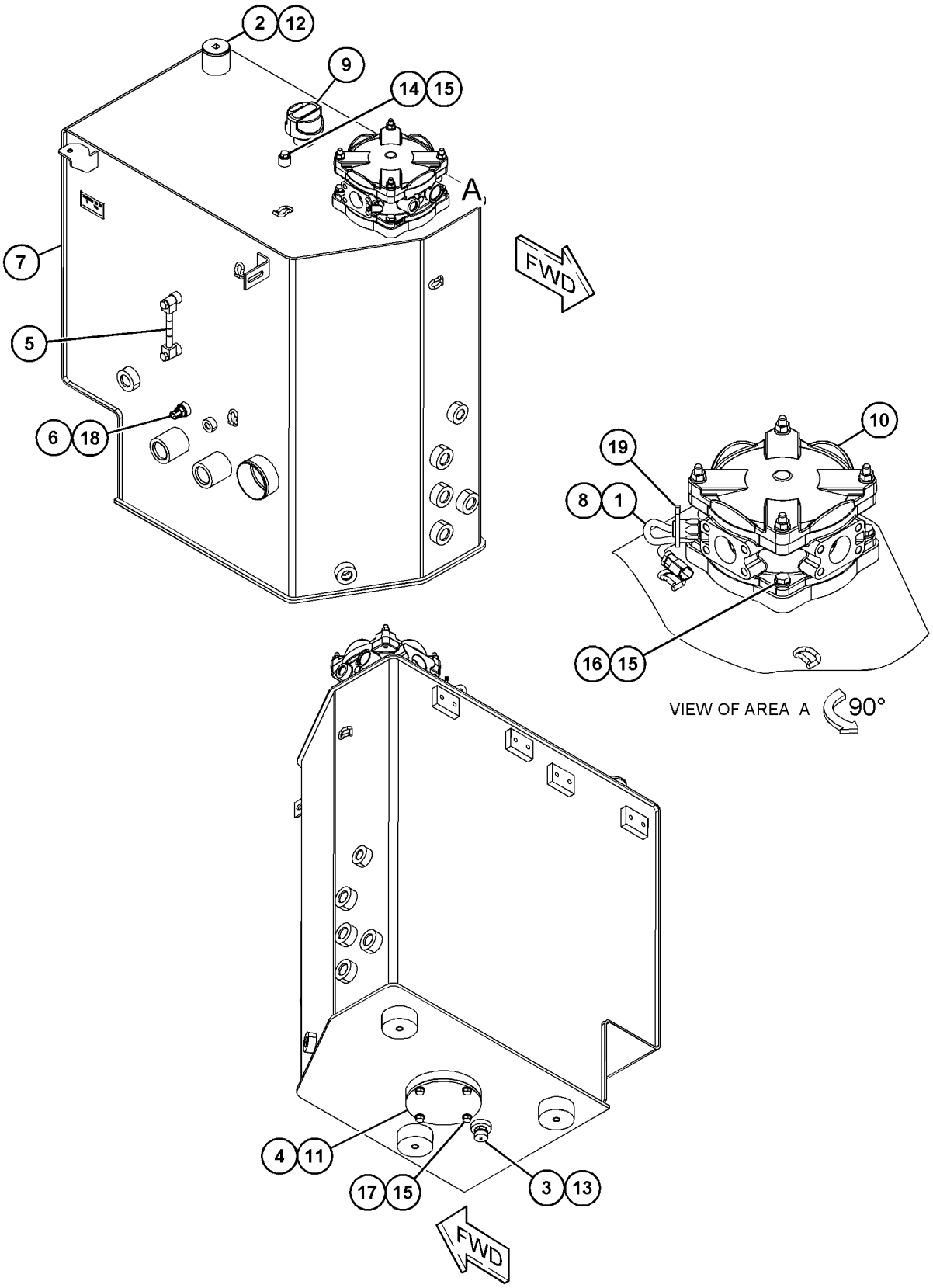

(VIEWED FROM BOTTOM)

GRAPHIC #1 <END> g06126517

425-3925 VALVE & LINES AR

S/N: CH91-UP
PART OF 453-8185, 473-2841, 517-3262 DISTRIBUTION AR
AN ATTACHMENT

SMCS-5057, 5067 **i06110830**

NOTE	PART NUMBER	QTY	PART NAME 1 2 3 4 5 6 (PRODUCT LEVEL)	SEE PAGE
Y	*185-3379*	1	LINES GP-BOOM CYLINDER	440
Y	*456-5832*	1	LINES GP-FRONT	475
Y	*472-3510*	1	PLUG GP-CONTROL VALVE	590
Y	*456-5834*	1	VALVE & LINES GP-CONTROL (STICK CYLINDER)	646
Y	*251-7921*	1	VALVE & LINES GP-CONTROL (BOOM CYLINDER)	642
Y	*418-1196*	1	VALVE & LINES GP-CONTROL (BUCKET CYLINDER)	644
Y	*300-2280*	1	WALKWAY GP	315

Y - SEPARATE ILLUSTRATION

<END>

425-9134 VALVE & LINES AR

S/N: CH91-UP
AN ATTACHMENT

SMCS-5057, 5067 **i06110829**

NOTE	PART NUMBER	QTY	PART NAME 1 2 3 4 5 6 (PRODUCT LEVEL)	SEE PAGE
Y	*456-5832*	1	LINES GP-FRONT	475
Y	*298-4409*	1	LINES GP-LOAD CONTROL VALVE (SMARTBOOM)	498
Y	*380-4720*	1	LINES GP-LOAD CONTROL VALVE (BOOM CYLINDER)	510
Y	*472-3500*	1	PLUG GP-CONTROL VALVE	589
Y	*340-3491*	1	VALVE & LINES GP-BOOM	633
Y	*456-5834*	1	VALVE & LINES GP-CONTROL (STICK CYLINDER)	646
Y	*418-1196*	1	VALVE & LINES GP-CONTROL (BUCKET CYLINDER)	644
Y	*392-7776*	1	WALKWAY GP	317

Y - SEPARATE ILLUSTRATION

<END>

446-2738 VALVE & LINES AR—VARIABLE ADJUSTABLE CYLINDER

S/N: CH91-UP
WITH RIDE CONTROL
AN ATTACHMENT

SMCS-5057, 5067 **i07694859**

NOTE	PART NUMBER	QTY	PART NAME 1 2 3 4 5 6 (PRODUCT LEVEL)	SEE PAGE
Y	*321-6697*	1	INDICATOR GP-POSITION (RIDE CONTROL, STUB BOOM)	732
Y	*321-6701*	1	INDICATOR GP-POSITION (RIDE CONTROL, FOREBOOM)	733
Y	*456-5832*	1	LINES GP-FRONT	475
Y	*340-3073*	1	LINES GP-LOAD CONTROL VALVE (BOOM CYLINDER)	506
Y	*274-5423*	1	LINES GP-PILOT (VA BOOM CYLINDER)	520
Y	*431-7217*	1	LINES GP-RIDE CONTROL (VARIABLE ADJUSTABLE BOOM)	535
Y	*472-3500*	1	PLUG GP-CONTROL VALVE	589
Y	*456-5833*	1	VALVE & LINES GP-BOOM (VARIABLE ADJUSTABLE CYLINDER)	638
Y	*456-5835*	1	VALVE & LINES GP-BOOM (DRIFT REDUCTION)	640
Y	*456-5834*	1	VALVE & LINES GP-CONTROL (STICK CYLINDER)	646
Y	*418-1196*	1	VALVE & LINES GP-CONTROL (BUCKET CYLINDER)	644
Y	*300-2280*	1	WALKWAY GP	315
Y	*337-5792*	1	WIRING GP-RIDE CONTROL	217

Y - SEPARATE ILLUSTRATION

<END>

446-2745 VALVE & LINES AR—VARIABLE ADJUSTABLE CYLINDER

S/N: CH91-UP
AN ATTACHMENT

SMCS-5057, 5067 **i06110833**

NOTE	PART NUMBER	QTY	PART NAME 1 2 3 4 5 6 (PRODUCT LEVEL)	SEE PAGE
Y	*185-3379*	1	LINES GP-BOOM CYLINDER	440
Y	*456-5832*	1	LINES GP-FRONT	475
Y	*274-5423*	1	LINES GP-PILOT (VA BOOM CYLINDER)	520
Y	*472-3510*	1	PLUG GP-CONTROL VALVE	590
Y	*456-5833*	1	VALVE & LINES GP-BOOM (VARIABLE ADJUSTABLE CYLINDER)	638
Y	*456-5835*	1	VALVE & LINES GP-BOOM (DRIFT REDUCTION)	640
Y	*456-5834*	1	VALVE & LINES GP-CONTROL (STICK CYLINDER)	646
Y	*251-7921*	1	VALVE & LINES GP-CONTROL (BOOM CYLINDER)	642
Y	*418-1196*	1	VALVE & LINES GP-CONTROL (BUCKET CYLINDER)	644
Y	*300-2280*	1	WALKWAY GP	315

Y - SEPARATE ILLUSTRATION

<END>

453-3004 VALVE & LINES AR—VARIABLE ADJUSTABLE CYLINDER

S/N: CH91-UP
AN ATTACHMENT

SMCS-5057, 5067 **i06068137**

NOTE	PART NUMBER	QTY	PART NAME 1 2 3 4 5 6 (PRODUCT LEVEL)	SEE PAGE
Y	*418-1194*	1	LINES GP-FRONT	474
Y	*340-3056*	1	LINES GP-LOAD CONTROL VALVE (BOOM CYLINDER)	502
Y	*274-5423*	1	LINES GP-PILOT (VA BOOM CYLINDER)	520
Y	*418-8587*	1	VALVE & LINES GP-BOOM	635
Y	*418-1196*	1	VALVE & LINES GP-CONTROL (BUCKET CYLINDER)	644
Y	*300-2280*	1	WALKWAY GP	315

Y - SEPARATE ILLUSTRATION

<END>

453-3005 VALVE & LINES AR—1-PIECE

S/N: CH91-UP
BOOM CYLINDER
AN ATTACHMENT

SMCS-5057, 5067 **i05935388**

NOTE	PART NUMBER	QTY	PART NAME 1 2 3 4 5 6 (PRODUCT LEVEL)	SEE PAGE
Y	*418-1194*	1	LINES GP-FRONT	474
Y	*340-3056*	1	LINES GP-LOAD CONTROL VALVE (BOOM CYLINDER)	502
Y	*340-3459*	1	PLUG GP (HYDRAULIC TANK)	588
Y	*418-1196*	1	VALVE & LINES GP-CONTROL (BUCKET CYLINDER)	644
Y	*300-2280*	1	WALKWAY GP	315

Y - SEPARATE ILLUSTRATION

<END>

454-2118 VALVE & LINES AR—1-PIECE, HIGH PRESSURE FLOW

S/N: CH91-UP
PART OF 453-8185, 473-2841, 517-3262 DISTRIBUTION AR
AN ATTACHMENT

SMCS-5057, 5067 **i07269787**

NOTE	PART NUMBER	QTY	PART NAME 1 2 3 4 5 6 (PRODUCT LEVEL)	SEE PAGE
Y	*418-0020*	1	LINES GP-AUXILIARY HYDRAULIC (1-PIECE, HIGH PRESSURE FLOW)	414
Y	*418-0023*	1	LINES GP-BOOM (1-PIECE)	426
			—OR—	
Y	*540-4003*	1	LINES GP-BOOM (1-PIECE)	438

Y - SEPARATE ILLUSTRATION

<END>

454-2122 VALVE & LINES AR—VARIABLE ADJ, HIGH PRESSURE

S/N: CH91-UP

AN ATTACHMENT

SMCS-5057, 5067 **i07269794**

NOTE	PART NUMBER	QTY	PART NAME 1 2 3 4 5 6 (PRODUCT LEVEL)	SEE PAGE
Y	*418-0910*	1	LINES GP-AUXILIARY HYDRAULIC (VARIABLE ADJ, HIGH PRESSURE)	416
Y	*418-0911*	1	LINES GP-BOOM (VARIABLE ADJUSTABLE)	430
			—OR—	
Y	*540-4002*	1	LINES GP-BOOM (VARIABLE ADJ, HIGH PRESSURE)	436

Y - SEPARATE ILLUSTRATION

<END>

454-2126 VALVE & LINES AR—VARIABLE ADJ, HIGH PRESSURE

S/N: CH91-UP

AN ATTACHMENT

SMCS-5057, 5067 **i05934946**

NOTE	PART NUMBER	QTY	PART NAME 1 2 3 4 5 6 (PRODUCT LEVEL)	SEE PAGE
Y	*418-0910*	1	LINES GP-AUXILIARY HYDRAULIC (VARIABLE ADJ, HIGH PRESSURE)	416
Y	*418-0912*	1	LINES GP-CHECK VALVE (STICK CYLINDER, VAR ADJ BOOM)	452

Y - SEPARATE ILLUSTRATION

<END>

454-2129 VALVE & LINES AR—1-PIECE, HIGH PRESSURE FLOW

S/N: CH91-UP

AN ATTACHMENT

SMCS-5057, 5067 **i07269811**

NOTE	PART NUMBER	QTY	PART NAME 1 2 3 4 5 6 (PRODUCT LEVEL)	SEE PAGE
Y	*418-0020*	1	LINES GP-AUXILIARY HYDRAULIC (1-PIECE, HIGH PRESSURE FLOW)	414
Y	*418-0024*	1	LINES GP-CHECK VALVE (STICK CYLINDER, 1-PIECE BOOM)	446
			—OR—	
Y	*540-4004*	1	LINES GP-CHECK VALVE (STICK CYLINDER, 1-PIECE BOOM)	460

Y - SEPARATE ILLUSTRATION

<END>

251-7932 VALVE & LINES AR-AUXILIARY—HAMMER

S/N: CH91-UP
PART OF 445-2355 HYDRAULIC AR
AN ATTACHMENT

SMCS-5051, 5057 **i05970837**

NOTE	REF NO	GRAPHIC REF	PART NUMBER	QTY	PART NAME 1 2 3 4 5 6 (PRODUCT LEVEL)	SEE PAGE
	1	1	**8U-0284**	2	FLANGE-HALF	
M	2	1	**101-7400**	4	BOLT-SOCKET HEAD (M10X1.5X110-MM)	
I	3	1	**113-0434**	1	HOSE AS	
	4	1	**118-8985**	2	NUT-CLAMP	
I	5	1	**133-2154**	1	HOSE AS	
Y	6	1	**252-5984**	1	VALVE GP-CONTROL (HYDRAULIC HAMMER)	663
	7	1	**330-4697**	1	TUBE AS	
	8	1	**118-8984**	1	CLAMP	
C	9	1	*148-8336*	1	CONNECTOR AS	
		1	**3J-1907**	1	SEAL-O-RING	
		1	**6V-8397**	1	SEAL-O-RING	
		1	**6V-8636**	1	CONNECTOR	
	10	1	*148-8433*	1	TEE AS	
		1	**6V-8397**	2	SEAL-O-RING	
		1	**6V-9836**	1	TEE-SWIVEL	
	11	1	**1P-4578**	2	FLANGE-HALF	
I	12	1	**311-9103**	1	HOSE AS	
	13	1	**4J-0520**	1	SEAL-O-RING	
	14	1	**4J-0522**	1	SEAL-O-RING	
	15	1	**4J-0524**	1	SEAL-O-RING	
	16	1	**5K-9090**	1	SEAL-O-RING	
	17	1	**8T-4121**	4	WASHER-HARD (11X21X2.5-MM THK)	
M	18	1	**8T-4183**	4	BOLT (M12X1.75X40-MM)	
M	19	1	**8T-4196**	4	BOLT (M10X1.5X35-MM)	
	20	1	**6V-8400**	1	SEAL-O-RING	
	21	1	**332-7918**	1	TUBE AS	
C	22	1	*150-4044*	1	CONNECTOR AS	
		1	**3J-1907**	1	SEAL-O-RING	
		1	**6V-8397**	1	SEAL-O-RING	
		1	**8T-1779**	1	CONNECTOR	

C - CHANGE FROM PREVIOUS TYPE
I - REFER TO HYDRAULIC INFORMATION SYSTEM
M - METRIC PART
Y - SEPARATE ILLUSTRATION

251-7932 **VALVE & LINES AR-AUXILIARY (**contd.**)** **i05970837**

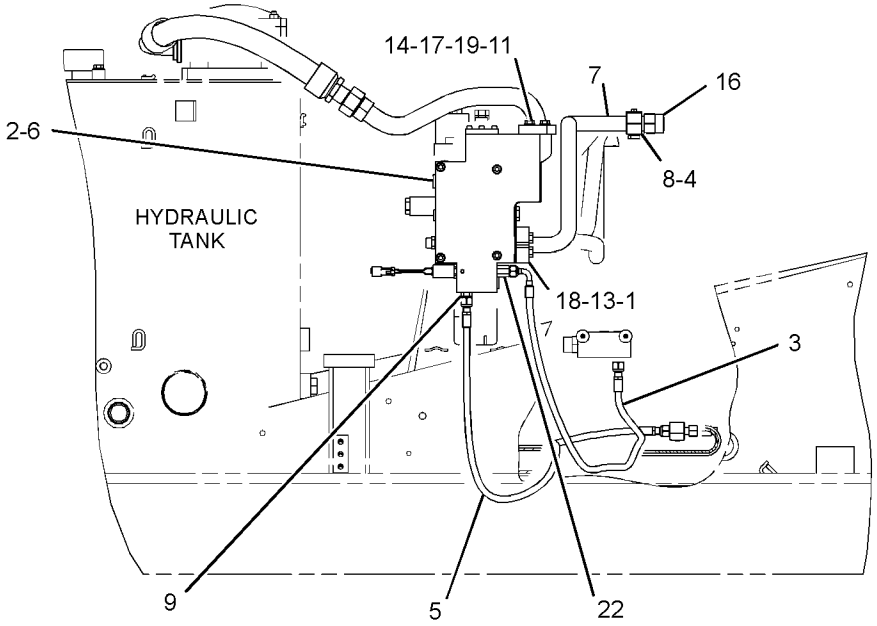

RIGHT SIDE VIEW

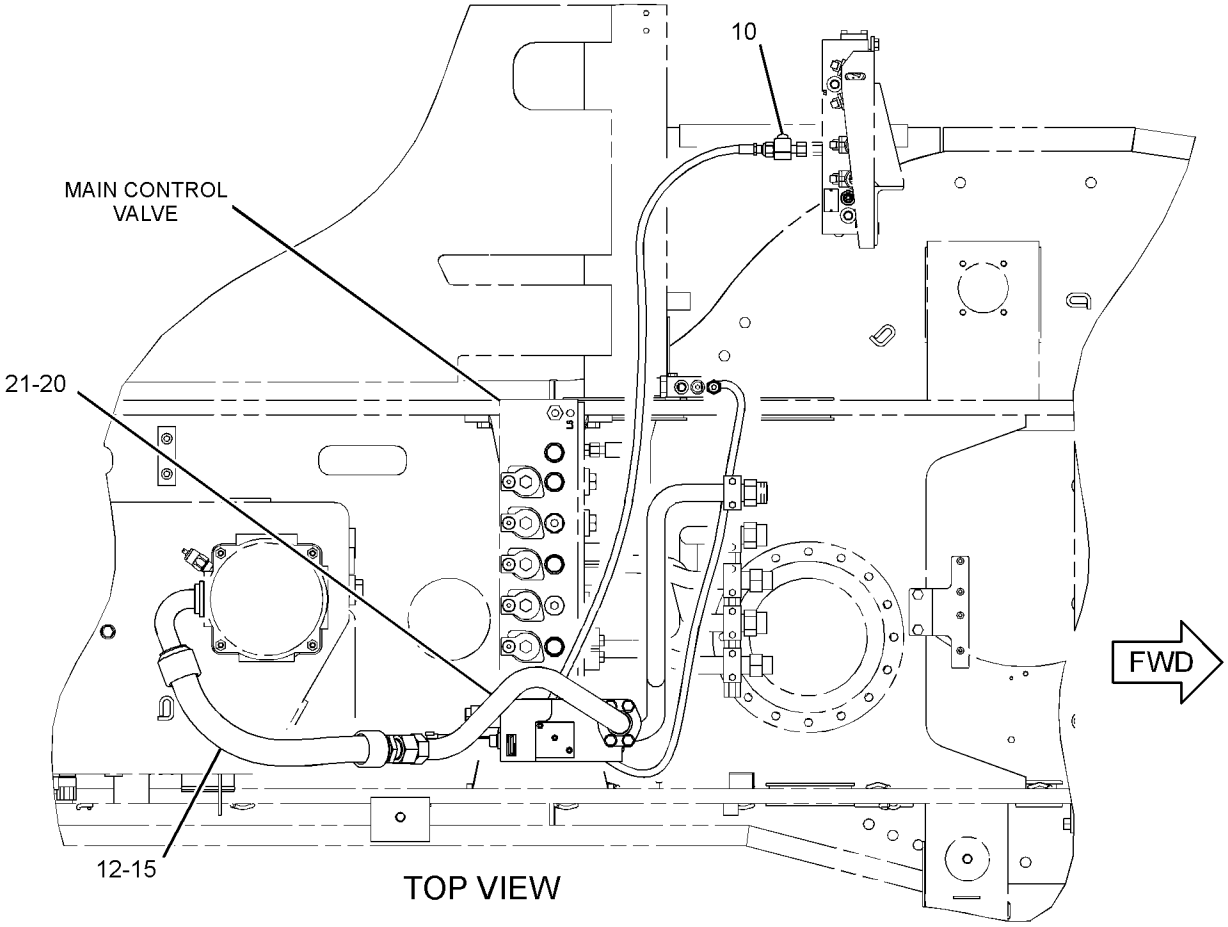

TOP VIEW

GRAPHIC #1 <END> g03375032

419-5484 VALVE & LINES AR-AUXILIARY—MULTIFUNCTION CONTROL VALVE

S/N: CH91-UP
ADVANCED TOOL
PART OF 420-9020 HYDRAULIC AR
AN ATTACHMENT

SMCS-5051, 5057

i05922212

NOTE	PART NUMBER	QTY	PART NAME 1 2 3 4 5 6 (PRODUCT LEVEL)	SEE PAGE
Y	*418-8739*	1	VALVE & LINES GP-AUXILIARY (DRIFT REDUCTION, AUXILIARY)	630
Y	*337-5784*	1	WIRING GP-WORK TOOL (MULTIFUNCTION COMBINED VALVE)	225

Y - SEPARATE ILLUSTRATION

<END>

340-3235 VALVE & LINES GP—QUICK COUPLER

S/N: CH91-UP

AN ATTACHMENT

SMCS-5051, 5057 **i06861633**

NOTE	REF NO	GRAPHIC REF	PART NUMBER	QTY	PART NAME 1 2 3 4 5 6 (PRODUCT LEVEL)	SEE PAGE
I	1	1	**113-0434**	1	HOSE AS	
	2	1	**211-6062**	1	VALVE GP-CHECK (QUICK COUPLER)	
		1	**3J-1907**	1	SEAL-O-RING	
		1	**6V-8397**	1	SEAL-O-RING	
I	3	1	**233-9615**	1	HOSE AS	
Y	4	1	**340-3327**	1	VALVE GP-CONTROL (QUICK COUPLER)	668
	5	1	*148-8336*	2	CONNECTOR AS	
					(EACH INCLUDES)	
		1	**3J-1907**	1	SEAL-O-RING	
		1	**6V-8397**	1	SEAL-O-RING	
		1	**6V-8636**	1	CONNECTOR	
	6	1	*148-8378*	2	ELBOW AS	
					(EACH INCLUDES)	
		1	**3J-1907**	1	SEAL-O-RING	
		1	**6V-8397**	1	SEAL-O-RING	
		1	**6V-8724**	1	ELBOW	
	7	1	*148-8433*	1	TEE AS	
					(EACH INCLUDES)	
		1	**6V-8397**	2	SEAL-O-RING	
		1	**6V-9836**	1	TEE-SWIVEL	
	8	1	*162-0177*	2	PLUG AS	
					(EACH INCLUDES)	
		1	**3J-1907**	1	SEAL-O-RING	
		1	**9S-8004**	1	PLUG (9/16-18-THD)	
	9	1	**198-4777**	2	WASHER-HARD (11X25X10-MM THK)	
M	10	1	**8T-3647**	2	BOLT (M8X1.25X80-MM)	
	11	1	**8T-4224**	2	WASHER-HARD (8.8X16X2-MM THK)	

I - REFER TO HYDRAULIC INFORMATION SYSTEM
M - METRIC PART
Y - SEPARATE ILLUSTRATION

340-3235 **VALVE & LINES GP (**contd.**)** **i06861633**

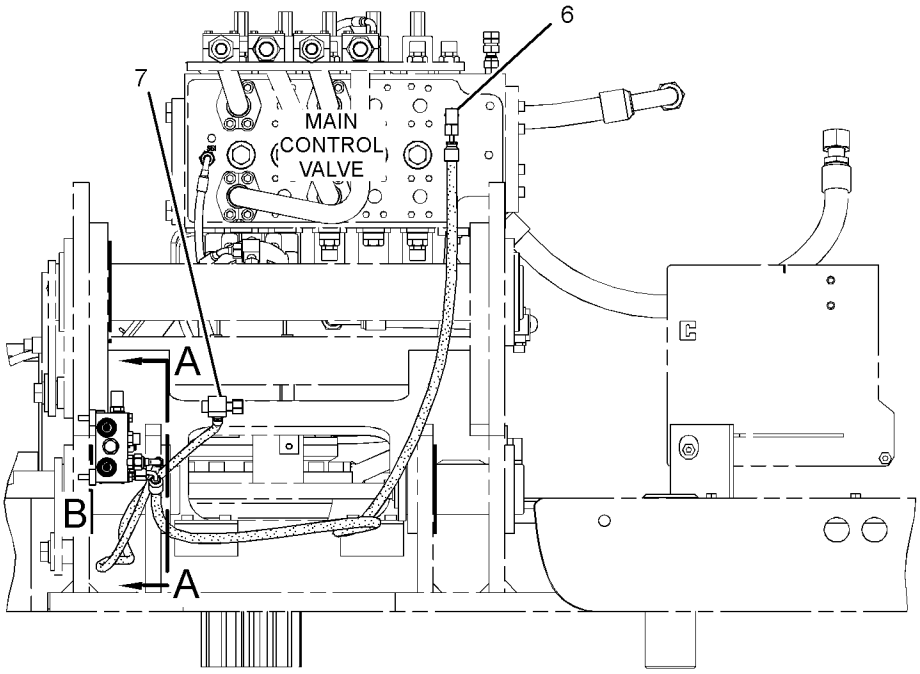

FRONT VIEW

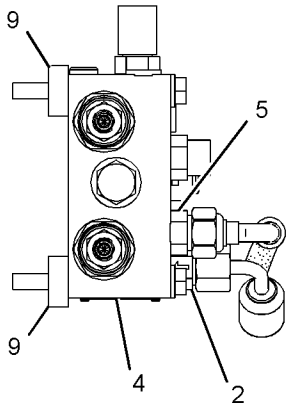

VIEW OF AREA B

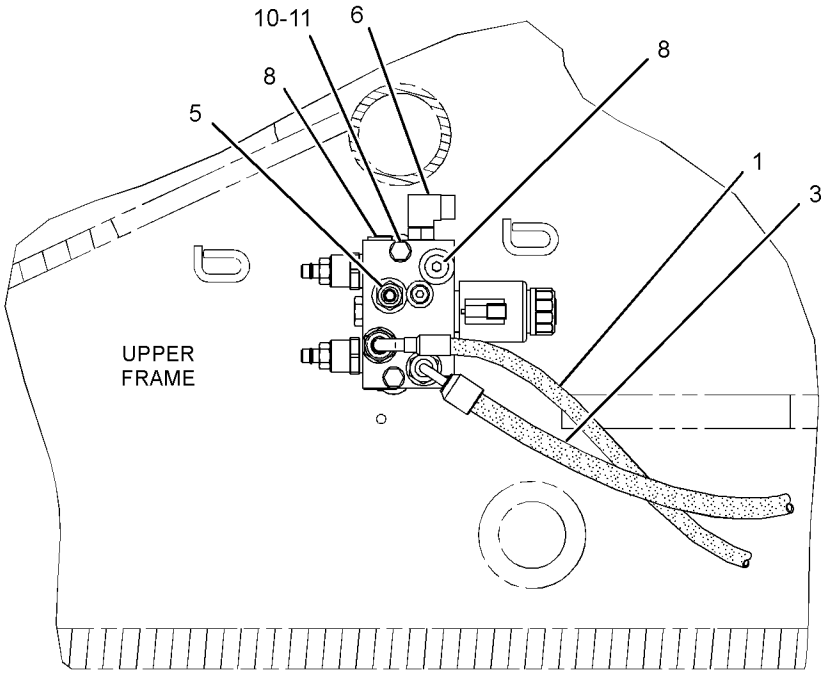

VIEW A-A

GRAPHIC #1 <END> g02397476

251-7942 VALVE & LINES GP-AUXILIARY

S/N: CH91-UP

PART OF 420-9020, 457-4857 HYDRAULIC AR

AN ATTACHMENT

SMCS-5051, 5057 **i05915847**

NOTE	REF NO	GRAPHIC REF	PART NUMBER	QTY	PART NAME 1 2 3 4 5 6 (PRODUCT LEVEL)	SEE PAGE
I	1	1	**141-7742**	1	HOSE AS	
I	2	1	**199-7479**	1	HOSE AS	
Y	3	1	**307-2789**	1	VALVE & MTG GP-SOLENOID (MEDIUM PRESSURE, AUXILIARY)	652
	4	1	*148-8372*	1	ELBOW AS	
		1	**2M-9780**	1	SEAL-O-RING	
		1	**6V-8398**	1	SEAL-O-RING	
		1	**6V-8721**	1	ELBOW	
F		1	**266-0556**	1	FILM-INFORMATION (OPERATOR CONTROLS, READ OMM)	
					LOCATE INSIDE CAB ON THE RH CAB WINDOW	

F - NOT SHOWN
I - REFER TO HYDRAULIC INFORMATION SYSTEM
Y - SEPARATE ILLUSTRATION

251-7942 **VALVE & LINES GP-AUXILIARY (**contd.**)** **i05915847**

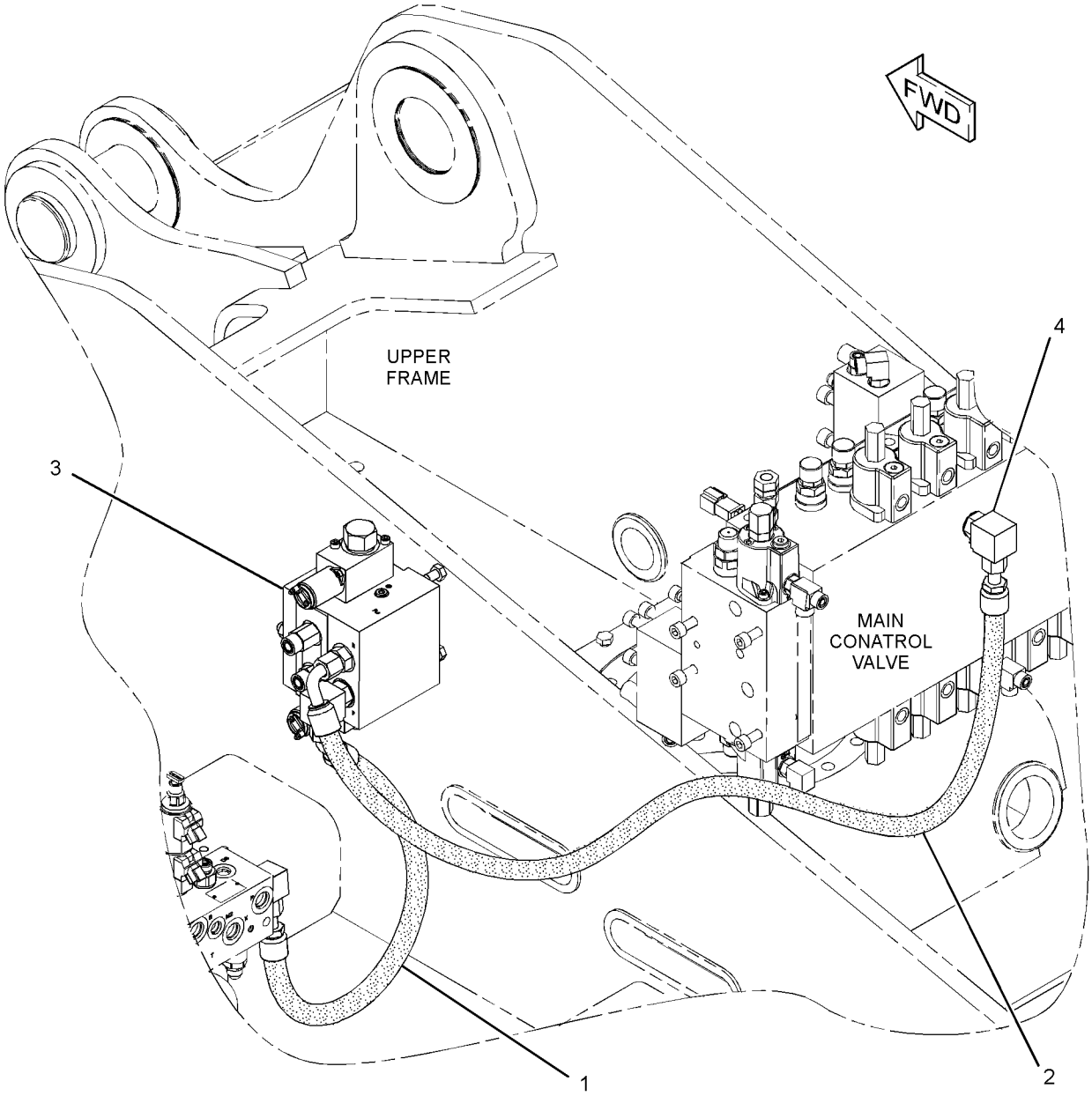

GRAPHIC #1 <END> g01360109

418-8739 VALVE & LINES GP-AUXILIARY—DRIFT REDUCTION

S/N: CH91-UP

PART OF 419-5484 VALVE & LINES AR-AUXILIARY

AN ATTACHMENT

SMCS-5051, 5057 **i06861632**

NOTE	REF NO	GRAPHIC REF	PART NUMBER	QTY	PART NAME 1 2 3 4 5 6 (PRODUCT LEVEL)	SEE PAGE
I	1	2	**113-0434**	1	HOSE AS	
I	2	2	**113-0454**	1	HOSE AS	
	3	2	**118-8985**	2	NUT-CLAMP	
I	4	2	**129-4682**	1	HOSE AS	
I	5	2	**133-2154**	1	HOSE AS	
I	6	2	**138-1898**	1	HOSE AS	
	7	2	**205-2453**	1	FLANGE	
I	8	2	**245-3868**	1	HOSE AS	
Y	9	2	**254-0488**	1	VALVE GP-CHECK (PILOT OPERATED)	656
I	10	2	**311-9103**	1	HOSE AS	
	11	2	**316-8231**	2	BOLT-SOCKET HEAD (M12X1.75X185-MM)	
	12	2	**329-2400**	1	TUBE AS	
	13	2	**332-7918**	1	TUBE AS	
Y	14	2	**358-9923**	1	VALVE GP-COMBINATION (MULTIFUNCTION)	658
M	15	2	**101-7400**	4	BOLT-SOCKET HEAD (M10X1.5X110-MM)	
M	16	2	**105-3489**	2	BOLT-SOCKET HEAD (M12X1.75X80-MM)	
	17	2	**118-8984**	1	CLAMP	
	18	2	*148-8336*	4	CONNECTOR AS	
					(EACH INCLUDES)	
		2	**3J-1907**	1	SEAL-O-RING	
		2	**6V-8397**	1	SEAL-O-RING	
		2	**6V-8636**	1	CONNECTOR	
	19	2	*148-8378*	1	ELBOW AS	
		2	**3J-1907**	1	SEAL-O-RING	
		2	**6V-8397**	1	SEAL-O-RING	
		2	**6V-8724**	1	ELBOW	
	20	2	*148-8433*	3	TEE AS	
					(EACH INCLUDES)	
		2	**6V-8397**	2	SEAL-O-RING	
		2	**6V-9836**	1	TEE-SWIVEL	
	21	2	*148-8435*	1	TEE AS	
		2	**3J-1907**	1	SEAL-O-RING	
		2	**6V-8397**	2	SEAL-O-RING	
		2	**6V-8781**	1	TEE	
	22	2	*150-4044*	1	CONNECTOR AS	
		2	**3J-1907**	1	SEAL-O-RING	
		2	**6V-8397**	1	SEAL-O-RING	
		2	**8T-1779**	1	CONNECTOR	
	23	2	*153-6249*	1	CONNECTOR AS	
		2	**3J-1907**	1	SEAL-O-RING	
		2	**6V-8397**	1	SEAL-O-RING	
		2	**8T-8887**	1	CONNECTOR	
	24	2	**1P-4578**	2	FLANGE-HALF	
M	25	2	**297-5862**	2	BOLT-SOCKET HEAD (M12X1.75X110-MM)	
	26	2	**4J-0520**	3	SEAL-O-RING	
	27	2	**4J-0522**	1	SEAL-O-RING	
	28	2	**4J-0524**	1	SEAL-O-RING	

418-8739 **VALVE & LINES GP-AUXILIARY (**contd.**)** **i06861632**

NOTE	REF NO	GRAPHIC REF	PART NUMBER	QTY	PART NAME 1 2 3 4 5 6 (PRODUCT LEVEL)	SEE PAGE
	29	2	**5K-9090**	1	SEAL-O-RING	
	30	2	**6V-8400**	1	SEAL-O-RING	
	31	2	**8T-4121**	4	WASHER-HARD (11X21X2.5-MM THK)	
M	32	2	**8T-4196**	4	BOLT (M10X1.5X35-MM)	

I - REFER TO HYDRAULIC INFORMATION SYSTEM
M - METRIC PART
Y - SEPARATE ILLUSTRATION

REFER TO ALL ILLUSTRATIONS OF THIS GROUP FOR AUXILIARY VIEWS

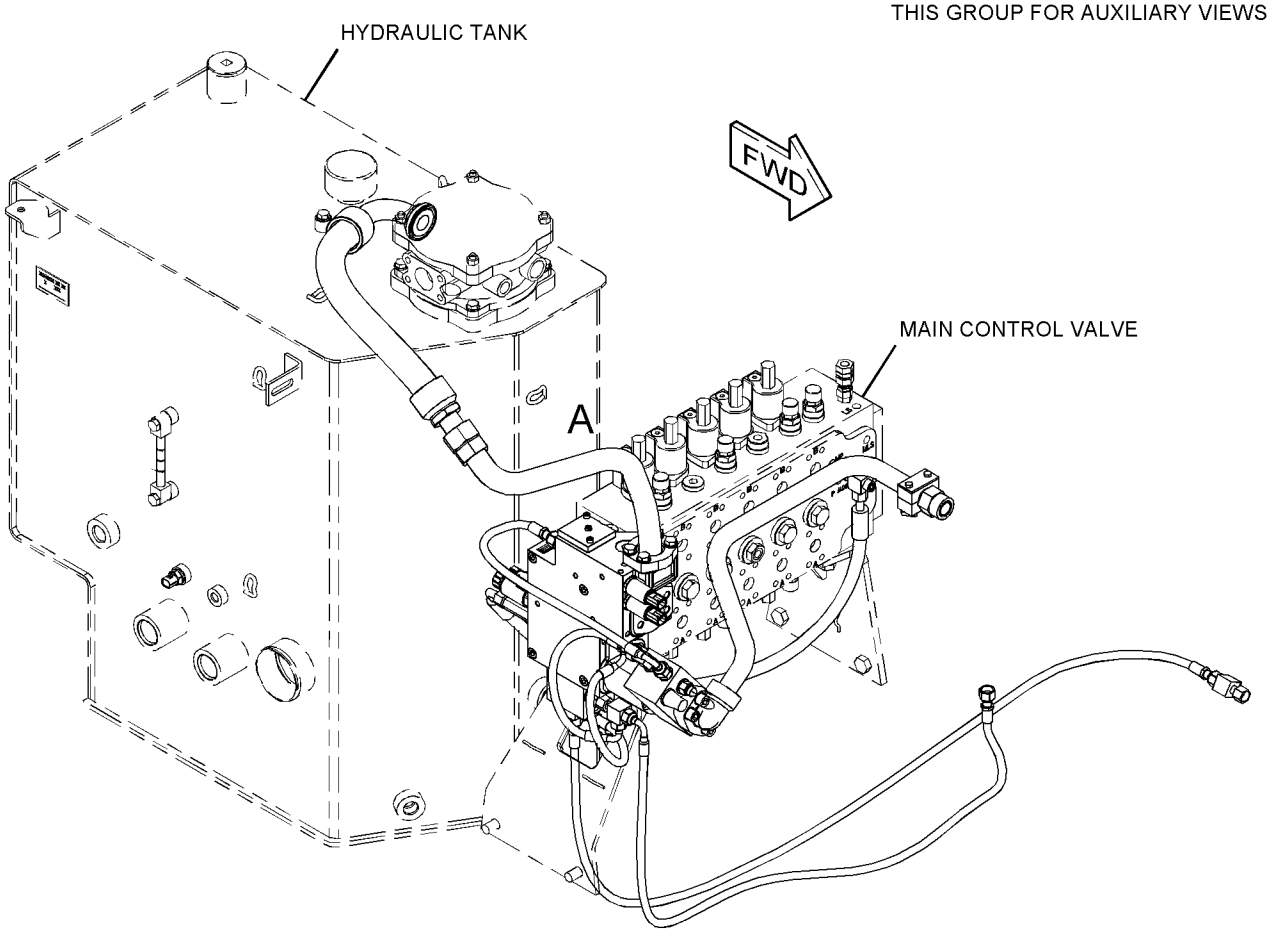

GRAPHIC #1 g03572396

418-8739 **VALVE & LINES GP-AUXILIARY** (contd.) **i06861632**

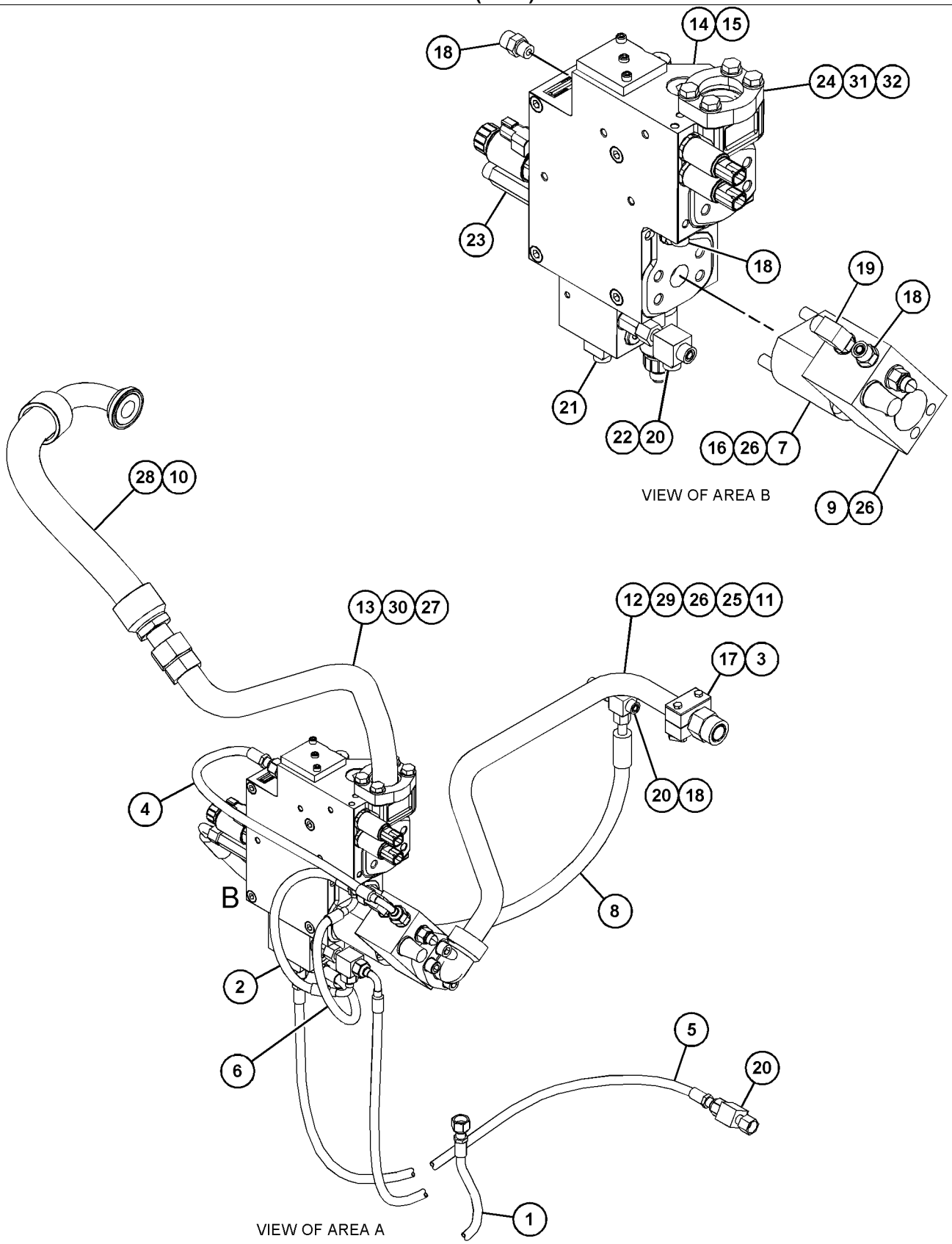

GRAPHIC #2 <END> g03572398

340-3491 VALVE & LINES GP-BOOM

S/N: CH91-UP

PART OF 425-9134 VALVE & LINES AR

AN ATTACHMENT

SMCS-5051, 5057 **i05934572**

NOTE	REF NO	GRAPHIC REF	PART NUMBER	QTY	PART NAME 1 2 3 4 5 6 (PRODUCT LEVEL)	SEE PAGE
I	1	1	**138-7948**	1	HOSE AS	
I	2	1	**140-1250**	1	HOSE AS	
I	3	1	**140-7583**	1	HOSE AS	
	4	1	*148-8424*	1	TEE AS	
		1	**6V-8397**	1	SEAL-O-RING	
		1	**8T-8902**	1	ADAPTER-TEE	
	5	1	**162-1415**	1	HOSE AS	
	6	1	*164-5629*	1	FITTING AS	
		1	**3J-1907**	1	SEAL-O-RING	
		1	**108-7516**	1	FITTING	
	7	1	**247-3222**	1	HOSE AS	
Y	8	1	**265-7156**	1	VALVE GP-SOLENOID (SMARTBOOM, BOOM LOAD CONTROL)	710
	9	1	**265-7163**	2	VALVE AS-CHECK	
					(EACH INCLUDES)	
		1	**114-2943**	1	KIT-SEAL (MAIN CONTROL VALVE PLUGS)	
					(INCLUDES BACKUP RINGS & O-RING SEALS)	
	10	1	**287-7334**	1	FLANGE	
	11	1	**309-5769**	1	SWITCH AS-PRESSURE	
		1	**102-8802**	1	KIT-RECEPTACLE (2-PIN)	
		1	**151-9272**	1	KIT-RECEPTACLE (2-PIN)	
					(EACH RECEPTACLE KIT INCLUDES RECEPTACLE AS & WEDGE)	
		1	**126-1767**	2	PIN-CONNECTOR (14-GA TO 16-GA)	
	12	1	**349-1178**	1	SENSOR-PRESSURE (OVERLOAD WARNING)	
	13	1	*148-8336*	6	CONNECTOR AS	
					(EACH INCLUDES)	
		1	**3J-1907**	1	SEAL-O-RING	
		1	**6V-8397**	1	SEAL-O-RING	
		1	**6V-8636**	1	CONNECTOR	
	14	1	*148-8378*	2	ELBOW AS	
					(EACH INCLUDES)	
		1	**3J-1907**	1	SEAL-O-RING	
		1	**6V-8397**	1	SEAL-O-RING	
		1	**6V-8724**	1	ELBOW	
	15	1	*148-8435*	1	TEE AS	
		1	**3J-1907**	1	SEAL-O-RING	
		1	**6V-8397**	2	SEAL-O-RING	
		1	**6V-8781**	1	TEE	
	16	1	**1P-3703**	1	SEAL-RECTANGULAR	
	17	1	**3J-1907**	1	SEAL-O-RING	
	18	1	**3S-2093**	2	STRAP-CABLE	
M	19	1	**5C-7261**	2	NUT (M8X1.25-THD)	
	20	1	**7X-0613**	2	WASHER-HARD (8.8X25.5X5-MM THK)	
M	21	1	**8T-6870**	2	BOLT (M8X1.25X70-MM)	
	22	1	**236-0562**	1	FILM-IDENTIFICATION (SMARTBOOM)	

I - REFER TO HYDRAULIC INFORMATION SYSTEM
M - METRIC PART
Y - SEPARATE ILLUSTRATION

340-3491 **VALVE & LINES GP-BOOM (**contd.**)** **i05934572**

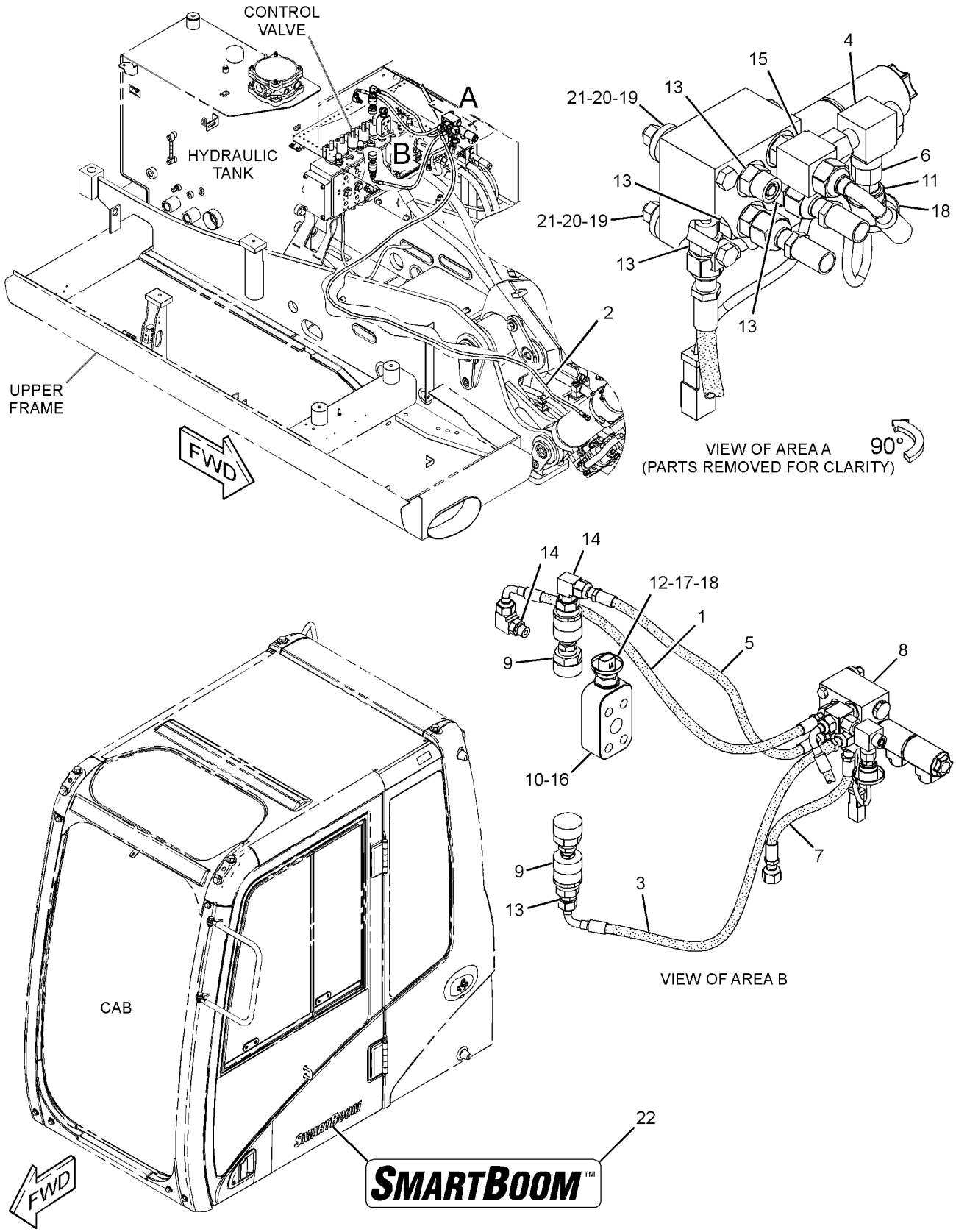

GRAPHIC #1 <END> g03066877

418-8587 VALVE & LINES GP-BOOM—VARIABLE ADJUSTABLE BOOM CYLINDER

S/N: CH91-UP

PART OF 453-3004 VALVE & LINES AR

AN ATTACHMENT

SMCS-5051, 5057 **i06861631**

NOTE	REF NO	GRAPHIC REF	PART NUMBER	QTY	PART NAME 1 2 3 4 5 6 (PRODUCT LEVEL)	SEE PAGE
	1	1	**5W-9857**	6	FLANGE-HALF	
	2	1	**116-7286**	2	CLAMP-SINGLE	
	3	1	**118-8985**	4	NUT-CLAMP	
	4	1	**130-1152**	1	HOSE AS	
	5	1	**135-4990**	1	CLAMP-SINGLE	
	6	1	**138-9358**	1	HOSE AS	
	7	1	**151-8866**	1	ELBOW	
	8	1	**189-2059**	1	PLATE AS	
I	9	1	**190-8552**	1	HOSE AS	
	10	1	*194-9396*	1	CLAMP GP-HYDRAULIC LINES	
		1	**194-9394**	2	CLAMP	
		1	**194-9395**	1	PLATE	
Y	11	1	**251-8038**	1	VALVE GP-CONTROL (BOOM) (VA BOOM)	661
	12	1	**330-4702**	1	TUBE AS	
	13	1	**330-4703**	1	TUBE AS	
	14	1	**340-3125**	1	TUBE AS	
I	15	1	**340-3126**	1	HOSE AS	
	16	1	**340-3470**	1	VALVE GP-CHECK (PILOT OPERATED)	
		1	**4J-5267**	1	SEAL-O-RING	
M	17	1	**101-7398**	8	BOLT-SOCKET HEAD (M10X1.5X40-MM)	
M	18	1	**108-4282**	4	BOLT-SOCKET HEAD (M10X1.5X100-MM)	
	19	1	*148-8336*	1	CONNECTOR AS	
		1	**3J-1907**	1	SEAL-O-RING	
		1	**6V-8397**	1	SEAL-O-RING	
		1	**6V-8636**	1	CONNECTOR	
	20	1	*148-8341*	1	CONNECTOR AS	
		1	**3D-2824**	1	SEAL-O-RING	
		1	**6V-8713**	1	CONNECTOR	
		1	**7J-9108**	1	SEAL-O-RING	
	21	1	*148-8367*	1	ELBOW AS	
		1	**6V-8397**	1	SEAL-O-RING	
		1	**6V-9850**	1	ELBOW	
	22	1	*148-8378*	3	ELBOW AS	
					(EACH INCLUDES)	
		1	**3J-1907**	1	SEAL-O-RING	
		1	**6V-8397**	1	SEAL-O-RING	
		1	**6V-8724**	1	ELBOW	
	23	1	*148-8433*	1	TEE AS	
		1	**6V-8397**	2	SEAL-O-RING	
		1	**6V-9836**	1	TEE-SWIVEL	
	24	1	*156-4282*	1	REDUCER AS	
		1	**6V-8397**	1	SEAL-O-RING	
		1	**6V-8938**	1	REDUCER	
	25	1	**177-2215**	1	STRAP-DUAL CLAMP	
	26	1	**4J-5267**	4	SEAL-O-RING	

418-8587 **VALVE & LINES GP-BOOM (**contd.**)** **i06861631**

NOTE	REF NO	GRAPHIC REF	PART NUMBER	QTY	PART NAME 1 2 3 4 5 6 (PRODUCT LEVEL)	SEE PAGE
	27	1	**6V-9746**	4	SEAL-O-RING	
M	28	1	**7X-2534**	4	BOLT (M6X1X50-MM)	
M	29	1	**8T-4137**	2	BOLT (M10X1.5X20-MM)	
M	30	1	**8T-4196**	12	BOLT (M10X1.5X35-MM)	
	31	1	**9X-6581**	1	NUT-O-RING SEAL (1-14-THD)	
B	32	1	**7K-1181**	6	STRAP-CABLE	
	33	1	**143-5906**	1	FILM-INSTRUCTION (VARIABLE ADJUSTABLE BOOM)	

B - USE AS REQUIRED
I - REFER TO HYDRAULIC INFORMATION SYSTEM
M - METRIC PART
Y - SEPARATE ILLUSTRATION

418-8587 **VALVE & LINES GP-BOOM (**contd.**)** **i06861631**

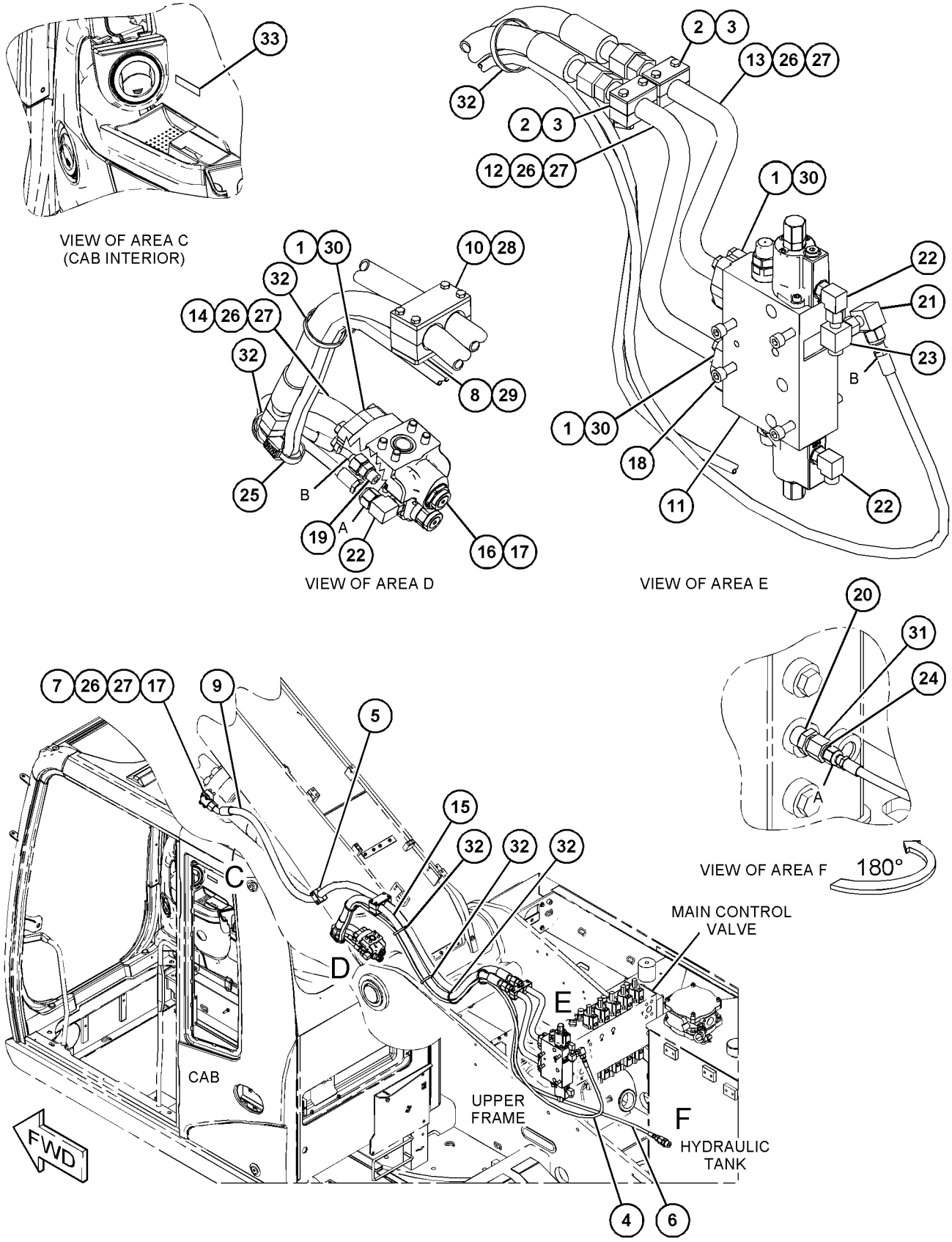

GRAPHIC #1 <END> g03574080

456-5833 VALVE & LINES GP-BOOM—VARIABLE ADJUSTABLE CYLINDER

S/N: CH91-UP

PART OF 446-2738, 446-2745 VALVE & LINES AR

AN ATTACHMENT

SMCS-5051, 5057 **i05970829**

NOTE	REF NO	GRAPHIC REF	PART NUMBER	QTY	PART NAME 1 2 3 4 5 6 (PRODUCT LEVEL)	SEE PAGE
	1	1	**5W-9857**	2	FLANGE-HALF	
	2	1	**116-7286**	1	CLAMP-SINGLE	
	3	1	**118-8985**	2	NUT-CLAMP	
	4	1	**135-4990**	1	CLAMP-SINGLE	
	5	1	**151-8866**	1	ELBOW	
	6	1	**189-2059**	1	PLATE AS	
I	7	1	**190-8552**	1	HOSE AS	
	8	1	*194-9396*	1	CLAMP GP-HYDRAULIC LINES	
		1	**194-9394**	2	CLAMP	
		1	**194-9395**	1	PLATE	
Y	9	1	**251-8038**	1	VALVE GP-CONTROL (BOOM) (VA BOOM)	661
	10	1	**330-4703**	1	TUBE AS	
M	11	1	**101-7398**	4	BOLT-SOCKET HEAD (M10X1.5X40-MM)	
M	12	1	**108-4282**	4	BOLT-SOCKET HEAD (M10X1.5X100-MM)	
	13	1	*148-8378*	2	ELBOW AS	
					(EACH INCLUDES)	
		1	**3J-1907**	1	SEAL-O-RING	
		1	**6V-8397**	1	SEAL-O-RING	
		1	**6V-8724**	1	ELBOW	
	14	1	**4J-5267**	2	SEAL-O-RING	
	15	1	**6V-9746**	2	SEAL-O-RING	
M	16	1	**7X-2534**	4	BOLT (M6X1X50-MM)	
M	17	1	**8T-4137**	2	BOLT (M10X1.5X20-MM)	
M	18	1	**8T-4196**	4	BOLT (M10X1.5X35-MM)	
	19	1	**143-5906**	1	FILM-INSTRUCTION (VARIABLE ADJUSTABLE BOOM)	

I - REFER TO HYDRAULIC INFORMATION SYSTEM
M - METRIC PART
Y - SEPARATE ILLUSTRATION

456-5833 **VALVE & LINES GP-BOOM (**contd.**)** **i05970829**

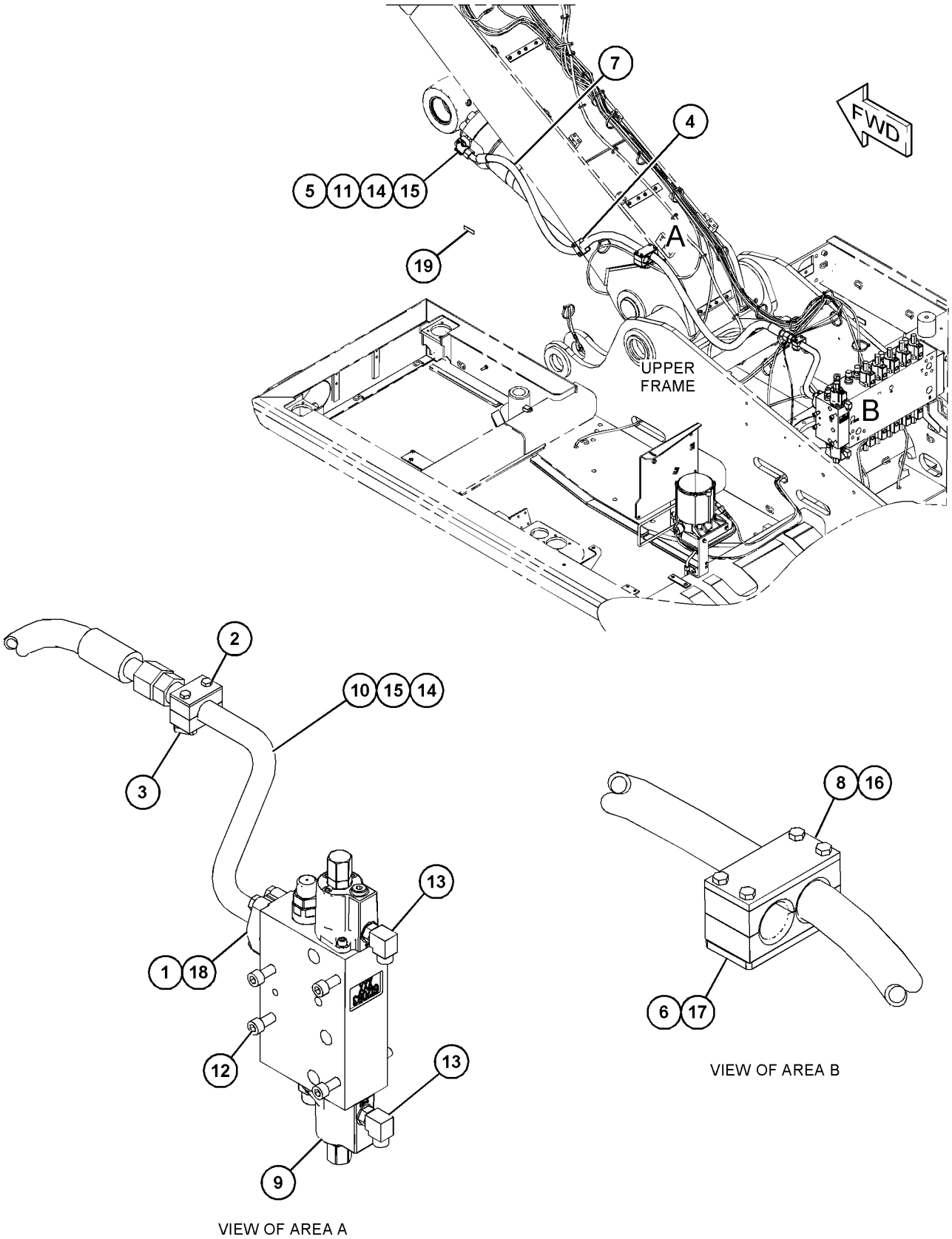

GRAPHIC #1 <END> g03743825

456-5835 VALVE & LINES GP-BOOM—DRIFT REDUCTION

S/N: CH91-UP

PART OF 446-2738, 446-2745 VALVE & LINES AR

AN ATTACHMENT

SMCS-5051, 5057 **i05970830**

NOTE	REF NO	GRAPHIC REF	PART NUMBER	QTY	PART NAME 1 2 3 4 5 6 (PRODUCT LEVEL)	SEE PAGE
	1	1	**5W-9857**	2	FLANGE-HALF	
	2	1	**116-7286**	1	CLAMP-SINGLE	
	3	1	**118-8985**	2	NUT-CLAMP	
I	4	1	**123-8303**	1	HOSE AS	
	5	1	**150-3954**	1	HOSE AS	
I	6	1	**185-6794**	1	HOSE AS	
Y	7	1	**254-0489**	1	VALVE GP-LOAD CONTROL (BOOM CYL, DRIFT REDUCTION)	672
M	8	1	**297-8107**	4	BOLT (M10X1.5X105-MM)	
	9	1	**330-4704**	1	TUBE AS	
	10	1	*148-8336*	1	CONNECTOR AS	
		1	**3J-1907**	1	SEAL-O-RING	
		1	**6V-8397**	1	SEAL-O-RING	
		1	**6V-8636**	1	CONNECTOR	
	11	1	*148-8367*	1	ELBOW AS	
		1	**6V-8397**	1	SEAL-O-RING	
		1	**6V-9850**	1	ELBOW	
	12	1	**148-8371**	1	ELBOW AS	
		1	**6V-8397**	1	SEAL-O-RING	
		1	**8C-8988**	1	ELBOW	
	13	1	*148-8378*	1	ELBOW AS	
		1	**3J-1907**	1	SEAL-O-RING	
		1	**6V-8397**	1	SEAL-O-RING	
		1	**6V-8724**	1	ELBOW	
	14	1	*148-8433*	2	TEE AS	
					(EACH INCLUDES)	
		1	**6V-8397**	2	SEAL-O-RING	
		1	**6V-9836**	1	TEE-SWIVEL	
	15	1	**1P-3702**	1	SEAL-RECTANGULAR	
	16	1	**4J-5267**	1	SEAL-O-RING	
	17	1	**6V-9746**	1	SEAL-O-RING	
	18	1	**8T-4121**	4	WASHER-HARD (11X21X2.5-MM THK)	
M	19	1	**8T-4182**	4	BOLT (M10X1.5X45-MM)	
	20	1	**8T-9403**	2	FLANGE-HALF	

I - REFER TO HYDRAULIC INFORMATION SYSTEM
M - METRIC PART
Y - SEPARATE ILLUSTRATION

456-5835 **VALVE & LINES GP-BOOM (**contd.**)** **i05970830**

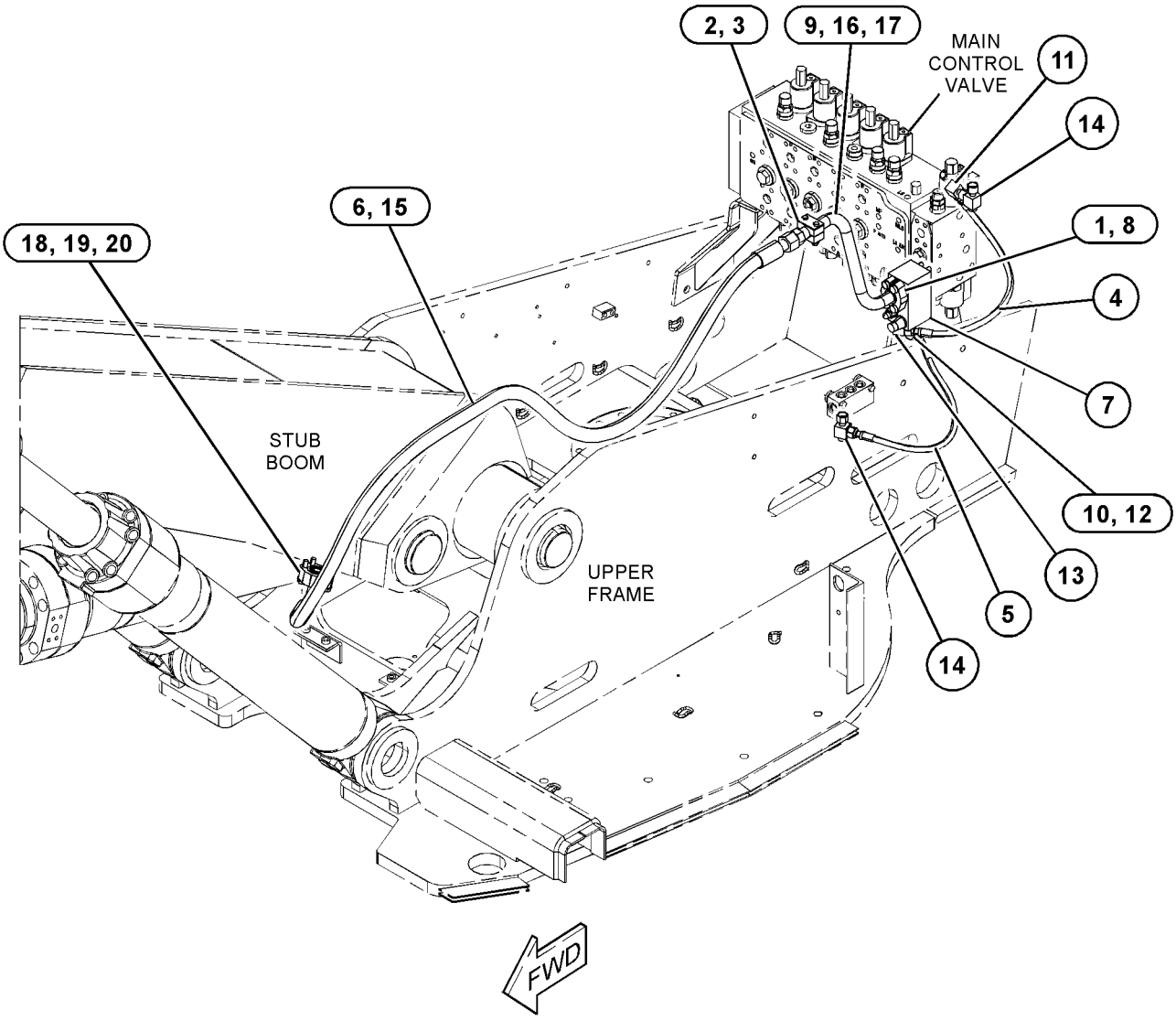

GRAPHIC #1 <END> g03744279

251-7921 VALVE & LINES GP-CONTROL

S/N: CH91-UP

PART OF 425-3925, 446-2745 VALVE & LINES AR

AN ATTACHMENT

SMCS-5051, 5057 **i06193971**

NOTE	REF NO	GRAPHIC REF	PART NUMBER	QTY	PART NAME 1 2 3 4 5 6 (PRODUCT LEVEL)	SEE PAGE
I	1	1	**138-1898**	1	HOSE AS	
I	2	1	**203-1911**	1	HOSE AS	
	3	1	**205-2453**	1	FLANGE	
Y	4	1	**254-0488**	1	VALVE GP-CHECK (PILOT OPERATED) (BOOM LOWERING, DRIFT REDUCTION)	656
M	5	1	**105-3489**	2	BOLT-SOCKET HEAD (M12X1.75X80-MM)	
	6	1	*148-8336*	1	CONNECTOR AS	
		1	**3J-1907**	1	SEAL-O-RING	
		1	**6V-8397**	1	SEAL-O-RING	
		1	**6V-8636**	1	CONNECTOR	
	7	1	*148-8353*	1	ELBOW AS	
		1	**3J-1907**	1	SEAL-O-RING	
		1	**6V-8397**	1	SEAL-O-RING	
		1	**6V-9001**	1	ELBOW	
	8	1	*148-8439*	1	TEE AS	
		1	**3J-1907**	1	SEAL-O-RING	
		1	**6V-8397**	2	SEAL-O-RING	
		1	**6V-8774**	1	TEE	
	9	1	**4J-0520**	2	SEAL-O-RING	
M	10	1	**7X-2551**	2	BOLT (M12X1.75X200-MM)	
	11	1	**8T-4223**	4	WASHER-HARD (13.5X25.5X3-MM THK)	
M	12	1	**8T-5041**	2	BOLT (M12X1.75X120-MM)	

I - REFER TO HYDRAULIC INFORMATION SYSTEM
M - METRIC PART
Y - SEPARATE ILLUSTRATION

251-7921 **VALVE & LINES GP-CONTROL (**contd.**)** **i06193971**

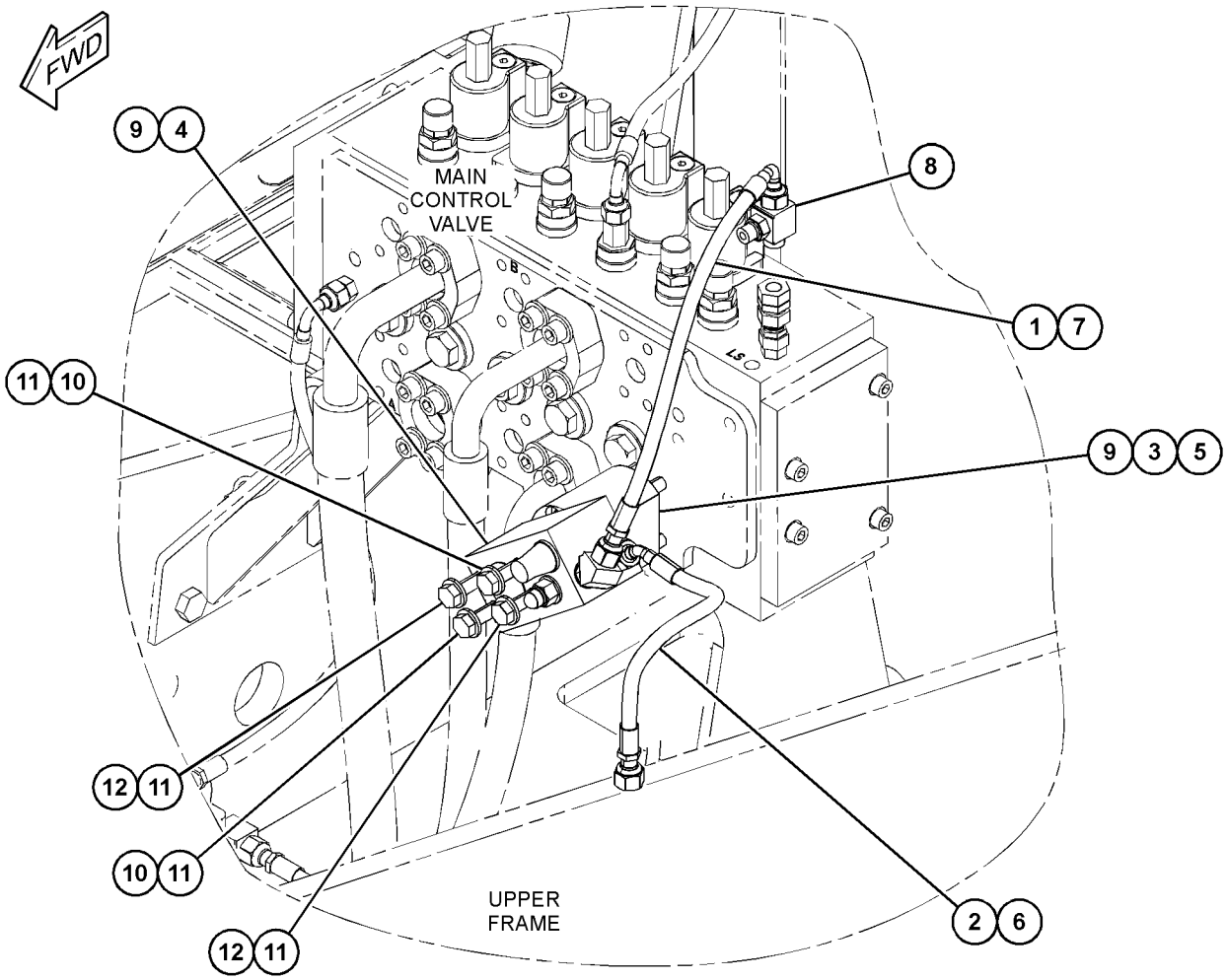

GRAPHIC #1 <END> g06032900

418-1196 VALVE & LINES GP-CONTROL—DRIFT REDUCTION, BUCKET

S/N: CH91-UP

PART OF 425-3925, 425-9134, 446-2738, 446-2745, 453-3004, 453-3005 VALVE & LINES AR AN ATTACHMENT

SMCS-5051, 5057

i05934575

NOTE	REF NO	GRAPHIC REF	PART NUMBER	QTY	PART NAME 1 2 3 4 5 6 (PRODUCT LEVEL)	SEE PAGE
	1	1	**8U-0284**	4	FLANGE-HALF	
	2	1	**118-8985**	2	NUT-CLAMP	
I	3	1	**129-4682**	1	HOSE AS	
I	4	1	**138-7948**	1	HOSE AS	
Y	5	1	**254-0488**	1	VALVE GP-CHECK (PILOT OPERATED) (BOOM LOWERING, DRIFT REDUCTION)	656
	6	1	**330-4647**	1	TUBE AS	
	7	1	**330-4651**	1	TUBE AS	
	8	1	**118-8984**	1	CLAMP	
	9	1	*148-8336*	2	CONNECTOR AS	
					(EACH INCLUDES)	
		1	**3J-1907**	1	SEAL-O-RING	
		1	**6V-8397**	1	SEAL-O-RING	
		1	**6V-8636**	1	CONNECTOR	
	10	1	*148-8378*	1	ELBOW AS	
		1	**3J-1907**	1	SEAL-O-RING	
		1	**6V-8397**	1	SEAL-O-RING	
		1	**6V-8724**	1	ELBOW	
	11	1	*148-8439*	1	TEE AS	
		1	**3J-1907**	1	SEAL-O-RING	
		1	**6V-8397**	2	SEAL-O-RING	
		1	**6V-8774**	1	TEE	
	12	1	**4J-0520**	3	SEAL-O-RING	
	13	1	**5K-9090**	1	SEAL-O-RING	
M	14	1	**8T-4183**	4	BOLT (M12X1.75X40-MM)	
M	15	1	**8T-5041**	4	BOLT (M12X1.75X120-MM)	

I - REFER TO HYDRAULIC INFORMATION SYSTEM
M - METRIC PART
Y - SEPARATE ILLUSTRATION

418-1196 **VALVE & LINES GP-CONTROL** (contd.) **i05934575**

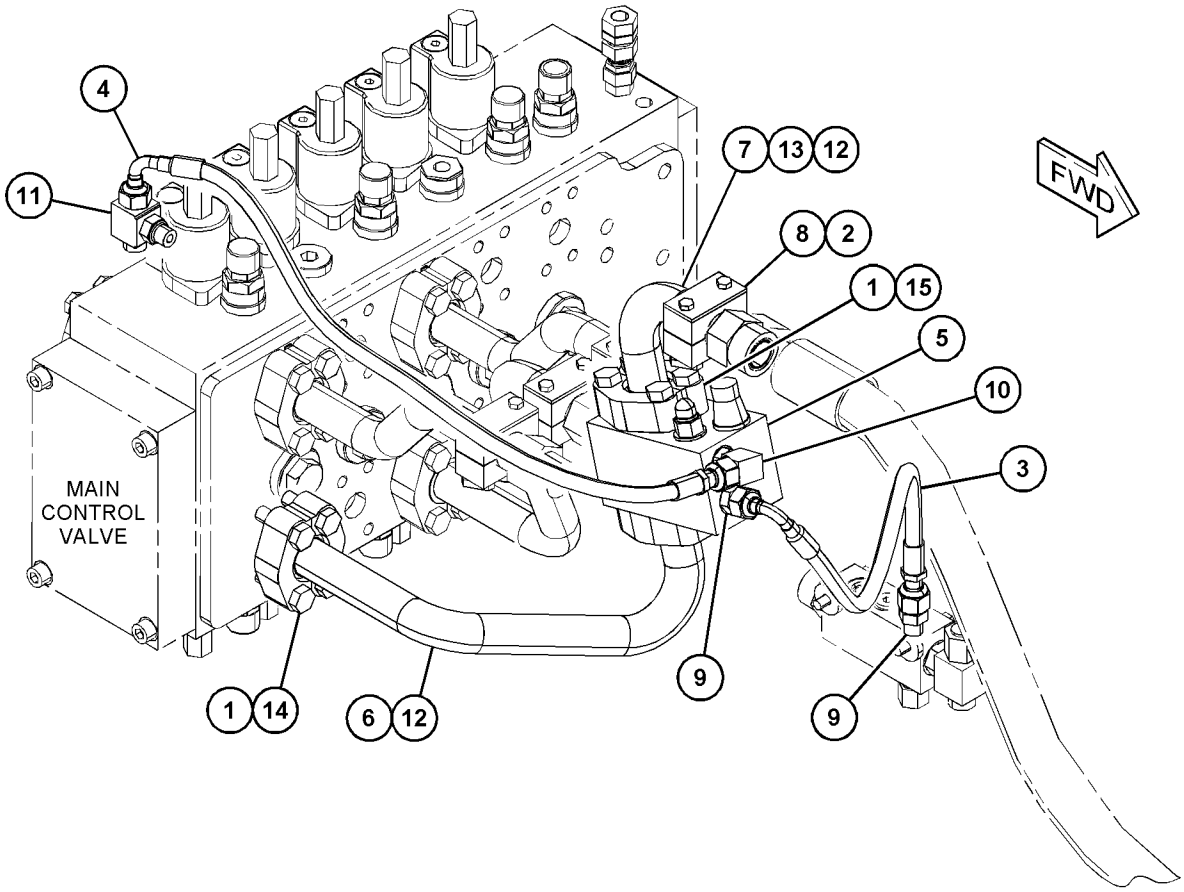

GRAPHIC #1 <END> g03567496

456-5834 VALVE & LINES GP-CONTROL

S/N: CH91-UP

PART OF 425-3925, 425-9134, 446-2738, 446-2745 VALVE & LINES AR

AN ATTACHMENT

SMCS-5051, 5057 **i05934582**

NOTE	REF NO	GRAPHIC REF	PART NUMBER	QTY	PART NAME 1 2 3 4 5 6 (PRODUCT LEVEL)	SEE PAGE
	1	1	**8U-0284**	2	FLANGE-HALF	
	2	1	**118-8985**	2	NUT-CLAMP	
I	3	1	**122-1233**	1	HOSE AS	
I	4	1	**123-8303**	1	HOSE AS	
Y	5	1	**254-0488**	1	VALVE GP-CHECK (PILOT OPERATED)	656
	6	1	**330-4698**	1	TUBE AS	
	7	1	**118-8984**	1	CLAMP	
	8	1	*148-8336*	2	CONNECTOR AS	
					(EACH INCLUDES)	
		1	**3J-1907**	1	SEAL-O-RING	
		1	**6V-8397**	1	SEAL-O-RING	
		1	**6V-8636**	1	CONNECTOR	
	9	1	*148-8367*	1	ELBOW AS	
		1	**6V-8397**	1	SEAL-O-RING	
		1	**6V-9850**	1	ELBOW	
	10	1	*148-8378*	1	ELBOW AS	
		1	**3J-1907**	1	SEAL-O-RING	
		1	**6V-8397**	1	SEAL-O-RING	
		1	**6V-8724**	1	ELBOW	
	11	1	*148-8435*	1	TEE AS	
		1	**3J-1907**	1	SEAL-O-RING	
		1	**6V-8397**	2	SEAL-O-RING	
		1	**6V-8781**	1	TEE	
	12	1	**4J-0520**	1	SEAL-O-RING	
	13	1	**6V-9746**	1	SEAL-O-RING	
M	14	1	**7X-2550**	4	BOLT (M12X1.75X110-MM)	

I - REFER TO HYDRAULIC INFORMATION SYSTEM
M - METRIC PART
Y - SEPARATE ILLUSTRATION

456-5834 **VALVE & LINES GP-CONTROL** (contd.) **i05934582**

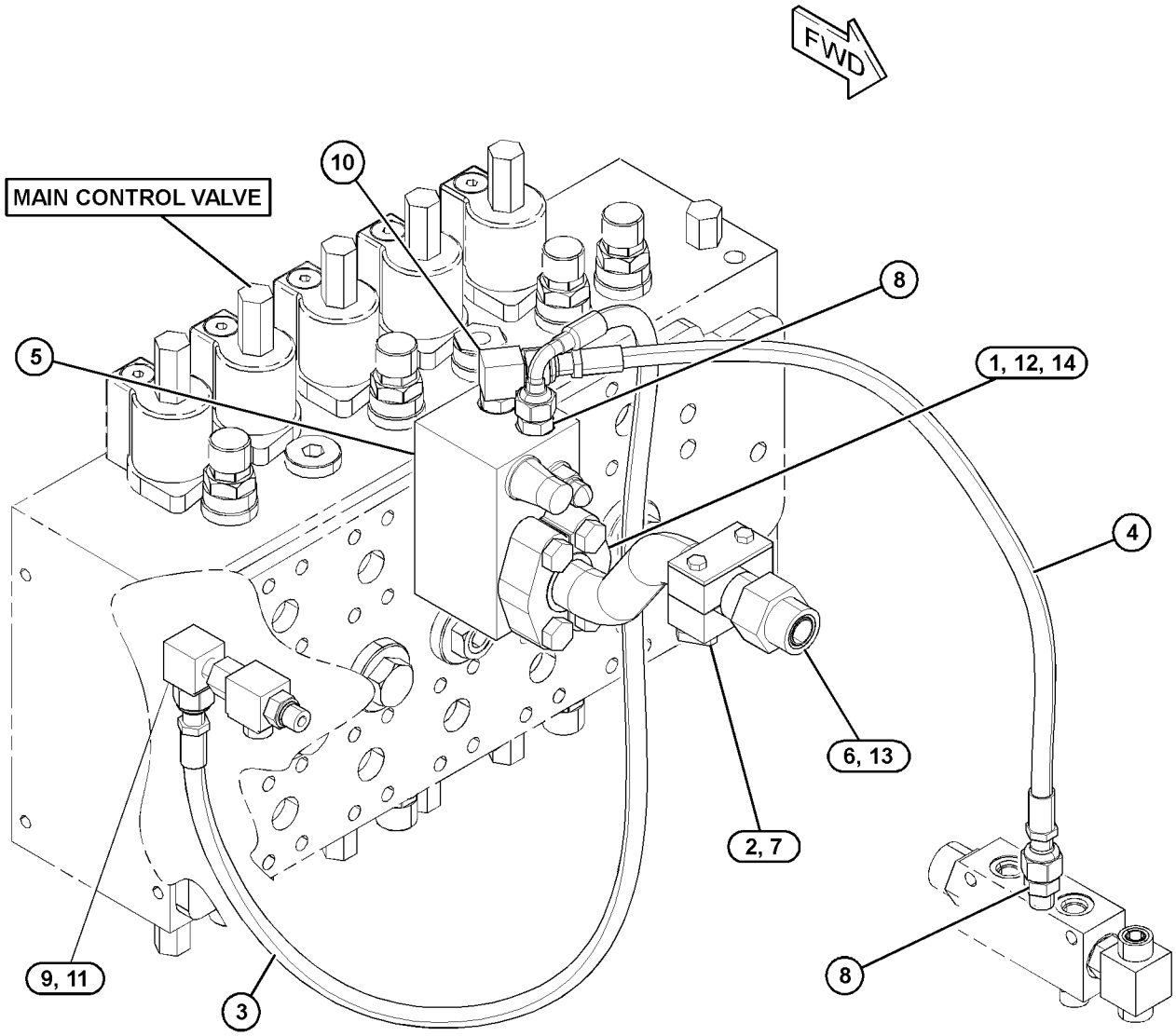

GRAPHIC #1 <END> g03743940

251-7947 VALVE & LINES GP-HEAVY LIFT

S/N: CH91-UP
PART OF 449-2784 HYDRAULIC AR
ALSO AN ATTACHMENT

SMCS-5059, 5479 **i05934403**

NOTE	REF NO	GRAPHIC REF	PART NUMBER	QTY	PART NAME 1 2 3 4 5 6 (PRODUCT LEVEL)	SEE PAGE
I	1	1	**113-0440**	1	HOSE AS	
	2	1	*148-8378*	1	ELBOW AS	
		1	**3J-1907**	1	SEAL-O-RING	
		1	**6V-8397**	1	SEAL-O-RING	
		1	**6V-8724**	1	ELBOW	

I - REFER TO HYDRAULIC INFORMATION SYSTEM

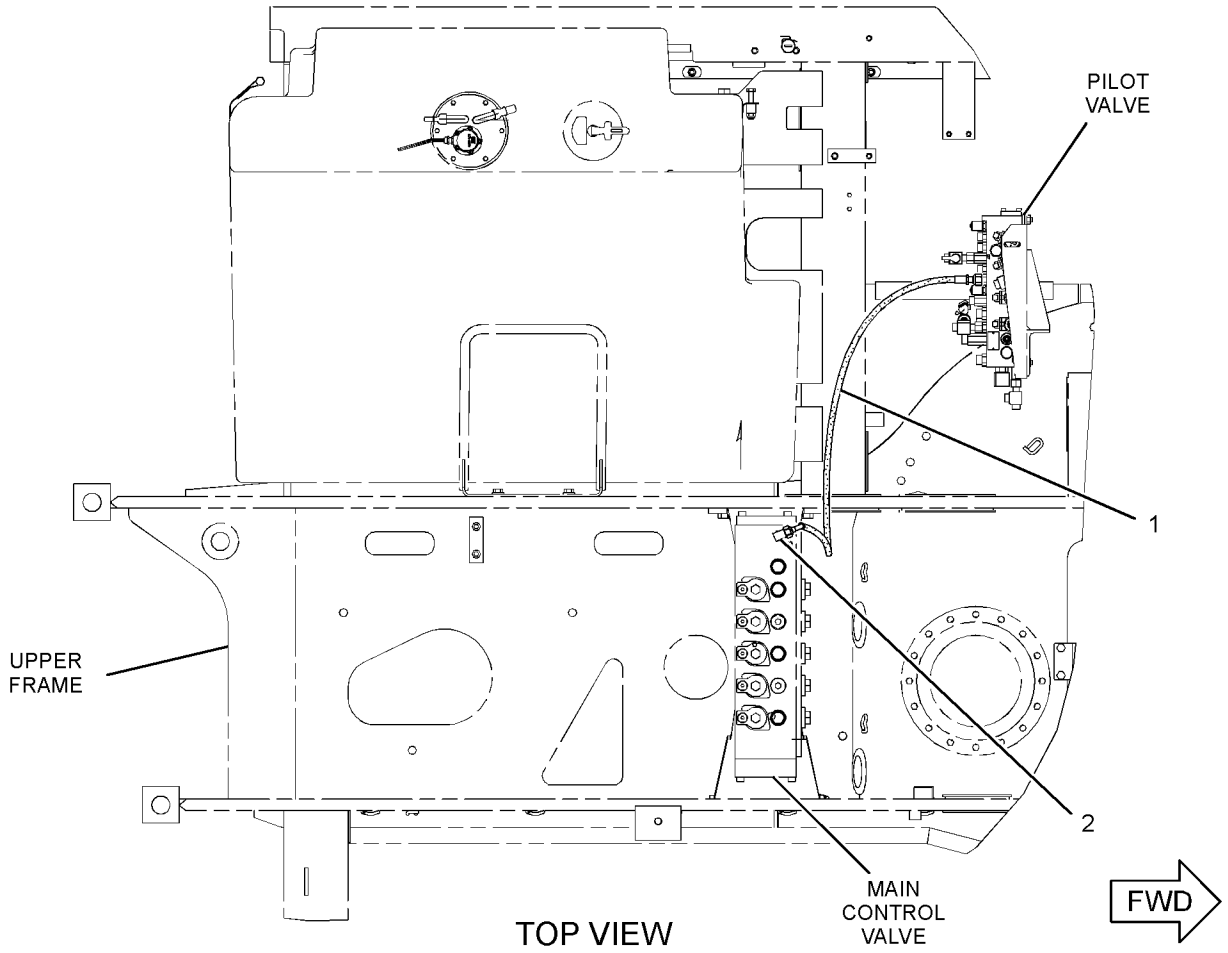

GRAPHIC #1 <END> g01372308

251-7934 VALVE & LINES GP-TRAVEL CONT—FAST TRAVEL

S/N: CH91-UP
PART OF 449-2784 HYDRAULIC AR
ALSO AN ATTACHMENT

SMCS-5051, 5057 **i05934404**

NOTE	REF NO	GRAPHIC REF	PART NUMBER	QTY	PART NAME 1 2 3 4 5 6 (PRODUCT LEVEL)	SEE PAGE
I	1	1	**130-8233**	1	HOSE AS	
I	2	1	**138-7948**	1	HOSE AS	
I	3	1	**155-6985**	1	HOSE AS	
Y	4	1	**367-9241**	1	VALVE GP-SOLENOID (FAST TRAVEL)	718
	5	1	**271-2682**	1	PLATE	
I	6	1	**340-3251**	1	HOSE AS	
I	7	1	**340-3252**	1	HOSE AS	
M	8	1	**131-3540**	2	LOCKNUT (M8X1.25-THD)	
	9	1	*148-8336*	2	CONNECTOR AS	
					(EACH INCLUDES)	
		1	**3J-1907**	1	SEAL-O-RING	
		1	**6V-8397**	1	SEAL-O-RING	
		1	**6V-8636**	1	CONNECTOR	
	10	1	*148-8340*	3	CONNECTOR AS	
					(EACH INCLUDES)	
		1	**3K-0360**	1	SEAL-O-RING	
		1	**6V-8398**	1	SEAL-O-RING	
		1	**6V-8639**	1	CONNECTOR	
	11	1	*148-8370*	2	ELBOW AS	
					(EACH INCLUDES)	
		1	**6V-8398**	1	SEAL-O-RING	
		1	**6V-9851**	1	ELBOW	
	12	1	*148-8381*	1	ELBOW AS	
		1	**3D-2824**	1	SEAL-O-RING	
		1	**6V-8398**	1	SEAL-O-RING	
		1	**8T-5429**	1	ELBOW	
	13	1	*148-8415*	1	REDUCER AS	
		1	**6V-8397**	1	SEAL-O-RING	
		1	**6V-8936**	1	REDUCER	
	14	1	*148-8444*	2	TEE AS-SWIVEL	
					(EACH INCLUDES)	
		1	**6V-8398**	2	SEAL-O-RING	
		1	**6V-9837**	1	TEE-SWIVEL	
	15	1	*164-8908*	1	CONNECTOR AS	
		1	**3K-0360**	1	SEAL-O-RING	
		1	**6V-8398**	2	SEAL-O-RING	
		1	**8T-0077**	1	CONNECTOR	
	16	1	**5P-4116**	4	WASHER-HARD (8.8X20.5X2-MM THK)	
M	17	1	**8T-4908**	2	BOLT (M8X1.25X25-MM)	
M	18	1	**8T-6870**	2	BOLT (M8X1.25X70-MM)	

I - REFER TO HYDRAULIC INFORMATION SYSTEM
M - METRIC PART
Y - SEPARATE ILLUSTRATION

251-7934 **VALVE & LINES GP-TRAVEL CONT** (contd.) **i05934404**

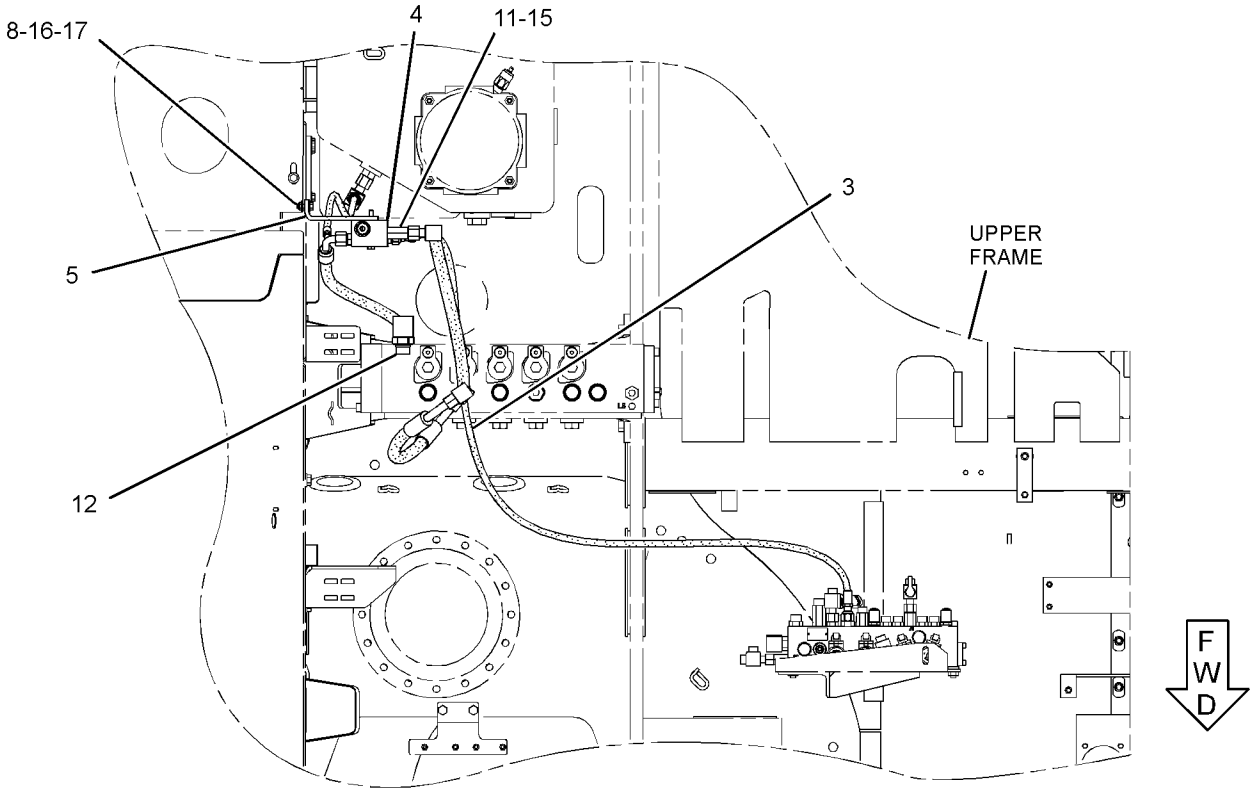

TOP VIEW

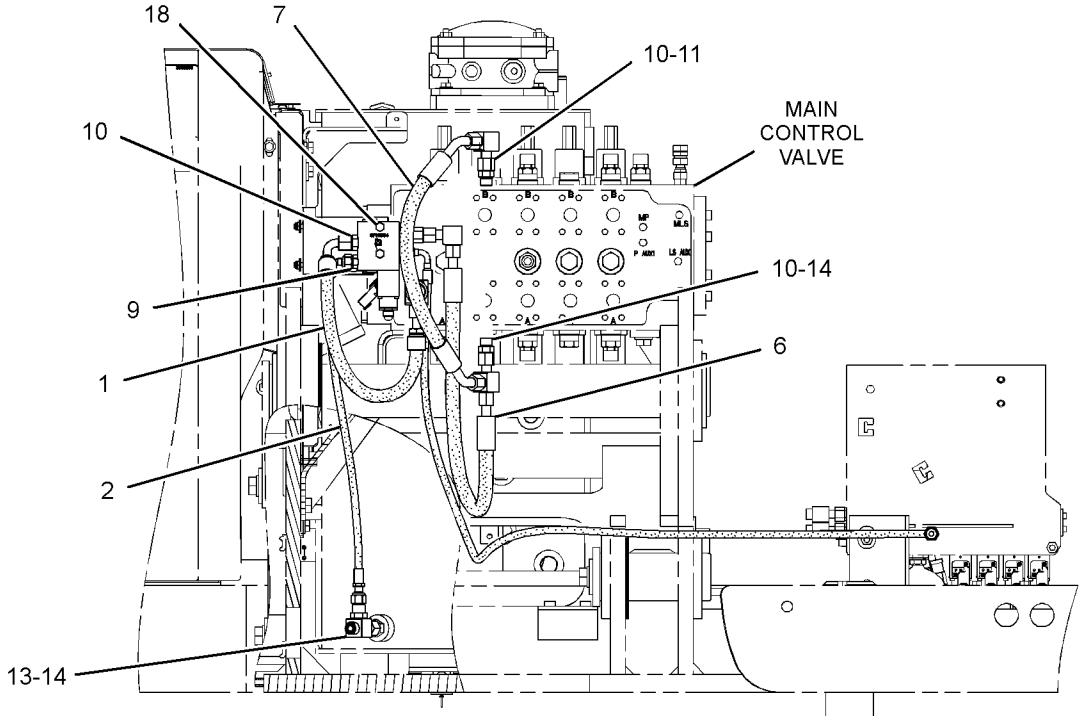

FRONT VIEW

GRAPHIC #1 <END> g02621240

393-1539 VALVE & MTG GP-MAIN CONTROL

S/N: CH91-UP
PART OF 449-2784 HYDRAULIC AR
ALSO AN ATTACHMENT

SMCS-5051 **i05934405**

NOTE	REF NO	GRAPHIC REF	PART NUMBER	QTY	PART NAME 1 2 3 4 5 6 (PRODUCT LEVEL)	SEE PAGE
	1	1	**193-5970**	1	SUPPORT AS	
	2	1	**266-9593**	1	BRACKET AS	
Y	3	1	**340-6790**	1	VALVE GP-MAIN CONTROL	676
M	4	1	**7X-2552**	7	BOLT (M16X2X30-MM)	
	5	1	**9X-8257**	2	WASHER (17.5X30X3.5-MM THK)	

M - METRIC PART
Y - SEPARATE ILLUSTRATION

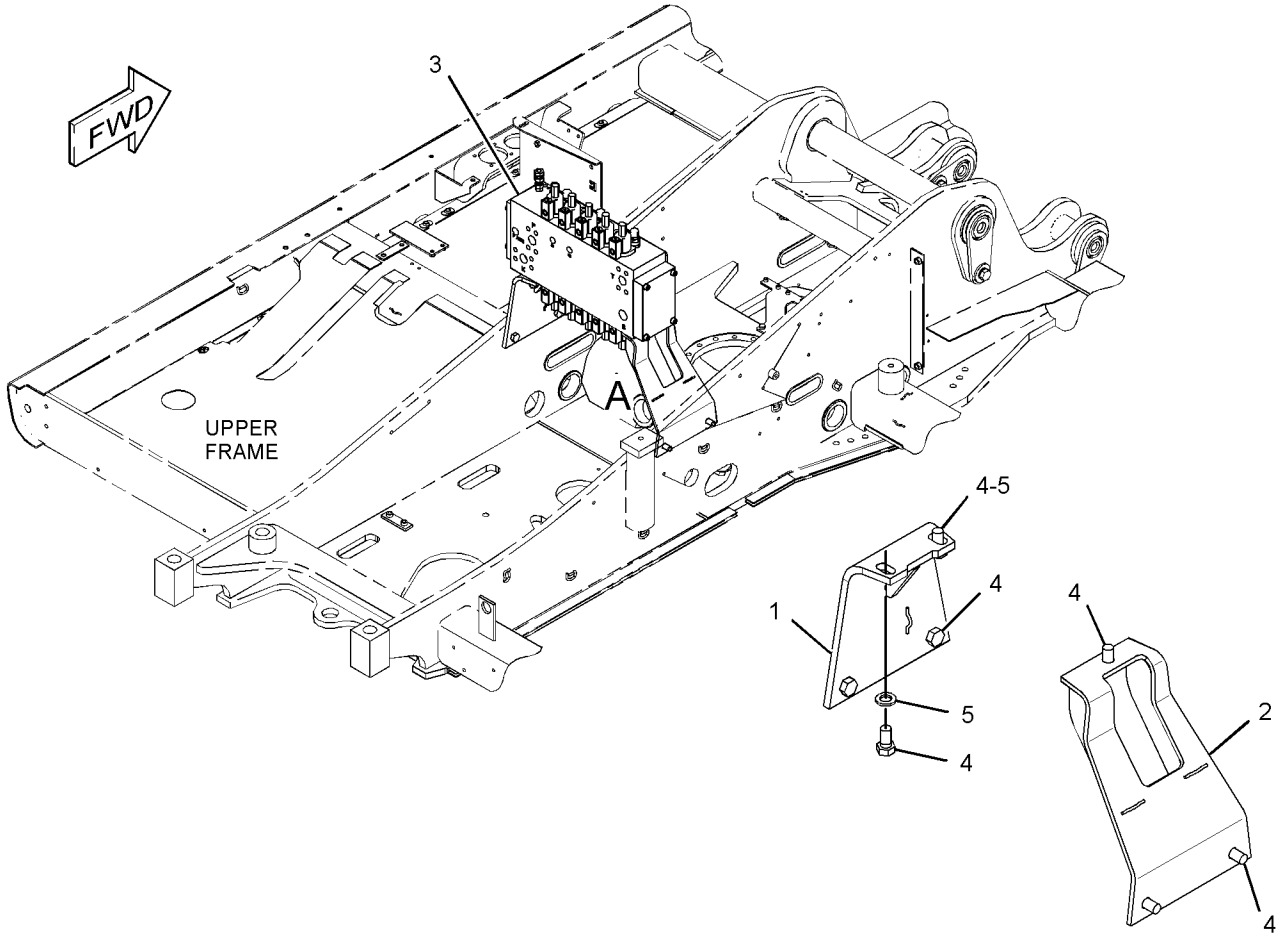

VIEW OF AREA A
(VALVE REMOVED FOR CLARITY)

GRAPHIC #1 <END> g03060779

307-2789 VALVE & MTG GP-SOLENOID—MEDIUM PRESSURE, AUXILIARY

S/N: CH91-UP

PART OF 251-7942 VALVE & LINES GP-AUXILIARY

AN ATTACHMENT

SMCS-5479 **i05915931**

NOTE	REF NO	GRAPHIC REF	PART NUMBER	QTY	PART NAME 1 2 3 4 5 6 (PRODUCT LEVEL)	SEE PAGE
Y	1	1	**254-2643**	1	VALVE GP-SOLENOID (MEDIUM PRESSURE, AUXILIARY)	709
	2	1	*148-8340*	1	CONNECTOR AS	
		1	**3K-0360**	1	SEAL-O-RING	
		1	**6V-8398**	1	SEAL-O-RING	
		1	**6V-8639**	1	CONNECTOR	
	3	1	*148-8345*	1	CONNECTOR AS	
		1	**2M-9780**	1	SEAL-O-RING	
		1	**6V-8398**	1	SEAL-O-RING	
		1	**6V-8638**	1	CONNECTOR	
	4	1	*148-8372*	1	ELBOW AS	
		1	**2M-9780**	1	SEAL-O-RING	
		1	**6V-8398**	1	SEAL-O-RING	
		1	**6V-8721**	1	ELBOW	
	5	1	*164-5608*	1	CONNECTOR AS	
		1	**3K-0360**	1	SEAL-O-RING	
		1	**6V-8398**	1	SEAL-O-RING	
		1	**8T-1687**	1	CONNECTOR	
M	6	1	**8T-4186**	2	BOLT (M10X1.5X40-MM)	

M - METRIC PART
Y - SEPARATE ILLUSTRATION

307-2789 **VALVE & MTG GP-SOLENOID** (contd.) **i05915931**

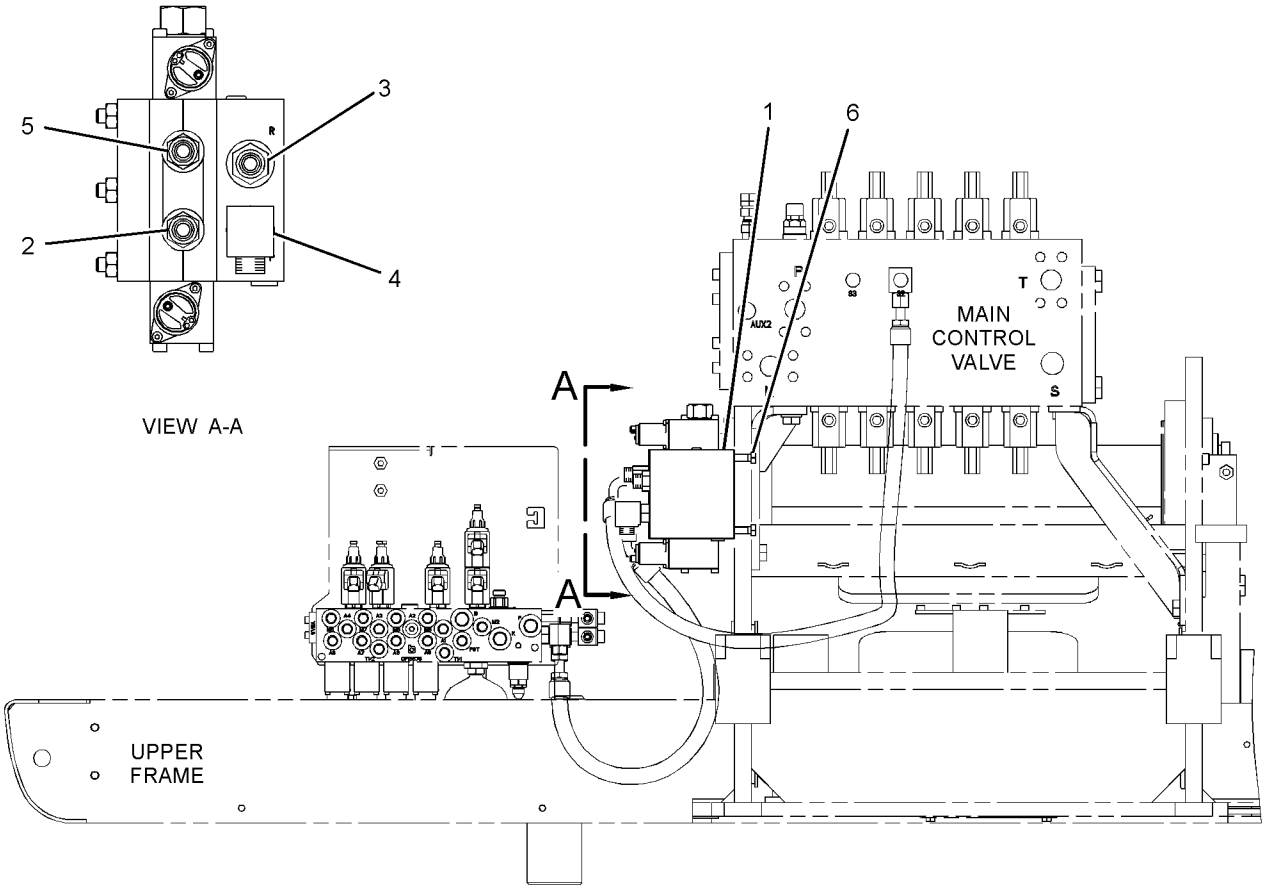

REAR VIEW

GRAPHIC #1 <END> g01361731

293-0511 VALVE GP-BRAKE CONTROL—HYDRAULIC MOTOR

S/N: CH91-UP
PART OF 291-3711 MOTOR GP-PISTON
ALSO AN ATTACHMENT

SMCS-4265, 5051 **i05513205**

NOTE	REF NO	GRAPHIC REF	PART NUMBER	QTY	PART NAME 1 2 3 4 5 6 (PRODUCT LEVEL)	SEE PAGE
Y	1	1	**191-3952**	2	VALVE GP-RELIEF (CROSSOVER, TRAVEL)	698
	2	1	**191-2708**	1	VALVE AS-SHUTTLE (TRAVEL BRAKE)	
	3	1	**293-0512**	1	PISTON AS (BRAKE VALVE)	
	4	1	**219-6714**	2	VALVE AS-CHECK (CROSSOVER, TRAVEL)	
					(EACH INCLUDES)	
		1	**221-2760**	1	RING-RETAINING	
		1	**221-3491**	1	SEAL-O-RING	
	5	1	**191-2710**	1	COVER	
	6	1	**191-2711**	1	COVER	
	7	1	**9T-3929**	1	PLUG AS	
		1	**6E-5479**	1	SEAL	
M	8	1	**191-2809**	2	BOLT-SOCKET HEAD (M6X1X85-MM)	
	9	1	**179-6919**	1	ORIFICE	
	10	1	**5P-1480**	2	SEAL-O-RING	
	11	1	**191-2962**	2	SEAL-O-RING	
	12	1	**9X-4617**	2	SEAL-O-RING	
	13	1	**191-2712**	1	PLUG	
	14	1	**196-8804**	2	PLUG GP	
					(EACH INCLUDES)	
		1	**196-6803**	1	SEAL-O-RING	
M	15	1	**3E-8007**	4	BOLT-SOCKET HEAD (M12X1.75X90-MM)	
M	16	1	**6V-8200**	4	BOLT-SOCKET HEAD (M12X1.75X35-MM)	

M - METRIC PART
Y - SEPARATE ILLUSTRATION

293-0511 **VALVE GP-BRAKE CONTROL** (contd.) **i05513205**

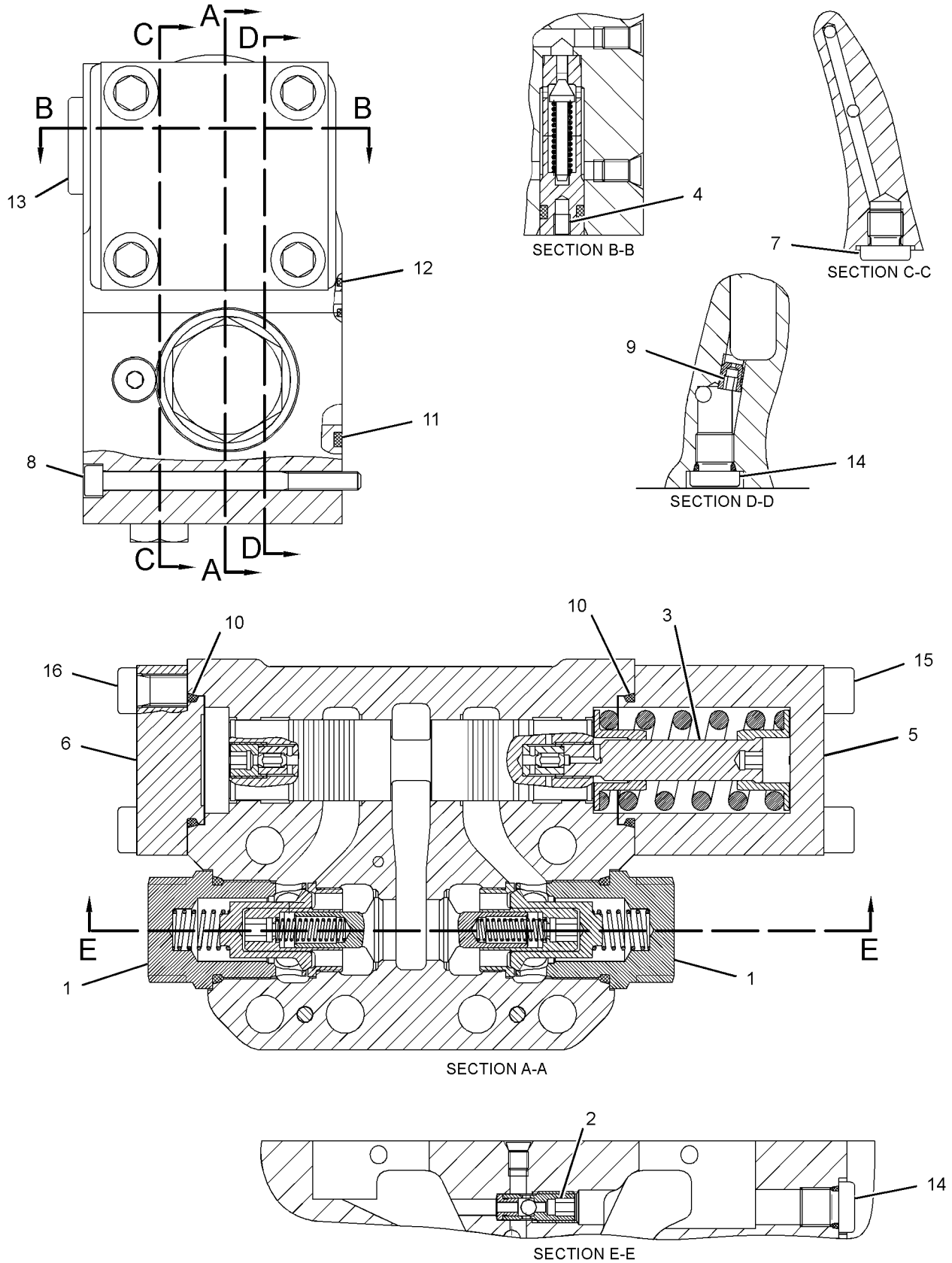

GRAPHIC #1 <END> g01325315

254-0488 VALVE GP-CHECK

S/N: CH91-UP

PART OF 418-8739 VALVE & LINES GP-AUXILIARY, 251-7921, 418-1196, 456-5834 VALVE & LINES GP-CONTROL

AN ATTACHMENT

SMCS-5067 **i05543470**

NOTE	REF NO	GRAPHIC REF	PART NUMBER	QTY	PART NAME 1 2 3 4 5 6 (PRODUCT LEVEL)	SEE PAGE
	1	1	**179-4649**	1	BODY AS	
	2	1	**179-4651**	1	BODY	
	3	1	**179-4652**	1	VALVE AS-CHECK (BOOM LOWERING, DRIFT REDUCTION)	
	4	1	**179-4654**	1	CONE	
	5	1	**179-4656**	1	BODY	
	6	1	**179-4657**	1	PISTON	
	7	1	**179-4658**	1	PISTON	
	8	1	**179-4169**	1	PLUG-ADJUSTMENT	
	9	1	**179-4661**	1	SPINDLE	
	10	1	**179-4666**	1	CONE	
	11	1	**179-4667**	1	POPPET	
	12	1	**179-4668**	1	RETAINER-BALL	
	13	1	**179-4669**	1	ADAPTER	
	14	1	**179-4670**	1	SPINDLE	
	15	1	**8U-6465**	1	SPRING	
	16	1	**179-4170**	1	SPRING	
	17	1	**179-4171**	1	SPRING	
	18	1	**179-4173**	1	SPRING	
J	19	1	**179-4176**	1	RING-BACKUP	
J	20	1	**179-4178**	1	RING-BACKUP	
J	21	1	**8U-7383**	1	SEAL-O-RING	
J	22	1	**161-6149**	2	SEAL-O-RING	
J	23	1	**6V-8399**	2	SEAL-O-RING	
J	24	1	**9X-7454**	1	SEAL-O-RING	
J	25	1	**5K-5221**	1	SEAL-O-RING	
J	26	1	**096-6100**	1	SEAL-O-RING	
J	27	1	**4J-0520**	1	SEAL-O-RING	
J	28	1	**8U-7389**	1	RING	
	29	1	**3D-7943**	1	RING-RETAINING	
JM	30	1	**5W-9420**	1	LOCKNUT (M8X1.25-THD)	
J	31	1	**179-4180**	1	LOCKNUT	
	32	1	**8U-1218**	1	CAP-NUT	
					AVAILABLE REPAIR KIT(S):	
J			**179-4672**	1	KIT-SEAL (LOAD CONTROL VALVE)	

J - KIT MARKED J SERVICES PART(S) MARKED J
M - METRIC PART

254-0488 **VALVE GP-CHECK** (contd.) **i05543470**

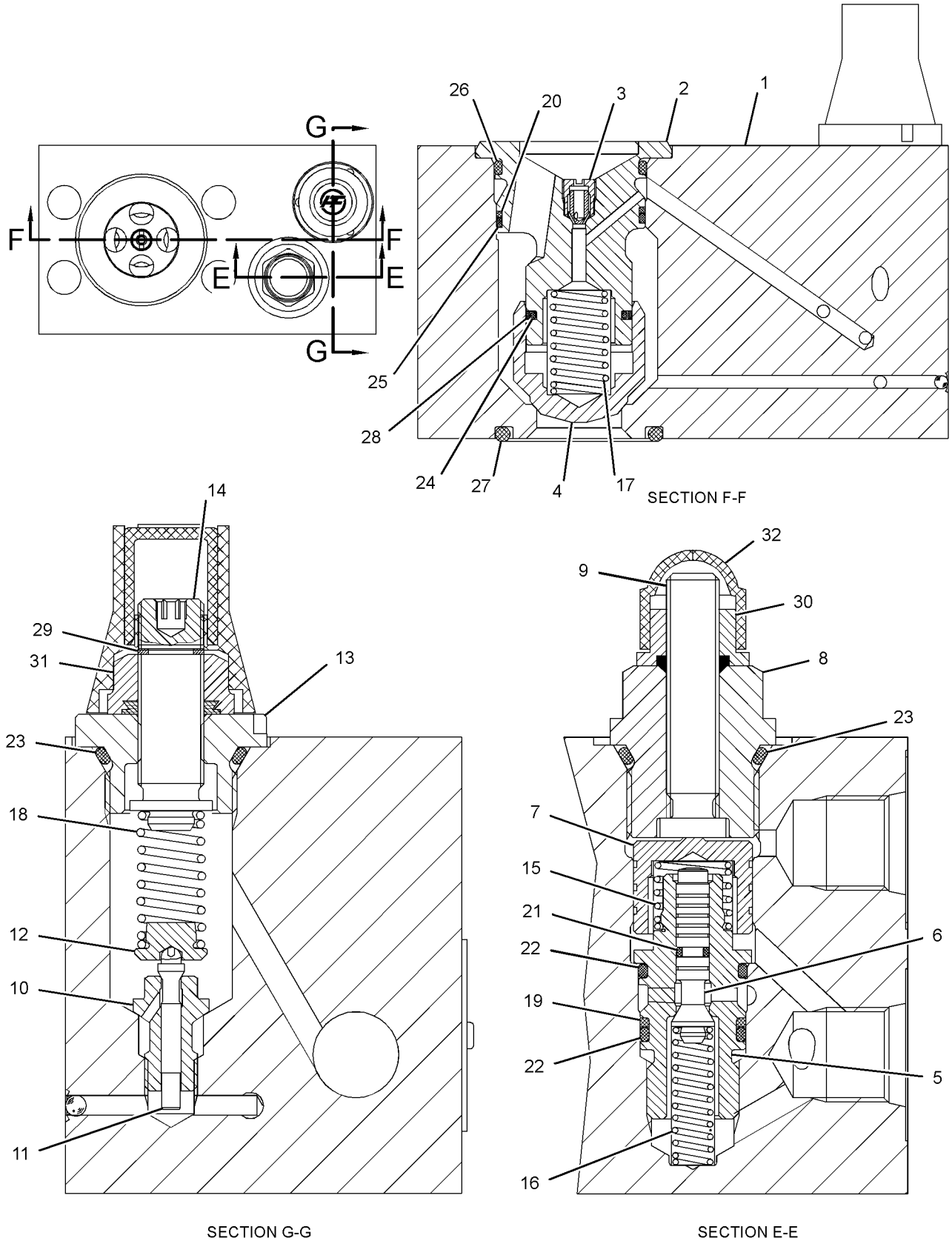

GRAPHIC #1 <END> g01327771

358-9923 VALVE GP-COMBINATION—MULTIFUNCTION

S/N: CH91-UP

PART OF 418-8739 VALVE & LINES GP-AUXILIARY

AN ATTACHMENT

SMCS-5064 **i05629349**

NOTE	REF NO	GRAPHIC REF	PART NUMBER	QTY	PART NAME 1 2 3 4 5 6 (PRODUCT LEVEL)	SEE PAGE
J	1	1	**3E-6788**	2	SEAL-O-RING	
	2	1	**114-0787**	2	SPRING-RETAINER	
	3	1	**202-8518**	2	SPRING	
	4	1	**9X-4626**	1	SEAL-O-RING	
	5	1	**273-0847**	1	ACTUATOR	
M	6	1	**8T-2396**	2	BOLT (M6X1X60-MM)	
Y	7	1	**322-6342**	2	VALVE GP-SOLENOID & PRESS REDC (MULTIFUNCTION CONTROL VALVE)	724
	8	1	**288-8033**	1	PLATE	
	9	1	**288-8034**	1	SEAL-RING	
M	10	1	**236-9838**	1	BOLT-SOCKET HEAD (M6X1X8-MM)	
M	11	1	**8T-0269**	2	BOLT-SOCKET HEAD (M6X1X20-MM)	
	12	1	**214-3402**	1	SPOOL	
	13	1	**202-8519**	1	SPRING	
	14	1	**207-0416**	1	PLUG	
J	15	1	**5P-7530**	1	SEAL-O-RING	
	16	1	**207-1716**	1	CONE	
	17	1	**202-8517**	1	SPRING	
	18	1	**273-0849**	1	PLUG AS	
	19	1	**291-4623**	1	VALVE GP-SOLENOID & RELIEF (MULTIFUNCTION CONTROL VALVE)	
		1	**6V-4589**	1	SEAL-O-RING	
		1	**291-5803**	1	SOLENOID (MULTIFUNCTION COMBINED VALVE)	
		1	**291-5804**	1	NUT-CAP	
		1	**291-5805**		KIT-SEAL (MULTIFUNCTION CONTROL VALVE)	
					(INCLUDES O-RING SEALS & BACKUP RINGS)	
	20	1	**339-6258**	1	VALVE GP-RELIEF (LINE, VARIABLE ADJUSTABLE BOOM)	
		1	**204-6353**	1	KIT-SEAL (VALVE) (LINE, BOOM)	
					(INCLUDES LOCKNUTS, O-RING SEALS & BACKUP RINGS)	
	21	1	**190-9752**	1	PLUG AS	
	22	1	**359-9469**	1	PLUG AS	
		1	**359-9486**	1	KIT-SEAL	
					(INCLUDES O-RING SEALS & BACKUP RINGS)	
	23	1	**207-2607**	1	VALVE AS (HYDRAULIC GENERATOR)	
		1	**207-3085**	1	KIT-SEAL (VALVE)	
					(INCLUDES O-RING SEAL & THRUST RING)	
	24	1	**207-0983**	1	NUT (M22X1.5-THD)	
	25	1	**202-8525**	1	SPRING	
	26	1	**207-0418**	1	PLUG	
	27	1	**9X-4619**	1	SEAL-O-RING	
	28	1	**202-8524**	1	SPRING	
	29	1	**207-0807**	1	SPOOL	
	30	1	**207-3164**	1	PLUG GP	
		1	**5W-9413**	1	SEAL-O-RING	
	31	1	**297-0142**	1	VALVE GP-SOLENOID (MULTIFUNCTION CONTROL VALVE)	
		1	**3E-6749**	1	SEAL-O-RING	

358-9923 **VALVE GP-COMBINATION (**contd.**)** **i05629349**

NOTE	REF NO	GRAPHIC REF	PART NUMBER	QTY	PART NAME 1 2 3 4 5 6 (PRODUCT LEVEL)	SEE PAGE
		1	**033-5879**	1	SEAL-O-RING	
		1	**123-2341**	1	SEAL-O-RING	
	32	1	**291-4624**	1	VALVE GP-SOLENOID & RELIEF (MULTIFUNCTION CONTROL VALVE)	
		1	**291-5803**	1	SOLENOID (MULTIFUNCTION COMBINED VALVE)	
		1	**291-5806**	1	NUT-SPECIAL (M18X1.5-THD)	
		1	**291-5807**	1	KIT-SEAL (SOLENOID VALVE)	
					(INCLUDES O-RING SEALS & BACKUP RINGS)	
	33	1	**288-8035**	1	SPOOL	
					(USE WITH HOUSING MARKED "O")	
					—OR—	
		1	**288-8036**	1	SPOOL	
					(USE WITH HOUSING MARKED "30")	
J	35	1	**235-1838**	1	SEAL-O-RING	
J	36	1	**3P-1155**	2	SEAL-O-RING	
	37	1	**214-3413**	1	NOZZLE	
	38	1	**114-0207**	5	PLUG GP-CONTROL VALVE (GENERATOR)	
					(EACH INCLUDES)	
		1	**214-7568**	1	SEAL-O-RING	
	39	1	**214-3403**	1	VALVE AS-CHECK (HYDRAULIC GENERATOR)	
	40	1	**235-2175**	1	SEAL-RING	
					AVAILABLE REPAIR KIT(S):	
J			**204-4951**	1	KIT-SEAL (COMBINATION VALVE)	
					(ALSO INCLUDES O-RING SEALS)	

J - KIT MARKED J SERVICES PART(S) MARKED J
M - METRIC PART
Y - SEPARATE ILLUSTRATION

358-9923 **VALVE GP-COMBINATION (**contd.**)** **i05629349**

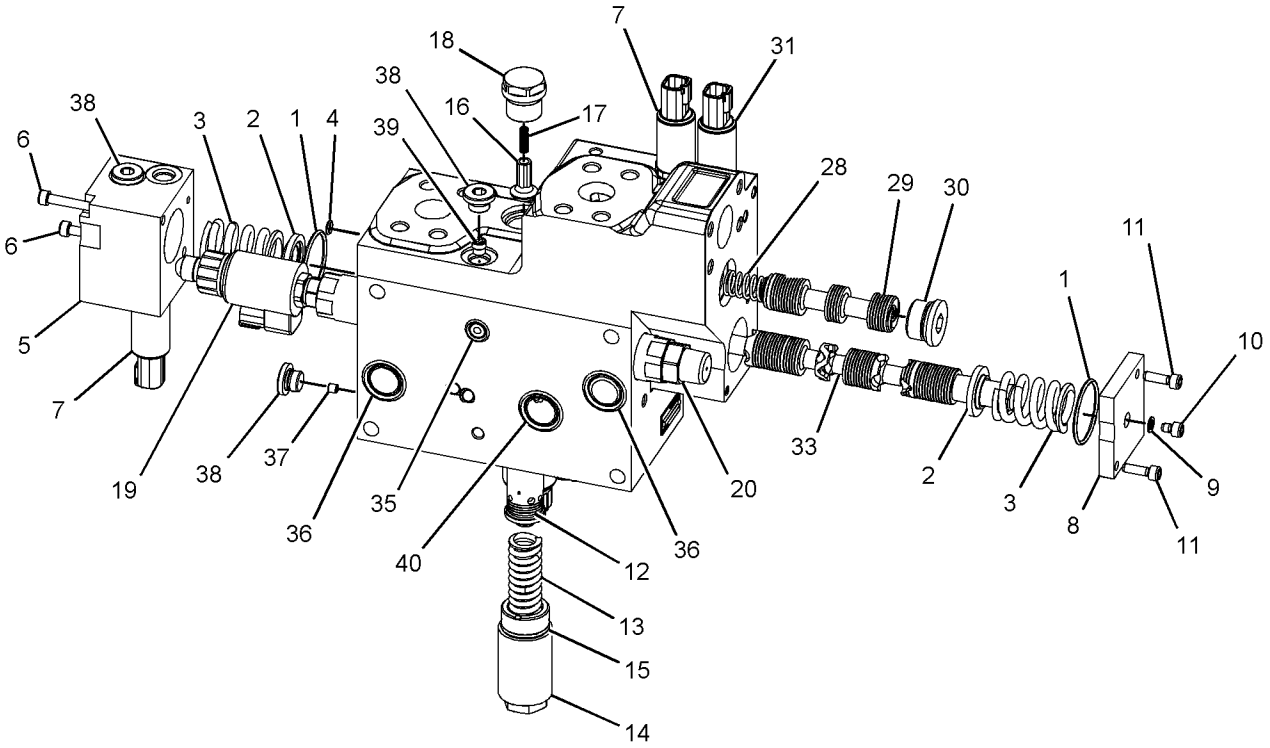

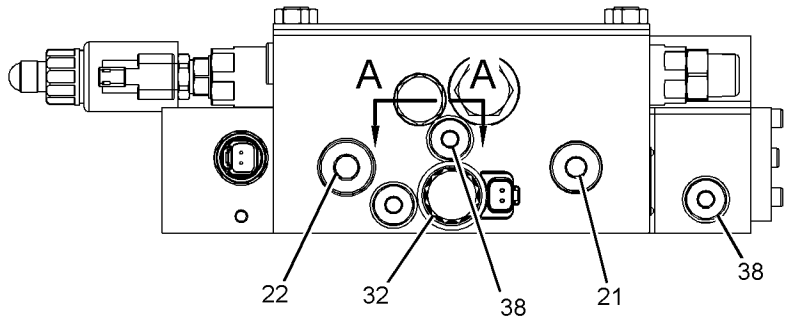

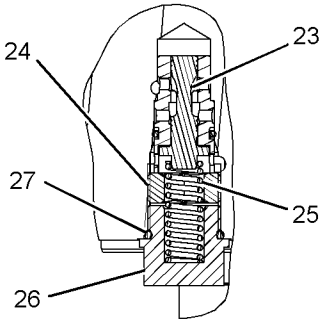

SECTION A-A

GRAPHIC #1 <END> g03584581

251-8038 VALVE GP-CONTROL–VA BOOM

S/N: CH91-UP

PART OF 418-8587, 456-5833 VALVE & LINES GP-BOOM

AN ATTACHMENT

SMCS-5051 **i05519563**

NOTE	REF NO	GRAPHIC REF	PART NUMBER	QTY	PART NAME 1 2 3 4 5 6 (PRODUCT LEVEL)	SEE PAGE
J	1	1	**3E-6788**	2	SEAL-O-RING	
	2	1	**114-0787**	2	SPRING-RETAINER	
	3	1	**224-9210**	2	SPRING	
	4	1	**189-5681**	2	ACTUATOR GP (VARIABLE ADJUSTABLE BOOM)	
					(EACH INCLUDES)	
		1	**061-8639**	2	SEAL-O-RING	
M		1	**114-2999**	1	NUT-CAP (M12X1-THD)	
M		1	**114-3025**	1	NUT (M12X1-THD)	
M		1	**189-9977**	1	SETSCREW (M12X1X38-MM)	
M	5	1	**6V-5683**	4	BOLT (M6X1X16-MM)	
	6	1	**122-7946**	2	VALVE GP-THROTTLE (VARIABLE ADJUSTABLE BOOM)	
					(EACH INCLUDES)	
		1	**115-6850**	1	SEAL-RING	
		1	**192-7117**	1	SEAL-O-RING	
	7	1	**206-5011**	1	SPOOL	
	8	1	**216-7523**	1	SPRING	
J	9	1	**033-6034**	1	SEAL-O-RING	
	10	1	**206-5010**	1	PLUG AS	
	11	1	**206-5007**	2	CONE	
	12	1	**202-8520**	2	SPRING	
	13	1	**206-5008**	2	PLUG	
Y	14	1	**206-5013**	2	VALVE GP-RELIEF (LINE, VARIABLE ADJUSTABLE BOOM)	699
	15	1	**214-5087**	1	SPOOL	
	16	1	**214-5088**	1	SPOOL	
J	17	1	**235-1838**	1	SEAL-O-RING	
J	18	1	**235-2175**	4	SEAL-RING	
					AVAILABLE REPAIR KIT(S):	
J			**261-4201**	1	KIT-SEAL (VA BOOM CONTROL VALVE)	
					(ALSO INCLUDES O-RING SEALS)	

J - KIT MARKED J SERVICES PART(S) MARKED J
M - METRIC PART
Y - SEPARATE ILLUSTRATION

251-8038 **VALVE GP-CONTROL** (contd.) **i05519563**

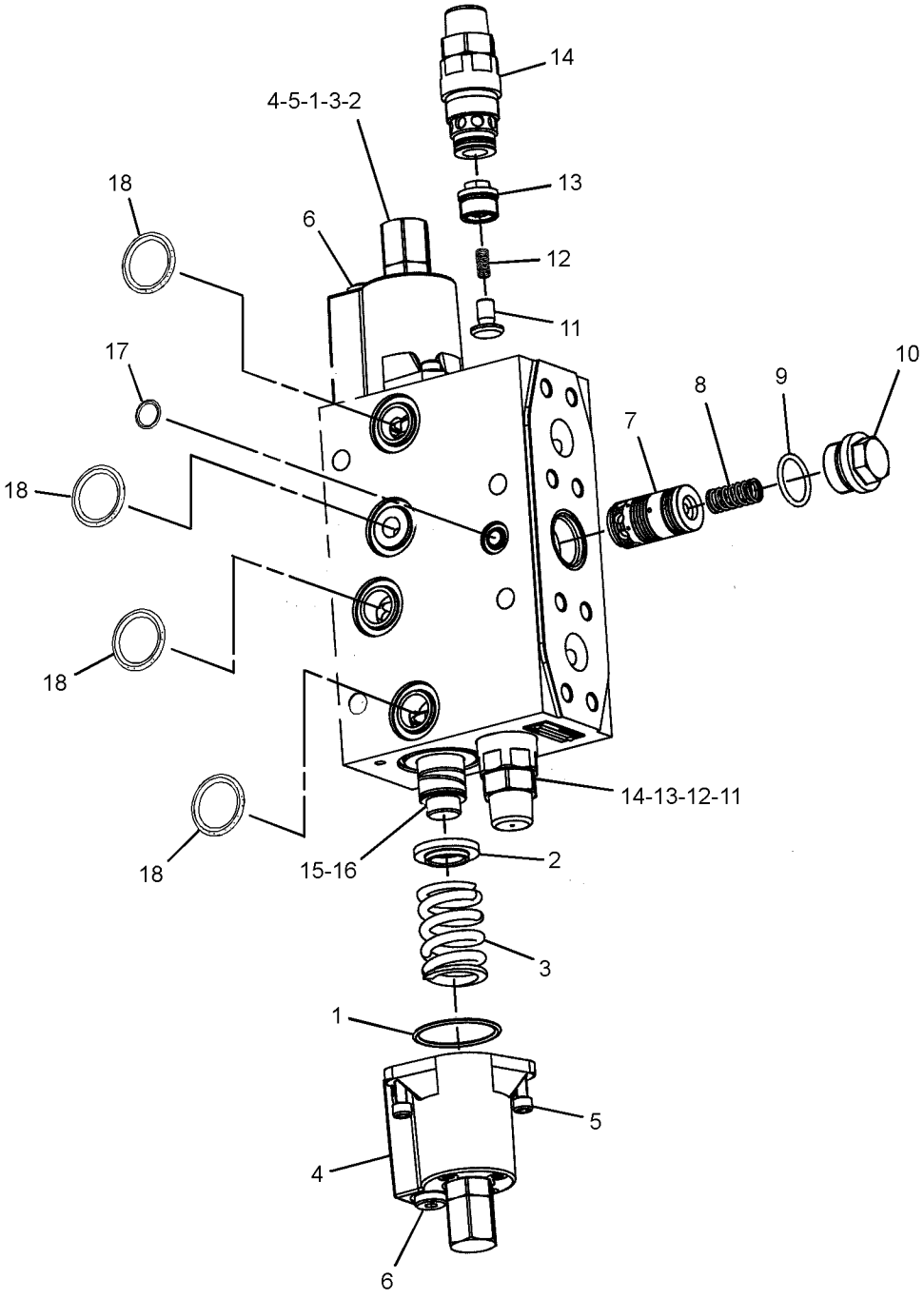

GRAPHIC #1 <END> g01365589

252-5984 VALVE GP-CONTROL—HYDRAULIC HAMMER

S/N: CH91-UP

PART OF 251-7932 VALVE & LINES AR-AUXILIARY

AN ATTACHMENT

SMCS-5051 **i05628770**

NOTE	REF NO	GRAPHIC REF	PART NUMBER	QTY	PART NAME 1 2 3 4 5 6 (PRODUCT LEVEL)	SEE PAGE
J	1	1	**3E-6788**	2	SEAL-O-RING	
	2	1	**114-0787**	2	SPRING-RETAINER	
	3	1	**202-8518**	2	SPRING	
J	4	1	**9X-4626**	1	SEAL-O-RING	
	5	1	**273-0847**	1	ACTUATOR	
M	6	1	**8T-2396**	2	BOLT (M6X1X60-MM)	
Y	7	1	**322-6342**	1	VALVE GP-SOLENOID & PRESS REDC (HAMMER ENABLE)	724
	8	1	**288-8033**	1	PLATE	
M	9	1	**8T-0269**	2	BOLT-SOCKET HEAD (M6X1X20-MM)	
	10	1	**288-8034**	1	SEAL-RING	
M	11	1	**236-9838**	1	BOLT-SOCKET HEAD (M6X1X8-MM)	
	12	1	**214-3402**	1	SPOOL	
	13	1	**202-8519**	1	SPRING	
J	14	1	**5P-7530**	1	SEAL-O-RING	
	15	1	**207-0416**	1	PLUG	
	16	1	**207-1716**	1	CONE	
	17	1	**202-8517**	1	SPRING	
	18	1	**273-0849**	1	PLUG AS	
	19	1	**190-9752**	1	PLUG AS	
N	20	1	**226-4195**	1	VALVE GP-RELIEF (LINE) (HAMMER)	
		1	**033-6034**	1	SEAL-O-RING	
		1	**061-8639**	1	SEAL-O-RING	
	21	1	**207-0805**	1	SPOOL	
	22	1	**207-3164**	1	PLUG GP	
		1	**5W-9413**	1	SEAL-O-RING	
	23	1	**288-8035**	1	SPOOL	
					(USE WITH VALVE BODY MARKED 0)	
					—OR—	
			288-8036	1	SPOOL	
					(USE WITH VALVE BODY MARKED 30)	
	24	1	**214-3403**	1	VALVE AS-CHECK (HYDRAULIC GENERATOR)	
J	25	1	**235-1838**	1	SEAL-O-RING	
J	26	1	**3P-1155**	2	SEAL-O-RING	
	27	1	**214-3413**	1	NOZZLE	
	28	1	**114-0207**	4	PLUG GP-CONTROL VALVE	
					(EACH INCLUDES)	
		1	**6V-5049**	1	SEAL-O-RING	
	29	1	**235-2175**	1	SEAL-RING	
					AVAILABLE REPAIR KIT(S):	
J			**204-4964**	1	KIT-SEAL (HAMMER CONTROL VALVE)	
N			**204-6354**	1	KIT-SEAL (HAMMER RELIEF VALVE)	
					(INCLUDES O-RINGS SEALS & BACKUP RINGS)	

J - KIT MARKED J SERVICES PART(S) MARKED J
M - METRIC PART
N - KIT MARKED N SERVICES PART(S) MARKED N
Y - SEPARATE ILLUSTRATION

252-5984 **VALVE GP-CONTROL** (contd.) **i05628770**

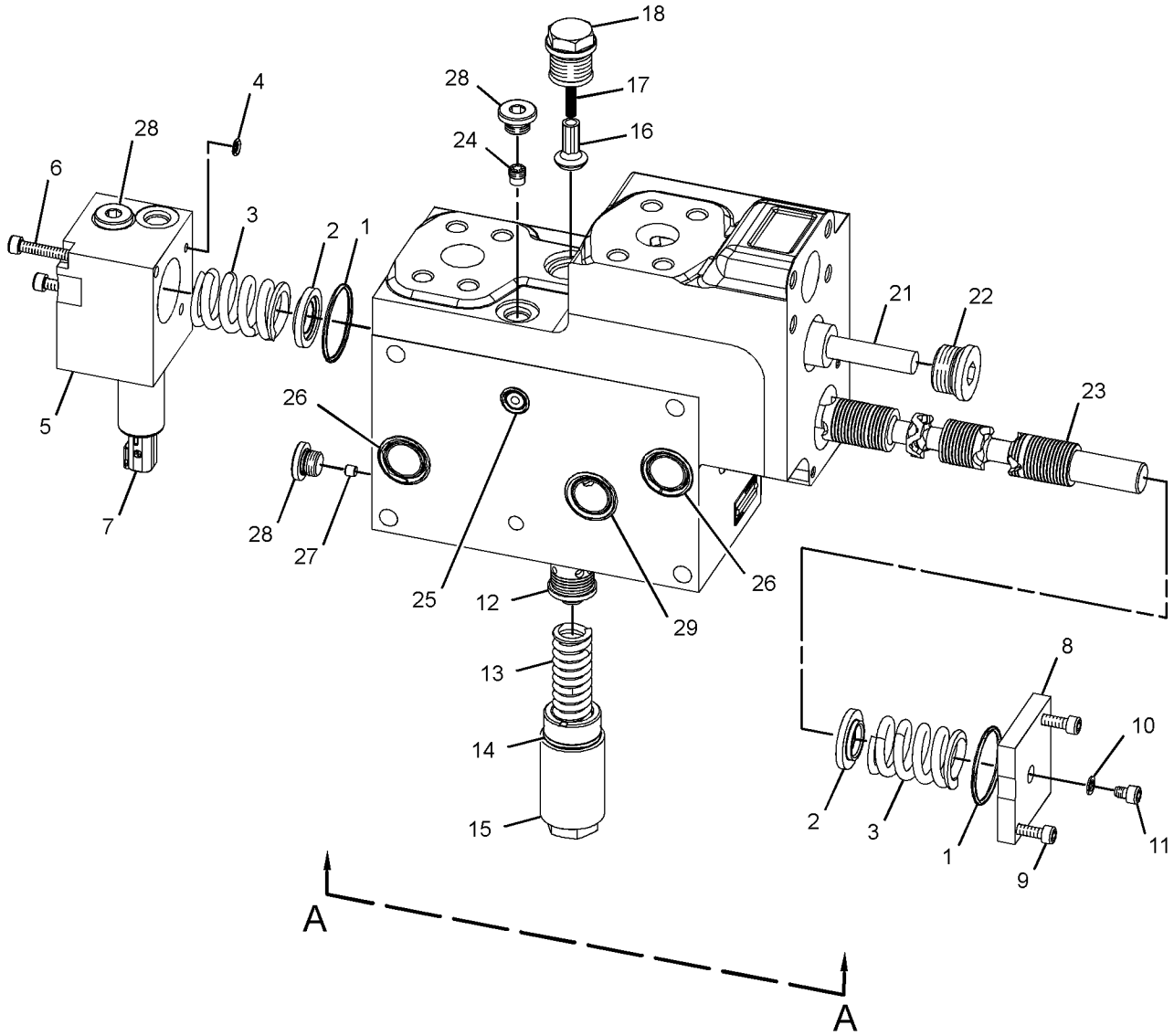

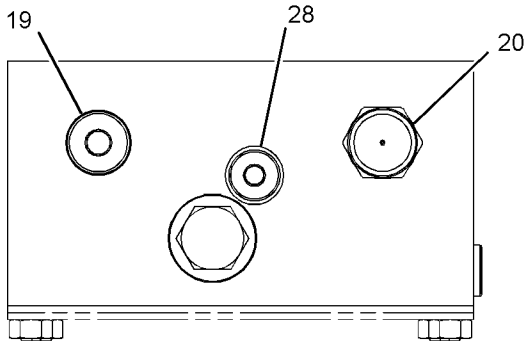

VIEW A-A

GRAPHIC #1 <END> g03584598

254-2639 VALVE GP-CONTROL—MEDIUM PRESSURE FUNCTION

S/N: CH91-UP

PART OF 254-2643 VALVE GP-SOLENOID

AN ATTACHMENT

SMCS-5051 **i05527497**

NOTE	REF NO	GRAPHIC REF	PART NUMBER	QTY	PART NAME 1 2 3 4 5 6 (PRODUCT LEVEL)	SEE PAGE
	1	1	**298-5048**	2	RETAINER-SPRING	
	2	1	**298-5049**	2	SPRING	
Y	3	1	**298-5050**	1	VALVE GP-SOLENOID (CONTROL ACTION)	715
Y	4	1	**298-5183**	1	VALVE GP-SOLENOID (MEDIUM PRESSURE FUNCTION)	716
	6	1	**298-5053**	2	PLUG AS	
					(EACH INCLUDES)	
		1	**8U-6457**	1	SEAL-O-RING	
	7	1	**316-6564**	4	SEAL-O-RING	
	8	1	**316-6565**	2	SEAL-O-RING	
	9	1	**316-6566**	1	SEAL-O-RING	
	10	1	**298-5227**	2	VALVE AS-RELIEF	
B	11	1	**327-5108**	2	VALVE AS-RELIEF (63-BAR, 914-PSI)	
B	12	1	**327-5109**	2	VALVE AS-RELIEF (80-BAR, 1160-PSI)	
B	13	1	**327-5110**	2	VALVE AS-RELIEF (125-BAR 1813-PSI)	
B	14	1	**327-5111**	2	VALVE AS-RELIEF (140-BAR, 2031-PSI)	
					PARTS SHOWN IN GRAPHIC(S) WITHOUT A REFERENCE NUMBER ARE NOT SERVICED SEPARATELY	

B - USE AS REQUIRED
Y - SEPARATE ILLUSTRATION

254-2639 **VALVE GP-CONTROL** (contd.) **i05527497**

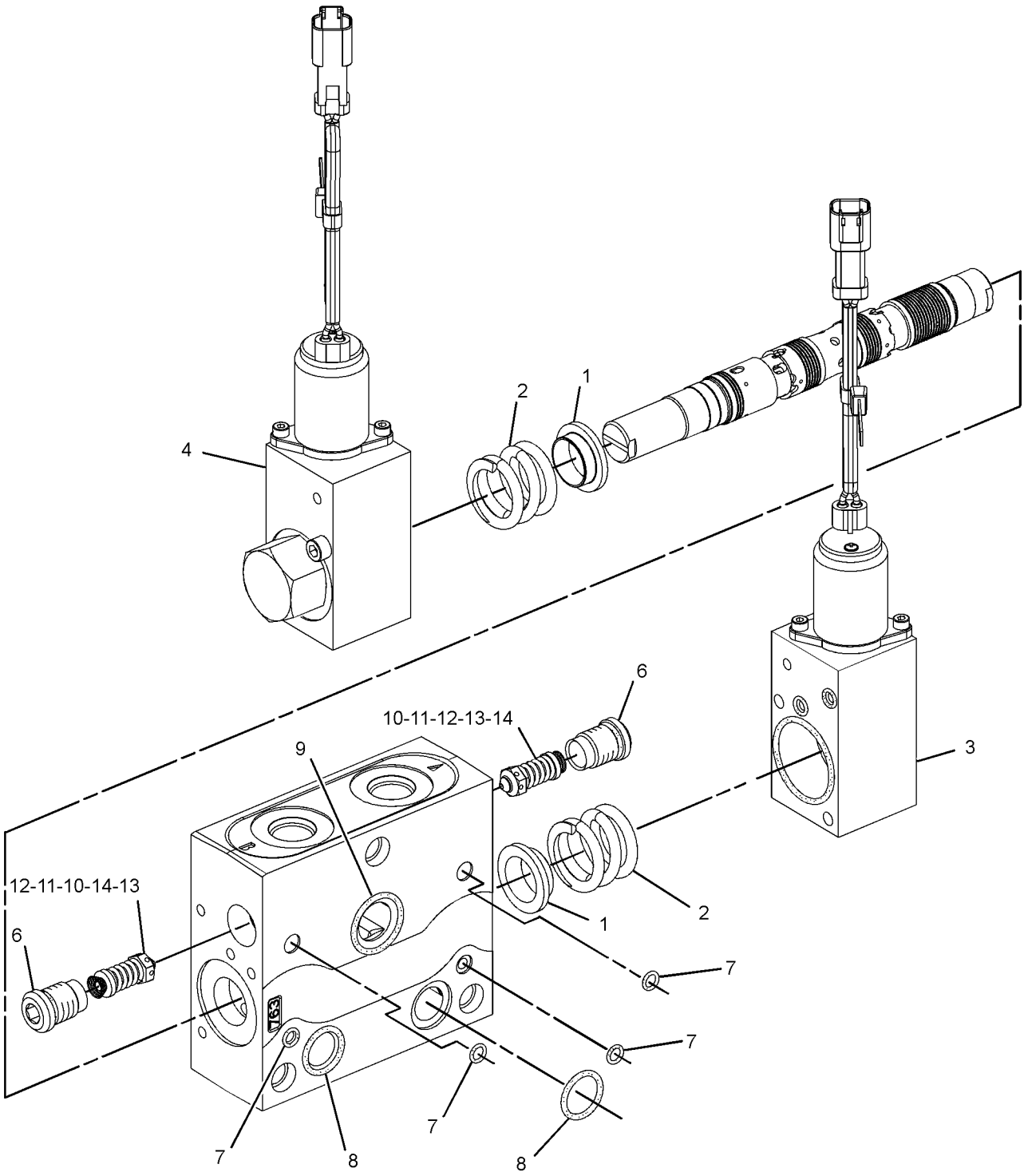

GRAPHIC #1 <END> g01675135

315-0490 VALVE GP-CONTROL

S/N: CH91-UP
PART OF 254-2643 VALVE GP-SOLENOID
AN ATTACHMENT

SMCS-5051 **i05560650**

NOTE	REF NO	GRAPHIC REF	PART NUMBER	QTY	PART NAME 1 2 3 4 5 6 (PRODUCT LEVEL)	SEE PAGE
Y	1	1	**315-0489**	1	VALVE GP-RELIEF (LOAD SENSING)	701
	2	1	**298-4479**	1	RETAINER-SPRING	
	3	1	**298-4480**	1	SPRING	
	4	1	**298-4481**	1	SPOOL	
	5	1	**9T-3928**	1	PLUG AS	
		1	**187-8001**	1	SEAL	
	6	1	**9T-3930**	1	PLUG AS	
		1	**162-6816**	1	SEAL	
	7	1	**316-6564**	4	SEAL-O-RING	
	8	1	**316-6565**	2	SEAL-O-RING	
	9	1	**316-6566**	1	SEAL-O-RING	

Y - SEPARATE ILLUSTRATION

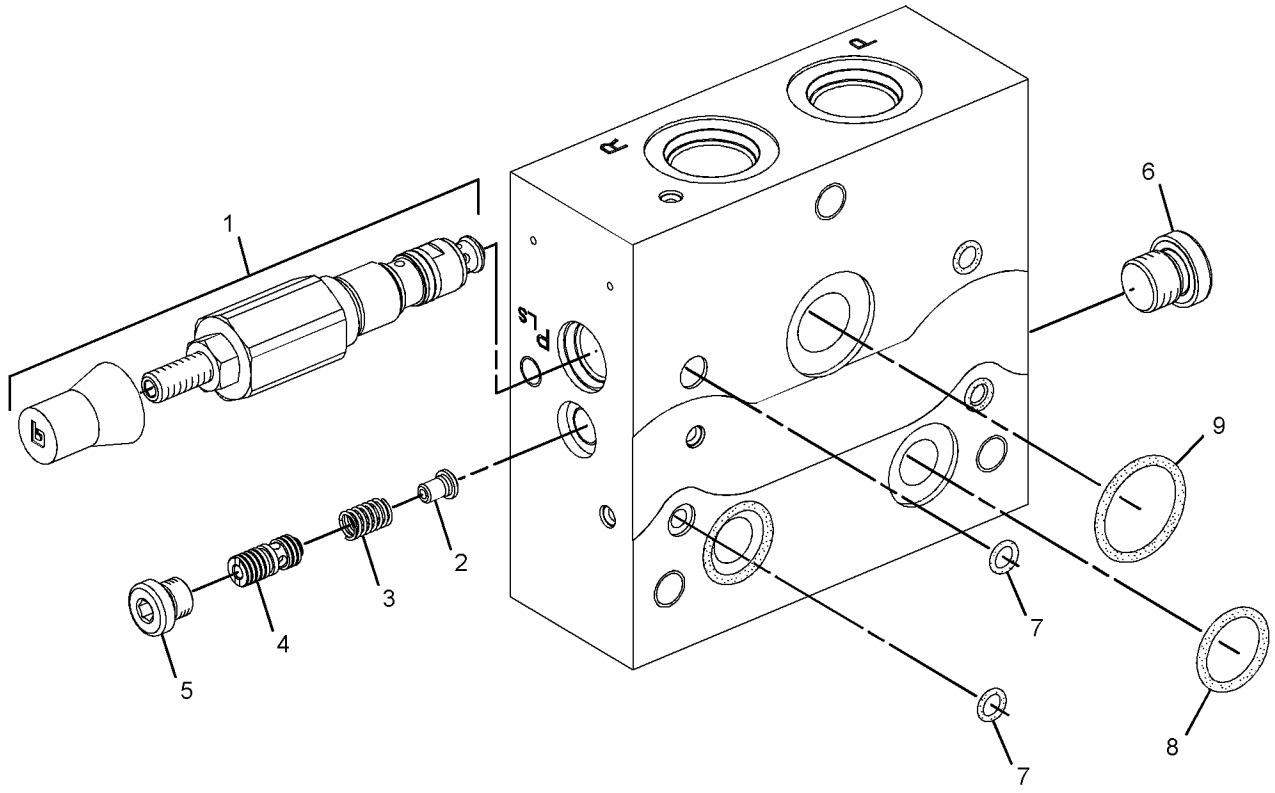

GRAPHIC #1 <END> g01874014

340-3327 VALVE GP-CONTROL—QUICK COUPLER

S/N: CH91-UP
PART OF 340-3235 VALVE & LINES GP
AN ATTACHMENT

SMCS-5051 **i06233835**

NOTE	REF NO	GRAPHIC REF	PART NUMBER	QTY	PART NAME 1 2 3 4 5 6 (PRODUCT LEVEL)	SEE PAGE
	1	1	**366-5873**	1	SOLENOID (QUICK COUPLER)	
	2	1	**236-8009**	1	VALVE AS-CHECK (QUICK COUPLER)	
	3	1	**451-0464**	2	PLUG	
	4	1	**366-5875**	1	ORIFICE	
	5	1	**187-8001**	2	SEAL	

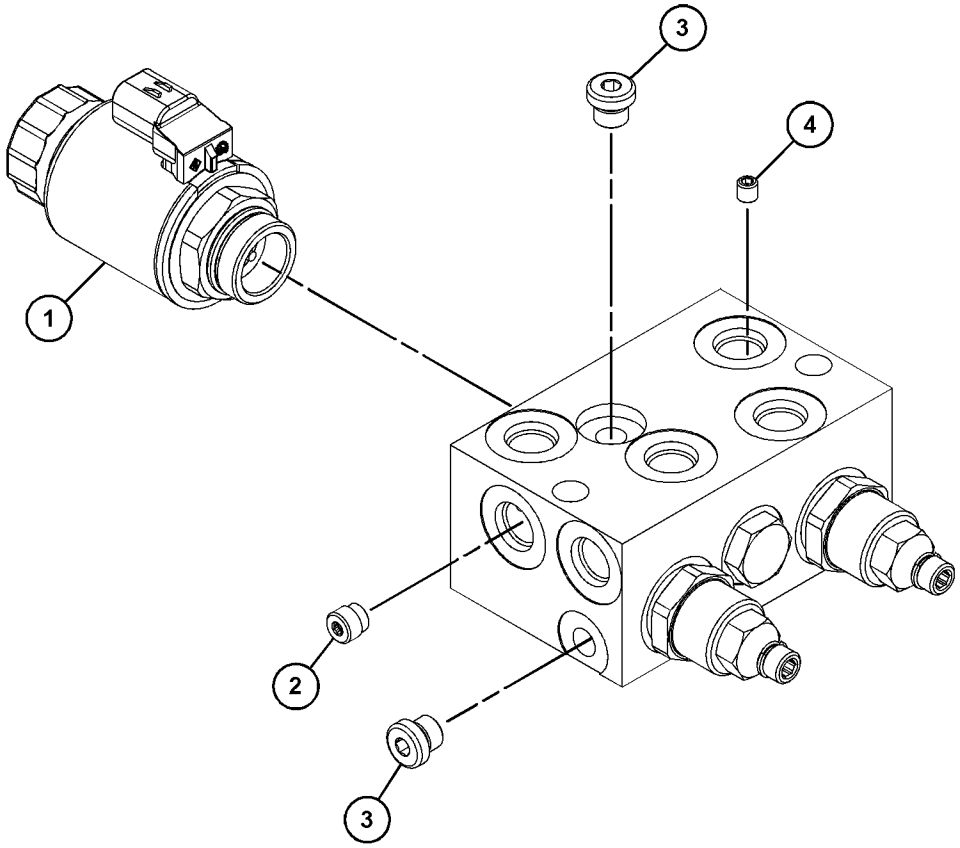

GRAPHIC #1 <END> g03724529

290-9589 VALVE GP-DIVERTER

S/N: CH91-UP

PART OF 417-8472, 417-8475, 539-2809, 539-2810 LINES GP-STICK

AN ATTACHMENT

SMCS-5066 **i05519651**

NOTE	REF NO	GRAPHIC REF	PART NUMBER	QTY	PART NAME 1 2 3 4 5 6 (PRODUCT LEVEL)	SEE PAGE
	1	1	**121-7196**	1	LEVER	

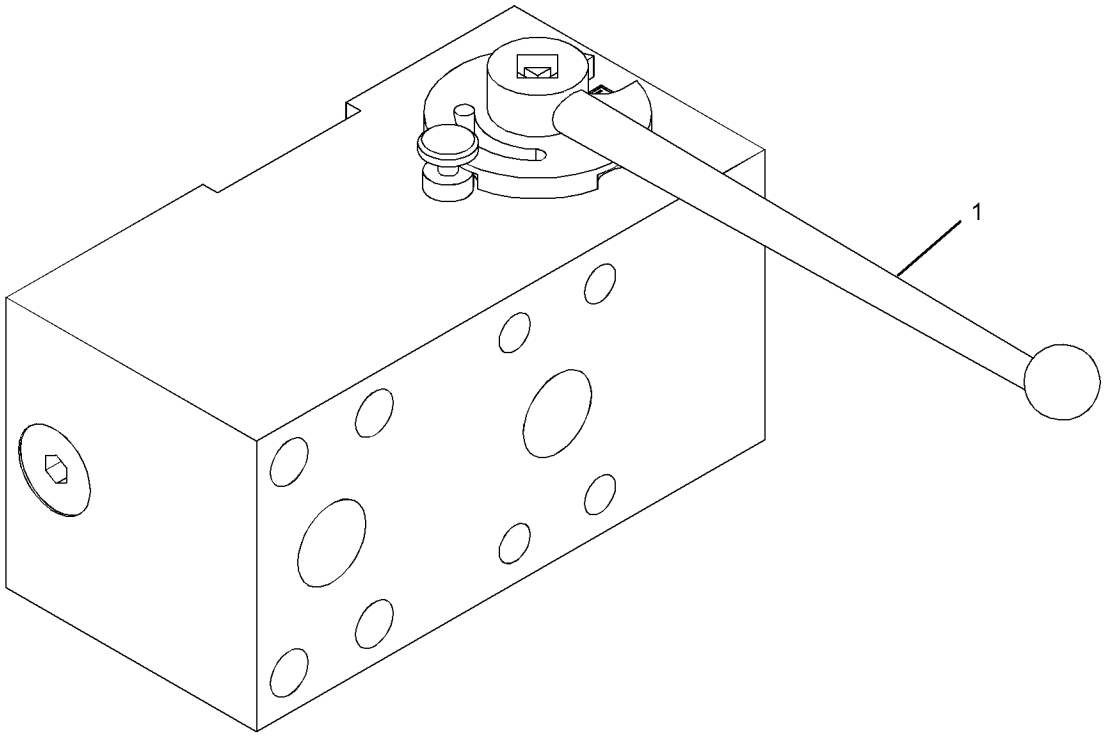

GRAPHIC #1 <END> g01402227

290-9591 VALVE GP-DIVERTER

S/N: CH91-UP

PART OF 417-8472, 417-8475, 539-2809, 539-2810 LINES GP-STICK

AN ATTACHMENT

SMCS-5066 **i05519652**

NOTE	REF NO	GRAPHIC REF	PART NUMBER	QTY	PART NAME 1 2 3 4 5 6 (PRODUCT LEVEL)	SEE PAGE
	1	1	**121-7196**	1	LEVER	

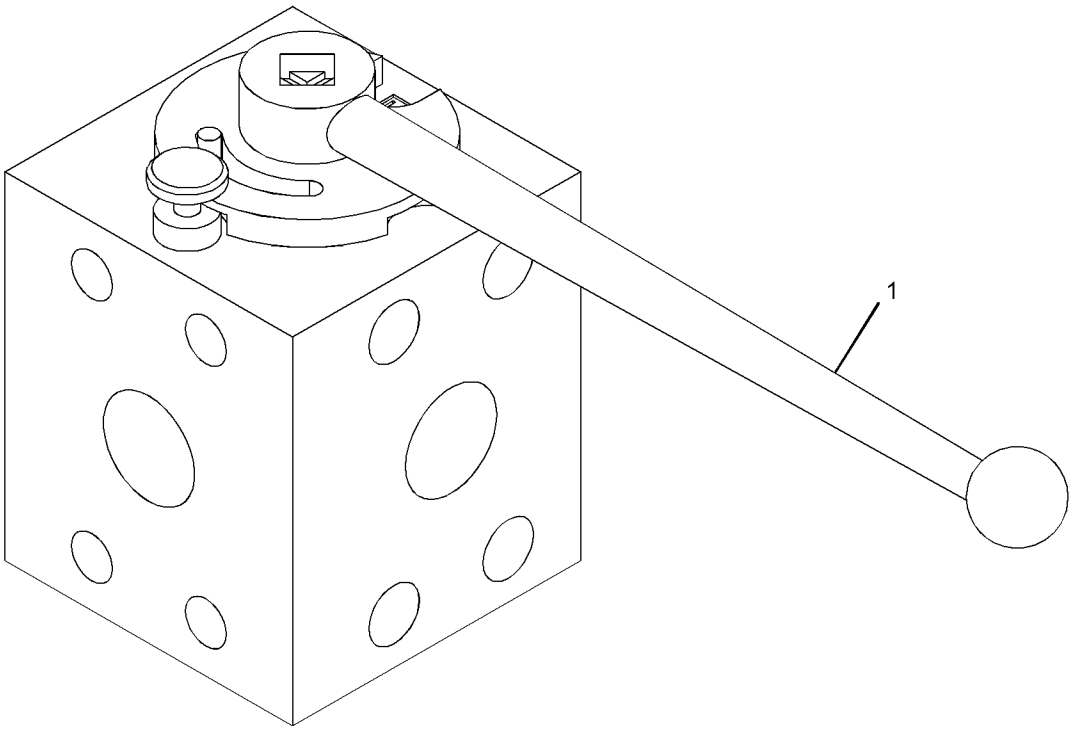

GRAPHIC #1 <END> g01402234

195-1907 VALVE GP-FLOW CONTROL

S/N: CH91-UP

PART OF 380-4720 LINES GP-LOAD CONTROL VALVE

AN ATTACHMENT

SMCS-5137 **i05510276**

NOTE	REF NO	GRAPHIC REF	PART NUMBER	QTY	PART NAME 1 2 3 4 5 6 (PRODUCT LEVEL)	SEE PAGE
	1	1	**161-6154**	1	SEAL-O-RING	

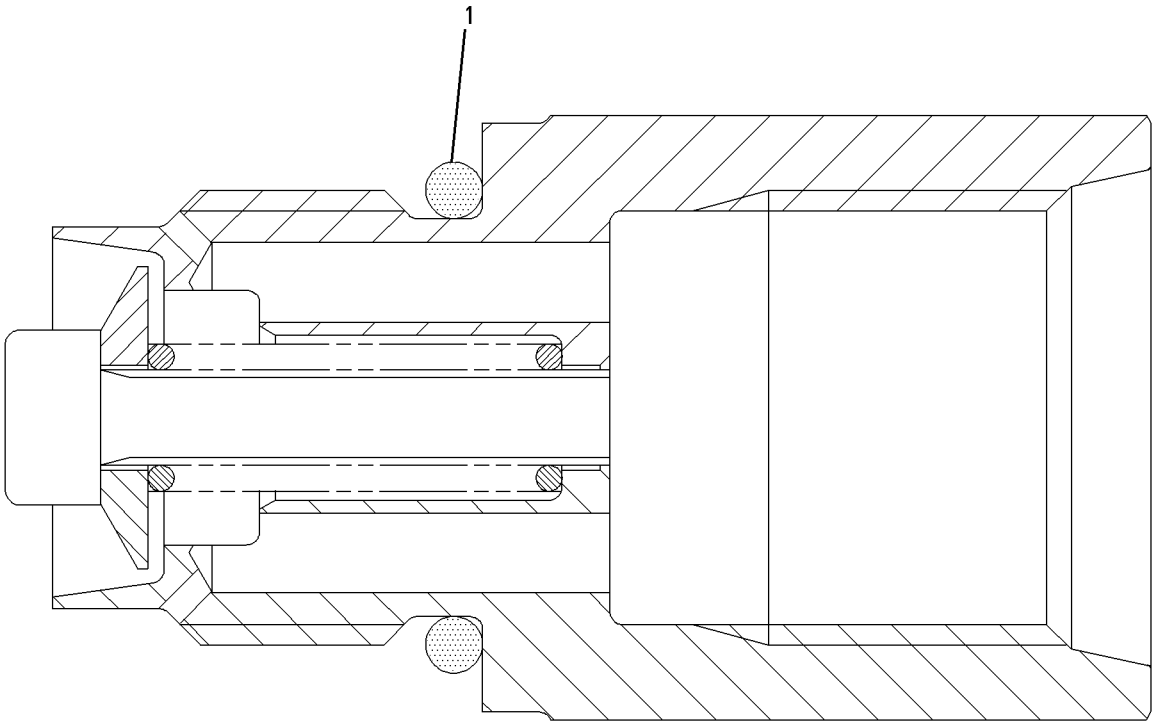

GRAPHIC #1 <END> g00770934

254-0489 VALVE GP-LOAD CONTROL

S/N: CH91-UP

PART OF 456-5835 VALVE & LINES GP-BOOM

AN ATTACHMENT

SMCS-5067, 5117, 5147, 5811 **i05513069**

NOTE	REF NO	GRAPHIC REF	PART NUMBER	QTY	PART NAME 1 2 3 4 5 6 (PRODUCT LEVEL)	SEE PAGE
	1	1	**179-4648**	1	BODY AS	
	2	1	**179-4650**	1	BODY	
	3	1	**179-4652**	1	VALVE AS-CHECK	
	4	1	**179-4654**	1	CONE	
	5	1	**179-4656**	1	BODY	
	6	1	**179-4657**	1	PISTON	
	7	1	**179-4658**	1	PISTON	
	8	1	**179-4169**	1	PLUG-ADJUSTMENT	
	9	1	**179-4661**	1	SPINDLE	
	10	1	**179-4666**	1	CONE	
	11	1	**179-4667**	1	POPPET	
	12	1	**179-4668**	1	RETAINER-BALL	
	13	1	**179-4669**	1	ADAPTER	
	14	1	**179-4670**	1	SPINDLE	
	15	1	**8U-6465**	1	SPRING	
	16	1	**179-4170**	1	SPRING	
	17	1	**179-4171**	1	SPRING	
	18	1	**179-4173**	1	SPRING	
J	19	1	**179-4176**	1	RING-BACKUP	
J	20	1	**179-4177**	1	RING-BACKUP	
J	21	1	**8U-7383**	1	SEAL-O-RING	
J	22	1	**161-6149**	2	SEAL-O-RING	
J	23	1	**6V-8399**	2	SEAL-O-RING	
J	24	1	**9X-7454**	1	SEAL-O-RING	
J	25	1	**005-8592**	1	SEAL-O-RING	
J	26	1	**099-8232**	1	SEAL-O-RING	
J	27	1	**4J-5267**	1	SEAL-O-RING	
J	28	1	**8U-7389**	1	RING	
	29	1	**3D-7943**	1	RING-RETAINING	
JM	30	1	**5W-9420**	1	LOCKNUT (M8X1.25-THD)	
J	31	1	**179-4180**	1	LOCKNUT	
	32	1	**8U-1218**	1	CAP-NUT	
					AVAILABLE REPAIR KIT(S):	
J			**179-4671**	1	KIT-SEAL (LOAD CONTROL VALVE)	

J - KIT MARKED J SERVICES PART(S) MARKED J
M - METRIC PART

254-0489 **VALVE GP-LOAD CONTROL** (contd.) **i05513069**

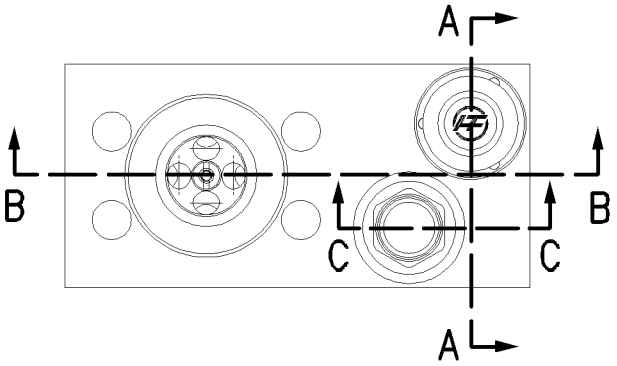

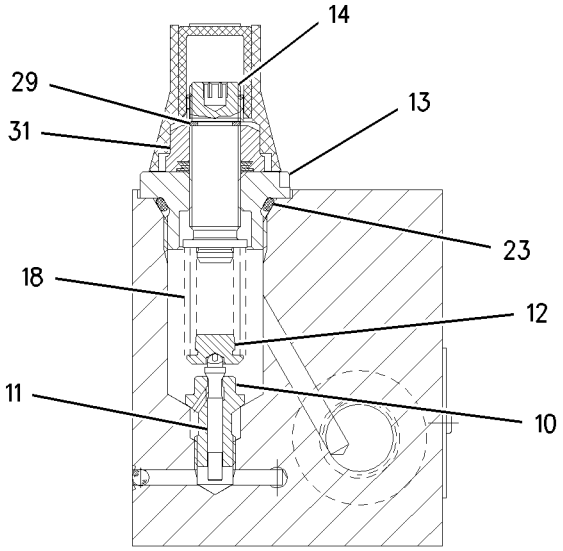

SECTION A-A

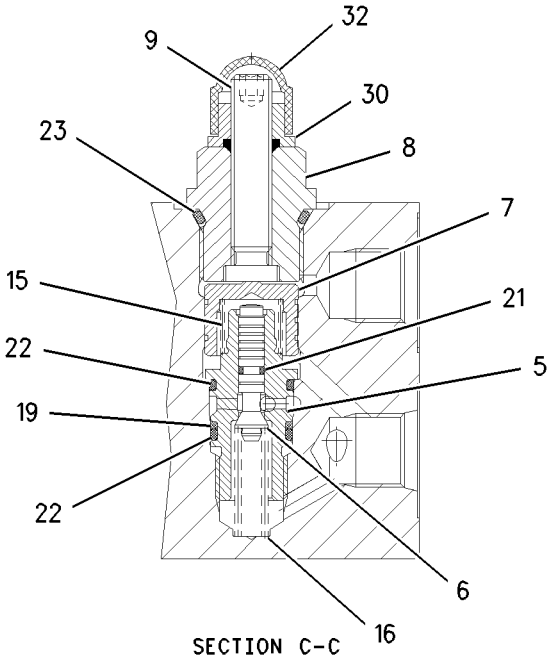

SECTION C-C

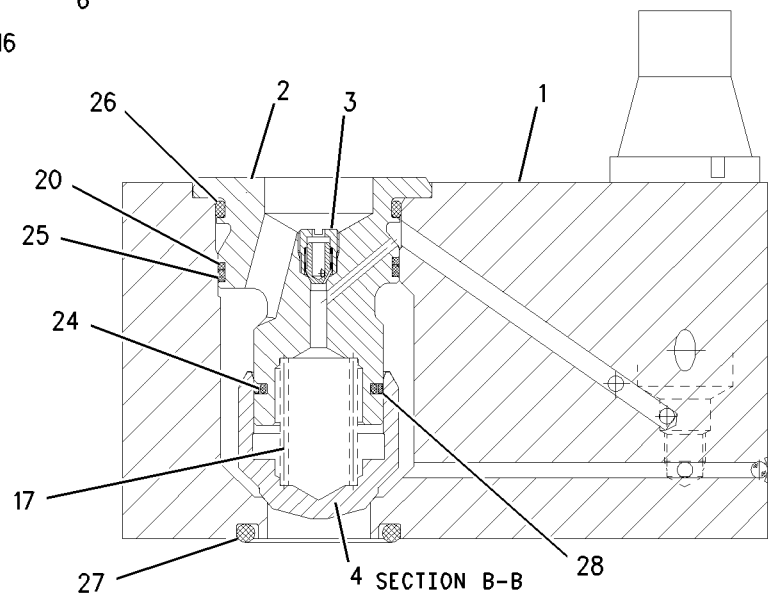

SECTION B-B

GRAPHIC #1 <END> g00922121

254-2675 VALVE GP-LOAD CONTROL

S/N: CH91-UP

PART OF 380-4720 LINES GP-LOAD CONTROL VALVE

AN ATTACHMENT

SMCS-5067, 5117, 5147, 5811 **i05492872**

NOTE	REF NO	GRAPHIC REF	PART NUMBER	QTY	PART NAME 1 2 3 4 5 6 (PRODUCT LEVEL)	SEE PAGE
	1	1	**9S-8004**	2	PLUG (9/16-18-THD)	
	2	1	**3J-1907**	2	SEAL-O-RING	
	3	1	**9S-8005**	1	PLUG (3/4-16-THD)	
	4	1	**3K-0360**	1	SEAL-O-RING	
	5	1	**9S-8006**	1	PLUG (7/8-14-THD)	
	6	1	**2M-9780**	1	SEAL-O-RING	
	7	1	**148-9037**	1	HOUSING	
	8	1	**148-9042**	1	PISTON	
	9	1	**148-9044**	1	SPINDLE	
	10	1	**148-9045**	1	SHIM (4-MM THK)	
	11	1	**148-9047**	1	ROD	
	12	1	**148-9050**	1	RETAINER	
	13	1	**148-9051**	1	CONE	
	14	1	**148-9053**	1	SPRING	
	15	1	**148-9054**	1	SPRING	
	16	1	**6V-5326**	1	SEAL-O-RING	
M	17	1	**5W-9420**	1	LOCKNUT (M8X1.25-THD)	
	18	1	**5W-5066**	1	BALL	
	19	1	**8U-1218**	1	CAP-NUT	
	20	1	**7J-9933**	1	SEAL-O-RING	
	21	1	**6V-5391**	1	SEAL-O-RING	
	22	1	**1R-5318**	1	SEAL-O-RING	
	23	1	**4J-5267**	1	SEAL-O-RING	

PARTS SHOWN IN GRAPHIC(S) WITHOUT A REFERENCE NUMBER ARE NOT SERVICED SEPARATELY

M - METRIC PART

254-2675 **VALVE GP-LOAD CONTROL** (contd.) **i05492872**

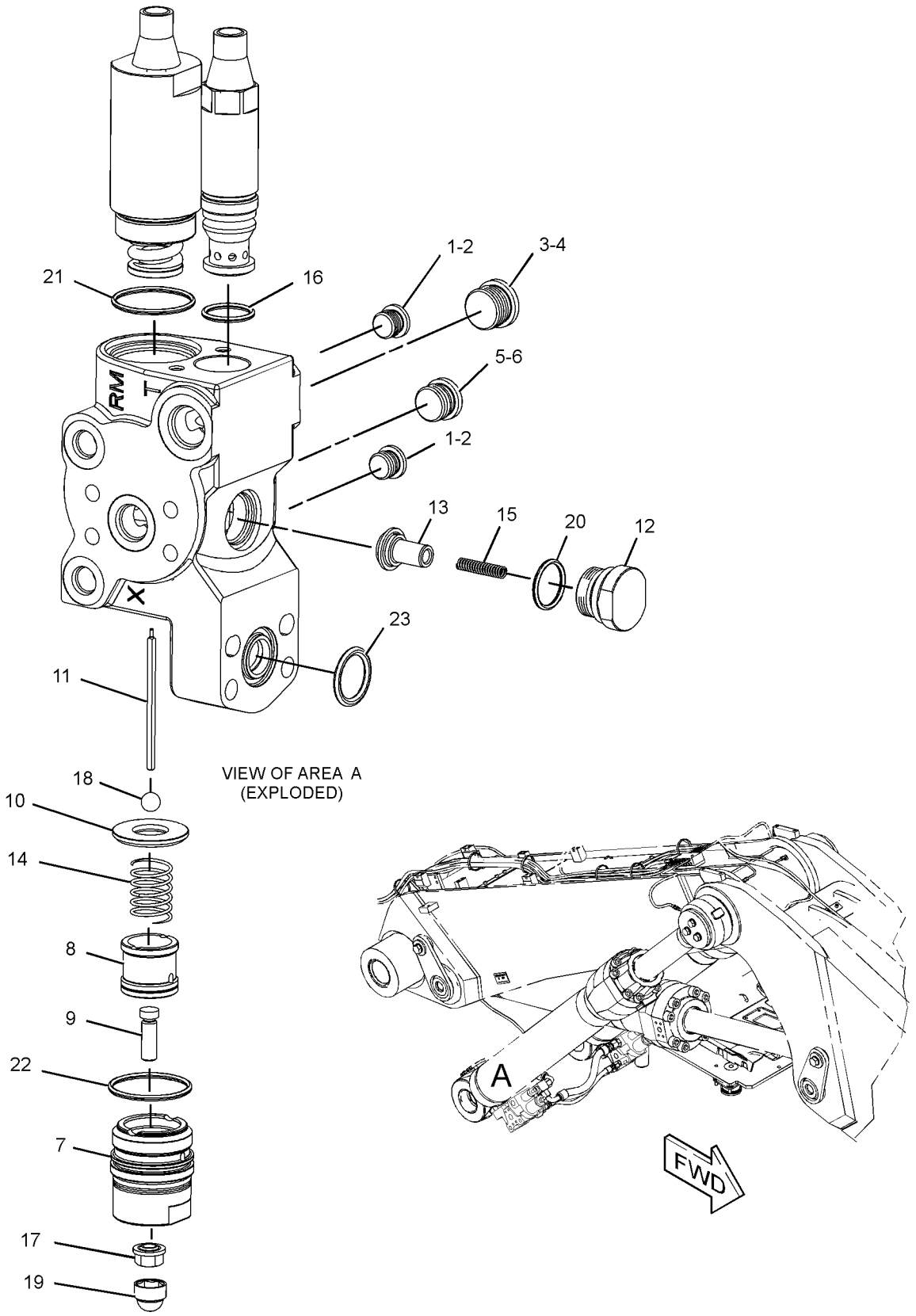

GRAPHIC #1 <END> g03088539

340-6790 VALVE GP-MAIN CONTROL

S/N: CH91-UP

PART OF 393-1539 VALVE & MTG GP-MAIN CONTROL

ALSO AN ATTACHMENT

SMCS-5051 **i07449188**

NOTE	REF NO	GRAPHIC REF	PART NUMBER	QTY	PART NAME 1 2 3 4 5 6 (PRODUCT LEVEL)	SEE PAGE
	1	1	**194-7841**	1	PLATE-COVER	
M	2	1	**8T-0271**	4	BOLT-SOCKET HEAD (M10X1.5X35-MM)	
H	3	2	**3E-6788**	10	SEAL-O-RING	
	4	2	**114-0787**	10	SPRING-RETAINER	
	5	2	**224-8831**	8	SPRING	
Y	6	2	**265-3742**	8	ACTUATOR GP-HYDRAULIC	329
M	7	2	**8T-2922**	20	BOLT-SOCKET HEAD (M6X1X65-MM)	
	8	2	**122-7946**	6	VALVE GP-THROTTLE (BUCKET, BLADE/STB, TRAVEL)	
					(EACH INCLUDES)	
		2	**115-6850**	1	SEAL-RING	
		2	**192-7117**	1	SEAL-O-RING	
J	9	2	**215-1187**	4	VALVE GP-THROTTLE (BOOM, STICK)	
					(EACH INCLUDES)	
N		2	**115-6850**	1	SEAL-RING	
N		2	**192-7117**	1	SEAL-O-RING	
	10	1	**206-7126**	4	SPOOL	
	11	1	**423-3064**	1	SPOOL AS	
	12	1	**202-8523**	5	SPRING	
	13	1	**265-3784**	5	PLUG AS	
	14	1	**114-0203**	10	CONE	
	15	1	**114-0204**	10	SPRING	
	16	1	**114-0205**	10	PLUG	
L	17	1	**114-0215**	1	PLUG GP-CONTROL VALVE	
	18	1	**287-4944**	2	ADAPTER AS	
					(EACH INCLUDES)	
		1	**114-2943**	1	KIT-SEAL (MAIN CONTROL VALVE PLUGS)	
					(INCLUDES O-RING SEALS & BACKUP RINGS)	
Y	19	1	**114-0217**	7	VALVE GP-RELIEF (LINE) (MAIN)	694
	20	1	**219-5628**	1	ADAPTER AS	
		1	**5P-3456**	1	SEAL-O-RING	
		1	**5P-8356**	1	SEAL-O-RING	
		1	**115-7764**	2	RING-BACKUP	
	21	1	**272-4873**	1	VALVE GP-FLOW CONTROL	
		1	**206-7127**	1	KIT-SEAL (FLOW CONTROL VALVE)	
					(INCLUDES O-RING SEALS & BACKUP RINGS)	
Y	22	1	**141-7812**	1	VALVE GP-RELIEF (SIGNAL LIMITER)	697
	23	1	**189-3016**	1	PILOT	
	24	1	**234-9356**	1	ORIFICE-SHUTTLE	
M	25	1	**189-3014**	1	SCREW	
	26	1	**206-7094**	1	SPOOL	
	27	1	**206-7106**	1	SPRING-RETAINER	
	28	1	**202-8522**	1	SPRING	
	29	1	**190-9752**	4	PLUG AS	
	30	1	**206-7124**	1	VALVE AS-CHECK	
	31	1	**206-7125**	1	VALVE AS-CHECK	
					(EACH VALVE AS INCLUDES)	
		1	**8C-3078**	1	SEAL-O-RING	

340-6790 **VALVE GP-MAIN CONTROL (**contd.**)** **i07449188**

NOTE	REF NO	GRAPHIC REF	PART NUMBER	QTY	PART NAME 1 2 3 4 5 6 (PRODUCT LEVEL)	SEE PAGE
	32	2	**189-6159**	1	SPOOL	
	33	2	**287-5321**	1	SPOOL AS	
	34	2	**215-1193**	1	SPOOL	
	35	2	**189-6154**	1	SPOOL	
	36	2	**421-1952**	1	SPOOL AS	
H	37	1	**235-1838**	2	SEAL-O-RING	
H	38	1	**235-2175**	5	SEAL-RING	
H	39	1	**7X-4744**	2	SEAL-O-RING	
	40	1	**122-7945**	1	NOZZLE	
	41	1	**9S-8004**	4	PLUG (9/16-18-THD)	
	42	1	**3J-1907**	4	SEAL-O-RING	
	43	1	**9S-8008**	1	PLUG (1-1/16-12-THD)	
	44	1	**3D-2824**	1	SEAL-O-RING	
	45	1	**234-9357**	1	PLATE-COVER	
M	46	1	**160-8758**	4	BOLT-SOCKET HEAD (M10X1.5X55-MM)	
	47	2	**309-0702**	2	SPRING	
Y	48	2	**309-0703**	1	ACTUATOR GP-HYDRAULIC	330
Y	49	2	**314-8467**	1	ACTUATOR GP-HYDRAULIC	331
	50	2	**314-8468**	1	VALVE-BREATHER	
					AVAILABLE GASKET KIT(S):	
L			**114-2943**	1	KIT-SEAL (MAIN CONTROL VALVE PLUGS)	
					(INCLUDES O-RING SEALS & BACKUP RINGS)	
JN			**192-0705**	1	KIT-SEAL (THROTTLE VALVE)	
					(ALSO INCLUDES RING SEALS & O-RING SEALS)	
H			**266-9565**	1	KIT-SEAL (MAIN CONTROL VALVE)	
					(ALSO INCLUDES O-RING SEALS)	

H - KIT MARKED H SERVICES PART(S) MARKED H
J - KIT MARKED J SERVICES PART(S) MARKED J
L - KIT MARKED L SERVICES PART(S) MARKED L
M - METRIC PART
N - KIT MARKED N SERVICES PART(S) MARKED N
Y - SEPARATE ILLUSTRATION

340-6790 **VALVE GP-MAIN CONTROL** (contd.) **i07449188**

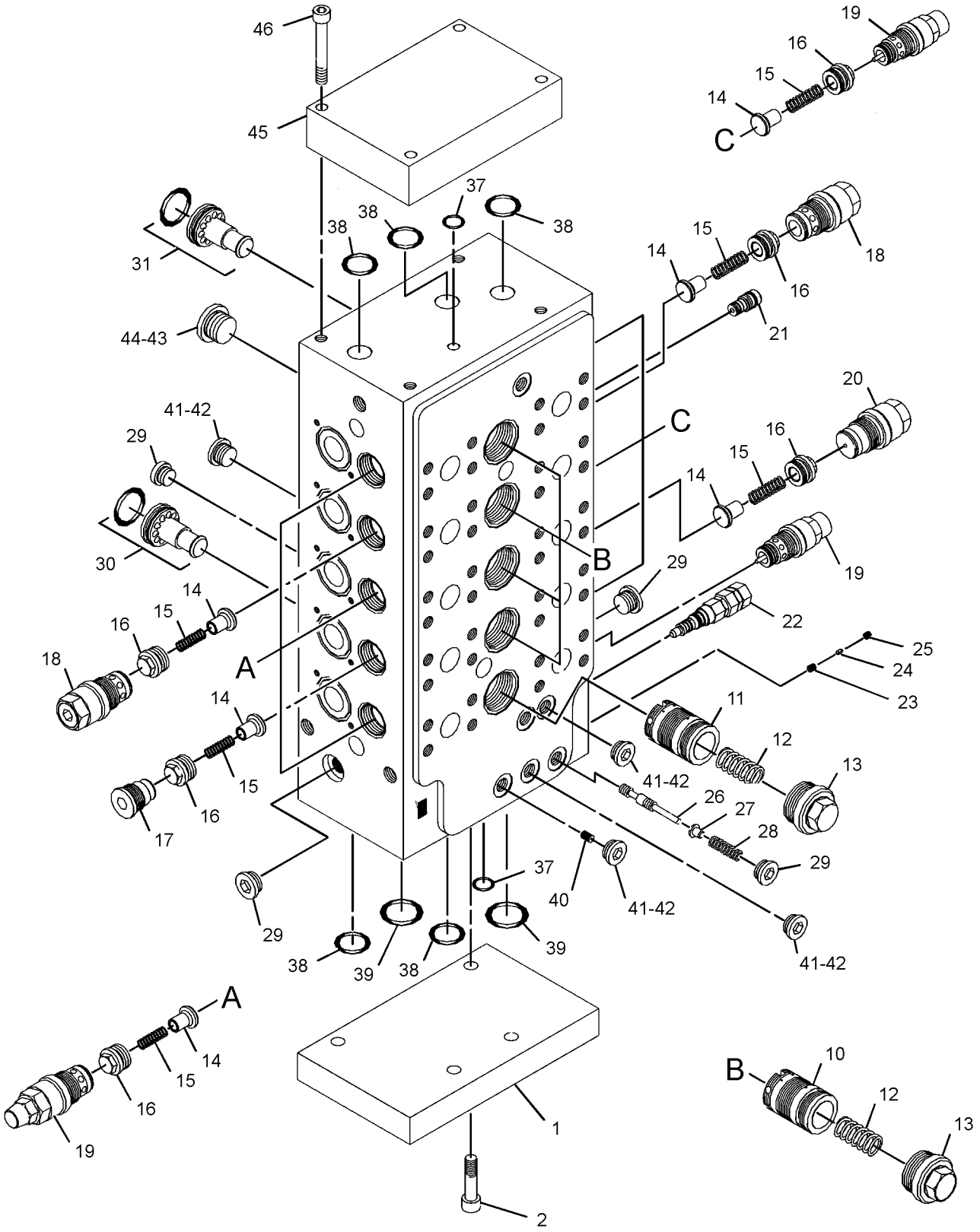

GRAPHIC #1 g03340700

340-6790 **VALVE GP-MAIN CONTROL (**contd.**)** **i07449188**

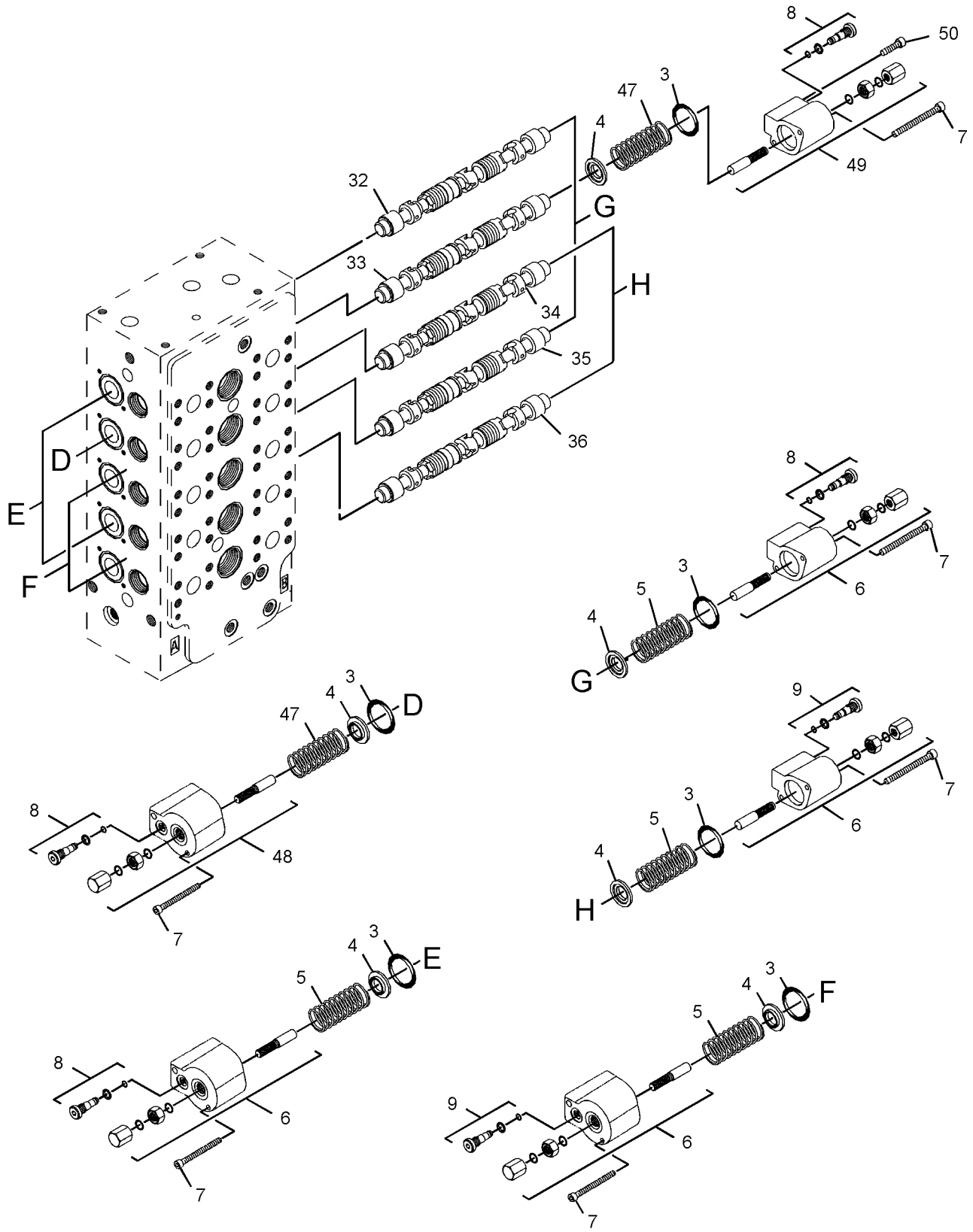

GRAPHIC #2 <END> g03340703

389-2407 VALVE GP-MANUAL–AUXILIARY, SHUTOFF

S/N: CH91-UP

PART OF 418-8767, 418-8768 LINES GP-STICK

AN ATTACHMENT

SMCS-1329, 5001, 5130 **i07279897**

NOTE	REF NO	GRAPHIC REF	PART NUMBER	QTY	PART NAME 1 2 3 4 5 6 (PRODUCT LEVEL)	SEE PAGE
	1	1	**549-0809**	1	HANDLE-VALVE	
	2	1	**3J-1907**	1	SEAL-O-RING	
	3	1	**360-3692**	1	PLUG	

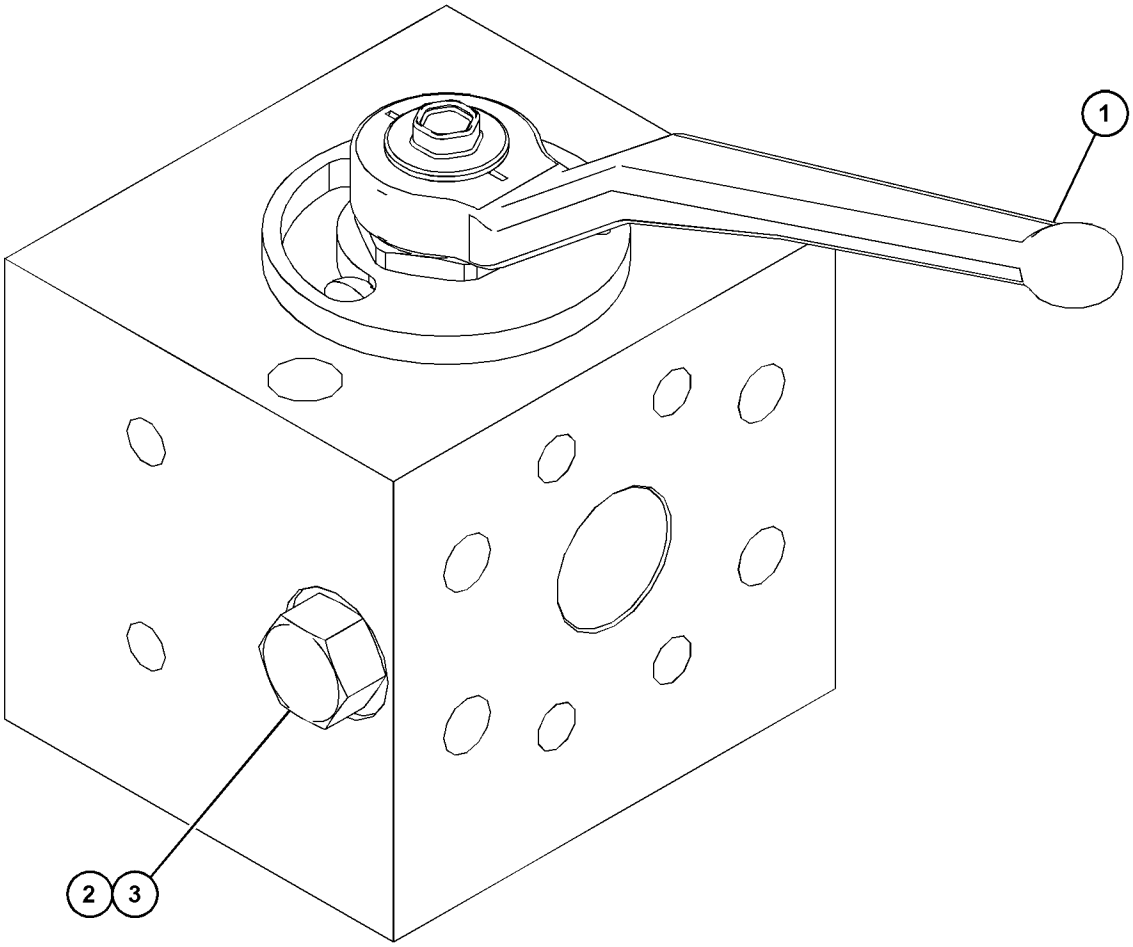

GRAPHIC #1 <END> g06272709

245-3664 VALVE GP-MOTOR CONTROL—PRESSURE, FLOW COMPENSATOR

S/N: CH91-UP
PART OF 245-3661 HEAD GP-MOTOR
ALSO AN ATTACHMENT

SMCS-5455 **i05513210**

NOTE	REF NO	GRAPHIC REF	PART NUMBER	QTY	PART NAME 1 2 3 4 5 6 (PRODUCT LEVEL)	SEE PAGE
	1	1	**252-8921**	1	HOUSING-CONTROL	
	2	1	**245-3668**	1	BUSHING	
	3	1	**245-3669**	1	PISTON	
	4	1	**124-9887**	1	BUSHING	
	5	1	**124-9948**	1	RETAINER	
	6	1	**242-9251**	1	SPRING-COLLAR	
	7	1	**124-9950**	1	SPRING	
	8	1	**245-3671**	1	SPRING	
	9	1	**124-9888**	1	SPRING	
	10	1	**7X-8592**	1	SEAL-O-RING	
M	11	1	**136-4184**	4	BOLT-SOCKET HEAD (M8X1.25X40-MM)	
	12	1	**209-9719**	1	PLUG AS	
	13	1	**095-0933**	1	RING-RETAINING	
M	14	1	**145-8746**	1	SCREW (M6X30-MM)	
	15	1	**125-3553**	1	DOWEL	
M	16	1	**9T-3853**	1	LOCKNUT (M6X1-THD)	
	17	1	**123-9769**	5	PLUG	
	18	1	**245-3672**	1	PISTON	
	19	1	**242-2608**	1	BUSHING-CONTROL	
	20	1	**242-2609**	2	RETAINER-SPRING	
	21	1	**242-2610**	1	PLUG	
	22	1	**242-2611**	1	SPRING	
M	23	1	**242-2612**	1	SETSCREW (M6X0.5X30-MM)	
	24	1	**033-6041**	1	SEAL-O-RING	
	25	1	**6E-4928**	1	LOCKNUT-SEALING	

M - METRIC PART

245-3664 **VALVE GP-MOTOR CONTROL (**contd.**)** **i05513210**

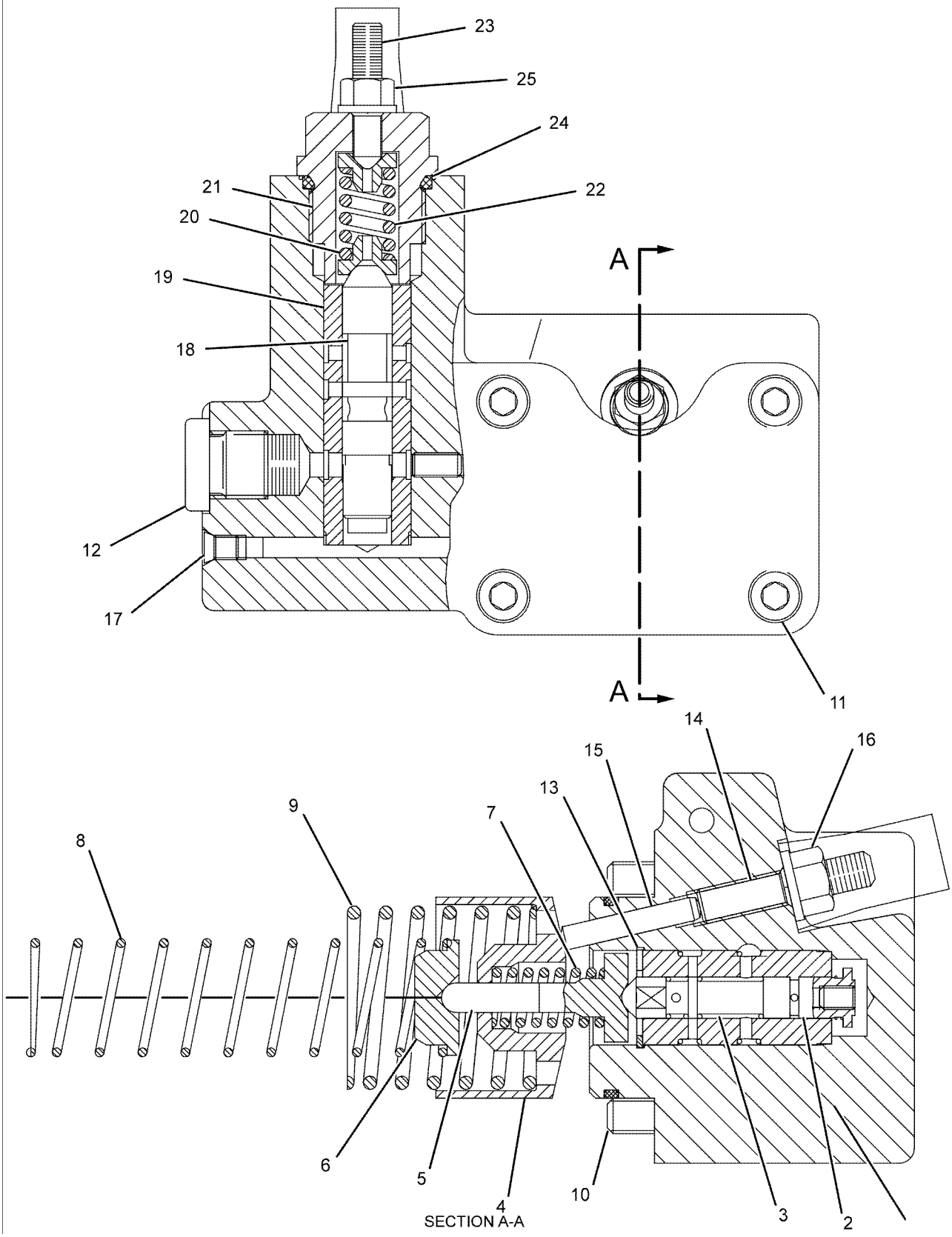

SECTION A-A

GRAPHIC #1 g01047951

<END>

245-3665 VALVE GP-MOTOR CONTROL–TRAVEL

S/N: CH91-UP
PART OF 245-3661 HEAD GP-MOTOR
ALSO AN ATTACHMENT

SMCS-5455 **i05513211**

NOTE	REF NO	GRAPHIC REF	PART NUMBER	QTY	PART NAME 1 2 3 4 5 6 (PRODUCT LEVEL)	SEE PAGE
	1	1	**245-3673**	1	BODY	
	2	1	**123-5798**	1	SEAT	
	3	1	**142-1412**	1	VALVE	
	4	1	**123-5799**	1	SEAT	
M	5	1	**6V-8200**	4	BOLT-SOCKET HEAD (M12X1.75X35-MM)	
	6	1	**4J-0522**	1	SEAL-O-RING	

M - METRIC PART

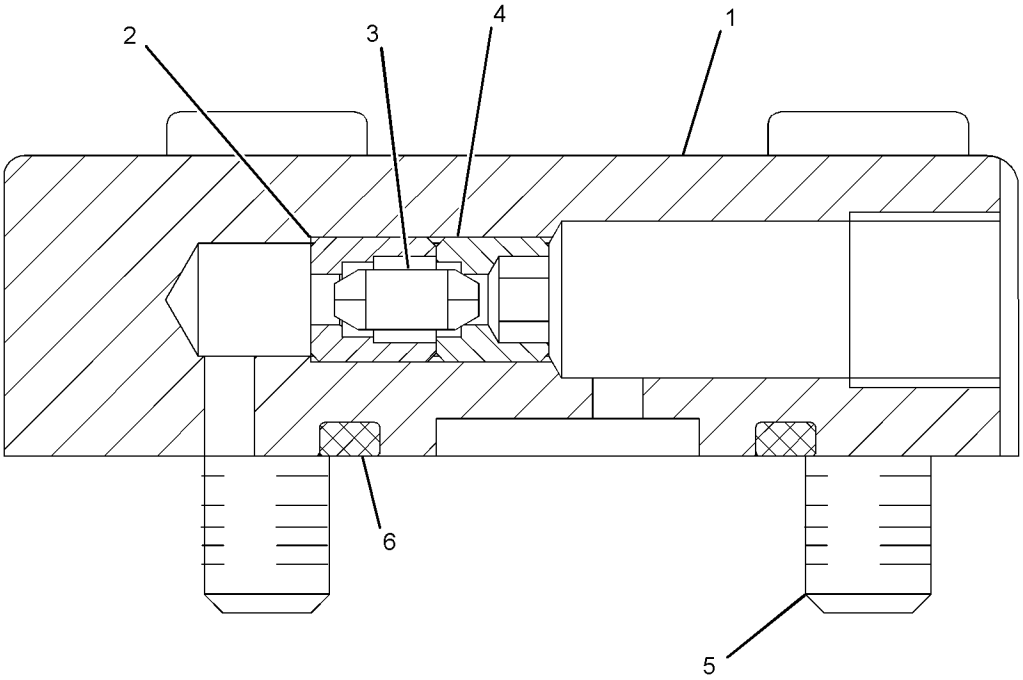

GRAPHIC #1 <END> g01922999

243-4046 VALVE GP-PILOT—JOYSTICK

S/N: CH91-UP

PART OF 481-9615, 539-6714 CONTROL GP-JOYSTICK, 260-5112 CONTROL GP-PILOT OPERATED HYD

ALSO AN ATTACHMENT

SMCS-5059 **i07161983**

NOTE	REF NO	GRAPHIC REF	PART NUMBER	QTY	PART NAME 1 2 3 4 5 6 (PRODUCT LEVEL)	SEE PAGE
HZ	1	1		1	UNIVERSAL JOINT	
HZ	1A	1		1	SHIM (0.1-MM THK)	
HZ	1B	1		1	SHIM (0.2-MM THK)	
HZ	1C	1		1	SHIM (0.5-MM THK)	
HZ	1D	1		1	SHIM (1-MM THK)	
HZ	1E	1		1	SHIM (0.15-MM THK)	
	2	1	**122-1904**	1	PLATE	
	3	1	**207-5209**	1	KIT-PLUNGER (JOYSTICK CONTROL) (PILOT VALVE)	
					(KIT INCLUDES TWO EACH OF PLUNGER GUIDES, FULL PLUNGERS, PLATES, & SNAP RINGS)	
	4	1	**205-4015**	1	KIT-PLUNGER (PILOT VALVE)	
					(KIT INCLUDES TWO EACH OF PLUNGER GUIDES, FULL PLUNGERS, PLATES, & SNAP RINGS)	
JZ	5	1		1	RETAINER-WASHER	
JZ	5A	1		1	RETAINER-SPRING	
JZ	5B	1		1	SPRING	
JZ	5C	1		3	SHIM	
JZ	5D	1		1	SPOOL	
JZ	5E	1		1	PIN	
JZ	5F	1		2	SHIM	
JZ	5G	1		1	SPRING	
LZ	6	1		1	RETAINER-WASHER	
LZ	6A	1		1	RETAINER-SPRING	
LZ	6B	1		1	SPRING	
LZ	6C	1		3	SHIM	
LZ	6D	1		1	SPOOL	
LZ	6E	1		1	PIN	
LZ	6F	1		2	SHIM	
LZ	6G	1		1	SPRING	
	7	1	**205-5690**	2	SPRING	
NZ	8	1		2	PIN	
NZ	8A	1		1	SEAL-O-RING	
NZ	8B	1		1	SEAL-O-RING	
NZ	8C	1		1	SEAL-O-RING	
NZ	8D	1		1	BOLT	
					AVAILABLE REPAIR KIT(S):	
H			**217-3850**	1	KIT-UNIVERSAL JOINT (PILOT VALVE)	
J			**260-7505**	2	KIT-PLUNGER VALVE (JOYSTICK CTL, PORT 2, PORT 4)	
L			**260-7506**	2	KIT-PLUNGER VALVE (JOYSTICK CTL, PORT 1, PORT 2)	
N			**9T-2837**	1	KIT-SEAL (VALVE)	

H - KIT MARDED H SERVICES PART(S) MARKED H
J - KIT MARKED J SERVICES PART(S) MARKED J
L - KIT MARKED L SERVICES PART(S) MARKED L
N - KIT MARKED N SERVICES PART(S) MARKED N
Z - NOT SERVICED SEPARATELY

243-4046 **VALVE GP-PILOT** (contd.) **i07161983**

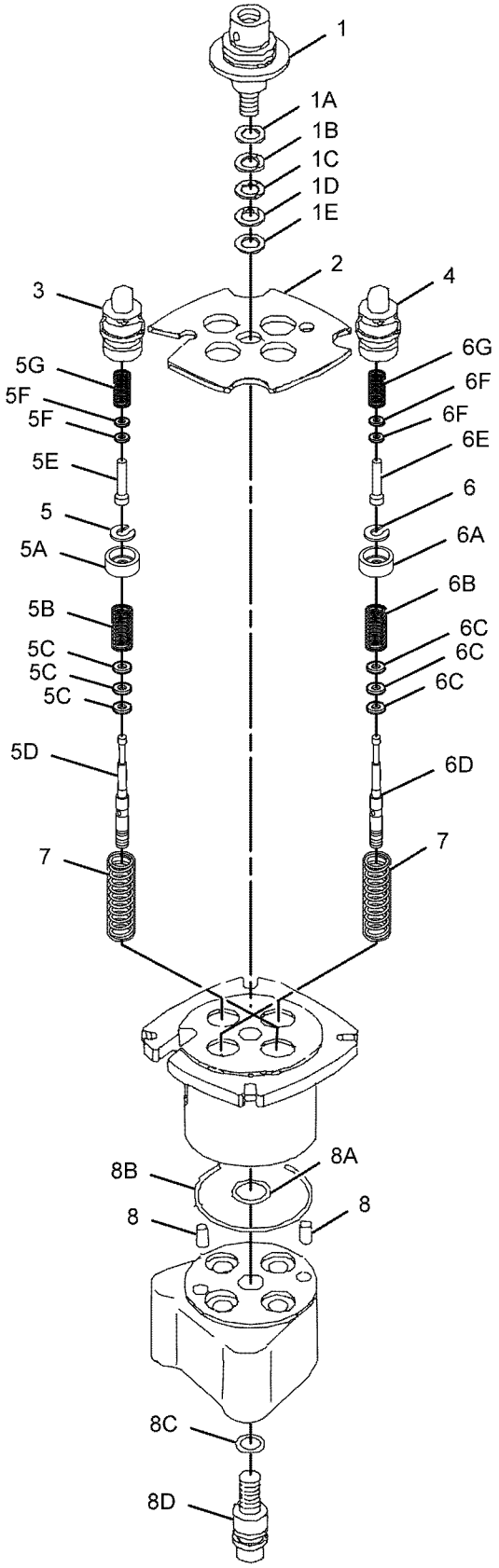

GRAPHIC #1 <END> g01126546

461-5997 VALVE GP-PILOT

S/N: CH91-UP
PART OF 461-6000 LINES GP-PILOT
ALSO AN ATTACHMENT

SMCS-5059 **i07107306**

NOTE	REF NO	GRAPHIC REF	PART NUMBER	QTY	PART NAME 1 2 3 4 5 6 (PRODUCT LEVEL)	SEE PAGE
	1	1	**8U-0119**	2	FITTING AS-HYDRAULIC (SOLENOID VALVE)	
					(EACH INCLUDES)	
		1	**214-7568**	1	SEAL-O-RING	
	2	1	*148-8424*	2	TEE AS	
					(EACH INCLUDES)	
		1	**6V-8397**	1	SEAL-O-RING	
		1	**8T-8902**	1	ADAPTER-TEE	
	3	1	*164-5629*	2	FITTING AS	
					(EACH INCLUDES)	
		1	**3J-1907**	1	SEAL-O-RING	
		1	**108-7516**	1	FITTING	
	4	1	**290-5825**	1	SENSOR GP-PRESSURE (PILOT OIL)	
		1	**8T-8729**	3	PIN-CONNECTOR (16-GA TO 20-GA)	
		1	**102-8803**	1	KIT-RECEPTACLE (3-PIN)	
					(INCLUDES RECEPTACLE AS & WEDGE)	
E		1	**9X-1813**		SLEEVE (34-CM)	
	5	1	**309-5769**	2	SWITCH AS-PRESSURE	
					(EACH INCLUDES)	
		1	**9X-3401**	2	PIN-CONNECTOR (16-GA TO 18-GA)	
					—OR—	
		1	**126-1767**	2	PIN-CONNECTOR (14-GA TO 16-GA)	
		1	**151-9272**		KIT-RECEPTACLE (2-PIN)	
					(INCLUDES RECEPTACLE AS & WEDGE)	
Y	6	1	*317-8429*	1	ACCUMULATOR GP-HYDRAULIC (CHARGED)	327
Y	7	1	**461-6011**	1	VALVE GP-SOLENOID (PILOT OPERATED)	721
	8	1	**108-5678**	1	UNION	
	9	1	*148-8336*	13	CONNECTOR AS	
					(EACH INCLUDES)	
		1	**3J-1907**	1	SEAL-O-RING	
		1	**6V-8397**	1	SEAL-O-RING	
		1	**6V-8636**	1	CONNECTOR	
	10	1	*148-8338*	4	CONNECTOR AS	
					(EACH INCLUDES)	
		1	**3J-1907**	1	SEAL-O-RING	
		1	**6V-8397**	1	SEAL-O-RING	
		1	**8T-0075**	1	CONNECTOR	
	11	1	*148-8340*	2	CONNECTOR AS	
					(EACH INCLUDES)	
		1	**3K-0360**	1	SEAL-O-RING	
		1	**6V-8398**	1	SEAL-O-RING	
		1	**6V-8639**	1	CONNECTOR	
	12	1	*148-8364*	1	ELBOW AS	
		1	**3K-0360**	1	SEAL-O-RING	
		1	**6V-8398**	1	SEAL-O-RING	
		1	**6V-8625**	1	ELBOW	
	13	1	*148-8433*	2	TEE AS	
					(EACH INCLUDES)	
		1	**6V-8397**	2	SEAL-O-RING	

461-5997 **VALVE GP-PILOT (**contd.**)** **i07107306**

NOTE	REF NO	GRAPHIC REF	PART NUMBER	QTY	PART NAME 1 2 3 4 5 6 (PRODUCT LEVEL)	SEE PAGE
		1	**6V-9836**	1	TEE-SWIVEL	
	14	1	*164-8908*	1	CONNECTOR AS	
		1	**3K-0360**	1	SEAL-O-RING	
		1	**6V-8398**	1	SEAL-O-RING	
		1	**8T-0077**	1	CONNECTOR	
	15	1	**3J-1907**	3	SEAL-O-RING	
	16	1	**3J-7354**	2	SEAL-O-RING	
	17	1	**5P-9617**	1	ADAPTER	
	18	1	**6V-0852**	1	CAP-DUST (PILOT OIL)	
	19	1	**6V-4433**	1	FITTING	
	20	1	**6V-9829**	1	CAP (ORFS)	
	21	1	**3S-2093**	3	STRAP-CABLE	

E - ORDER BY THE CENTIMETER
Y - SEPARATE ILLUSTRATION

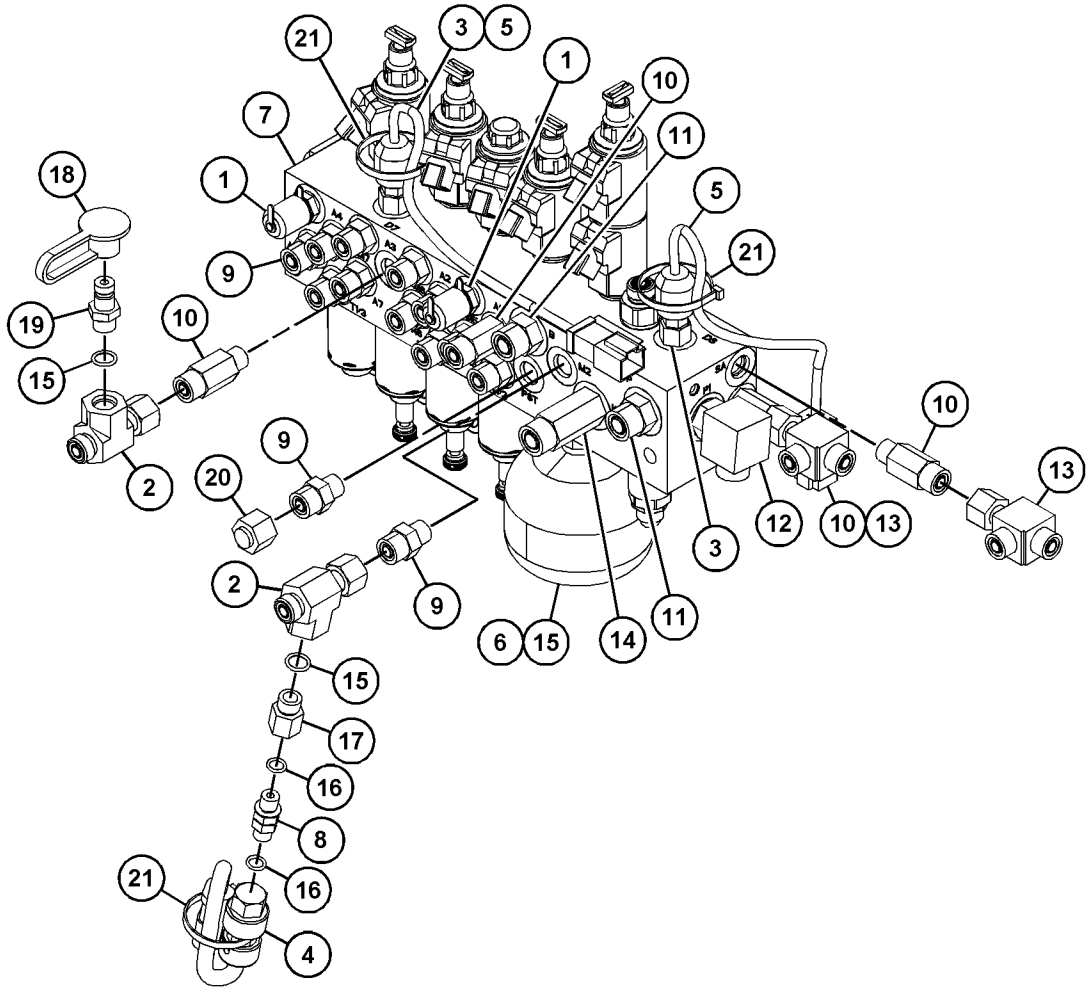

GRAPHIC #1 <END> g03745177

139-8929 VALVE GP-PUMP CONTROL–SWING

S/N: CH91-UP
PART OF 190-8199 PUMP GP-PISTON
ALSO AN ATTACHMENT

SMCS-5455 **i05510164**

NOTE	REF NO	GRAPHIC REF	PART NUMBER	QTY	PART NAME 1 2 3 4 5 6 (PRODUCT LEVEL)	SEE PAGE
	1	1	**139-9220**	1	VALVE AS	
B	2	1	**139-9222**	2	PISTON	
B	3	1	**139-9223**	2	PISTON	
B	4	1	**139-9224**	2	PISTON	
	5	1	**209-3565**	1	SEAL	
	6	1	**5P-5874**	1	SEAL-O-RING	
M	7	1	**102-7364**	1	BOLT-SOCKET HEAD (M6X1X80-MM)	
M	8	1	**8T-2922**	4	BOLT-SOCKET HEAD (M6X1X65-MM)	
M	9	1	**9X-2609**	1	SETSCREW-SOCKET (M8X1.25X8-MM)	
	10	1	**9T-3726**	4	PLUG	
	11	1	**9T-3929**	1	PLUG AS	
	12	1	**139-9225**	2	SPRING	
	13	1	**139-9227**	2	VALVE	

B - USE AS REQUIRED
M - METRIC PART

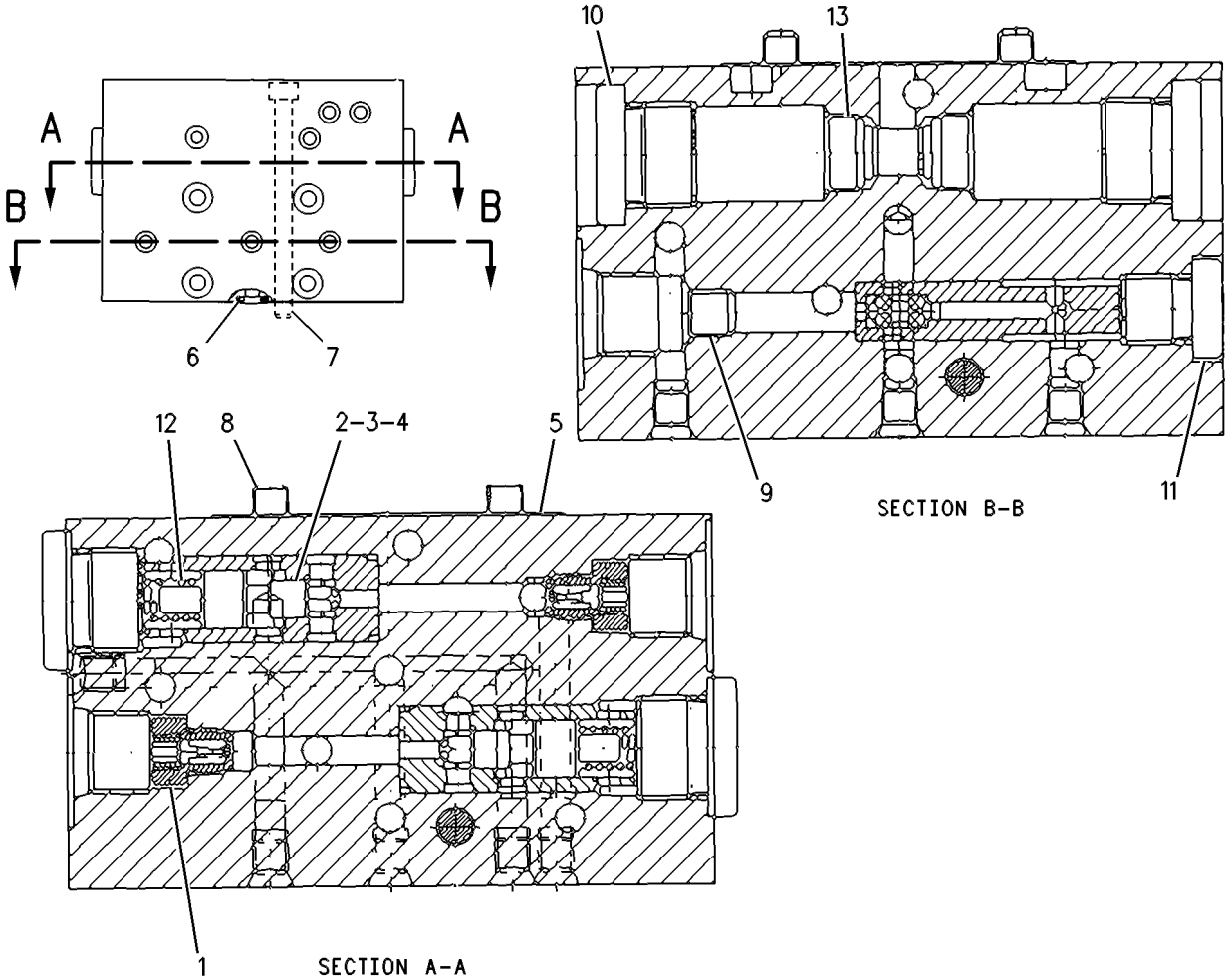

GRAPHIC #1 <END> g00265900

145-3542 VALVE GP-PUMP CONTROL—PRESSURE COMPENSATOR

S/N: CH91-UP
PART OF 190-8199 PUMP GP-PISTON
ALSO AN ATTACHMENT

SMCS-5455 **i05970346**

NOTE	REF NO	GRAPHIC REF	PART NUMBER	QTY	PART NAME 1 2 3 4 5 6 (PRODUCT LEVEL)	SEE PAGE
	1	1	**176-5158**	1	PISTON AS	
	3	1	**145-3810**	1	COVER	
	4	1	**145-3811**	1	COVER	
M	6	1	**160-8499**	1	NUT (M12X1.5-THD)	
M	7	1	**6V-8202**	8	BOLT-SOCKET HEAD (M8X1.25X16-MM)	
	8	1	**5W-1437**	8	LOCKWASHER	
J	9	1	**117-7273**	4	SEAL-O-RING	
	10	1	**145-3812**	2	RING	
J	11	1	**145-3813**	2	RING-SEAL	
					AVAILABLE REPAIR KIT(S):	
J			**443-6345**	1	KIT-SEAL	

J - KIT MARKED J SERVICES PART(S) MARKED J
M - METRIC PART

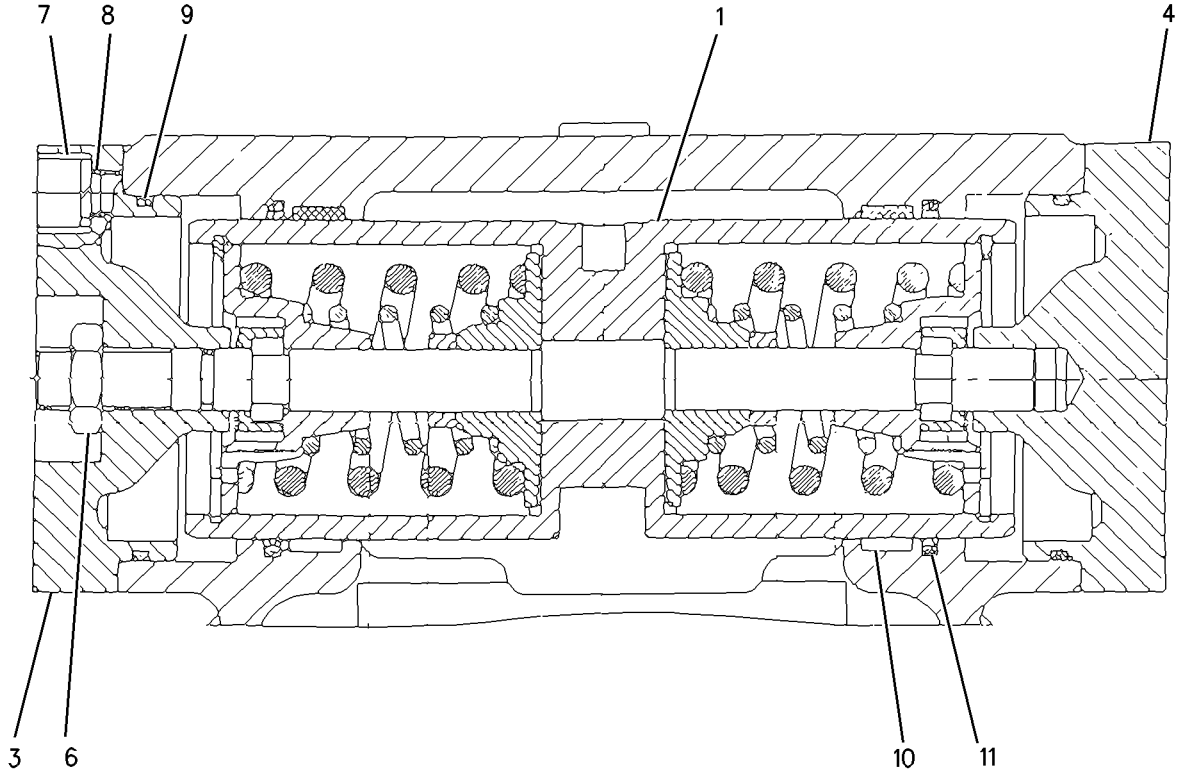

GRAPHIC #1 <END> g00621764

271-6282 VALVE GP-PUMP CONTROL—HORSEPOWER CONTROL

S/N: CH91-UP
PART OF 439-0479 VALVE GP-PUMP CONTROL
ALSO AN ATTACHMENT

SMCS-5455 **i05970165**

NOTE	REF NO	GRAPHIC REF	PART NUMBER	QTY	PART NAME 1 2 3 4 5 6 (PRODUCT LEVEL)	SEE PAGE
	1	1	**117-5899**	1	PLUG	
	2	1	**117-5900**	1	PISTON-CONTROL	
	3	1	**6E-3861**	4	RETAINER-SPRING	
	4	1	**271-6283**	1	PISTON	
	5	1	**179-6922**	2	SPRING	
	6	1	**9T-3721**	1	BODY	
	7	1	**117-7524**	1	SETSCREW	
	8	1	**117-5905**	1	PIN	
	9	1	**271-6284**	1	ADAPTER	
	10	1	**6E-1607**	1	LOCKNUT-SEALING	
	11	1	**6V-3922**	3	SEAL-O-RING	
	12	1	**6V-5326**	2	SEAL-O-RING	
	13	1	**253-7769**	1	RETAINER	
	14	1	**253-7770**	1	PLUG	
	15	1	**253-7771**	1	PIN	

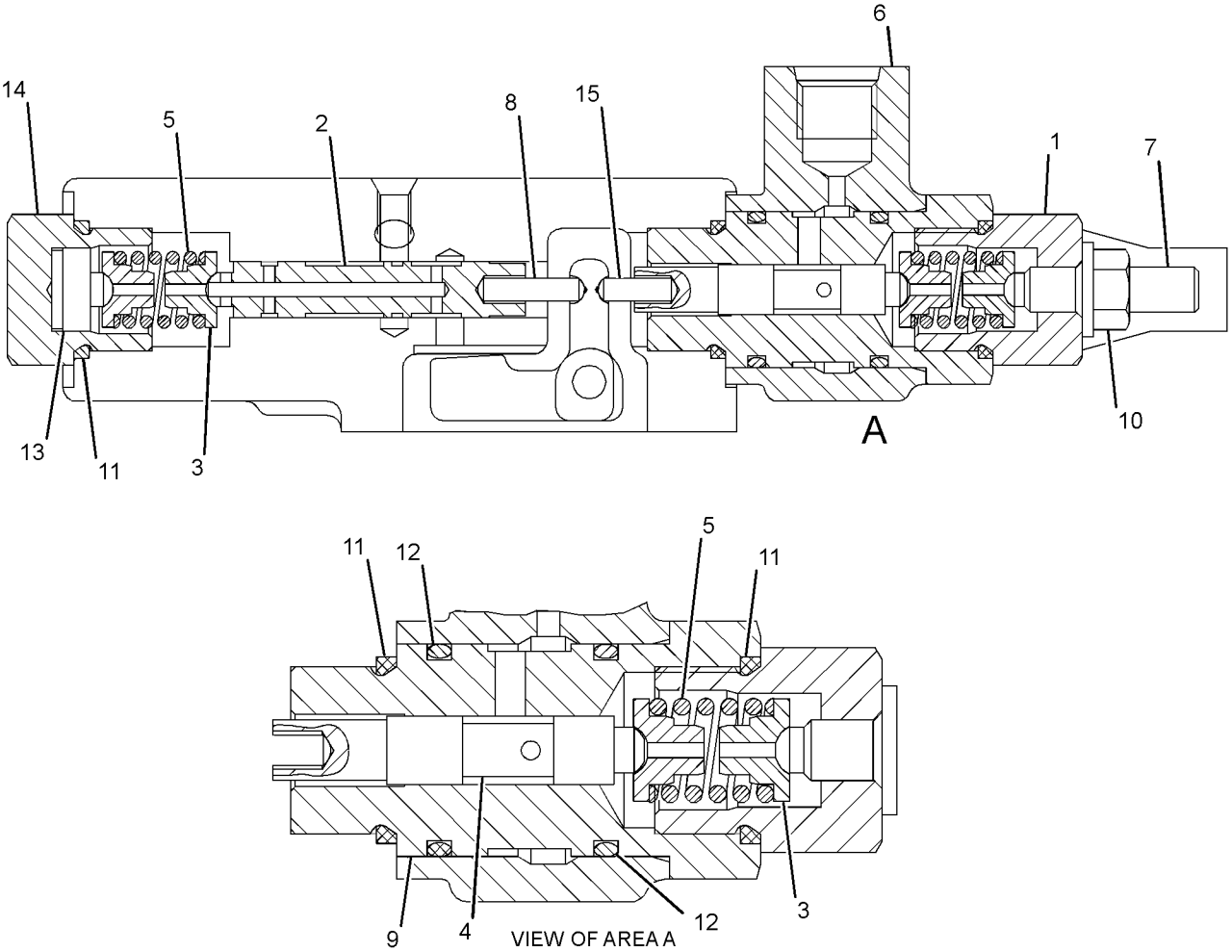

GRAPHIC #1 <END> g01322340

439-0479 VALVE GP-PUMP CONTROL

S/N: CH91-UP

PART OF 432-8567 PUMP GP-MAIN HYDRAULIC

ALSO AN ATTACHMENT

SMCS-5455 **i05970114**

NOTE	REF NO	GRAPHIC REF	PART NUMBER	QTY	PART NAME 1 2 3 4 5 6 (PRODUCT LEVEL)	SEE PAGE
Y	1	1	**271-6282**	1	VALVE GP-PUMP CONTROL (HORSEPOWER CONTROL)	690
Y	2	1	**439-0481**	1	VALVE GP-PUMP CONTROL (LOAD SENSING)	693
	3	1	**117-5787**	1	PISTON AS	
	3A	1	**117-5912**	1	BUSHING	
		1	**117-5911**	1	PISTON	
		1	**117-5913**	1	SPRING	
		1	**396-0050**	1	ROLLER	
	4	1	**117-5789**	1	LEVER	
	5	1	**117-5790**	1	BEARING-PIN	
	6	1	**4I-7690**	1	BUSHING	
M	7	1	**3E-8025**	1	BOLT-SOCKET HEAD (M8X1.25X50-MM)	
	8	1	**199-3060**	2	DOWEL	
	9	1	**125-8689**	1	NOZZLE	
	10	1	**9S-8004**	1	PLUG (9/16-18-THD)	
M	11	1	**9X-6154**	4	BOLT-SOCKET HEAD (M8X1.25-THD)	
	12	1	**202-9683**	1	RING-RETAINING	
	13	1	**2D-6392**	1	SEAL-O-RING	
	14	1	**9T-3930**	1	PLUG AS	
		1	**162-6816**	1	SEAL	
	15	1	**3J-1907**	1	SEAL-O-RING	

M - METRIC PART
Y - SEPARATE ILLUSTRATION

439-0479 **VALVE GP-PUMP CONTROL** (contd.) **i05970114**

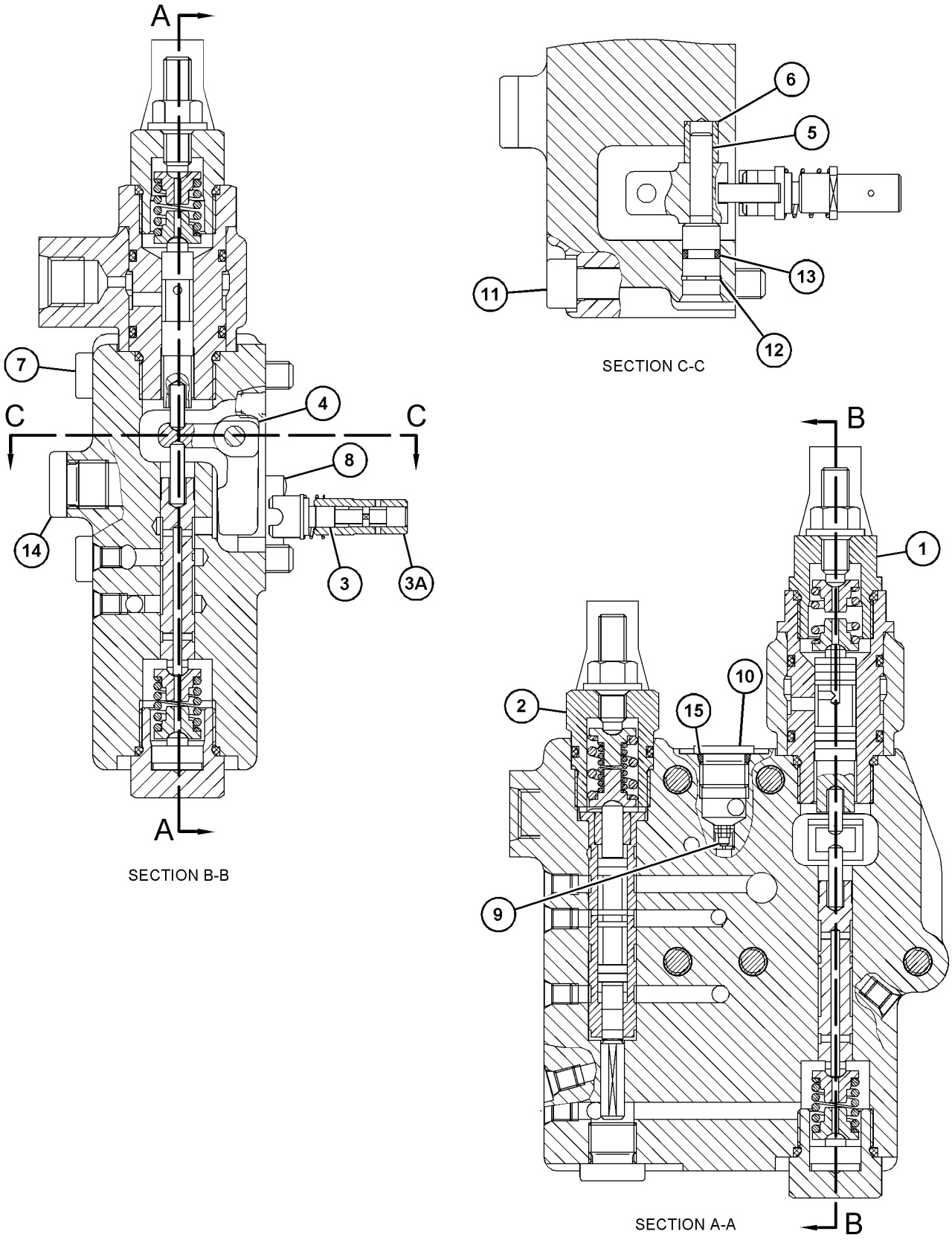

GRAPHIC #1 <END> g03434262

439-0481 VALVE GP-PUMP CONTROL

S/N: CH91-UP
PART OF 439-0479 VALVE GP-PUMP CONTROL
ALSO AN ATTACHMENT

SMCS-5455 **i05970169**

NOTE	REF NO	GRAPHIC REF	PART NUMBER	QTY	PART NAME 1 2 3 4 5 6 (PRODUCT LEVEL)	SEE PAGE
	1	1	**124-2634**	1	PLUG	
	2	1	**253-7772**	1	PISTON	
	3	1	**396-0032**	2	BOLT-SPRING	
	4	1	**253-7773**	1	PISTON-CONTROL	
	5	1	**165-9383**	1	SPRING	
	6	1	**179-6924**	1	SPRING	
	7	1	**253-7774**	1	PIN	
	8	1	**117-7524**	1	SETSCREW	
	9	1	**253-7775**	1	SEAT	
	10	1	**253-7776**	1	BUSHING	
JM	11	1	**9T-4817**	1	NUT (M8X1-THD)	
J	12	1	**6V-3922**	1	SEAL-O-RING	
	13	1	**272-9660**	1	SOLENOID	
					AVAILABLE REPAIR KIT(S):	
J			**443-1773**	1	KIT-SEAL	

J - KIT MARKED J SERVICES PART(S) MARKED J
M - METRIC PART

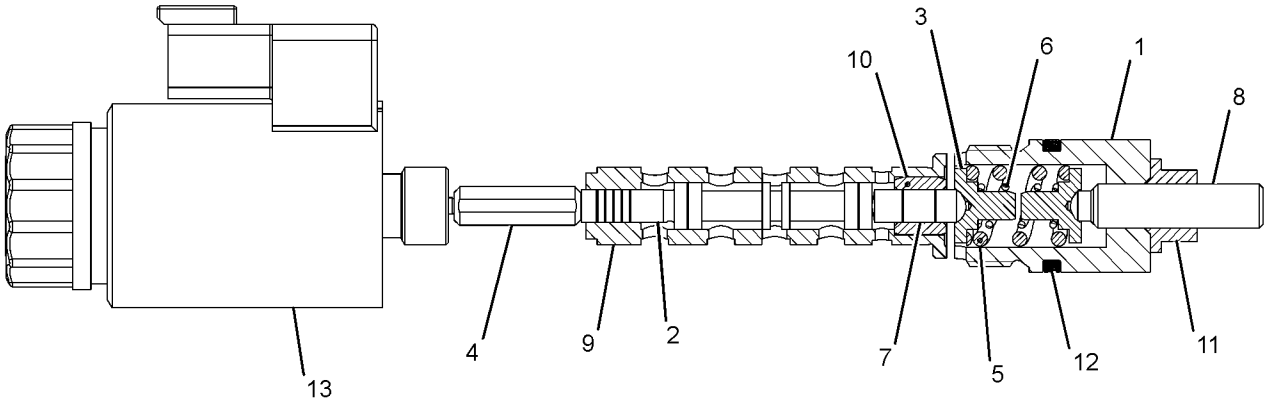

GRAPHIC #1 <END> g03422723

114-0217 VALVE GP-RELIEF–LINE

S/N: CH91-UP
PART OF 340-6790 VALVE GP-MAIN CONTROL
ALSO AN ATTACHMENT

SMCS-5069, 5117 **i05934407**

NOTE	REF NO	GRAPHIC REF	PART NUMBER	QTY	PART NAME 1 2 3 4 5 6 (PRODUCT LEVEL)	SEE PAGE
J	1	1	**5P-3456**	1	SEAL-O-RING	
J	2	1	**5P-8356**	1	SEAL-O-RING	
J	3	1	**115-7764**	2	RING-BACKUP	
	4	1	**297-1412**	1	CAP	
					AVAILABLE REPAIR KIT(S):	
J			**114-3070**	1	KIT-SEAL (RELIEF VALVE)	
J - KIT MARKED J SERVICES PART(S) MARKED J						

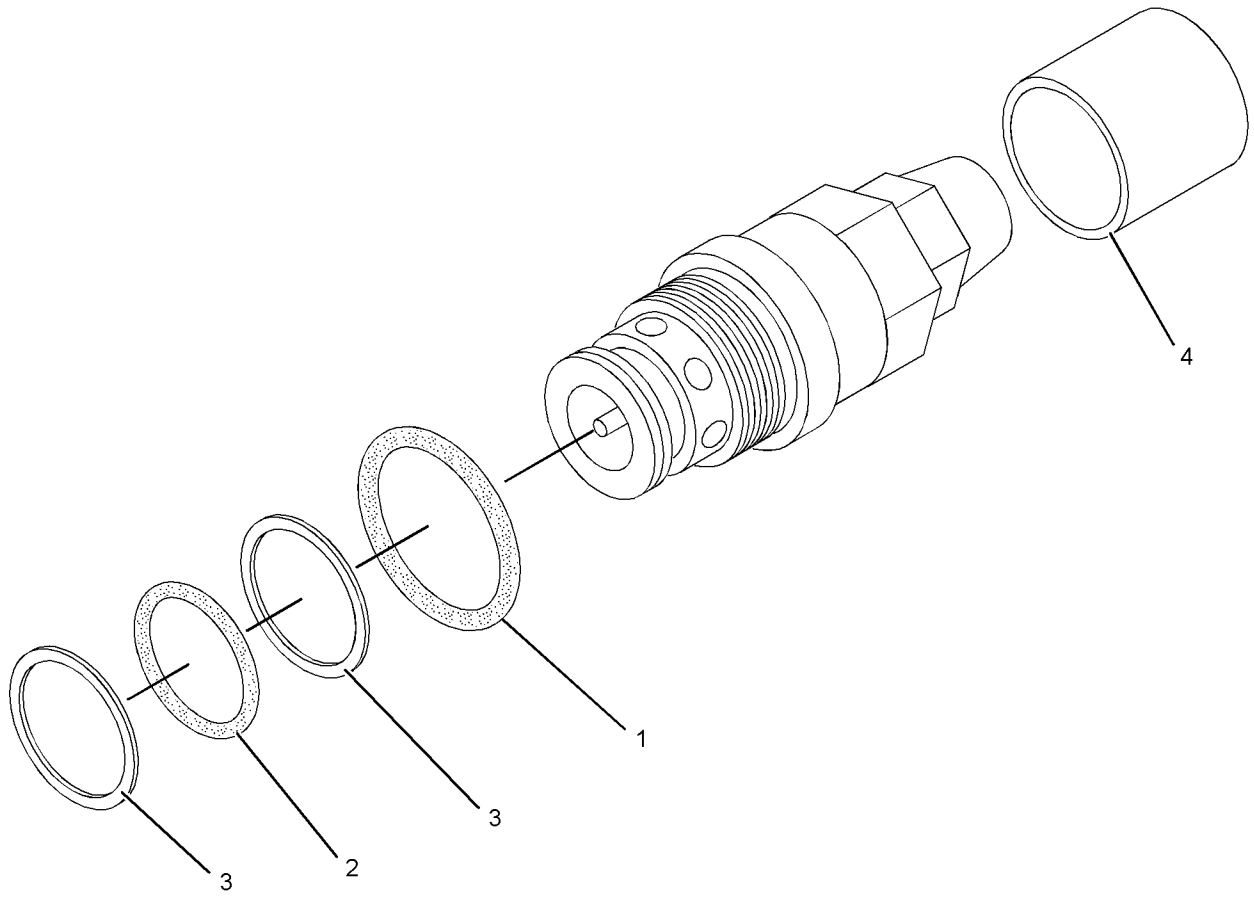

GRAPHIC #1 <END> g01360181

117-7275 VALVE GP-RELIEF–CROSSOVER

S/N: CH91-UP
PART OF 145-3543 HEAD GP-PUMP
ALSO AN ATTACHMENT

SMCS-5069, 5117 **i05970841**

NOTE	REF NO	GRAPHIC REF	PART NUMBER	QTY	PART NAME 1 2 3 4 5 6 (PRODUCT LEVEL)	SEE PAGE
	1	1	**6V-5326**	1	SEAL-O-RING	
	2	1	**112-4719**	1	RING-BACKUP	

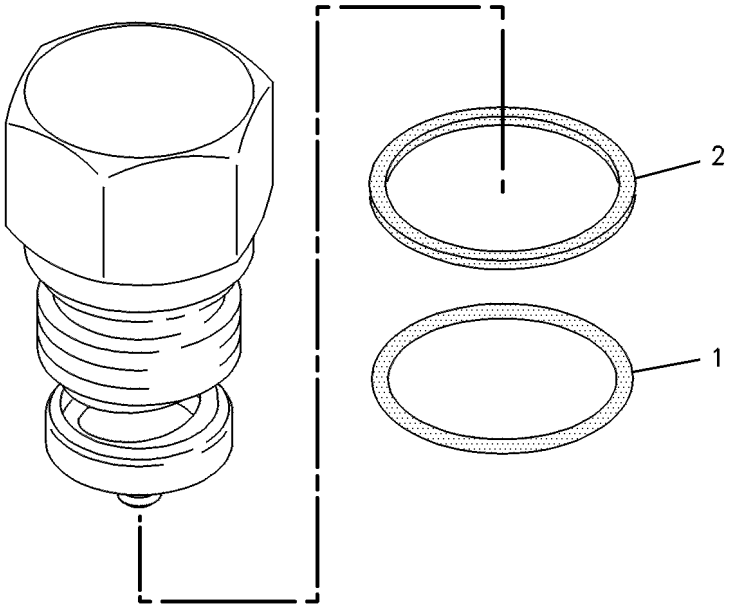

GRAPHIC #1 <END> g00247524

117-7276 VALVE GP-RELIEF—STEERING HIGH PRESSURE CUTOFF

S/N: CH91-UP
PART OF 145-3543 HEAD GP-PUMP
ALSO AN ATTACHMENT

SMCS-5069, 5117 **i05970843**

NOTE	REF NO	GRAPHIC REF	PART NUMBER	QTY	PART NAME 1 2 3 4 5 6 (PRODUCT LEVEL)	SEE PAGE
	2	1	**6E-4401**	1	SETSCREW-ADJUSTMENT	
J	3	1	**7Y-5219**	1	SEAL-O-RING	
J	4	1	**6E-1607**	1	LOCKNUT-SEALING	
J	5	1	**6V-5586**	1	SEAL-O-RING	
					AVAILABLE REPAIR KIT(S):	
J			**122-9363**	1	KIT-SEAL (RELIEF VALVE) (VALVE RELIEF)	

J - KIT MARKED J SERVICES PART(S) MARKED J

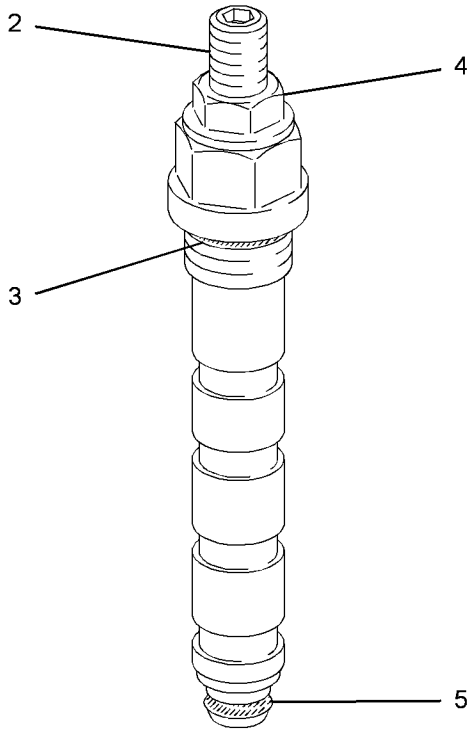

GRAPHIC #1 <END> g01288681

141-7812 VALVE GP-RELIEF

S/N: CH91-UP
PART OF 340-6790 VALVE GP-MAIN CONTROL
ALSO AN ATTACHMENT

SMCS-5069, 5117 **i05510333**

NOTE	REF NO	GRAPHIC REF	PART NUMBER	QTY	PART NAME 1 2 3 4 5 6 (PRODUCT LEVEL)	SEE PAGE
	1	1	**033-5879**	1	SEAL-O-RING	
	2	1	**9J-0705**	1	RING-BACKUP	
	3	1	**192-7111**	1	SEAL-O-RING	
	4	1	**115-9530**	2	RING-BACKUP	

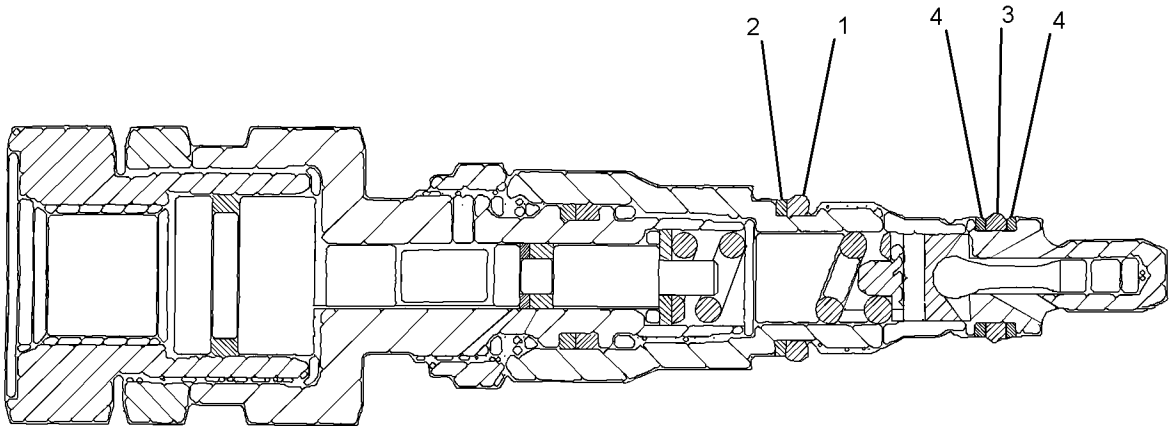

GRAPHIC #1 <END> g03088396

191-3952 VALVE GP-RELIEF–CROSSOVER

S/N: CH91-UP
PART OF 293-0511 VALVE GP-BRAKE CONTROL
ALSO AN ATTACHMENT

SMCS-5069, 5117 **i05510151**

NOTE	REF NO	GRAPHIC REF	PART NUMBER	QTY	PART NAME 1 2 3 4 5 6 (PRODUCT LEVEL)	SEE PAGE
	1	1	**191-3954**	1	PISTON	
	2	1	**191-2713**	1	SPRING	
	3	1	**191-2714**	1	POPPET	
	4	1	**191-3956**	1	PISTON	
	5	1	**191-2715**	1	SPRING	
	6	1	**191-2716**	1	PLUG	
	7	1	**3E-6766**	1	SEAL-O-RING	

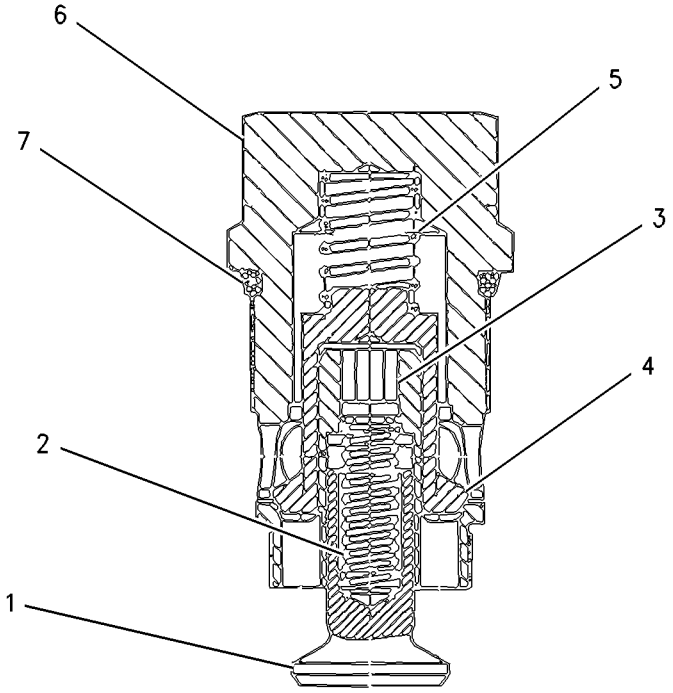

GRAPHIC #1 <END> g00700838

206-5013 VALVE GP-RELIEF

S/N: CH91-UP
FIELD REPLACEMENT ORDER 339-6258—PAGE: 702
PART OF 251-8038 VALVE GP-CONTROL
AN ATTACHMENT

SMCS-5069, 5117 **i05519564**

NOTE	REF NO	GRAPHIC REF	PART NUMBER	QTY	PART NAME 1 2 3 4 5 6 (PRODUCT LEVEL)	SEE PAGE
	1	1	**297-1412**	1	CAP	
					PARTS SHOWN IN GRAPHIC(S) WITHOUT A REFERENCE NUMBER ARE NOT SERVICED SEPARATELY	
					AVAILABLE REPAIR KIT(S):	
			204-6353	1	KIT-SEAL (VALVE)	
					(INCLUDES PARTS MARKED J IN GRAPHIC)	

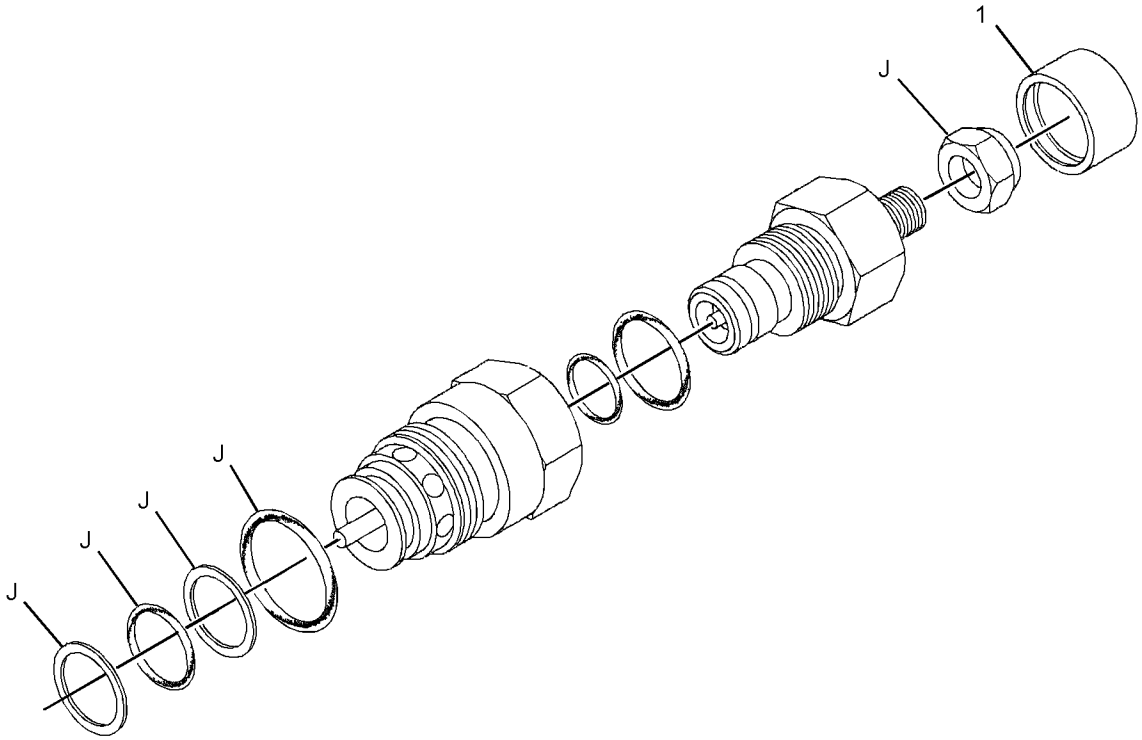

GRAPHIC #1 <END> g01358285

212-6679 VALVE GP-RELIEF

S/N: CH91-UP
PART OF 145-3543 HEAD GP-PUMP
ALSO AN ATTACHMENT

SMCS-5069, 5117 **i04937999**

NOTE	REF NO	GRAPHIC REF	PART NUMBER	QTY	PART NAME 1 2 3 4 5 6 (PRODUCT LEVEL)	SEE PAGE
	1	1	**6V-8352**	1	SEAL-O-RING	

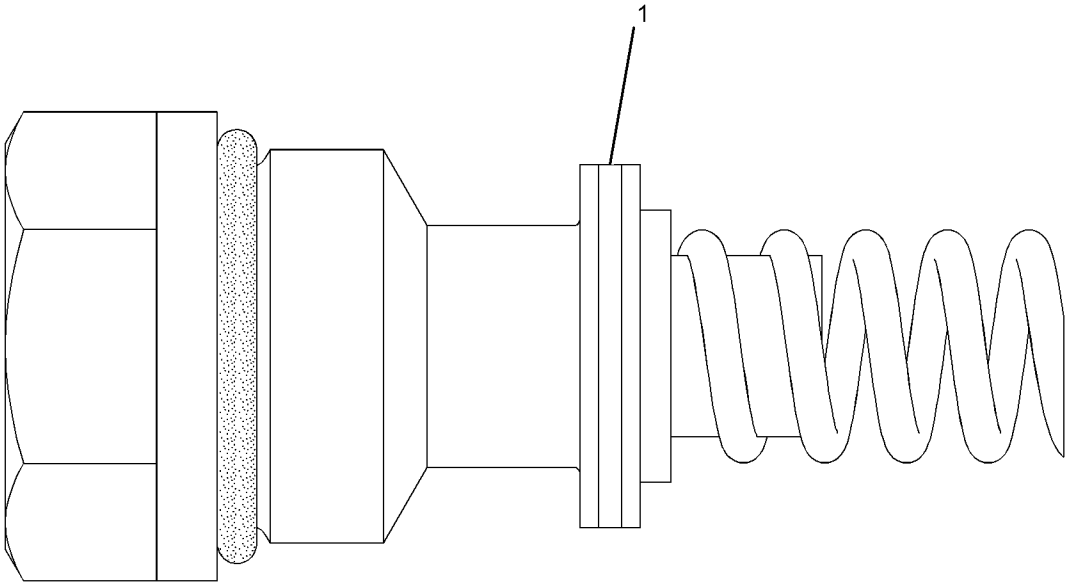

GRAPHIC #1 <END> g03035896

315-0489 VALVE GP-RELIEF

S/N: CH91-UP
PART OF 315-0490 VALVE GP-CONTROL
AN ATTACHMENT

SMCS-5069, 5117 **i05560797**

NOTE	REF NO	GRAPHIC REF	PART NUMBER	QTY	PART NAME 1 2 3 4 5 6 (PRODUCT LEVEL)	SEE PAGE
	1	1	**6E-5060**	1	CAP AS (TAMPERPROOF)	
M	2	1	**5P-7970**	1	NUT (M8X1.25-THD)	
	3	1	**8U-6457**	1	SEAL-O-RING	
	4	1	**3E-4297**	1	SEAL-O-RING	
					PARTS SHOWN IN GRAPHIC(S) WITHOUT A REFERENCE NUMBER ARE NOT SERVICED SEPARATELY	

M - METRIC PART

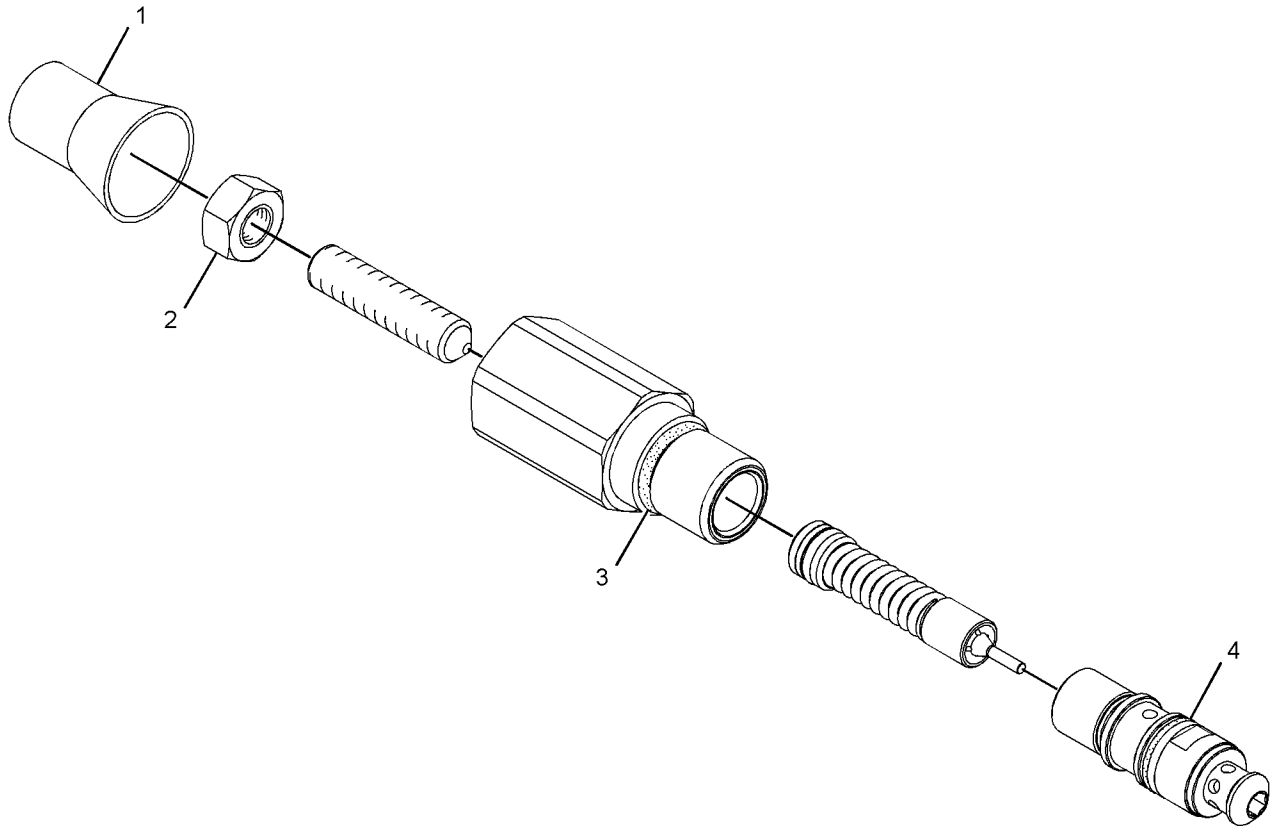

GRAPHIC #1 <END> g01874872

339-6258 VALVE GP-RELIEF

S/N: CH91-UP

FIELD REPLACEMENT FOR 206-5013—PAGE: 699

SMCS-5069, 5117 **i05563909**

NOTE	REF NO	GRAPHIC REF	PART NUMBER	QTY	PART NAME 1 2 3 4 5 6 (PRODUCT LEVEL)	SEE PAGE
					PARTS SHOWN IN GRAPHIC(S) WITHOUT A REFERENCE NUMBER ARE NOT SERVICED SEPARATELY	
					AVAILABLE REPAIR KIT(S):	
			204-6353	1	KIT-SEAL (VALVE)	
					(INCLUDES LOCKNUTS, O-RING SEALS, BACKUP RINGS & PARTS MARKED J IN GRAPHIC)	

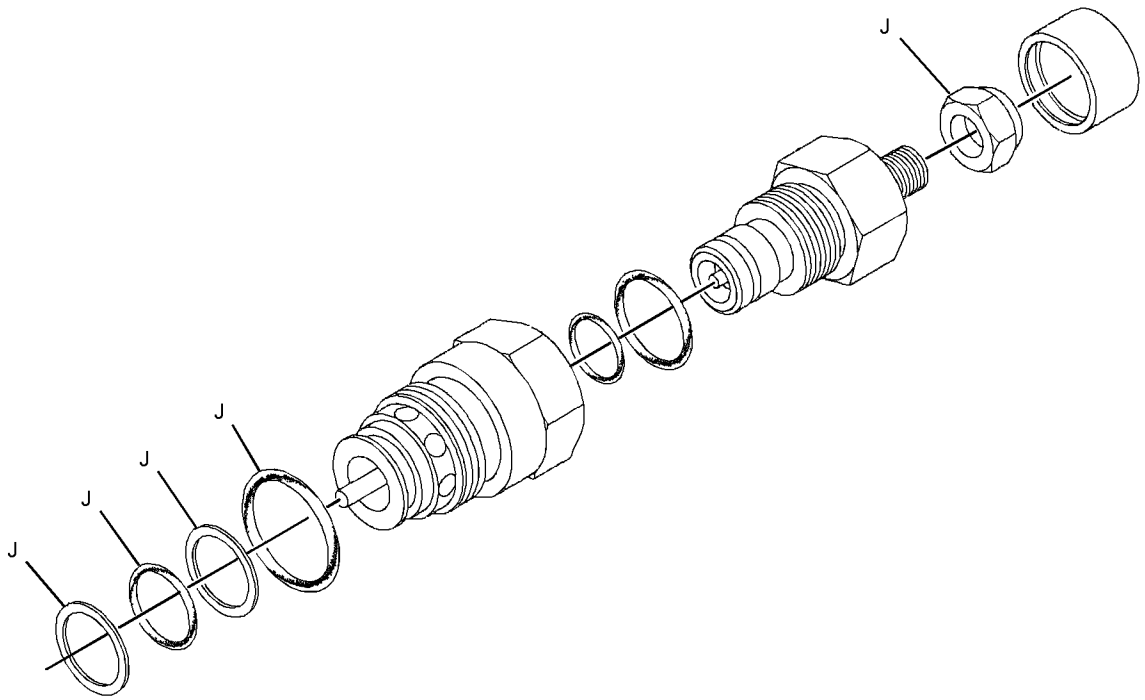

GRAPHIC #1 <END> g03099582

196-7486 VALVE GP-SOLENOID

S/N: CH91-UP
24-VOLT
PART OF 461-6011 VALVE GP-SOLENOID
ALSO AN ATTACHMENT

SMCS-5479 **i05513111**

NOTE	REF NO	GRAPHIC REF	PART NUMBER	QTY	PART NAME 1 2 3 4 5 6 (PRODUCT LEVEL)	SEE PAGE
J	1	1	**149-4076**	1	RING-BACKUP	
J	2	1	**149-4077**	1	RING-BACKUP	
J	3	1	**095-1750**	1	SEAL-O-RING	
J	4	1	**6V-8398**	1	SEAL-O-RING	
J	5	1	**6V-8399**	1	SEAL-O-RING	
	6	1	**195-7747**	1	SOLENOID	
J	7	1	**177-6628**	1	COVER	
J	8	1	**173-8277**	1	SEAL-O-RING	
J	9	1	**177-6970**	1	SEAL-O-RING	
					AVAILABLE REPAIR KIT(S):	
J			**177-6629**	1	KIT-SEAL (SOLENOID VALVE)	

J - KIT MARKED J SERVICES PART(S) MARKED J

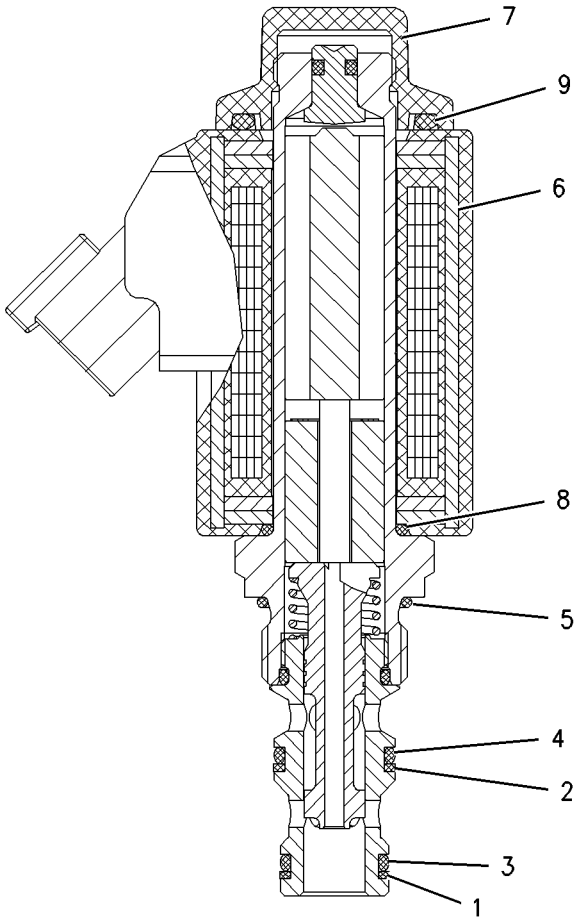

GRAPHIC #1 <END> g00821836

196-7543 VALVE GP-SOLENOID

S/N: CH91-UP
24-VOLT
PART OF 363-8923, 363-8926, 479-4267 LINES GP-STABILIZER
AN ATTACHMENT

SMCS-5479 **i05519721**

NOTE	REF NO	GRAPHIC REF	PART NUMBER	QTY	PART NAME 1 2 3 4 5 6 (PRODUCT LEVEL)	SEE PAGE
	1	1	**199-1155**	2	VALVE GP-SOLENOID (24-VOLT) (STABILIZER)	
					(EACH INCLUDES)	
	1A	1	**177-6628**	1	COVER	
	1B	1	**195-9089**	1	SOLENOID (STABILIZER)	
	1C	1	**205-1414**	1	KIT-SEAL (SOLENOID VALVE)	
					(INCLUDES O-RING SEALS & BACKUP RINGS)	
	1D	1	**177-6970**	1	SEAL-O-RING	
	1E	1	**173-8277**	1	SEAL-O-RING	

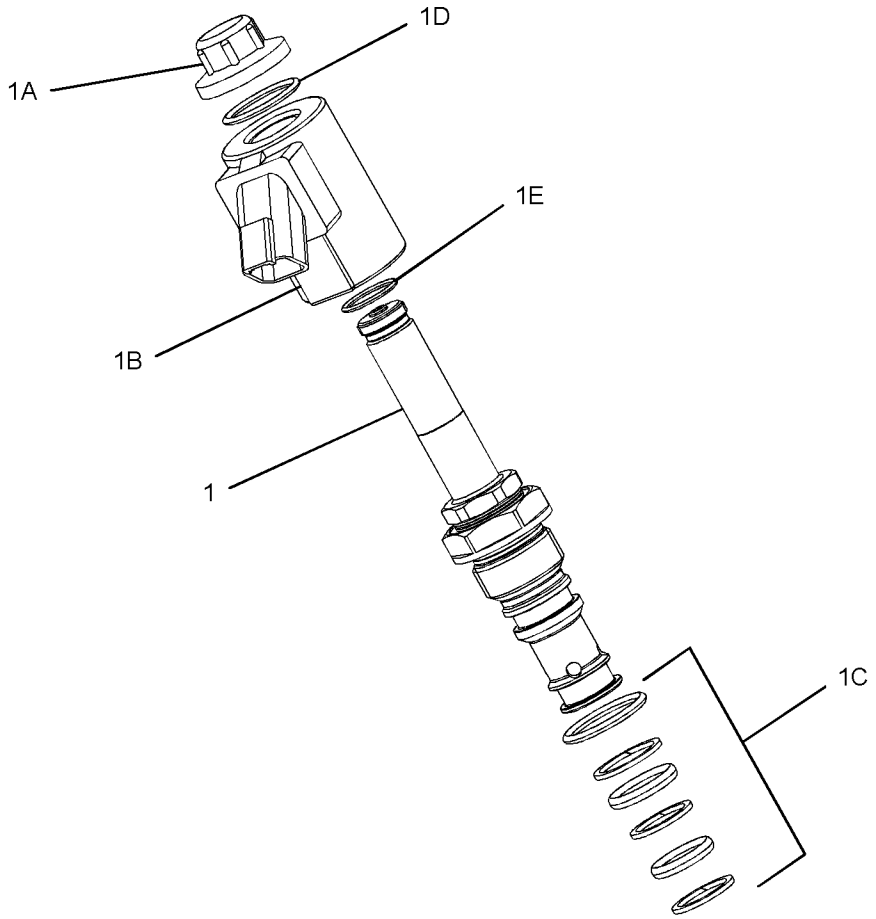

GRAPHIC #1 <END> g01384326

196-7544 VALVE GP-SOLENOID

S/N: CH91-UP
24-VOLT
PART OF 416-6996, 416-6998, 479-4263, 479-4266 LINES GP-CYLINDER
AN ATTACHMENT

SMCS-5479 **i05519710**

NOTE	REF NO	GRAPHIC REF	PART NUMBER	QTY	PART NAME 1 2 3 4 5 6 (PRODUCT LEVEL)	SEE PAGE
	1	1	**199-1155**	1	VALVE GP-SOLENOID (24-VOLT) (BLADE)	
	1A	1	**177-6628**	1	COVER	
	1B	1	**195-9089**	1	SOLENOID (BLADE)	
	1C	1	**205-1414**	1	KIT-SEAL (SOLENOID VALVE)	
					(INCLUDES O-RING SEALS & BACKUP RINGS)	
	1D	1	**177-6970**	1	SEAL-O-RING	
	1E	1	**173-8277**	1	SEAL-O-RING	

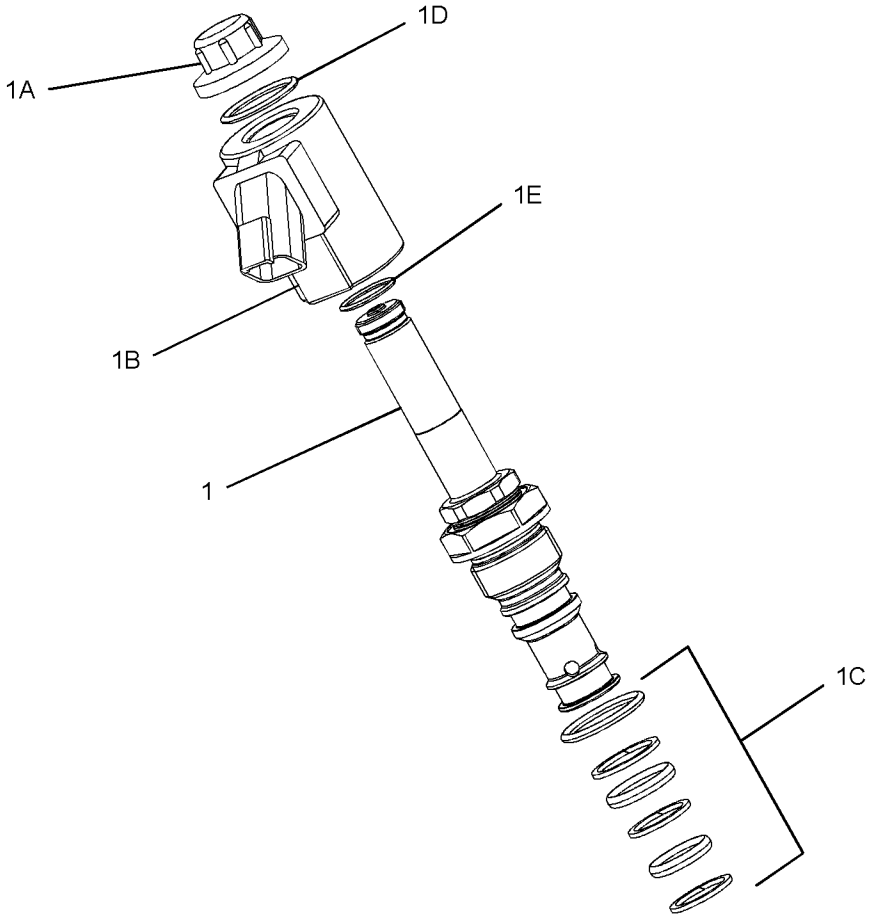

GRAPHIC #1 <END> g01384322

199-1153 VALVE GP-SOLENOID

S/N: CH91-UP
24-VOLT
PART OF 461-6011 VALVE GP-SOLENOID
ALSO AN ATTACHMENT

SMCS-5479 **i05561390**

NOTE	REF NO	GRAPHIC REF	PART NUMBER	QTY	PART NAME 1 2 3 4 5 6 (PRODUCT LEVEL)	SEE PAGE
J	1	1	**149-4076**	1	RING-BACKUP	
J	2	1	**149-4077**	1	RING-BACKUP	
J	3	1	**095-1750**	1	SEAL-O-RING	
J	4	1	**6V-8398**	1	SEAL-O-RING	
J	5	1	**6V-8399**	1	SEAL-O-RING	
	6	1	**195-7747**	1	SOLENOID	
	7	1	**204-5099**	1	ACTUATOR AS	
J	8	1	**173-8277**	1	SEAL-O-RING	
J	9	1	**177-6970**	1	SEAL-O-RING	
					AVAILABLE REPAIR KIT(S):	
J			**177-6629**	1	KIT-SEAL (SOLENOID VALVE)	

J - KIT MARKED J SERVICES PART(S) MARKED J

199-1153 **VALVE GP-SOLENOID (**contd.**)** **i05561390**

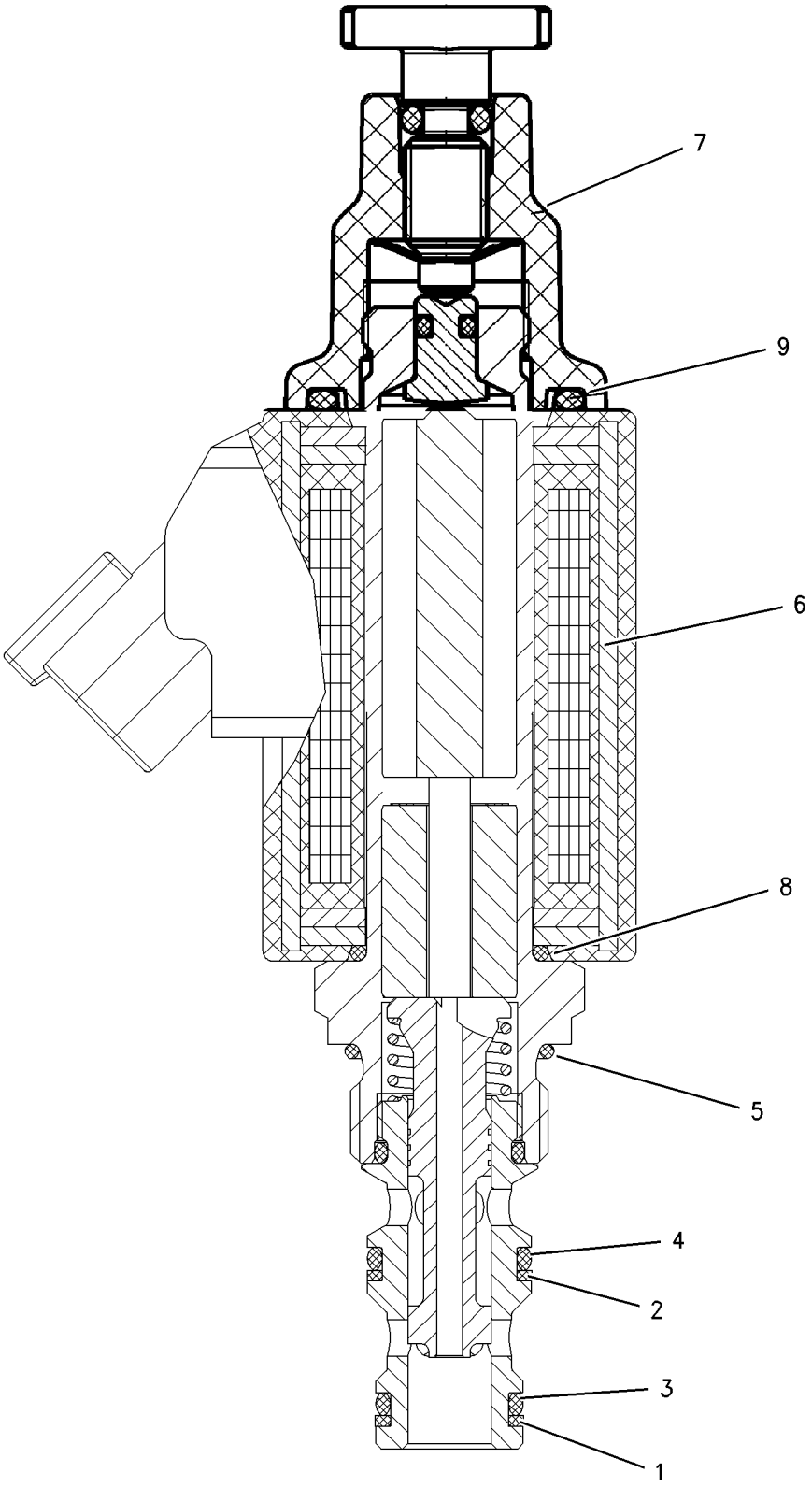

GRAPHIC #1 <END> g00822383

251-5594 VALVE GP-SOLENOID

S/N: CH91-UP
24-VOLT
PART OF 461-6011 VALVE GP-SOLENOID
ALSO AN ATTACHMENT

SMCS-5479 **i05561333**

NOTE	REF NO	GRAPHIC REF	PART NUMBER	QTY	PART NAME 1 2 3 4 5 6 (PRODUCT LEVEL)	SEE PAGE
	1	1	**204-5099**	1	ACTUATOR AS	
		1	**177-6970**	1	SEAL-O-RING	
	2	1	**195-7747**	2	SOLENOID (TRANSMISSION GEAR)	
					PARTS SHOWN IN GRAPHIC(S) WITHOUT A REFERENCE NUMBER ARE NOT SERVICED SEPARATELY	
					AVAILABLE REPAIR KIT(S):	
			254-3476	1	KIT-SEAL (TRANSMISSION SHIFT VALVE)	
					(INCLUDES O-RING SEALS, BACKUP RINGS & PARTS MARKED J IN GRAPHIC)	

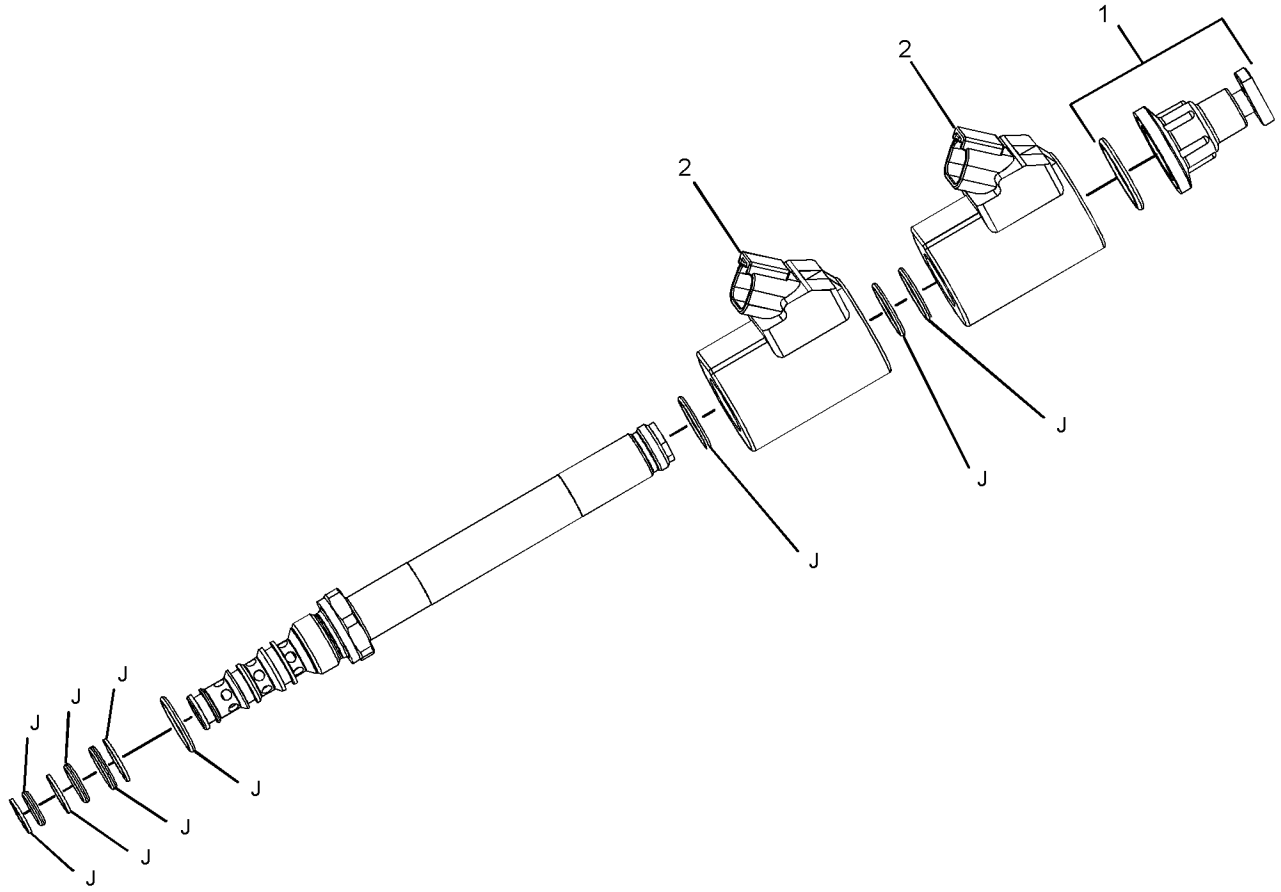

GRAPHIC #1 <END> g03088356

254-2643 VALVE GP-SOLENOID

S/N: CH91-UP

PART OF 307-2789 VALVE & MTG GP-SOLENOID

AN ATTACHMENT

SMCS-5479 **i05560649**

NOTE	REF NO	GRAPHIC REF	PART NUMBER	QTY	PART NAME 1 2 3 4 5 6 (PRODUCT LEVEL)	SEE PAGE
	1	1	**254-2635**	1	PLATE	
Y	2	1	**254-2639**	1	VALVE GP-CONTROL (MEDIUM PRESSURE FUNCTION)	665
Y	3	1	**315-0490**	1	VALVE GP-CONTROL (LOAD SENSING)	667
M	4	1	**8T-4133**	3	NUT (M10X1.5-THD)	
	5	1	**8T-4121**	3	WASHER-HARD (11X21X2.5-MM THK)	

M - METRIC PART
Y - SEPARATE ILLUSTRATION

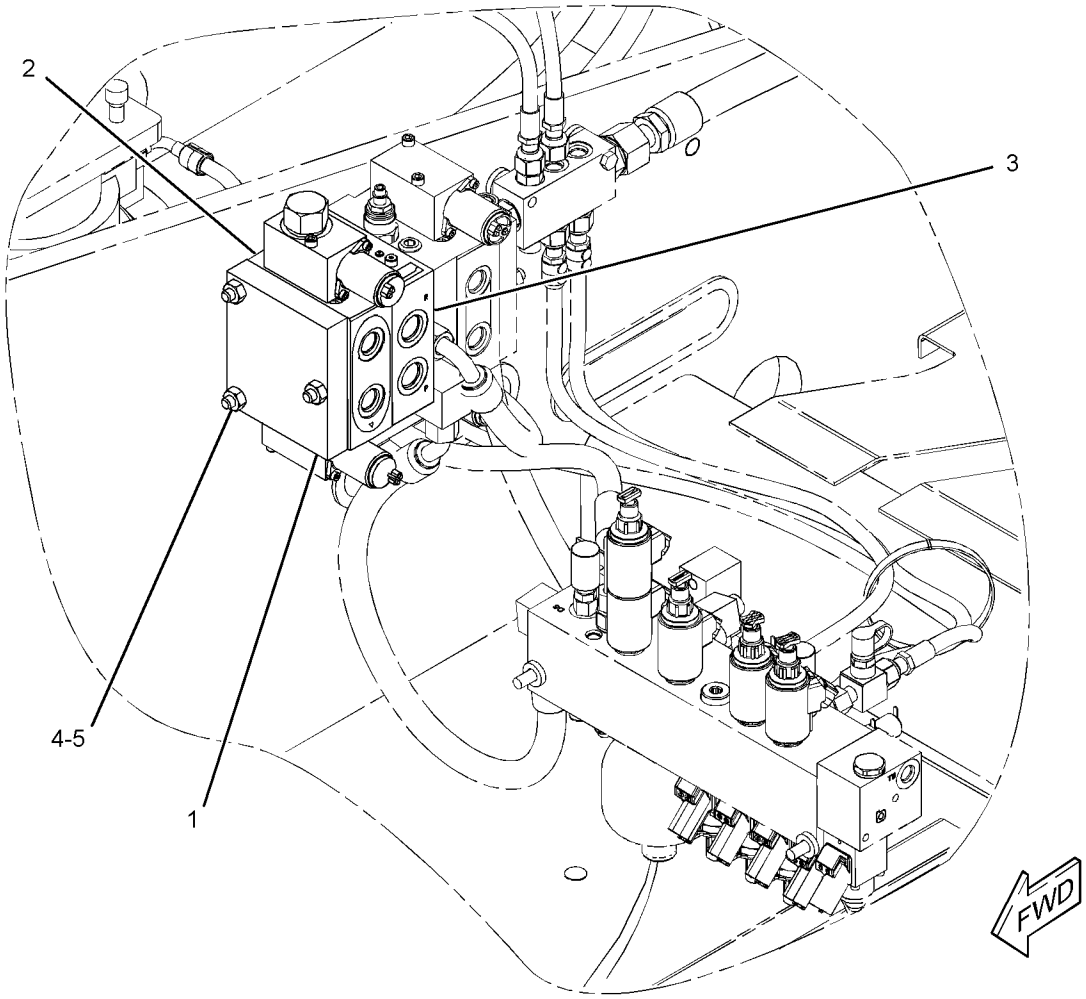

GRAPHIC #1 <END> g01320927

265-7156 VALVE GP-SOLENOID

S/N: CH91-UP

PART OF 340-3491 VALVE & LINES GP-BOOM

AN ATTACHMENT

SMCS-5479 **i05510331**

NOTE	REF NO	GRAPHIC REF	PART NUMBER	QTY	PART NAME 1 2 3 4 5 6 (PRODUCT LEVEL)	SEE PAGE
Y	1	1	**294-2566**	1	VALVE GP-SOLENOID (SMARTBOOM)	711
J	2	1	**294-2567**	1	VALVE AS	
					AVAILABLE REPAIR KIT(S):	
J			**210-1925**	1	KIT-SEAL (DIRECTIONAL CONTROL VALVE)	
					(INCLUDES BACKUP RINGS & O-RINGS)	

J - KIT MARKED J SERVICES PART(S) MARKED J
Y - SEPARATE ILLUSTRATION

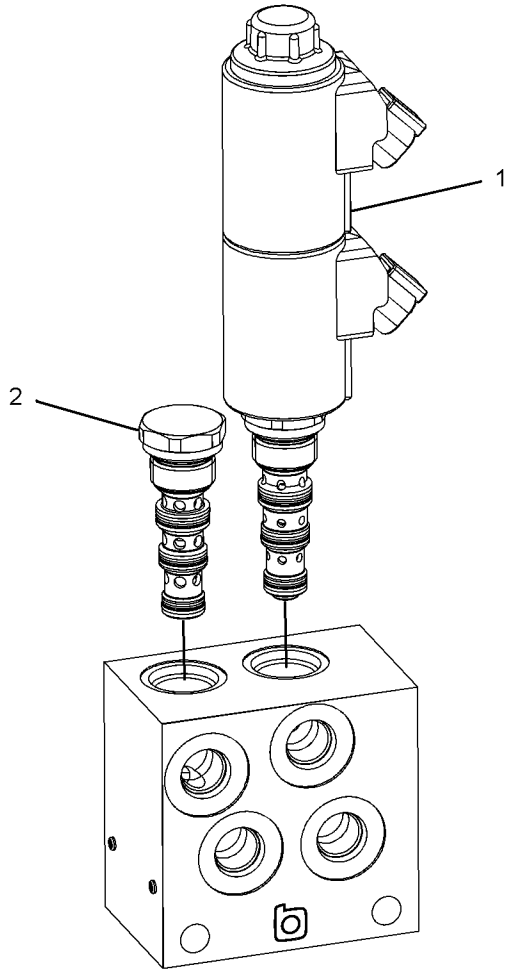

GRAPHIC #1 <END> g01329538

294-2566 VALVE GP-SOLENOID

S/N: CH91-UP
24-VOLT
PART OF 265-7156 VALVE GP-SOLENOID
AN ATTACHMENT

SMCS-5479 **i05510332**

NOTE	REF NO	GRAPHIC REF	PART NUMBER	QTY	PART NAME 1 2 3 4 5 6 (PRODUCT LEVEL)	SEE PAGE
	1	1	**195-7747**	2	SOLENOID	
	2	1	**177-6628**	1	COVER	
	3	1	**173-8277**	3	SEAL-O-RING	
	4	1	**177-6970**	1	SEAL-O-RING	
	5	1	**210-1925**	1	KIT-SEAL (SOLENOID VALVE)	
					(INCLUDES O-RING SEALS & BACKUP RINGS)	
					PARTS SHOWN IN GRAPHIC(S) WITHOUT A REFERENCE NUMBER ARE NOT SERVICED SEPARATELY	

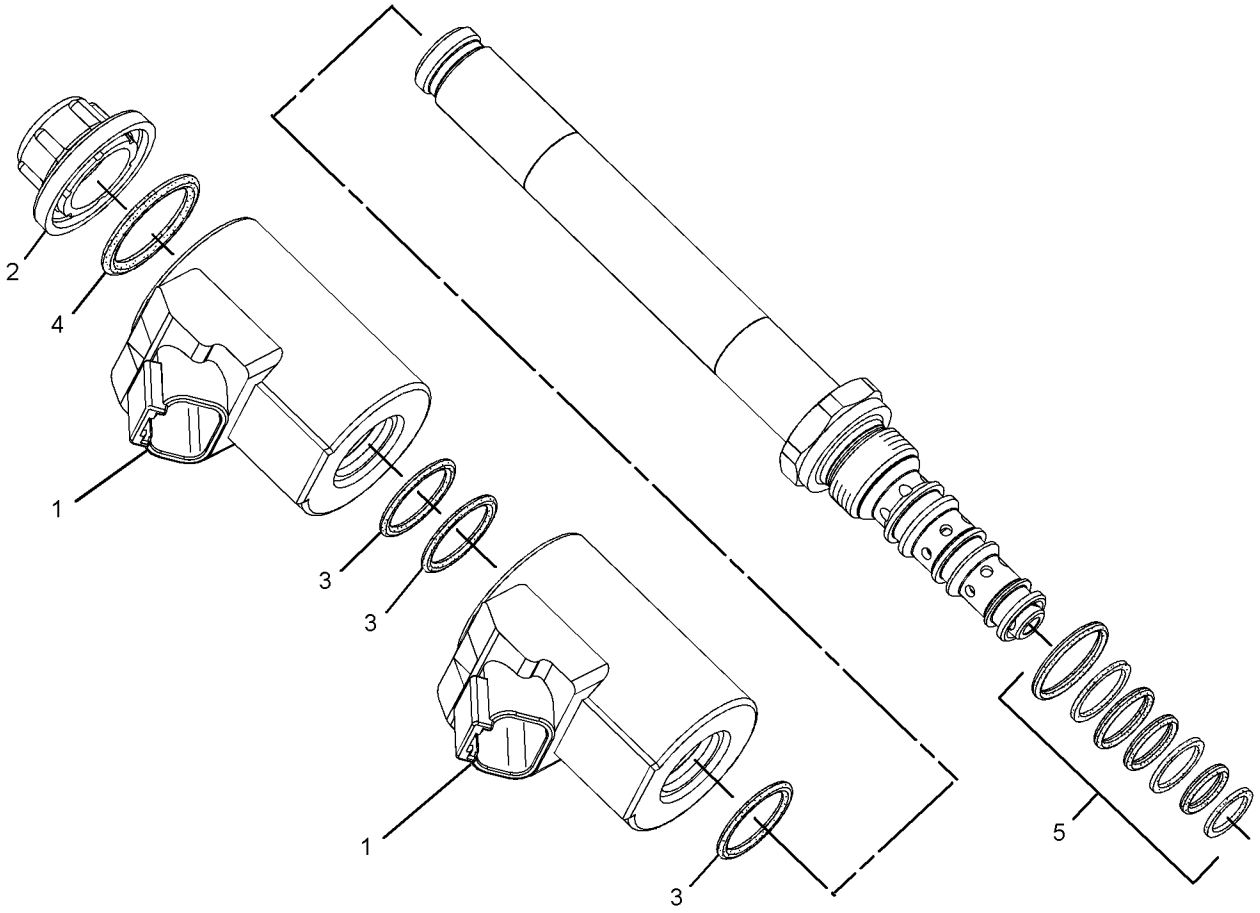

GRAPHIC #1 <END> g03086980

295-7688 VALVE GP-SOLENOID

S/N: CH91-UP
PART OF 431-7217 LINES GP-RIDE CONTROL
AN ATTACHMENT

SMCS-5479 **i05519560**

NOTE	REF NO	GRAPHIC REF	PART NUMBER	QTY	PART NAME 1 2 3 4 5 6 (PRODUCT LEVEL)	SEE PAGE
	1	1	**9S-8005**	2	PLUG (3/4-16-THD)	
	2	1	**3K-0360**	2	SEAL-O-RING	
	3	1	**4J-5267**	1	SEAL-O-RING	
Y	4	1	**295-8553**	1	VALVE GP-SOLENOID (RIDE CONTROL)	714

Y - SEPARATE ILLUSTRATION

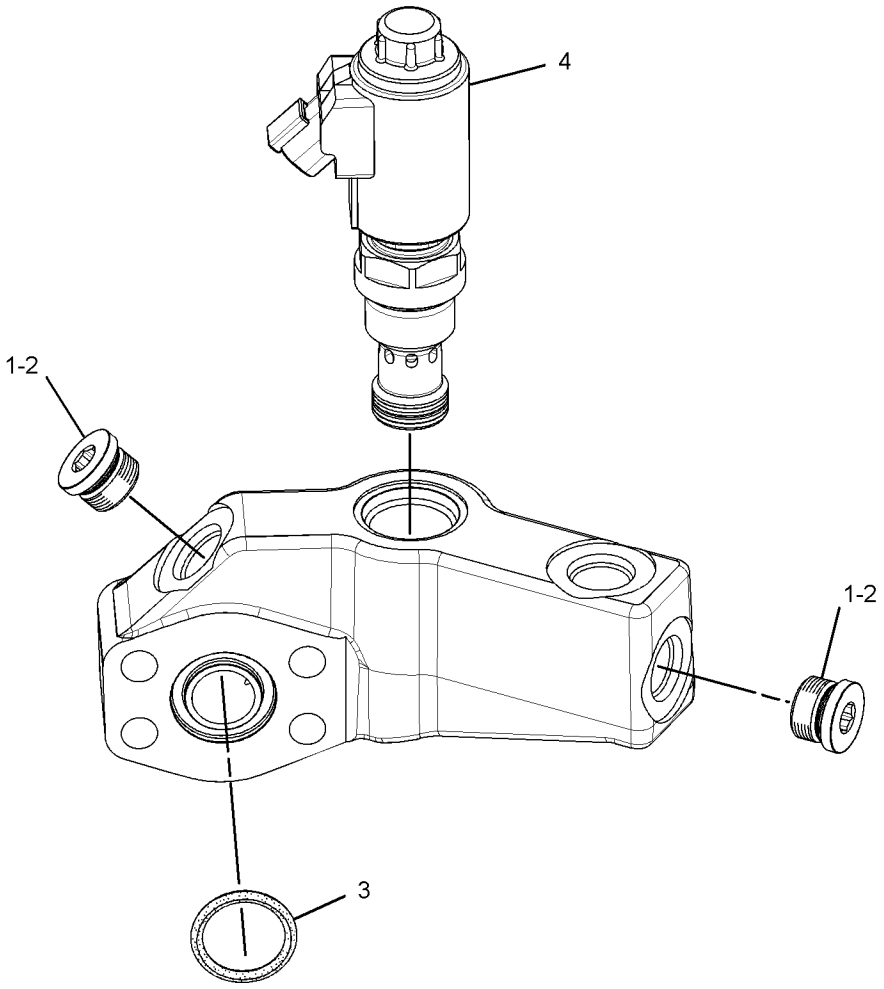

GRAPHIC #1 <END> g01748380

295-7689 VALVE GP-SOLENOID

S/N: CH91-UP
PART OF 431-7217 LINES GP-RIDE CONTROL
AN ATTACHMENT

SMCS-5479 **i05519561**

NOTE	REF NO	GRAPHIC REF	PART NUMBER	QTY	PART NAME 1 2 3 4 5 6 (PRODUCT LEVEL)	SEE PAGE
	1	1	**9S-8005**	2	PLUG (3/4-16-THD)	
	2	1	**3K-0360**	2	SEAL-O-RING	
	3	1	**4J-5267**	1	SEAL-O-RING	
Y	4	1	**295-8553**	1	VALVE GP-SOLENOID (RIDE CONTROL)	714

Y - SEPARATE ILLUSTRATION

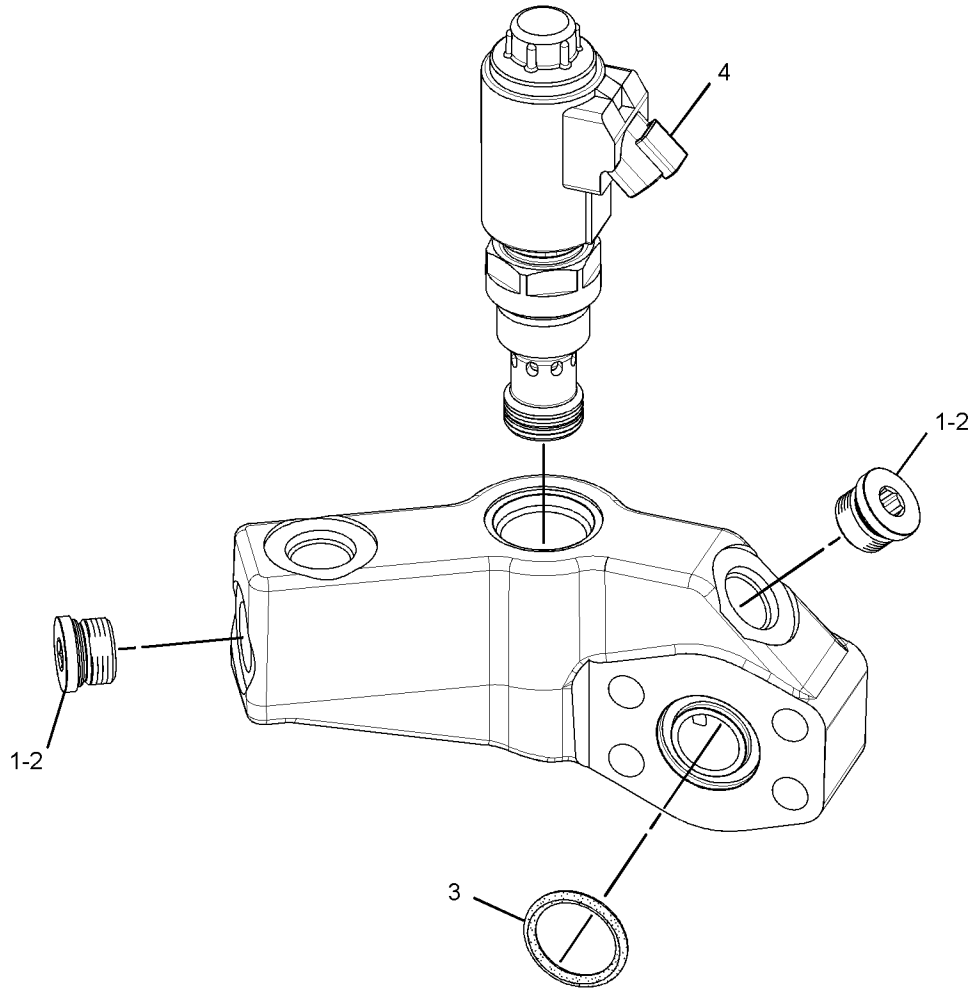

GRAPHIC #1 <END> g01748381

295-8553 VALVE GP-SOLENOID

S/N: CH91-UP
24-VOLT
PART OF 295-7688, 295-7689, 299-3659 VALVE GP-SOLENOID
AN ATTACHMENT

SMCS-5479 **i05519562**

NOTE	REF NO	GRAPHIC REF	PART NUMBER	QTY	PART NAME 1 2 3 4 5 6 (PRODUCT LEVEL)	SEE PAGE
J	1	1	**6V-3922**	1	SEAL-O-RING	
J	2	1	**6V-5326**	1	SEAL-O-RING	
J	3	1	**173-8277**	1	SEAL-O-RING	
	4	1	**177-6628**	1	COVER	
J	5	1	**177-6970**	1	SEAL-O-RING	
	6	1	**195-7747**	1	SOLENOID	
					PARTS SHOWN IN GRAPHIC(S) WITHOUT A REFERENCE NUMBER ARE NOT SERVICED SEPARATELY	
					AVAILABLE REPAIR KIT(S):	
J			**331-1371**	1	KIT-SEAL (SOLENOID VALVE)	
					(ALSO INCLUDES BACKUP RING)	

J - KIT MARKED J SERVICES PART(S) MARKED J

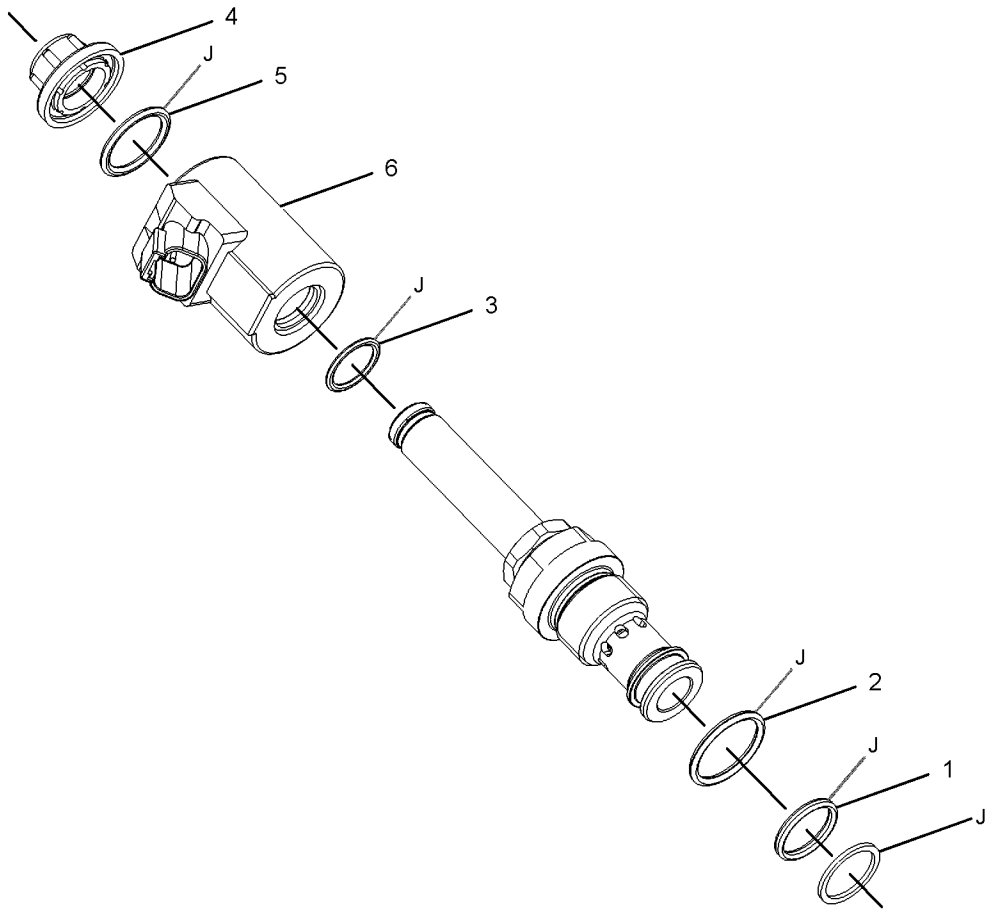

GRAPHIC #1 <END> g01715881

298-5050 VALVE GP-SOLENOID

S/N: CH91-UP
PART OF 254-2639 VALVE GP-CONTROL
AN ATTACHMENT

SMCS-5479 **i05527510**

NOTE	REF NO	GRAPHIC REF	PART NUMBER	QTY	PART NAME 1 2 3 4 5 6 (PRODUCT LEVEL)	SEE PAGE
	1	1	**279-9121**	1	VALVE GP-SOLENOID (JOYSTICK STEER, HYD CAB RISER)	
		1	**298-5184**	1	KIT-SEAL (SOLENOID VALVE)	
					(INCLUDES SEAL-O-RINGS & BACKUP RINGS)	
M	2	1	**262-7741**	2	BOLT-SOCKET HEAD (M6X1X55-MM)	
M	3	1	**166-8637**	2	SCREW-SOCKET HEAD (M4X0.7X12-MM)	
	4	1	**316-6564**	2	SEAL-O-RING	
	5	1	**5W-6378**	1	SEAL-O-RING	

M - METRIC PART

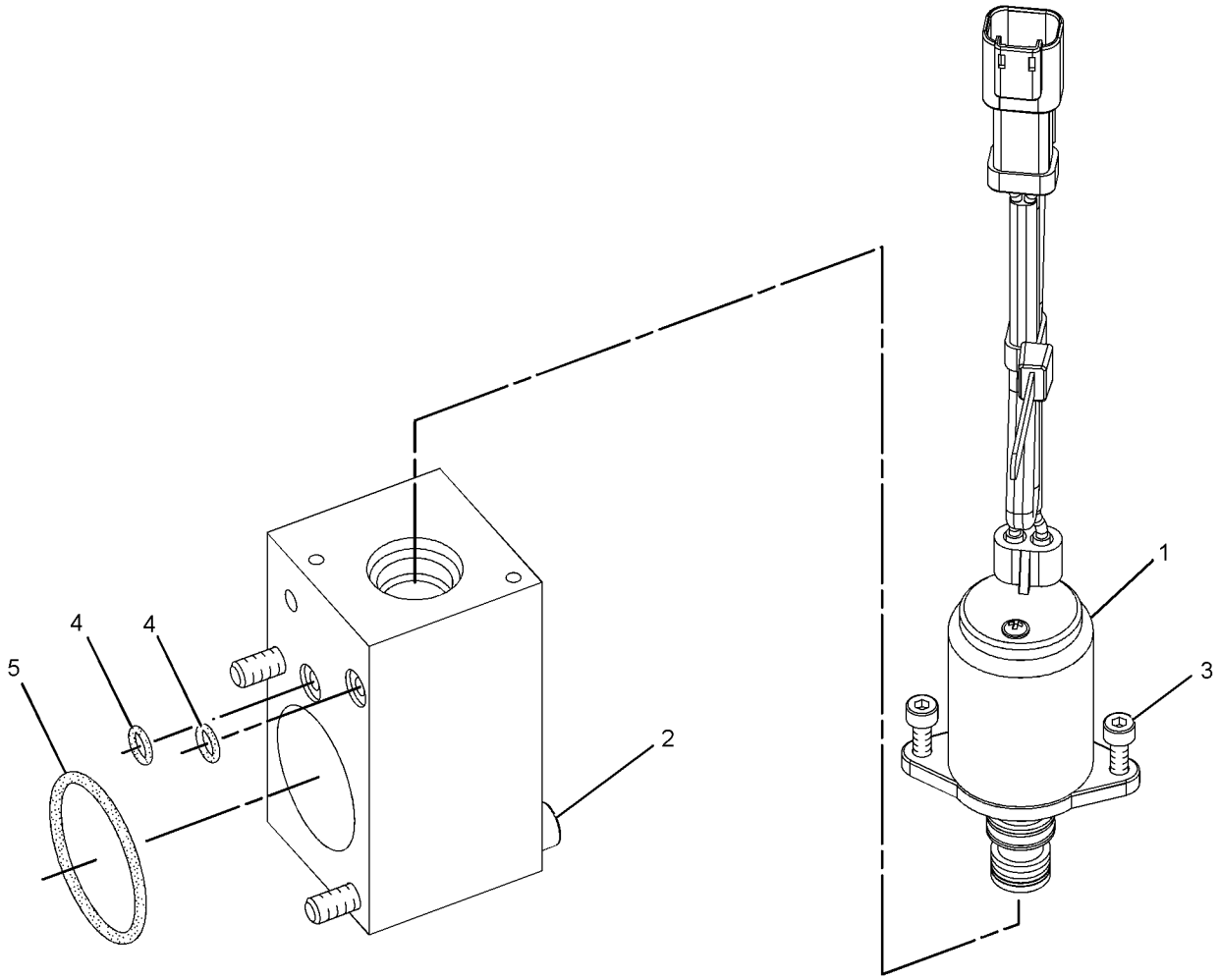

GRAPHIC #1 <END> g01590013

298-5183 VALVE GP-SOLENOID

S/N: CH91-UP
PART OF 254-2639 VALVE GP-CONTROL
AN ATTACHMENT

SMCS-5479 **i05527511**

NOTE	REF NO	GRAPHIC REF	PART NUMBER	QTY	PART NAME 1 2 3 4 5 6 (PRODUCT LEVEL)	SEE PAGE
	1	1	**279-9121**	1	VALVE GP-SOLENOID (JOYSTICK STEER, HYD CAB RISER)	
		1	**298-5184**	1	KIT-SEAL	
					(INCLUDES SEAL-O-RINGS & BACKUP RINGS)	
	2	1	**298-5277**	1	PLUG AS	
		1	**316-7897**	1	SEAL	
M	3	1	**262-7741**	2	BOLT-SOCKET HEAD (M6X1X55-MM)	
M	4	1	**166-8637**	2	SCREW-SOCKET HEAD (M4X0.7X12-MM)	
	5	1	**316-6564**	2	SEAL-O-RING	
	6	1	**5W-6378**	1	SEAL-O-RING	

M - METRIC PART

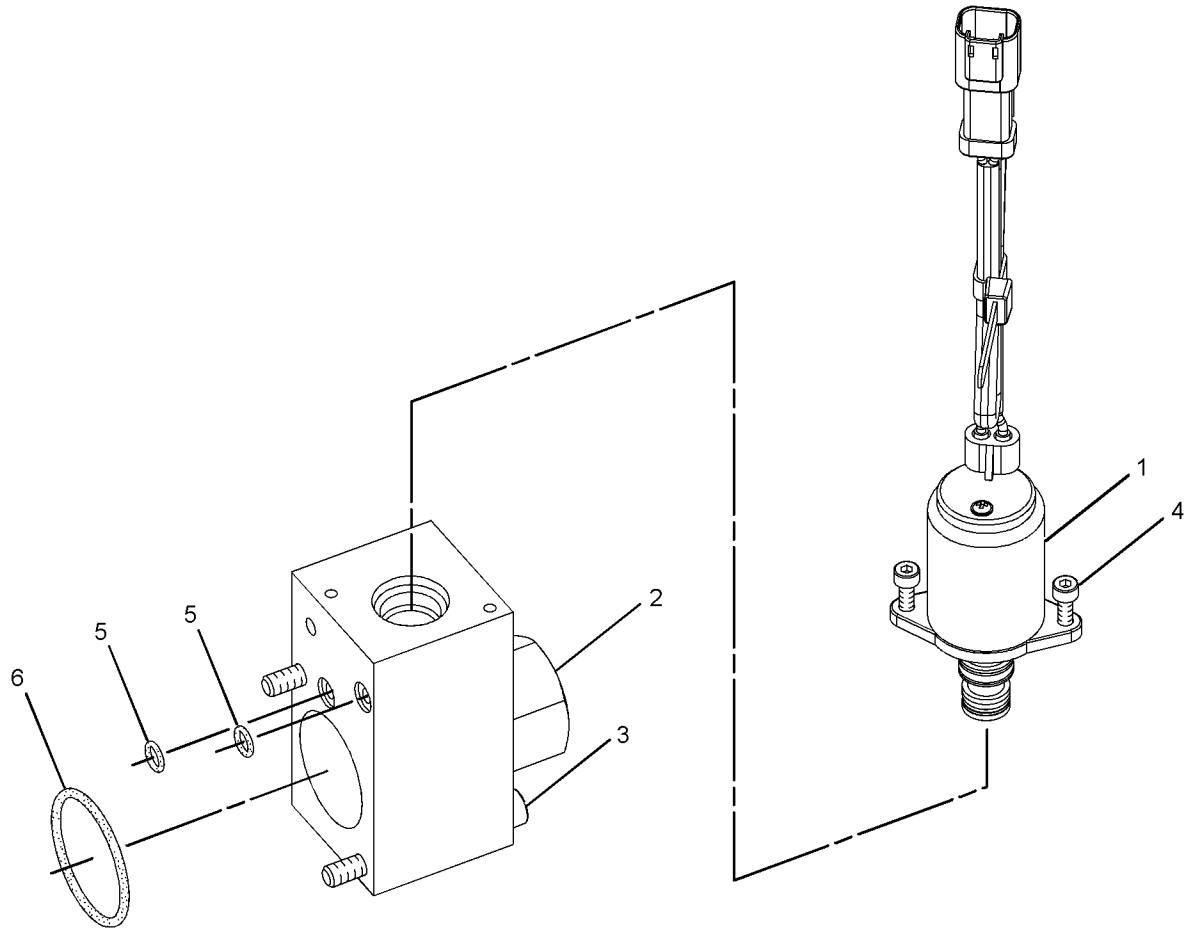

GRAPHIC #1 <END> g01590048

299-3659 VALVE GP-SOLENOID—RIDE CONTROL

S/N: CH91-UP
PART OF 431-7217 LINES GP-RIDE CONTROL
AN ATTACHMENT

SMCS-5479 **i06231487**

NOTE	REF NO	GRAPHIC REF	PART NUMBER	QTY	PART NAME 1 2 3 4 5 6 (PRODUCT LEVEL)	SEE PAGE
Y	1	1	**295-8553**	1	VALVE GP-SOLENOID (RIDE CONTROL)	714

Y - SEPARATE ILLUSTRATION

ITEMS MARKED "Z" IN GRAPHIC ARE NOT SERVICED SEPARATELY

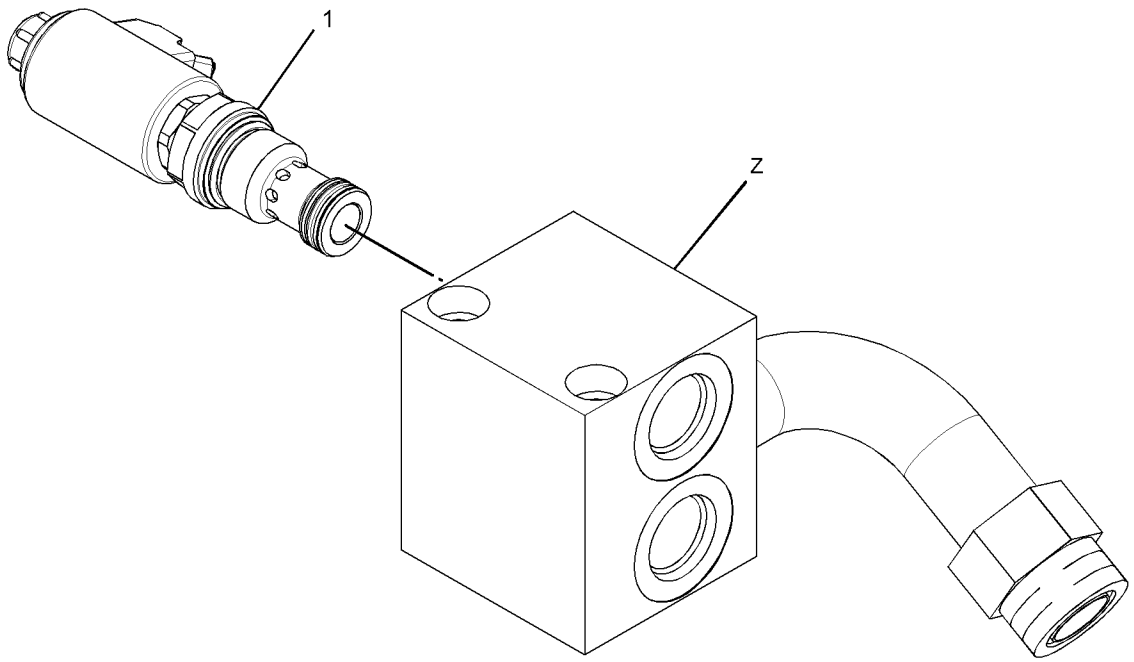

GRAPHIC #1 <END> g01731755

367-9241 VALVE GP-SOLENOID—TRAVEL MOTOR

S/N: CH91-UP

PART OF 251-7934 VALVE & LINES GP-TRAVEL CONT

ALSO AN ATTACHMENT

SMCS-5479 **i05510375**

NOTE	REF NO	GRAPHIC REF	PART NUMBER	QTY	PART NAME 1 2 3 4 5 6 (PRODUCT LEVEL)	SEE PAGE
Y	1	1	**245-2758**	1	VALVE GP-SOLENOID & PRESS REDC (CREEPER SPEED) (TRAVEL MOTOR)	723
	2	1	**293-2842**	1	PISTON	
	3	1	**123-5800**	1	PLUG AS	

Y - SEPARATE ILLUSTRATION

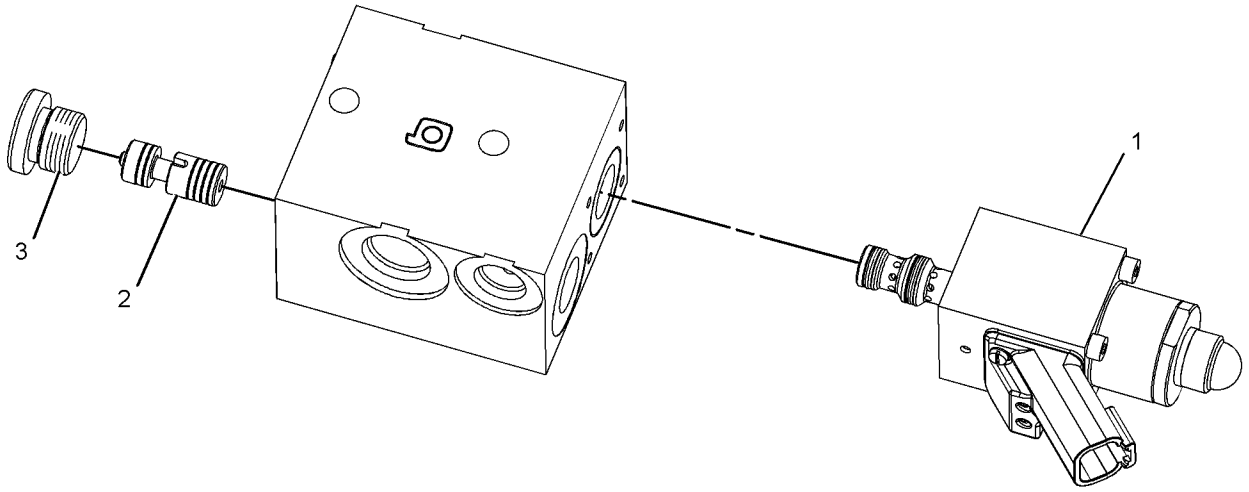

GRAPHIC #1 <END> g02523317

446-7142 VALVE GP-SOLENOID

S/N: CH91-UP

PART OF 461-6011 VALVE GP-SOLENOID

ALSO AN ATTACHMENT

SMCS-5479 **i07107307**

NOTE	REF NO	GRAPHIC REF	PART NUMBER	QTY	PART NAME 1 2 3 4 5 6 (PRODUCT LEVEL)	SEE PAGE
M	1	1	**8T-3998**	2	BOLT (M4X0.7X12-MM)	
	2	1	**368-6792**	1	FLANGE	
	3	1	**8C-3098**	1	SEAL-O-RING	
	4	1	**6M-5062**	1	SEAL-O-RING	
	5	1	**1H-1023**	1	SEAL-O-RING	
					PARTS SHOWN IN GRAPHIC(S) WITHOUT A REFERENCE NUMBER ARE NOT SERVICED SEPARATELY	

M - METRIC PART

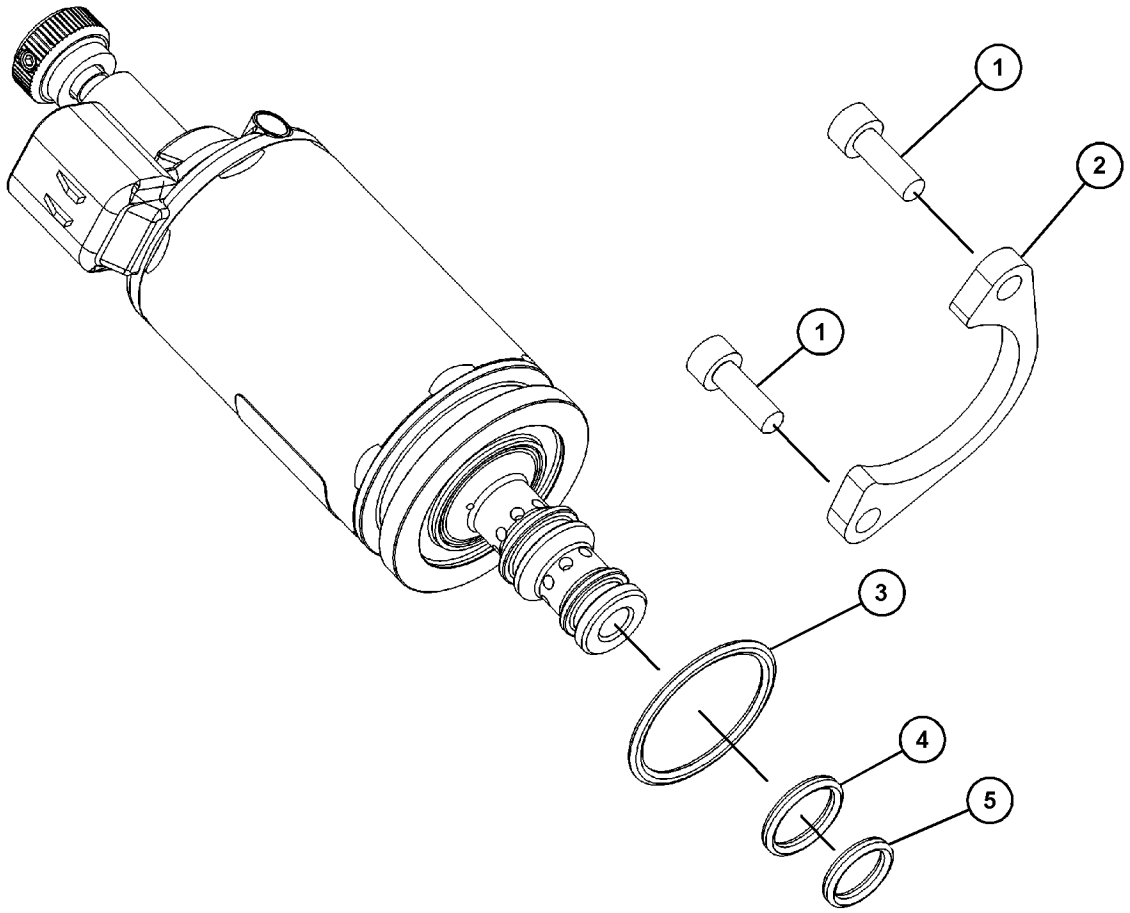

GRAPHIC #1 <END> g03704156

446-7144 VALVE GP-SOLENOID

S/N: CH91-UP
PART OF 461-6011 VALVE GP-SOLENOID
ALSO AN ATTACHMENT

SMCS-5479 **i07107308**

NOTE	REF NO	GRAPHIC REF	PART NUMBER	QTY	PART NAME 1 2 3 4 5 6 (PRODUCT LEVEL)	SEE PAGE
M	1	1	**8T-3998**	2	BOLT (M4X0.7X12-MM)	
	2	1	**368-6792**	1	FLANGE	
	3	1	**8C-3098**	1	SEAL-O-RING	
	4	1	**6M-5062**	1	SEAL-O-RING	
	5	1	**1H-1023**	1	SEAL-O-RING	
					PARTS SHOWN IN GRAPHIC(S) WITHOUT A REFERENCE NUMBER ARE NOT SERVICED SEPARATELY	

M - METRIC PART

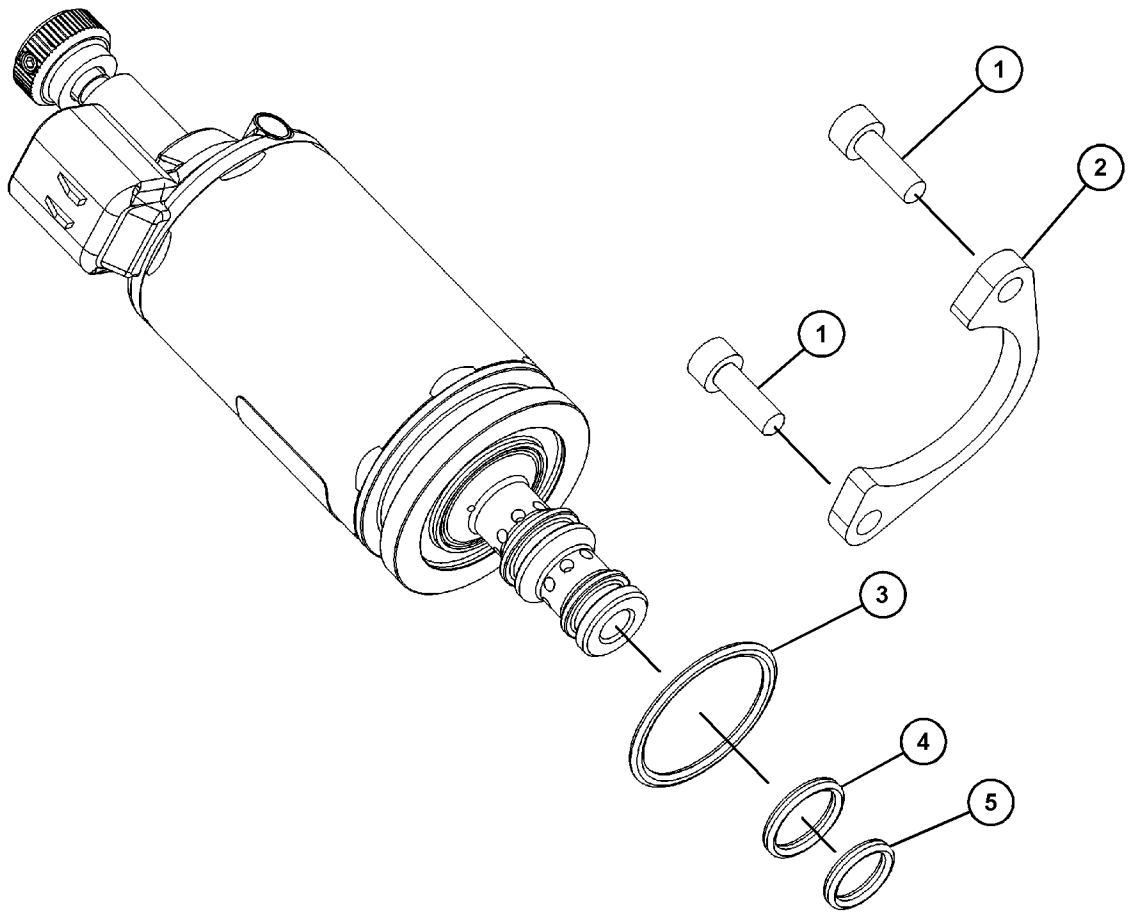

GRAPHIC #1 <END> g03704156

461-6011 VALVE GP-SOLENOID–PILOT

S/N: CH91-UP
PART OF 461-5997 VALVE GP-PILOT
ALSO AN ATTACHMENT

SMCS-5479 **i07107298**

NOTE	REF NO	GRAPHIC REF	PART NUMBER	QTY	PART NAME 1 2 3 4 5 6 (PRODUCT LEVEL)	SEE PAGE
	1	1	**368-3169**	1	BODY-VALVE	
J	2	1	**284-8113**	1	VALVE GP-PRESSURE REDUCING (PILOT)	
M		1	**5W-9420**	1	LOCKNUT (M8X1.25-THD)	
		1	**8U-1218**	1	CAP-NUT	
Y	3	1	**199-1153**	1	VALVE GP-SOLENOID (OSCILLATING AXLE)	706
Y	3A	1	**199-1153**	1	VALVE GP-SOLENOID (SWING BRAKE)	706
Y	3B	1	**199-1153**	1	VALVE GP-SOLENOID (IMPLEMENT LOCKOUT)	706
Y	4	1	**251-5594**	1	VALVE GP-SOLENOID (TRANSMISSION GEAR)	708
Y	5	1	**446-7142**	1	VALVE GP-SOLENOID (SWING PUMP)	719
Y	5A	1	**446-7142**	1	VALVE GP-SOLENOID (MAIN PUMP)	719
Y	5B	1	**446-7142**	1	VALVE GP-SOLENOID (PILOT, TRAVEL)	719
Y	6	1	**446-7144**	1	VALVE GP-SOLENOID (TRAVEL MOTOR)	720
Y	7	1	**196-7486**	1	VALVE GP-SOLENOID (HEAVY LIFT)	703
L	8	1	**333-8008**	1	VALVE GP-DIRECTIONAL CONTROL (AUTOMATIC ENGINE SPEED CONTROL)	
		1	**161-6154**	1	SEAL-O-RING	
	9	1	**123-0175**	1	BODY	
	10	1	**161-6154**	2	SEAL-O-RING	
	11	1	**264-4737**	1	VALVE AS-CHECK (HEAVY LIFT)	
		1	**8C-3085**	1	SEAL-O-RING	
		1	**8C-3131**	1	SEAL-O-RING	
		1	**213-9243**	1	SEAL-O-RING	
	12	1	**123-0179**	1	VALVE GP-CHECK (IMPLEMENT LOWERING)	
		1	**121-8112**	1	SEAL-O-RING	
	13	1	**284-8115**	1	VALVE AS-CHECK (PILOT RELIEF)	
		1	**203-0213**	1	SEAL-O-RING	
	14	1	**123-0173**	1	PLUG	
M	15	1	**8T-0269**	2	BOLT-SOCKET HEAD (M6X1X20-MM)	
	16	1	**9S-8006**	1	PLUG (7/8-14-THD)	
	17	1	**2M-9780**	1	SEAL-O-RING	
	18	1	**6V-3922**	1	SEAL-O-RING	
					AVAILABLE REPAIR KIT(S):	
J			**290-4315**	1	KIT-SEAL (PRESSURE REDUCING VALVE)	
L			**210-1925**	1	KIT-SEAL	
					(EACH SEAL KIT INCLUDES O-RING SEALS & BACK-UP RINGS)	

J - KIT MARKED J SERVICES PART(S) MARKED J
L - KIT MARKED L SERVICES PART(S) MARKED L
M - METRIC PART
Y - SEPARATE ILLUSTRATION

461-6011 **VALVE GP-SOLENOID** (contd.) **i07107298**

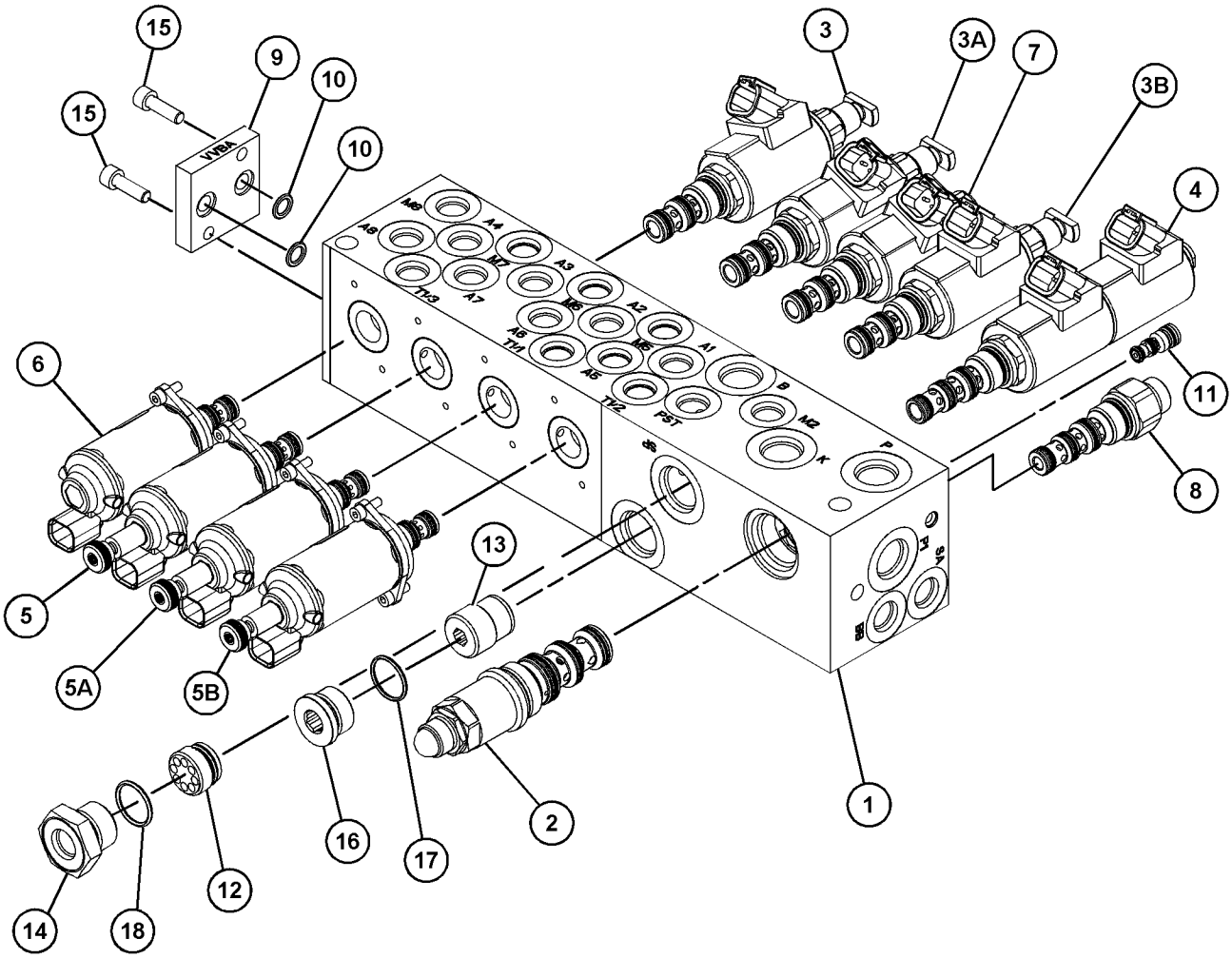

GRAPHIC #1 <END> g03873866

245-2758 VALVE GP-SOLENOID & PRESS REDC

S/N: CH91-UP
PART OF 367-9241 VALVE GP-SOLENOID
ALSO AN ATTACHMENT

SMCS-5467, 5479 **i05510376**

NOTE	REF NO	GRAPHIC REF	PART NUMBER	QTY	PART NAME 1 2 3 4 5 6 (PRODUCT LEVEL)	SEE PAGE
M	1	1	**5W-9420**	1	LOCKNUT (M8X1.25-THD)	
M	2	1	**154-0172**	4	BOLT-SOCKET HEAD (M4X0.7-THD)	
	3	1	**8U-1218**	1	CAP-NUT	
	4	1	**1H-1023**	1	SEAL-O-RING	
	5	1	**6M-5062**	1	SEAL-O-RING	
	6	1	**5K-9090**	1	SEAL-O-RING	

M - METRIC PART

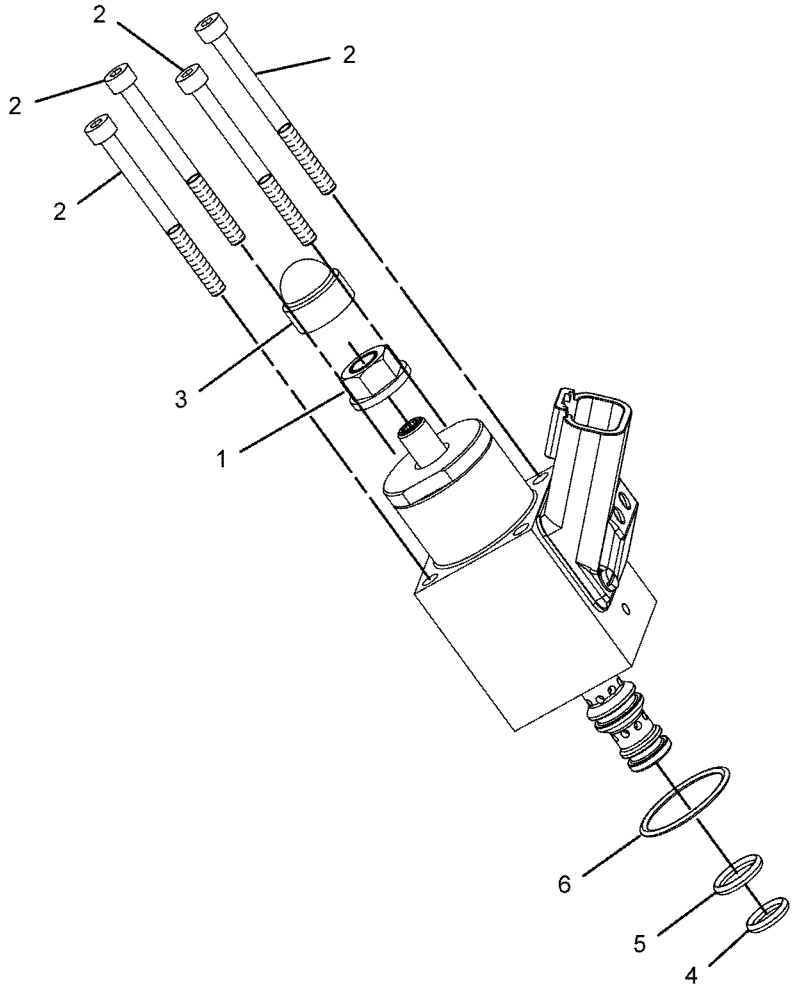

GRAPHIC #1 <END> g01046358

322-6342 VALVE GP-SOLENOID & PRESS REDC

S/N: CH91-UP

PART OF 358-9923 VALVE GP-COMBINATION, 252-5984 VALVE GP-CONTROL AN ATTACHMENT

SMCS-5467, 5479 **i05510252**

NOTE	REF NO	GRAPHIC REF	PART NUMBER	QTY	PART NAME 1 2 3 4 5 6 (PRODUCT LEVEL)	SEE PAGE
	1	1	**322-6691**	1	SCREEN-FILTER	
	2	1	**210-1330**	1	KIT-SEAL (SOLENOID VALVE)	
					(INCLUDES O-RING SEALS)	

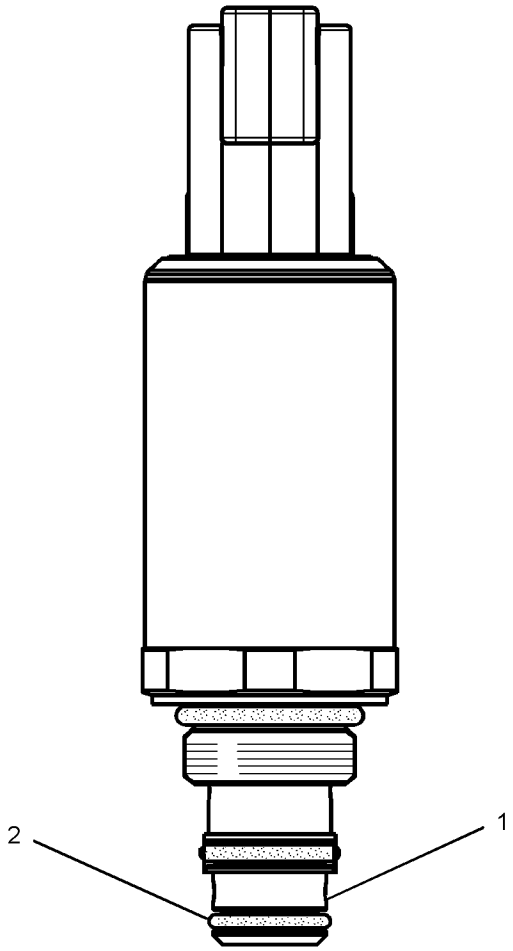

GRAPHIC #1 <END> g01515534

425-9130 BOOM AR

S/N: CH91-UP
PART OF 453-8185, 473-2841, 517-3262 DISTRIBUTION AR
AN ATTACHMENT

SMCS-6000 **i07423794**

NOTE	PART NUMBER	QTY	PART NAME 1 2 3 4 5 6 (PRODUCT LEVEL)	SEE PAGE
Y	*250-1744*	1	BOOM GP	726
Y	*261-3608*	1	COVER GP-PLATFORM	841
Y	*368-3220*	2	CYLINDER & SEAL GP-BOOM	344
			—OR—	
Y	*533-9612*	2	CYLINDER & SEAL GP-BOOM	346
Y	*368-3222*	1	CYLINDER & SEAL GP-STICK	351
			—OR—	
Y	*533-9617*	1	CYLINDER & SEAL GP-STICK	352
Y	*435-3441*	1	FILM GP (1-PIECE BOOM)	911
Y	*337-5789*	1	LIGHTING GP-FLOOD (BOOM)	169
Y	*455-4589*	1	LINES GP-GREASE (SWING GEAR)	734
Y	*455-9337*	1	LINES GP-GREASE (1-PIECE)	738

Y - SEPARATE ILLUSTRATION

<END>

446-2727 BOOM AR

S/N: CH91-UP
AN ATTACHMENT

SMCS-6000 **i05927179**

NOTE	PART NUMBER	QTY	PART NAME 1 2 3 4 5 6 (PRODUCT LEVEL)	SEE PAGE
Y	*250-2150*	1	BOOM GP-FORE (VARIABLE ADJUSTABLE)	728
Y	*250-2078*	1	BOOM GP-STUB (VARIABLE ADJUSTABLE)	730
Y	*368-3219*	2	CYLINDER & SEAL GP-BOOM (STUB)	343
Y	*368-3221*	1	CYLINDER & SEAL GP-BOOM (FORE)	345
Y	*368-3222*	1	CYLINDER & SEAL GP-STICK	351
Y	*435-3504*	1	FILM GP	912
Y	*337-5789*	1	LIGHTING GP-FLOOD (BOOM)	169
Y	*455-4589*	1	LINES GP-GREASE (SWING GEAR)	734
Y	*455-4591*	1	LINES GP-GREASE (VARIABLE ADJUSTABLE)	735

Y - SEPARATE ILLUSTRATION

<END>

250-1744 BOOM GP—1-PIECE

S/N: CH91-UP
PART OF 425-9130 BOOM AR
AN ATTACHMENT

SMCS-6301, 6302, 6460, 6501, 6516, 6521, 6535, 6536 **i05922241**

NOTE	REF NO	GRAPHIC REF	PART NUMBER	QTY	PART NAME 1 2 3 4 5 6 (PRODUCT LEVEL)	SEE PAGE
B	1	1	**7Y-2497**	1	SHIM (1.6-MM THK)	
B	2	1	**7Y-2498**	1	SHIM (1.6-MM THK)	
	3	1	**087-6444**	2	PLATE	
B	4	1	**093-0083**	1	SHIM (1-MM THK)	
B	5	1	**093-0084**	1	SHIM (1-MM THK)	
B	6	1	**093-0090**	1	SHIM (1-MM THK)	
B	7	1	**093-0115**	1	SHIM (2-MM THK)	
B	8	1	**093-0116**	1	SHIM (2-MM THK)	
B	9	1	**093-0122**	1	SHIM (2-MM THK)	
	10	1	**093-0349**	2	WASHER (22X60X6-MM THK)	
	11	1	**128-5858**	2	SPACER (103X150X8-MM THK)	
	12	1	**188-1361**	1	PIN AS	
	13	1	**188-3351**	1	PIN	
	14	1	**202-3165**	1	PIN AS	
	15	1	**385-4301**	1	BOOM & BEARING AS	
	15A	1	**228-5615**	2	BUSHING	
		1	**7X-4803**	2	SEAL-LIP TYPE	
B	16	1	**133-2425**	1	SHIM (0.5-MM THK)	
B	17	1	**113-2127**	1	SHIM (0.5-MM THK)	
B	18	1	**133-2427**	1	SHIM (0.5-MM THK)	
M	19	1	**7X-2553**	6	BOLT (M16X2X40-MM)	
	20	1	**7X-4803**	2	SEAL-LIP TYPE	
	21	1	**8T-4123**	2	WASHER (22X35X3.5-MM THK)	
M	22	1	**8T-4780**	2	BOLT (M20X2.5X30-MM)	
	23	1	**9X-8257**	6	WASHER (17.5X30X3.5-MM THK)	

B - USE AS REQUIRED
M - METRIC PART

250-1744 **BOOM GP** (contd.) **i05922241**

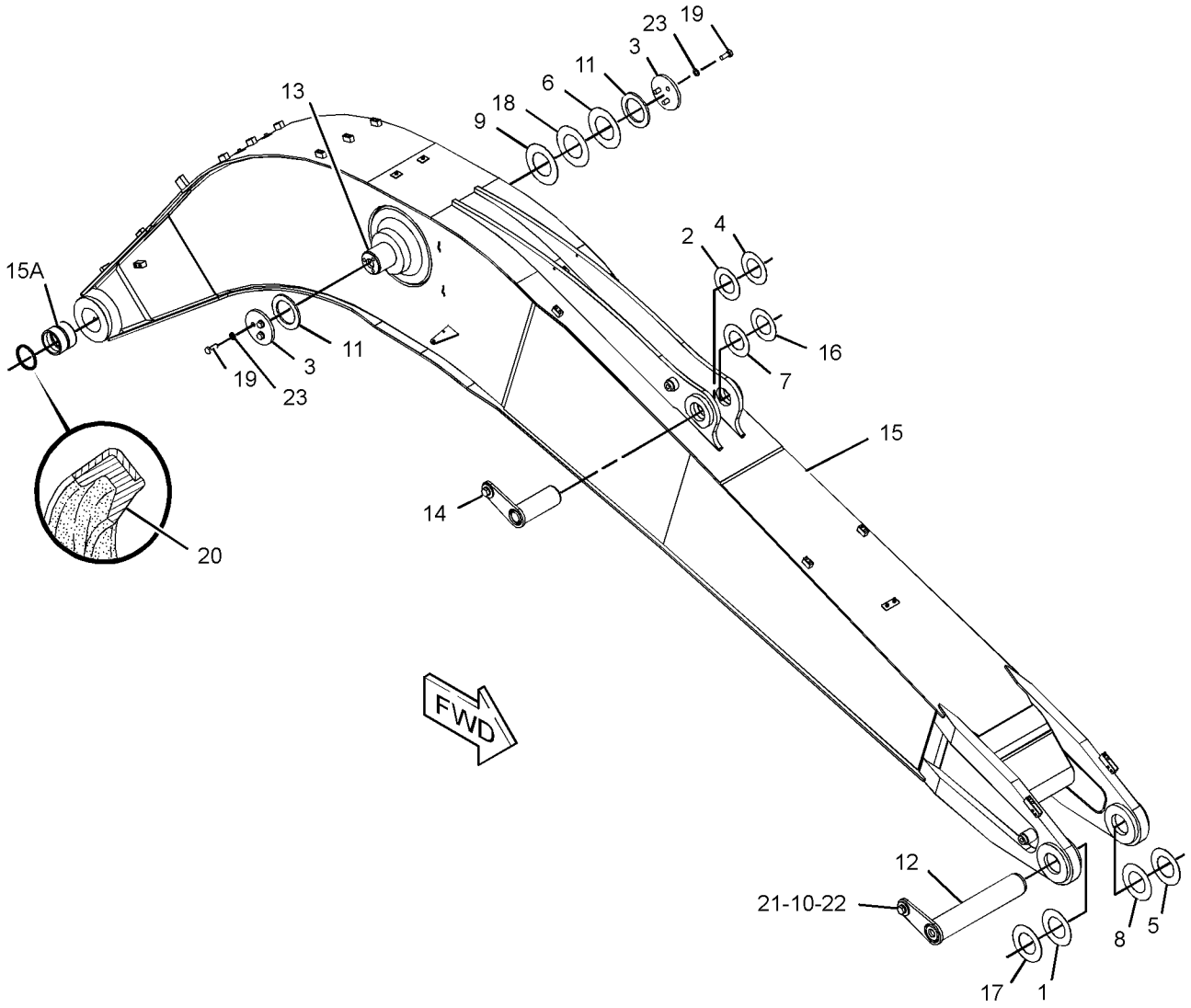

GRAPHIC #1 <END> g01326017

250-2150 BOOM GP-FORE—VARIABLE ADJUSTABLE

S/N: CH91-UP
PART OF 446-2727 BOOM AR
AN ATTACHMENT

SMCS-6535 **i05927198**

NOTE	REF NO	GRAPHIC REF	PART NUMBER	QTY	PART NAME 1 2 3 4 5 6 (PRODUCT LEVEL)	SEE PAGE
B	1	1	**4I-0575**	1	SHIM (1-MM THK)	
B	2	1	**4I-0576**	1	SHIM (1.6-MM THK)	
B	3	1	**4I-0577**	1	SHIM (2-MM THK)	
B	4	1	**7Y-2497**	1	SHIM (1.6-MM THK)	
B	5	1	**7Y-2498**	1	SHIM (1.6-MM THK)	
B	6	1	**093-0083**	1	SHIM (1-MM THK)	
B	7	1	**093-0084**	1	SHIM (1-MM THK)	
B	8	1	**093-0115**	1	SHIM (2-MM THK)	
B	9	1	**093-0116**	1	SHIM (2-MM THK)	
	10	1	**093-0349**	3	WASHER (22X60X6-MM THK)	
B	11	1	**133-2428**	1	SHIM (0.5-MM THK)	
	12	1	**187-9307**	2	BOSS	
	13	1	**188-1361**	1	PIN AS	
	14	1	**188-3357**	1	PIN AS	
	15	1	**202-3165**	1	PIN AS	
	16	1	**254-7611**	1	BOOM & BEARING AS	
	16A	1	**190-5334**	2	BUSHING	
B	17	1	**133-2425**	1	SHIM (0.5-MM THK)	
B	18	1	**113-2127**	1	SHIM (0.5-MM THK)	
	19	1	**8T-4123**	3	WASHER (22X35X3.5-MM THK)	
M	20	1	**8T-4780**	3	BOLT (M20X2.5X30-MM)	

B - USE AS REQUIRED
M - METRIC PART

250-2150 **BOOM GP-FORE** (contd.) **i05927198**

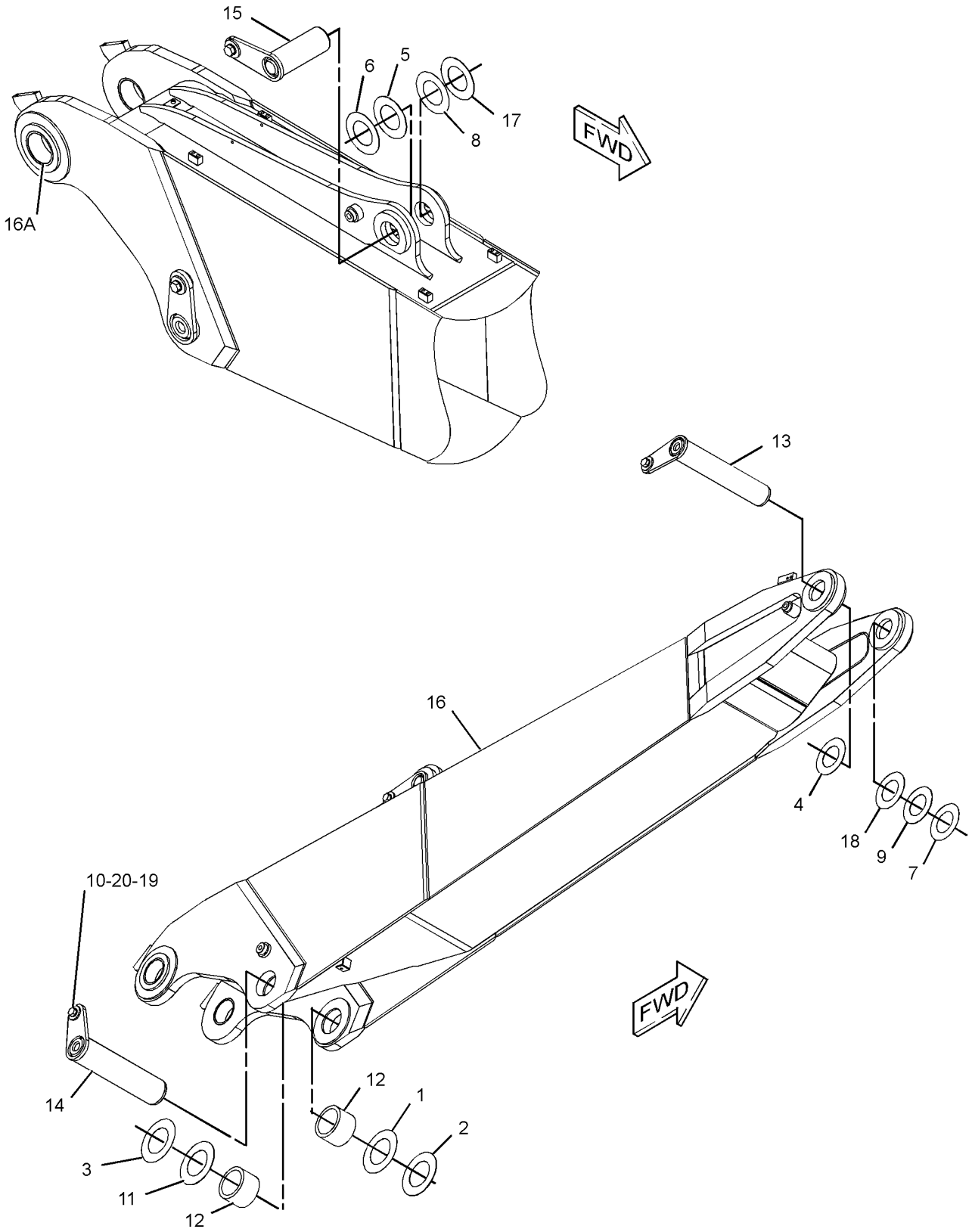

GRAPHIC #1 <END> g01325441

250-2078 BOOM GP-STUB—VARIABLE ADJUSTABLE

S/N: CH91-UP
PART OF 446-2727 BOOM AR
AN ATTACHMENT

SMCS-6536 **i05927199**

NOTE	REF NO	GRAPHIC REF	PART NUMBER	QTY	PART NAME 1 2 3 4 5 6 (PRODUCT LEVEL)	SEE PAGE
B	1	1	**7Y-3355**	2	SHIM (1.6-MM THK)	
	2	1	**087-6444**	2	PLATE	
B	3	1	**093-0090**	3	SHIM (1-MM THK)	
B	4	1	**093-0122**	2	SHIM (2-MM THK)	
	5	1	**093-0349**	1	WASHER (22X60X6-MM THK)	
	6	1	**128-5858**	2	SPACER (103X150X8-MM THK)	
	7	1	*187-9305*	2	BOSS	
	8	1	**188-3351**	1	PIN	
	9	1	**188-3354**	1	PIN AS	
	10	1	**254-7612**	1	BOOM & BEARING AS	
		1	**7Y-2397**	2	BUSHING	
		1	**257-2216**	2	BUSHING	
B	11	1	**133-2427**	2	SHIM (0.5-MM THK)	
M	12	1	**7X-2553**	6	BOLT (M16X2X40-MM)	
	13	1	**7X-4803**	2	SEAL-LIP TYPE	
	14	1	**8T-4123**	1	WASHER (22X35X3.5-MM THK)	
M	15	1	**8T-4780**	1	BOLT (M20X2.5X30-MM)	
	16	1	**9X-4597**	2	SEAL-LIP TYPE	
	17	1	**9X-8257**	6	WASHER (17.5X30X3.5-MM THK)	

B - USE AS REQUIRED
M - METRIC PART

250-2078 **BOOM GP-STUB (**contd.**)** **i05927199**

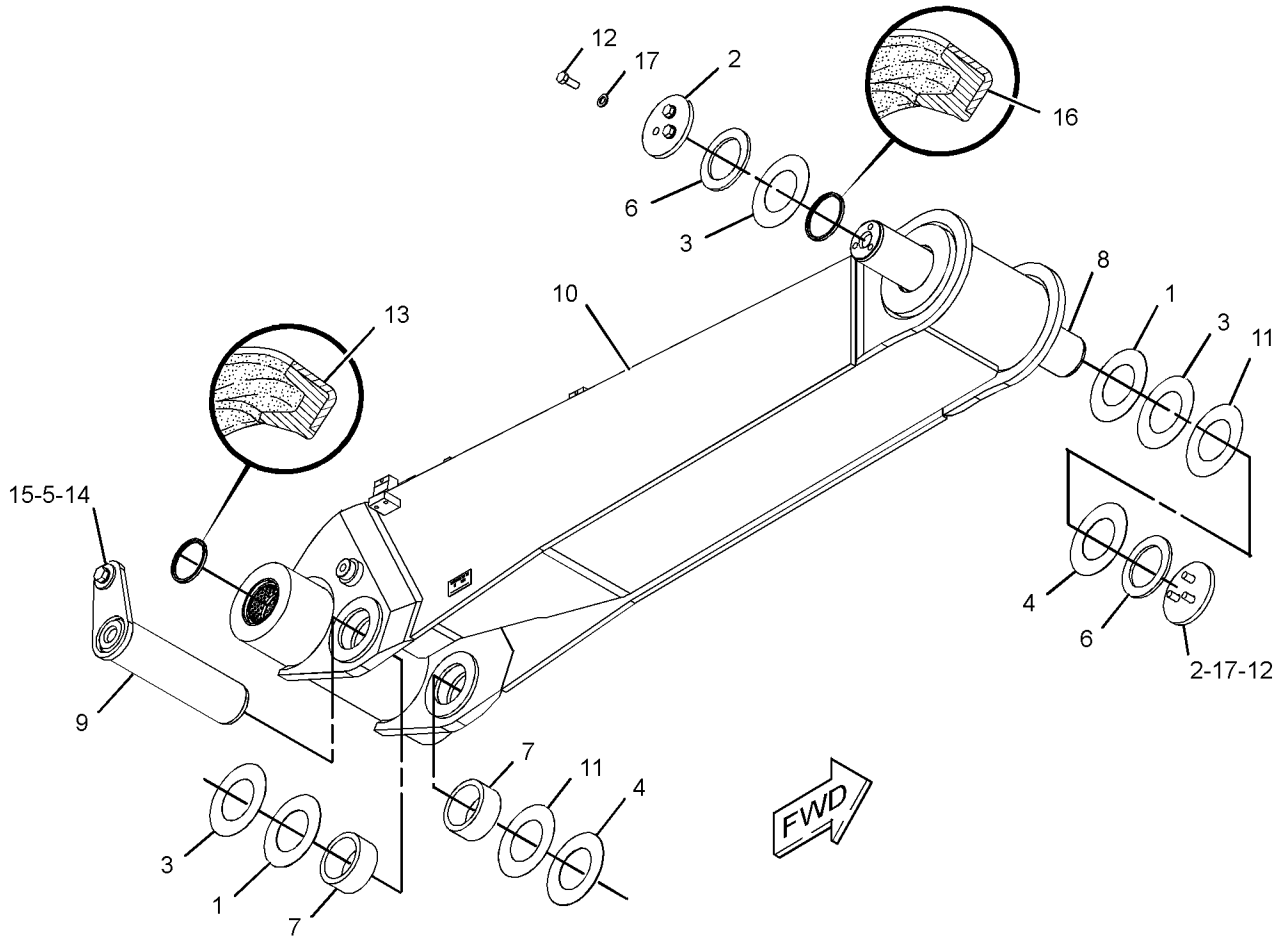

GRAPHIC #1 <END> g01324799

321-6697 INDICATOR GP-POSITION—RIDE CONTROL, STUB BOOM

S/N: CH91-UP
PART OF 446-2738 VALVE & LINES AR
AN ATTACHMENT

SMCS-7450 **i07694860**

NOTE	REF NO	GRAPHIC REF	PART NUMBER	QTY	PART NAME 1 2 3 4 5 6 (PRODUCT LEVEL)	SEE PAGE
	1	1	**317-6608**	1	CLAMP AS	
	2	1	**317-6609**	1	BRACKET	
M	3	1	**8T-4189**	2	BOLT (M8X1.25X20-MM)	
	4	1	**8T-4224**	2	WASHER-HARD (8.8X16X2-MM THK)	

M - METRIC PART

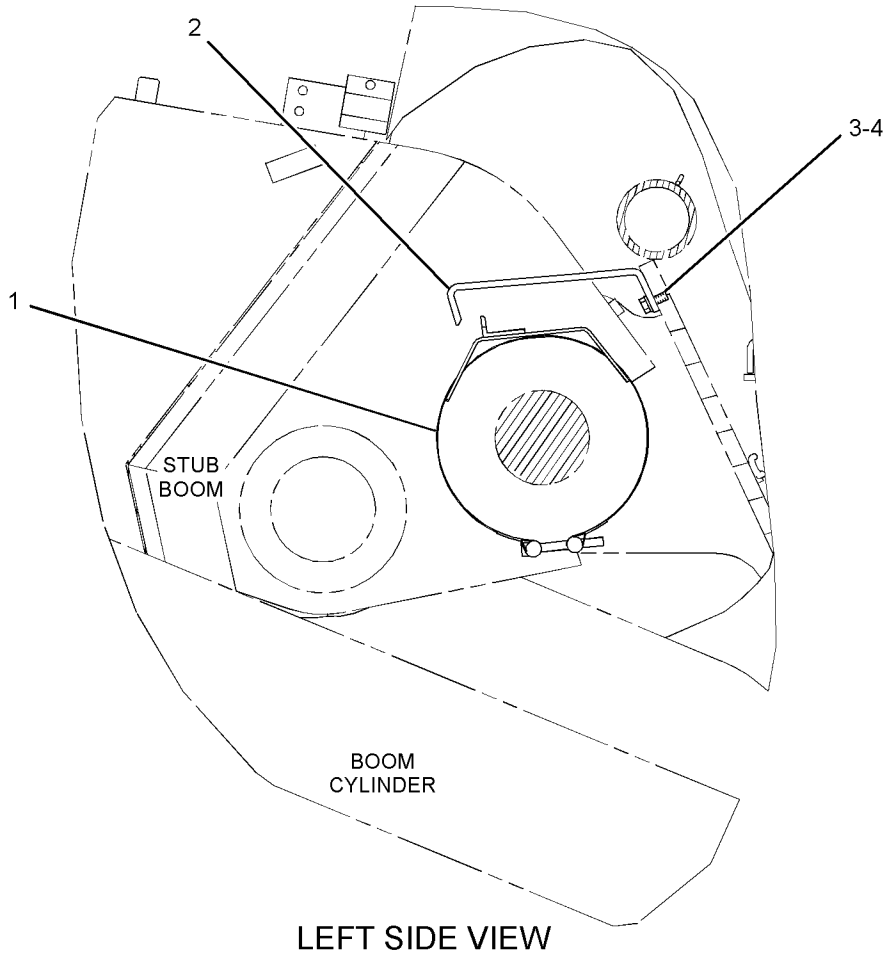

LEFT SIDE VIEW

GRAPHIC #1 <END> g01637634

321-6701 INDICATOR GP-POSITION—RIDE CONTROL, FOREBOOM

S/N: CH91-UP
PART OF 446-2738 VALVE & LINES AR
AN ATTACHMENT

SMCS-7450 **i07694861**

NOTE	REF NO	GRAPHIC REF	PART NUMBER	QTY	PART NAME 1 2 3 4 5 6 (PRODUCT LEVEL)	SEE PAGE
	1	1	**564-1945**	1	ANGLE	
M	2	1	**8T-4908**	1	BOLT (M8X1.25X25-MM)	

M - METRIC PART

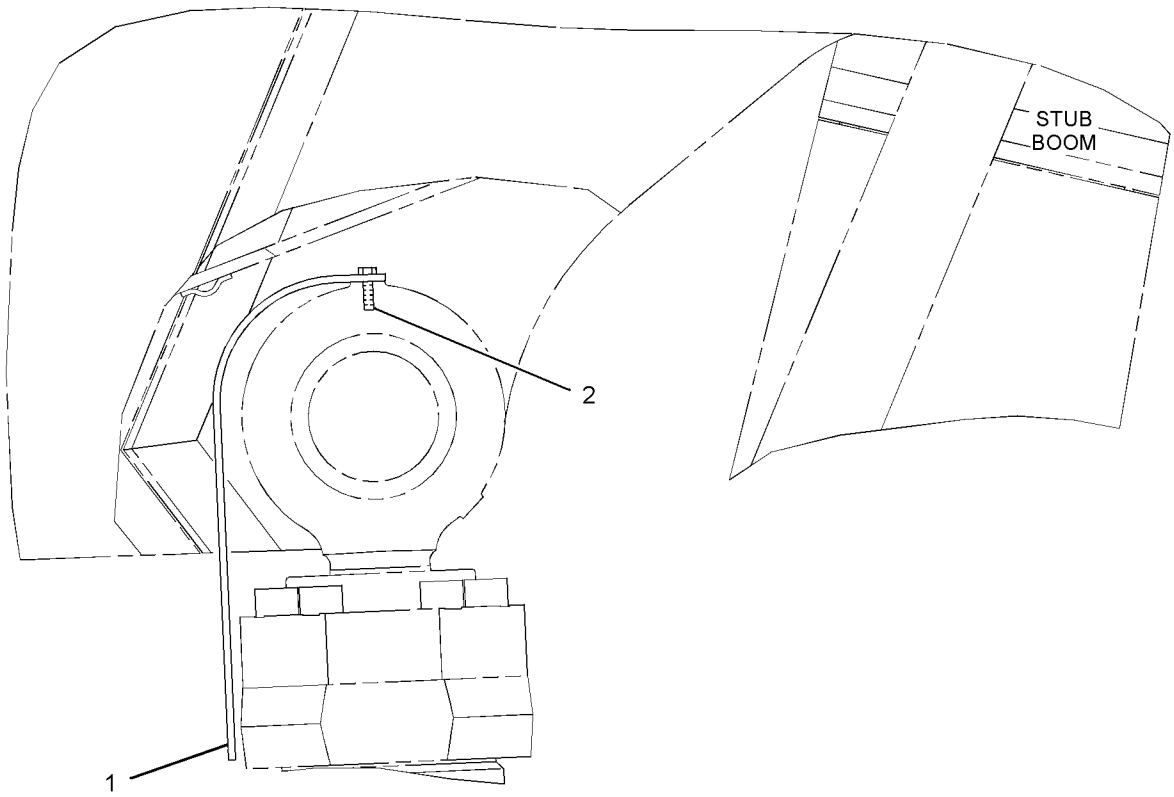

LEFT SIDE VIEW

GRAPHIC #1 <END> g01639765

455-4589 LINES GP-GREASE—SWING GEAR

S/N: CH91-UP
PART OF 425-9130, 446-2727 BOOM AR
AN ATTACHMENT

SMCS-7510 **i05922301**

NOTE	REF NO	GRAPHIC REF	PART NUMBER	QTY	PART NAME 1 2 3 4 5 6 (PRODUCT LEVEL)	SEE PAGE
	1	1	**5W-2817**	2	FITTING-GREASE	
	2	1	**117-7634**	2	FITTING-STRAIGHT	
	3	1	**117-7635**	2	ELBOW	
	4	1	*455-4590*	1	LINES GP-GREASE	
		1	**117-7630**	4	FITTING-ADAPTER	
		1	**117-7631**	4	FITTING-COUPLING	
D		1	**169-8323**		HOSE (6.2-M)	
B	5	1	**7K-1181**	3	STRAP-CABLE	

B - USE AS REQUIRED
D - ORDER BY THE METER

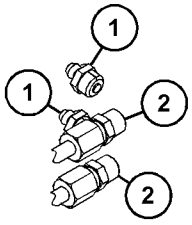

VIEW OF AREA A

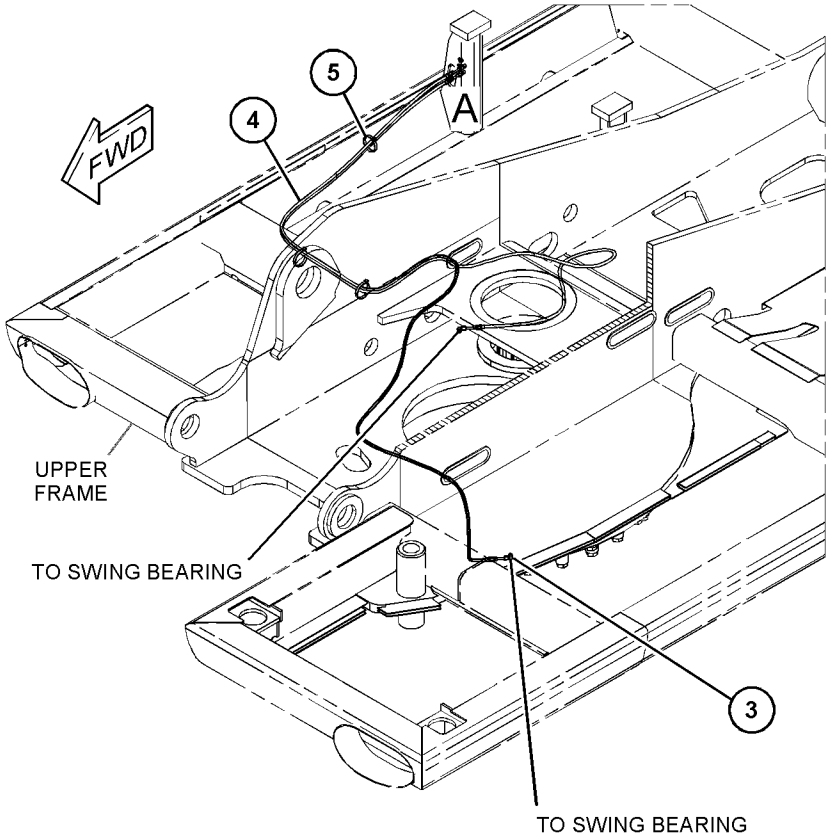

GRAPHIC #1 <END> g03743688

455-4591 LINES GP-GREASE—VARIABLE ADJUSTABLE

S/N: CH91-UP
PART OF 446-2727 BOOM AR
AN ATTACHMENT

SMCS-7510 **i06068145**

NOTE	REF NO	GRAPHIC REF	PART NUMBER	QTY	PART NAME 1 2 3 4 5 6 (PRODUCT LEVEL)	SEE PAGE
	1	1	**5W-2817**	1	FITTING-GREASE	
	2	1	**117-7634**	3	FITTING-STRAIGHT	
	3	1	**117-7635**	8	ELBOW	
	4	1	**141-2778**	1	FITTING-STRAIGHT	
	5	1	**166-0036**	1	FILTER GP-GREASE (BOOM, STICK CYLINDER BEARING)	
		1	**5W-1701**	1	WASHER (22X27X1.5-MM THK)	
		1	**168-3158**	1	FILTER-GREASE (BOOM, STICK CYLINDER BEARING)	
Y	6	1	*455-4592*	1	LINES GP-GREASE (VARIABLE ADJUSTABLE BOOM)	737
M	7	1	**274-8353**	2	BOLT-SOCKET HEAD (M5X0.8X30-MM)	
M	8	1	**295-4155**	1	BOLT-SOCKET HEAD (M5X0.8X35-MM)	
B	9	1	**7K-1181**	12	STRAP-CABLE	
	10	1	**203-4561**	1	TUBE	
	11	1	**203-4562**	1	TUBE	

B - USE AS REQUIRED
M - METRIC PART
Y - SEPARATE ILLUSTRATION

455-4591 **LINES GP-GREASE (**contd.**)** **i06068145**

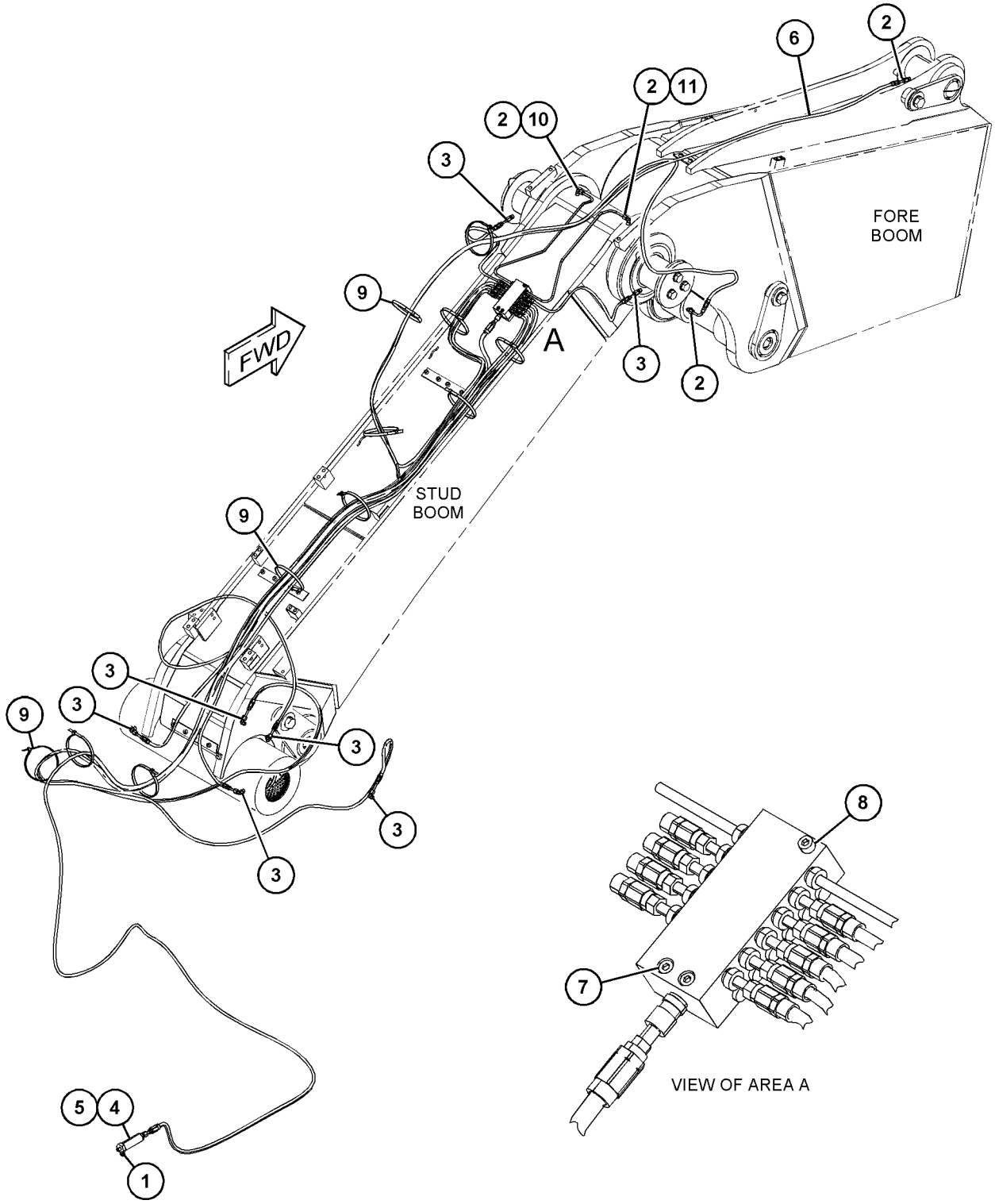

GRAPHIC #1 <END> g06015371

455-4592 LINES GP-GREASE—VARIABLE ADJUSTABLE BOOM

S/N: CH91-UP
PART OF 455-4591 LINES GP-GREASE
AN ATTACHMENT

SMCS-7510 **i05971094**

NOTE	REF NO	GRAPHIC REF	PART NUMBER	QTY	PART NAME 1 2 3 4 5 6 (PRODUCT LEVEL)	SEE PAGE
	1	1	**117-7629**	1	TUBE AS	
	2	1	**117-7630**	17	FITTING-ADAPTER	
	3	1	**117-7631**	18	FITTING-COUPLING	
	4	1	**141-2785**	2	FITTING-ADAPTER	
	5	1	**141-2786**	2	FITTING-COUPLING	
Y	6	1	**142-7433**	1	VALVE GP-LUBE DISTRIBUTION (11-INJECTOR)	753
D	7	1	**169-8324**		HOSE (5.25-M)	
D	8	1	**169-8323**		HOSE (2.2-M)	
D	8A	1	**169-8323**		HOSE (2.8-M)	
D	8B	1	**169-8323**		HOSE (4.7-M)	
D	8C	1	**169-8323**		HOSE (0.5-M EACH)	
D	8D	1	**169-8323**		HOSE (1-M)	
D	8E	1	**169-8323**		HOSE (4.8-M)	
D	8F	1	**169-8323**		HOSE (3.6-M)	
D	8G	1	**169-8323**		HOSE (3.7-M)	

D - ORDER BY THE METER
Y - SEPARATE ILLUSTRATION

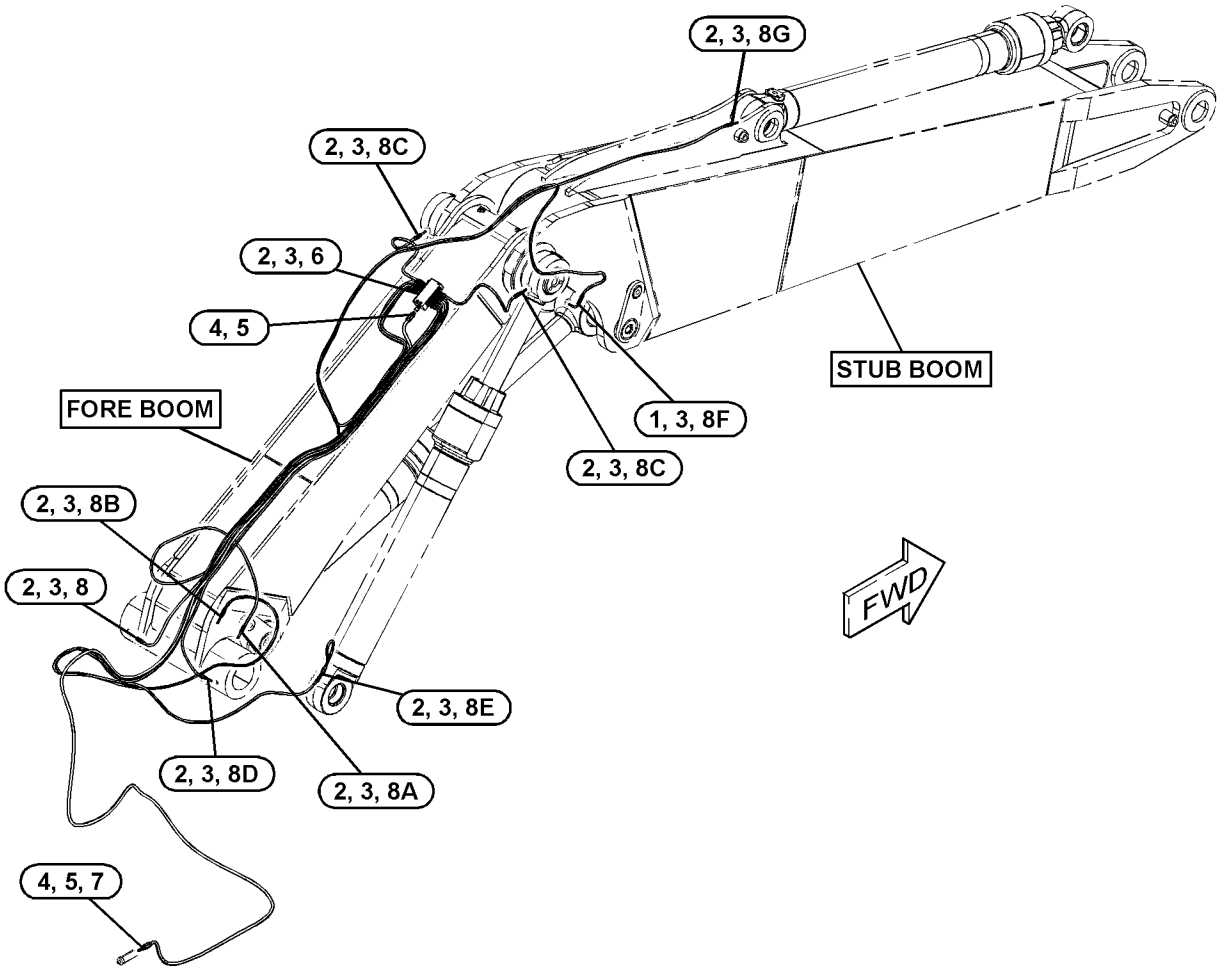

GRAPHIC #1 <END> g03743756

455-9337 LINES GP-GREASE—1-PIECE

S/N: CH91-UP
PART OF 425-9130 BOOM AR
AN ATTACHMENT

SMCS-7510 **i06023371**

NOTE	REF NO	GRAPHIC REF	PART NUMBER	QTY	PART NAME 1 2 3 4 5 6 (PRODUCT LEVEL)	SEE PAGE
	1	1	**5W-2817**	1	FITTING-GREASE	
	2	1	**117-7634**	3	FITTING-STRAIGHT	
	3	1	**117-7635**	4	ELBOW	
	4	1	**141-2778**	1	FITTING-STRAIGHT	
	5	1	**166-0036**	1	FILTER GP-GREASE (BOOM, STICK CYLINDER BEARING)	
		1	**5W-1701**	1	WASHER (22X27X1.5-MM THK)	
		1	**168-3158**	1	FILTER-GREASE (BOOM, STICK CYLINDER BEARING)	
Y	6	1	*455-9338*	1	LINES GP-GREASE	739
M	7	1	**274-8353**	2	BOLT-SOCKET HEAD (M5X0.8X30-MM)	
M	8	1	**295-4155**	1	BOLT-SOCKET HEAD (M5X0.8X35-MM)	
B	9	1	**7K-1181**	13	STRAP-CABLE	

B - USE AS REQUIRED
M - METRIC PART
Y - SEPARATE ILLUSTRATION

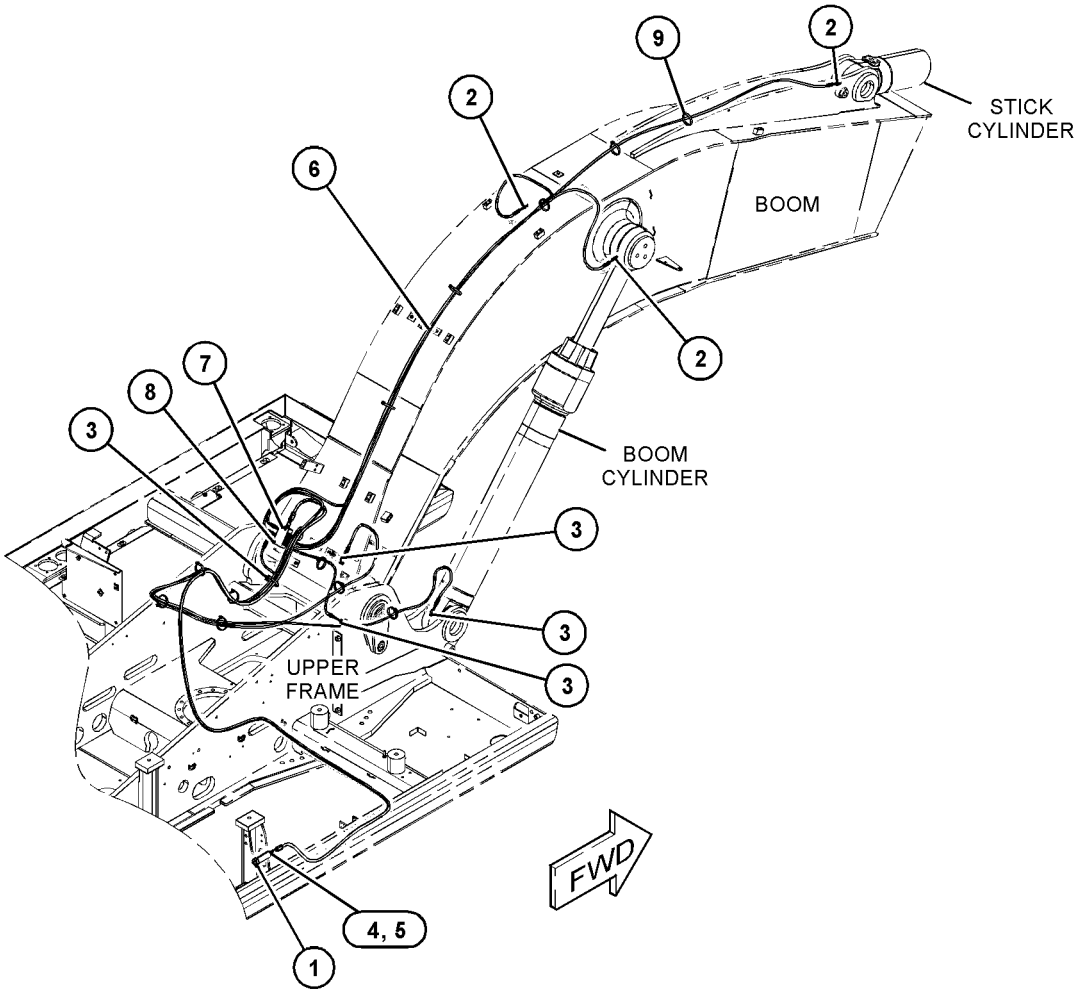

GRAPHIC #1 <END> g03743786

455-9338 LINES GP-GREASE

S/N: CH91-UP

PART OF 455-9337 LINES GP-GREASE

AN ATTACHMENT

SMCS-7510 **i05970817**

NOTE	REF NO	GRAPHIC REF	PART NUMBER	QTY	PART NAME 1 2 3 4 5 6 (PRODUCT LEVEL)	SEE PAGE
	1	1	**117-7629**	3	TUBE AS	
	2	1	**117-7630**	9	FITTING-ADAPTER	
	3	1	**117-7631**	14	FITTING-COUPLING	
	4	1	**141-2785**	2	FITTING-ADAPTER	
	5	1	**141-2786**	2	FITTING-COUPLING	
Y	6	1	**142-7434**	1	VALVE GP-LUBE DISTRIBUTION (7-INJECTOR)	754
	7	1	**274-3833**	2	FITTING	
D	8	1	**169-8323**		HOSE (0.28-M)	
D	8A	1	**169-8323**		HOSE (3.6-M)	
D	8B	1	**169-8323**		HOSE (2.9-M)	
D	8C	1	**169-8323**		HOSE (3.85-M)	
D	8D	1	**169-8323**		HOSE (0.52-M)	
D	8E	1	**169-8323**		HOSE (3.3-M)	
D	8F	1	**169-8323**		HOSE (2.75-M)	
D	9	1	**169-8324**		HOSE (3.9-M)	

D - ORDER BY THE METER
Y - SEPARATE ILLUSTRATION

455-9338 **LINES GP-GREASE (**contd.**)** **i05970817**

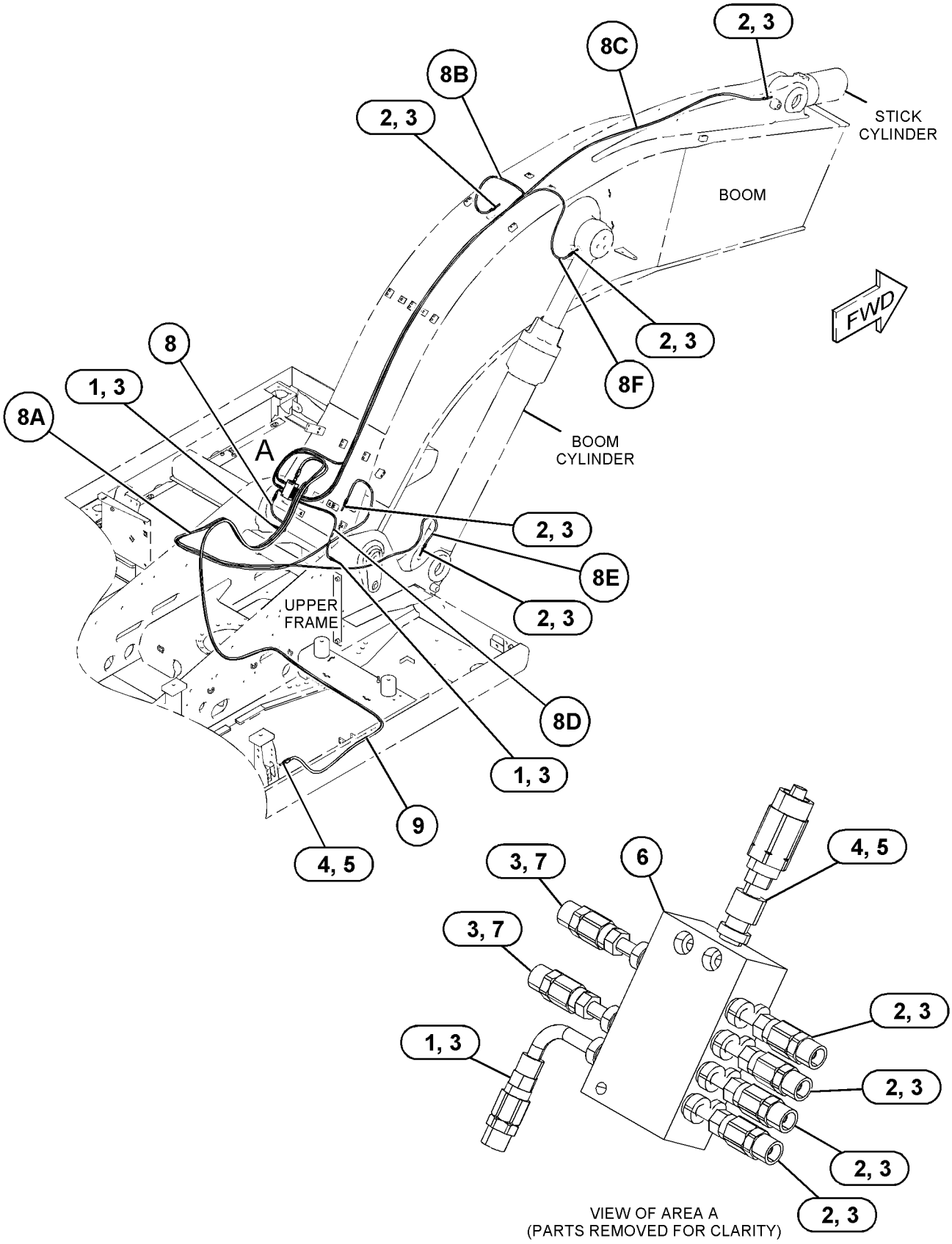

GRAPHIC #1 <END> g03743787

190-0284 LINKAGE GP-BUCKET

S/N: CH91-UP

PART OF 426-0345, 426-2549, 427-9783, 454-8156 STICK AR

AN ATTACHMENT

SMCS-6513 **i05922323**

NOTE	REF NO	GRAPHIC REF	PART NUMBER	QTY	PART NAME 1 2 3 4 5 6 (PRODUCT LEVEL)	SEE PAGE
	1	1	**196-3533**	1	PIN AS	
	2	1	**5W-2817**	4	FITTING-GREASE	
B	3	1	**7Y-2496**	2	SHIM (1.6-MM THK)	
B	4	1	**093-0065**	2	SHIM (1-MM THK)	
B	5	1	**093-0086**	4	SHIM (1-MM THK)	
B	6	1	**093-0097**	1	SHIM (2-MM THK)	
B	7	1	**093-0118**	2	SHIM (2-MM THK)	
	8	1	**093-0349**	3	WASHER (22X60X6-MM THK)	
	9	1	**093-1434**	2	SEAL-LIP TYPE	
B	10	1	**099-7091**	1	SHIM (1.5-MM THK)	
	11	1	**185-6066**	2	PIN AS	
	12	1	**188-6042**	1	LINK AS	
	13	1	**190-9825**	1	LINK & BEARING AS (BUCKET)	
	13A	1	**096-0854**	2	SEAL-LIP TYPE	
	13B	1	**111-7604**	2	BUSHING	
	13C	1	**190-5335**	1	BUSHING	
	14	1	**367-8467**	2	SEAL-O-RING	
	16	1	**367-8466**	2	SEAL-O-RING	
	17	1	**8T-4123**	3	WASHER (22X35X3.5-MM THK)	
M	18	1	**8T-4780**	3	BOLT (M20X2.5X30-MM)	

B - USE AS REQUIRED
M - METRIC PART

190-0284 **LINKAGE GP-BUCKET** (contd.) **i05922323**

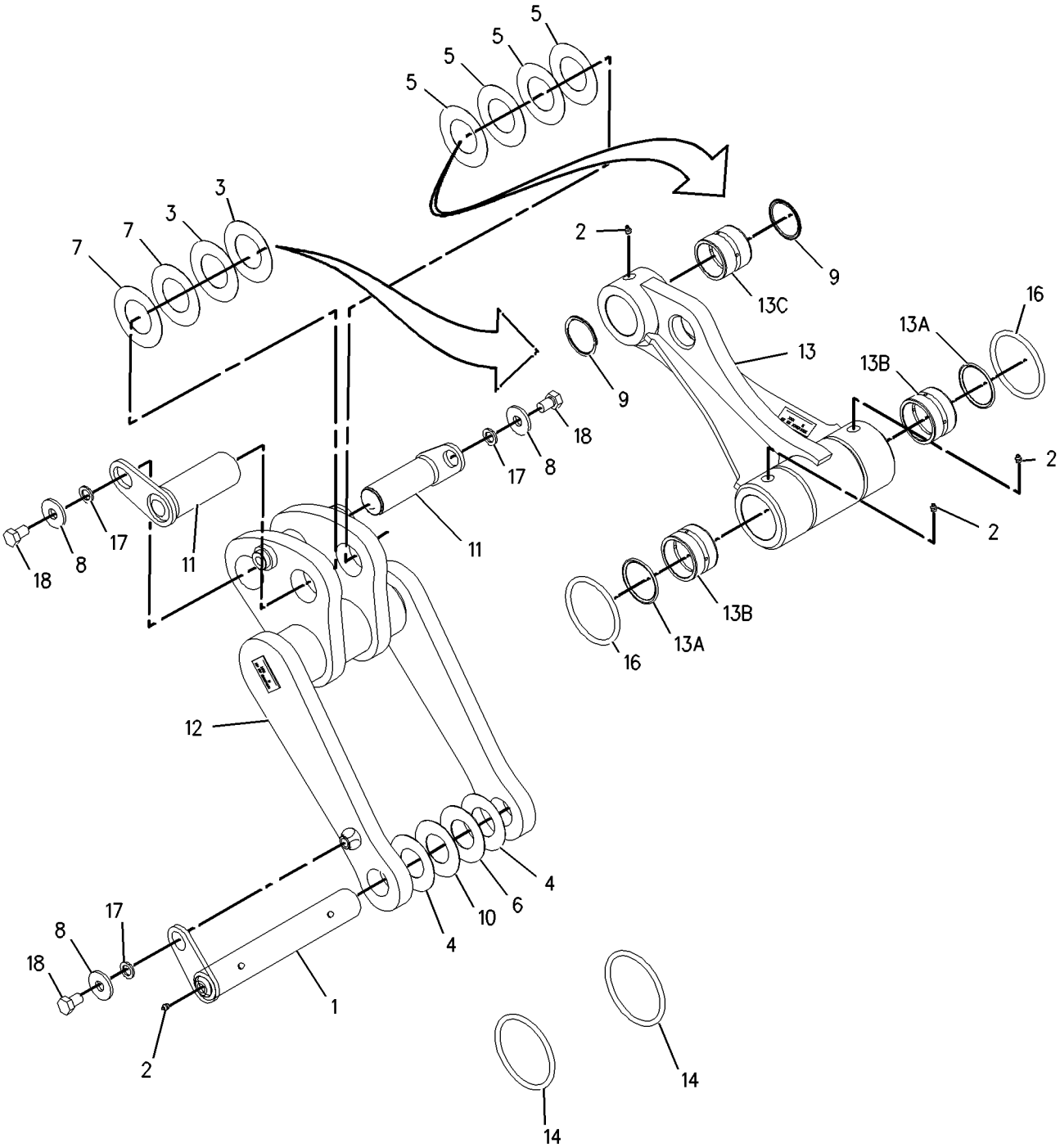

GRAPHIC #1 <END> g00822972

177-8628 PIN GP–COUPLER

S/N: CH91-UP
PART OF 455-3909 COUPLER AR-QUICK
AN ATTACHMENT

SMCS-6108, 6501, 6502 **i06931096**

NOTE	REF NO	GRAPHIC REF	PART NUMBER	QTY	PART NAME 1 2 3 4 5 6 (PRODUCT LEVEL)	SEE PAGE
	1	1	**087-5805**	2	PIN	
M	2	1	**451-2183**	4	NUT (M16X2-THD)	
M	3	1	**236-6366**	2	BOLT (M16X2X195-MM)	

M - METRIC PART

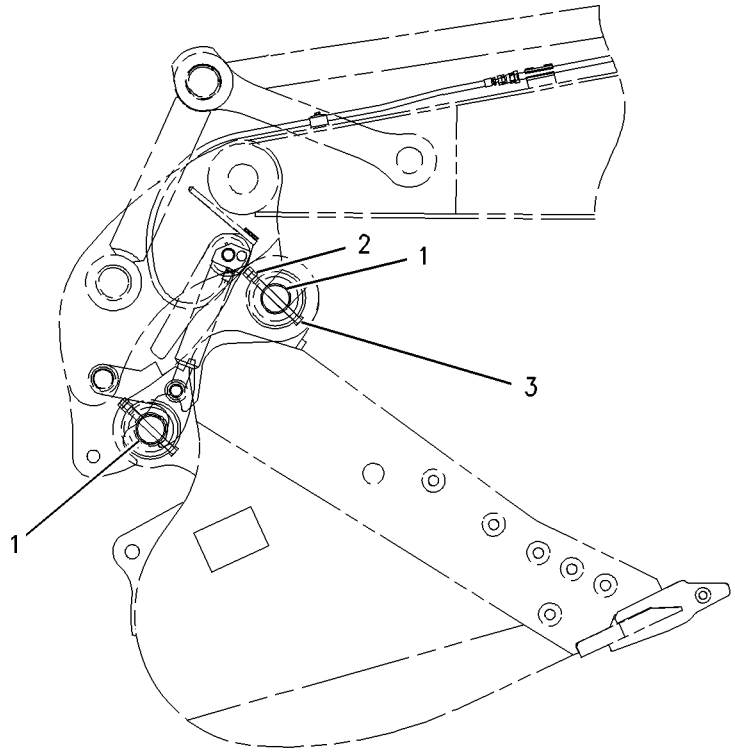

LEFT SIDE VIEW

GRAPHIC #1 <END> g00808848

123-4801 PIN GP-EXCAVATOR

S/N: CH91-UP
FOR USE WITH ADJUSTER RETENTION BUCKETS
PART OF 453-8185, 473-2841, 517-3262 DISTRIBUTION AR
AN ATTACHMENT

SMCS-6108, 6501, 6502 **i06017453**

NOTE	REF NO	GRAPHIC REF	PART NUMBER	QTY	PART NAME 1 2 3 4 5 6 (PRODUCT LEVEL)	SEE PAGE
	1	1	**087-5805**	2	PIN	
M	2	1	**7Y-5227**	2	BOLT (M16X2X190-MM)	
M	3	1	**8T-4132**	4	NUT (M16X2-THD)	

M - METRIC PART

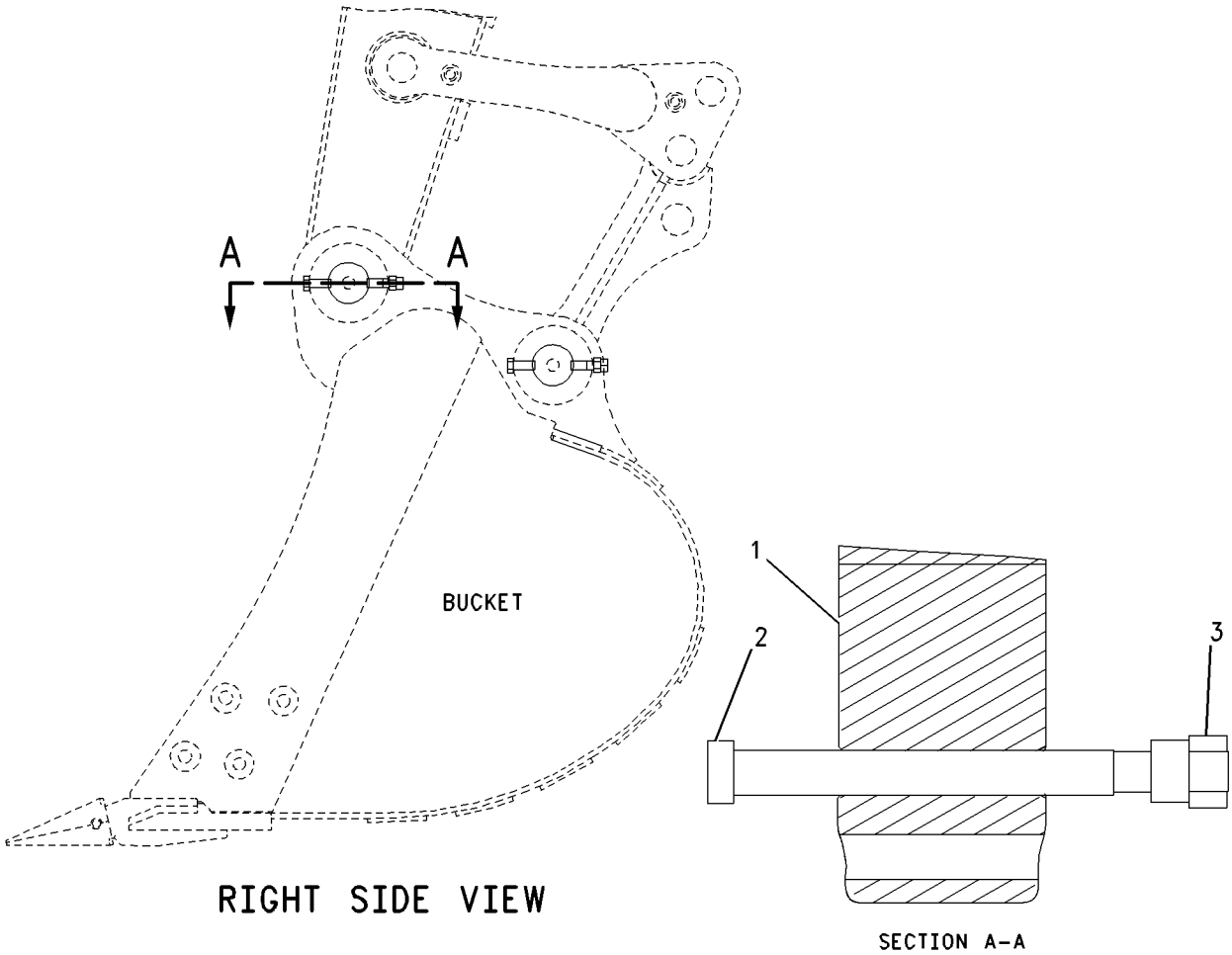

GRAPHIC #1 <END> g00929932

257-0384 STABILIZER GP

S/N: CH91-UP

PART OF 354-7130, 455-4597 STABILIZER AR

AN ATTACHMENT

SMCS-7222 **i05923549**

NOTE	REF NO	GRAPHIC REF	PART NUMBER	QTY	PART NAME 1 2 3 4 5 6 (PRODUCT LEVEL)	SEE PAGE
	1	1	**5W-2817**	10	FITTING-GREASE	
	2	1	**093-0349**	4	WASHER (22X60X6-MM THK)	
	3	1	**111-3999**	2	PIN AS	
	4	1	**111-4063**	2	PIN AS	
	6	1	**122-7252**	26	PLATE-SPRING	
	7	1	**196-4760**	2	PAD AS	
	8	1	**197-9990**	2	PIN AS	
	9	1	*367-0617*	2	ARM & BEARING AS	
					(EACH INCLUDES)	
		1	**117-9896**	2	SLEEVE	
		1	**258-6336**	1	ARM AS	
	10	1	**258-6358**	2	PIN AS	
	11	1	**258-6360**	2	TUBE	
	12	1	**313-9304**	2	COVER AS	
	13	1	**258-6391**	2	PIN AS	
	14	1	**258-6392**	2	PIN AS	
	15	1	**258-6396**	1	PIN (LH)	
	16	1	**258-7554**	1	PIN (RH)	
	17	1	**128-8389**	2	PLATE	
	18	1	**170-5707**	2	LOCKPIN	
M	19	1	**8T-4200**	4	BOLT (M8X1.25X16-MM)	
	20	1	**8T-4123**	4	WASHER (22X35X3.5-MM THK)	
	21	1	**302-7746**	2	PLATE	
M	22	1	**8T-4139**	4	BOLT (M12X1.75X30-MM)	
M	23	1	**8T-4174**	2	BOLT (M16X2X120-MM)	
	24	1	**8T-4223**	4	WASHER-HARD (13.5X25.5X3-MM THK)	
	25	1	**8T-4224**	4	WASHER-HARD (8.8X16X2-MM THK)	
M	27	1	**8T-4780**	4	BOLT (M20X2.5X30-MM)	
M	28	1	**8T-5460**	2	BOLT (M20X2.5X40-MM)	

M - METRIC PART

257-0384 **STABILIZER GP (**contd.**)** **i05923549**

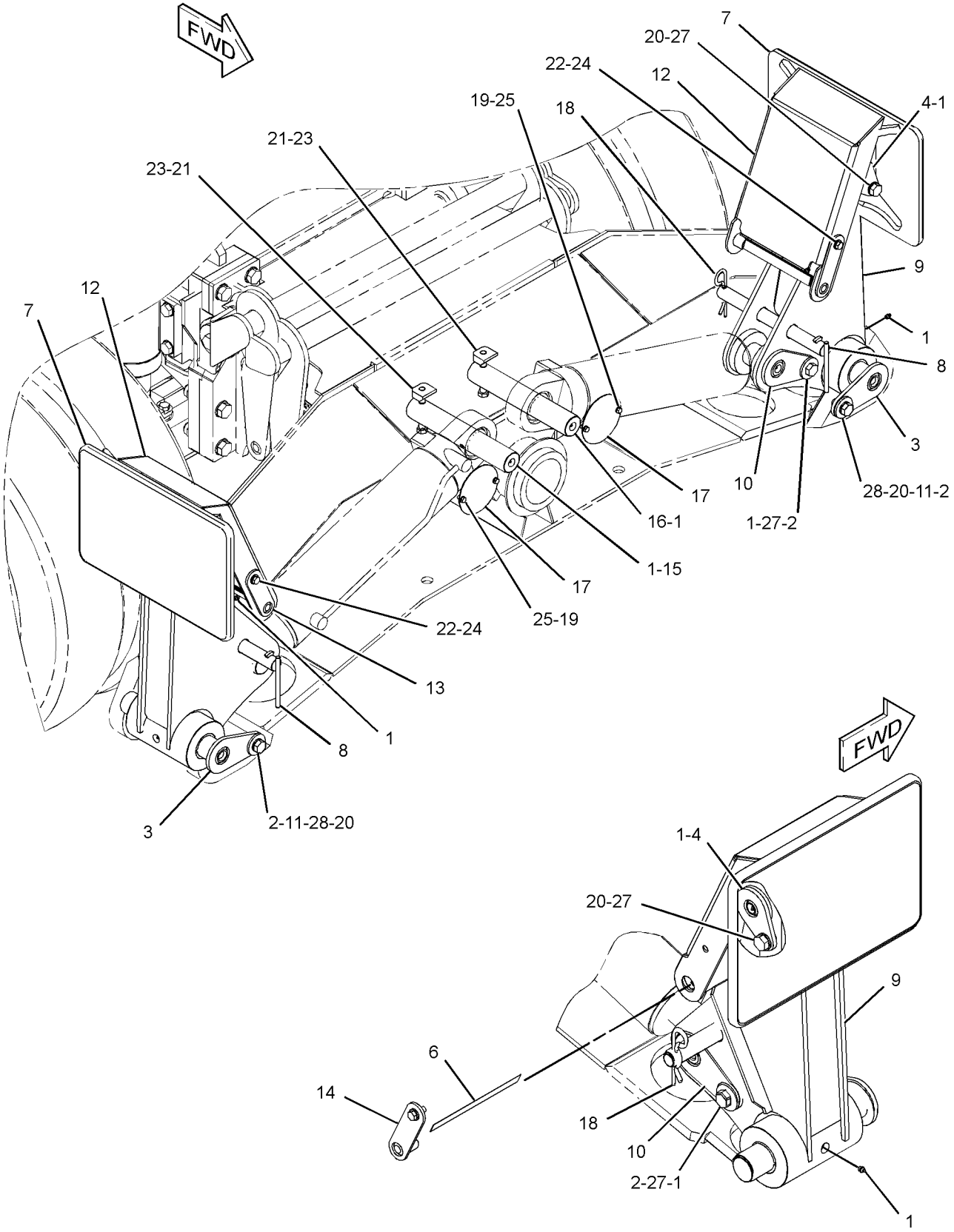

GRAPHIC #1 <END> g02306835

426-0345 STICK AR

S/N: CH91-UP

AN ATTACHMENT

SMCS-6502 **i07694844**

NOTE	PART NUMBER	QTY	PART NAME 1 2 3 4 5 6 (PRODUCT LEVEL)	SEE PAGE
Y	*368-3224*	1	CYLINDER & SEAL GP-BUCKET	348
			—OR—	
Y	*533-9620*	1	CYLINDER & SEAL GP-BUCKET	349
Y	*417-8475*	1	LINES GP-STICK (DIVERTER VALVE)	557
			—OR—	
Y	*539-2810*	1	LINES GP-STICK (DIVERTER VALVE)	576
Y	*190-0284*	1	LINKAGE GP-BUCKET	741
Y	*253-3920*	1	STICK GP-HOE (LONG)	751

Y - SEPARATE ILLUSTRATION

<END>

426-2549 STICK AR

S/N: CH91-UP

AN ATTACHMENT

SMCS-6502 **i07307855**

NOTE	PART NUMBER	QTY	PART NAME 1 2 3 4 5 6 (PRODUCT LEVEL)	SEE PAGE
Y	*368-3224*	1	CYLINDER & SEAL GP-BUCKET	348
			—OR—	
Y	*533-9620*	1	CYLINDER & SEAL GP-BUCKET	349
Y	*417-8472*	1	LINES GP-STICK (DIVERTER VALVE)	555
			—OR—	
Y	*539-2809*	1	LINES GP-STICK (DIVERTER VALVE)	574
Y	*190-0284*	1	LINKAGE GP-BUCKET	741
Y	*253-3919*	1	STICK GP-HOE (MEDIUM)	749

Y - SEPARATE ILLUSTRATION

<END>

427-9783 STICK AR

S/N: CH91-UP

AN ATTACHMENT

SMCS-6502 **i07307854**

NOTE	PART NUMBER	QTY	PART NAME 1 2 3 4 5 6 (PRODUCT LEVEL)	SEE PAGE
Y	*368-3224*	1	CYLINDER & SEAL GP-BUCKET	348
			—OR—	
Y	**533-9620**	1	CYLINDER & SEAL GP-BUCKET	349
Y	*254-0394*	1	LINES GP-STICK (BUCKET CYLINDER)	549
			—OR—	
Y	*529-8079*	1	LINES GP-STICK (BUCKET CYLINDER)	571
Y	*190-0284*	1	LINKAGE GP-BUCKET	741
Y	*253-3919*	1	STICK GP-HOE (MEDIUM)	749

Y - SEPARATE ILLUSTRATION

<END>

454-8156 STICK AR

S/N: CH91-UP

PART OF 453-8185, 473-2841, 517-3262 DISTRIBUTION AR

AN ATTACHMENT

SMCS-6502 **i07307857**

NOTE	PART NUMBER	QTY	PART NAME 1 2 3 4 5 6 (PRODUCT LEVEL)	SEE PAGE
Y	*254-0395*	1	LINES GP-STICK (BUCKET CYLINDER)	550
			—OR—	
Y	*529-8080*	1	LINES GP-STICK (BUCKET CYLINDER)	573
Y	*368-3224*	1	CYLINDER & SEAL GP-BUCKET	348
			—OR—	
Y	**533-9620**	1	CYLINDER & SEAL GP-BUCKET	349
Y	*190-0284*	1	LINKAGE GP-BUCKET	741
Y	*253-3920*	1	STICK GP-HOE (LONG)	751

Y - SEPARATE ILLUSTRATION

<END>

253-3919 STICK GP-HOE

S/N: CH91-UP
2.5-M (8.2-FT)
PART OF 426-2549, 427-9783 STICK AR
AN ATTACHMENT

SMCS-6502 **i05922436**

NOTE	REF NO	GRAPHIC REF	PART NUMBER	QTY	PART NAME 1 2 3 4 5 6 (PRODUCT LEVEL)	SEE PAGE
	1	1	**5W-2817**	4	FITTING-GREASE	
B	2	1	**7Y-2496**	1	SHIM (1.6-MM THK)	
B	3	1	**7Y-2498**	1	SHIM (1.6-MM THK)	
B	4	1	**093-0083**	1	SHIM (1-MM THK)	
B	5	1	**093-0086**	1	SHIM (1-MM THK)	
B	6	1	**093-0115**	1	SHIM (2-MM THK)	
B	7	1	**093-0118**	1	SHIM (2-MM THK)	
	8	1	**093-0349**	2	WASHER (22X60X6-MM THK)	
	9	1	**093-1433**	2	SEAL-LIP TYPE	
	10	1	**188-3917**	1	PIN AS	
	11	1	**202-3165**	1	PIN AS	
	12	1	**254-7614**	1	STICK & BEARING AS	
		1	**096-0854**	2	SEAL-LIP TYPE	
	12A	1	**111-7604**	2	BUSHING	
	12B	1	**111-7605**	2	BUSHING	
	12C	1	**194-5039**	2	BUSHING	
	13	1	**096-0854**	2	SEAL-LIP TYPE	
B	14	1	**133-2424**	1	SHIM (0.5-MM THK)	
B	15	1	**133-2425**	1	SHIM (0.5-MM THK)	
	16	1	**7X-4803**	2	SEAL-LIP TYPE	
	17	1	**8T-4123**	2	WASHER (22X35X3.5-MM THK)	
M	18	1	**8T-4780**	2	BOLT (M20X2.5X30-MM)	

B - USE AS REQUIRED
M - METRIC PART

253-3919 **STICK GP-HOE (**contd.**)** **i05922436**

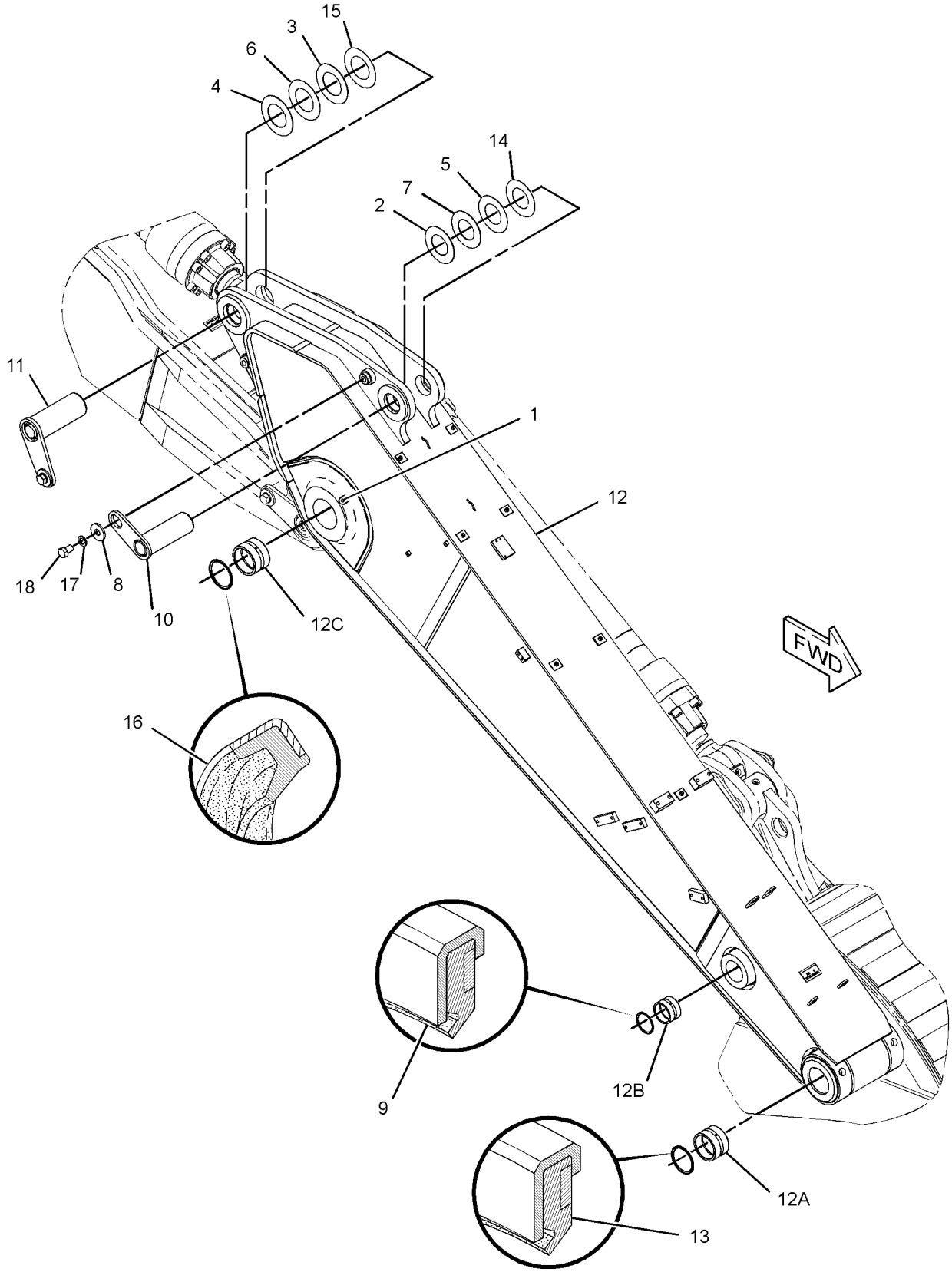

GRAPHIC #1 <END> g01324268

253-3920 STICK GP-HOE

S/N: CH91-UP
2.8-M (9.2-FT)
PART OF 426-0345, 454-8156 STICK AR
AN ATTACHMENT

SMCS-6502 **i05922326**

NOTE	REF NO	GRAPHIC REF	PART NUMBER	QTY	PART NAME 1 2 3 4 5 6 (PRODUCT LEVEL)	SEE PAGE
	1	1	**5W-2817**	4	FITTING-GREASE	
B	2	1	**7Y-2496**	1	SHIM (1.6-MM THK)	
B	3	1	**7Y-2498**	1	SHIM (1.6-MM THK)	
B	4	1	**093-0083**	1	SHIM (1-MM THK)	
B	5	1	**093-0086**	1	SHIM (1-MM THK)	
B	6	1	**093-0115**	1	SHIM (2-MM THK)	
B	7	1	**093-0118**	1	SHIM (2-MM THK)	
	8	1	**093-0349**	2	WASHER (22X60X6-MM THK)	
	9	1	**093-1433**	2	SEAL-LIP TYPE	
	10	1	**188-3917**	1	PIN AS	
	11	1	**202-3165**	1	PIN AS	
	12	1	**254-7615**	1	STICK & BEARING AS	
	12A	1	**111-7605**	2	BUSHING	
	12B	1	**194-5039**	2	BUSHING	
	12C	1	**111-7604**	2	BUSHING	
	12D	1	**096-0854**	2	SEAL-LIP TYPE	
B	14	1	**133-2424**	1	SHIM (0.5-MM THK)	
B	15	1	**133-2425**	1	SHIM (0.5-MM THK)	
	16	1	**7X-4803**	2	SEAL-LIP TYPE	
	17	1	**8T-4123**	2	WASHER (22X35X3.5-MM THK)	
M	18	1	**8T-4780**	2	BOLT (M20X2.5X30-MM)	

B - USE AS REQUIRED
M - METRIC PART

253-3920 **STICK GP-HOE (**contd.**)** **i05922326**

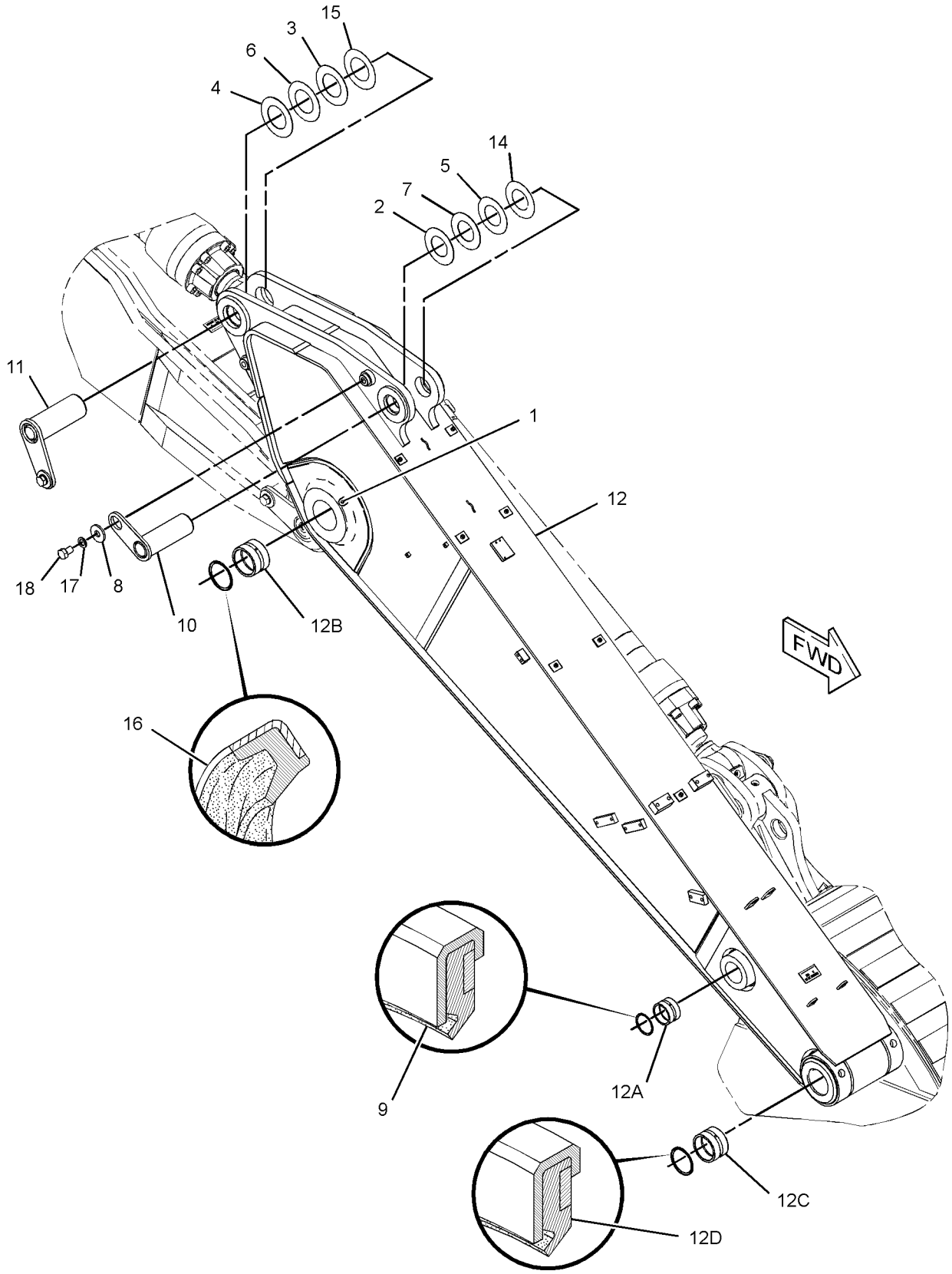

GRAPHIC #1 <END> g03275976

142-7433 VALVE GP-LUBE DISTRIBUTION–11-INJECTOR

S/N: CH91-UP

PART OF 455-4592 LINES GP-GREASE

AN ATTACHMENT

SMCS-7540 **i05517790**

NOTE	REF NO	GRAPHIC REF	PART NUMBER	QTY	PART NAME 1 2 3 4 5 6 (PRODUCT LEVEL)	SEE PAGE
	1	1	**141-2778**	1	FITTING-STRAIGHT	
	2	1	**135-2442**	11	FITTING	
	3	1	**135-2443**	11	RING	
M	4	1	**135-2444**	1	BOLT (M10X1X5.5-MM) (M10X1X12MM)	

M - METRIC PART

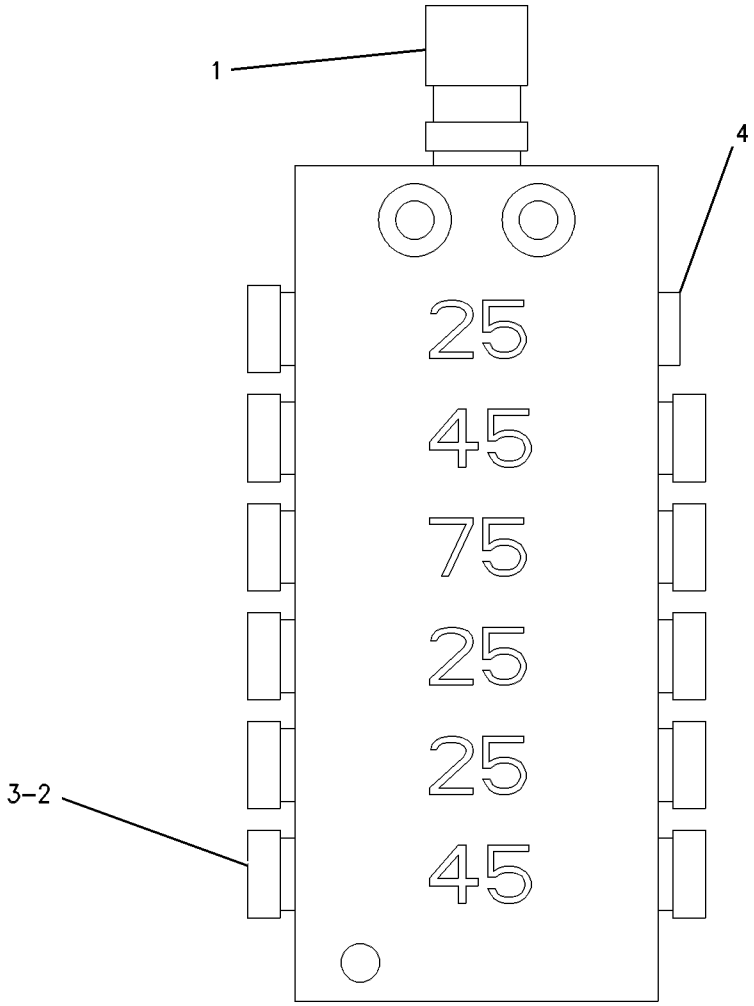

GRAPHIC #1 <END> g00278667

142-7434 VALVE GP-LUBE DISTRIBUTION–7-INJECTOR

S/N: CH91-UP
PART OF 455-9338 LINES GP-GREASE
AN ATTACHMENT

SMCS-7540 **i05517851**

NOTE	REF NO	GRAPHIC REF	PART NUMBER	QTY	PART NAME 1 2 3 4 5 6 (PRODUCT LEVEL)	SEE PAGE
	1	1	**141-2778**	1	FITTING-STRAIGHT	
	2	1	**135-2442**	7	FITTING	
	3	1	**135-2443**	7	RING	
M	4	1	**135-2444**	1	BOLT (M10X1X5.5-MM)	

M - METRIC PART

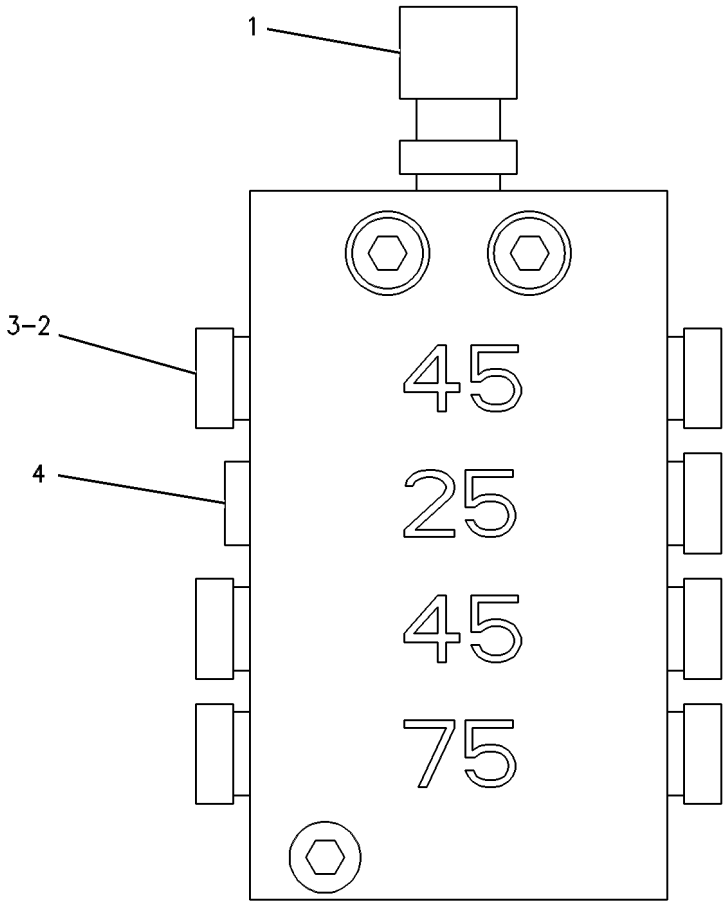

GRAPHIC #1 <END> g00277719

7Y-2219 ADJUSTER GP-BUCKET

S/N: CH91-UP
B-FAMILY
PART OF 388-9586, 388-9591, 389-0254, 466-8424 BUCKET & ADJUSTER GP
AN ATTACHMENT

SMCS-6513, 6700 **i04707438**

NOTE	REF NO	GRAPHIC REF	PART NUMBER	QTY	PART NAME 1 2 3 4 5 6 (PRODUCT LEVEL)	SEE PAGE
B	1	1	**086-0322**	6	SHIM (1-MM THK)	
B	2	1	**086-0321**	4	SHIM (0.5-MM THK)	
	3	1	**193-5014**	1	PIN	
	4	1	**134-8948**	1	PLATE	
M	5	1	**8T-4193**	4	BOLT (M16X2X50-MM)	
	6	1	**9X-8257**	4	WASHER (17.5X30X3.5-MM THK)	
	7	1	**193-5015**	1	FLANGE	

B - USE AS REQUIRED
M - METRIC PART

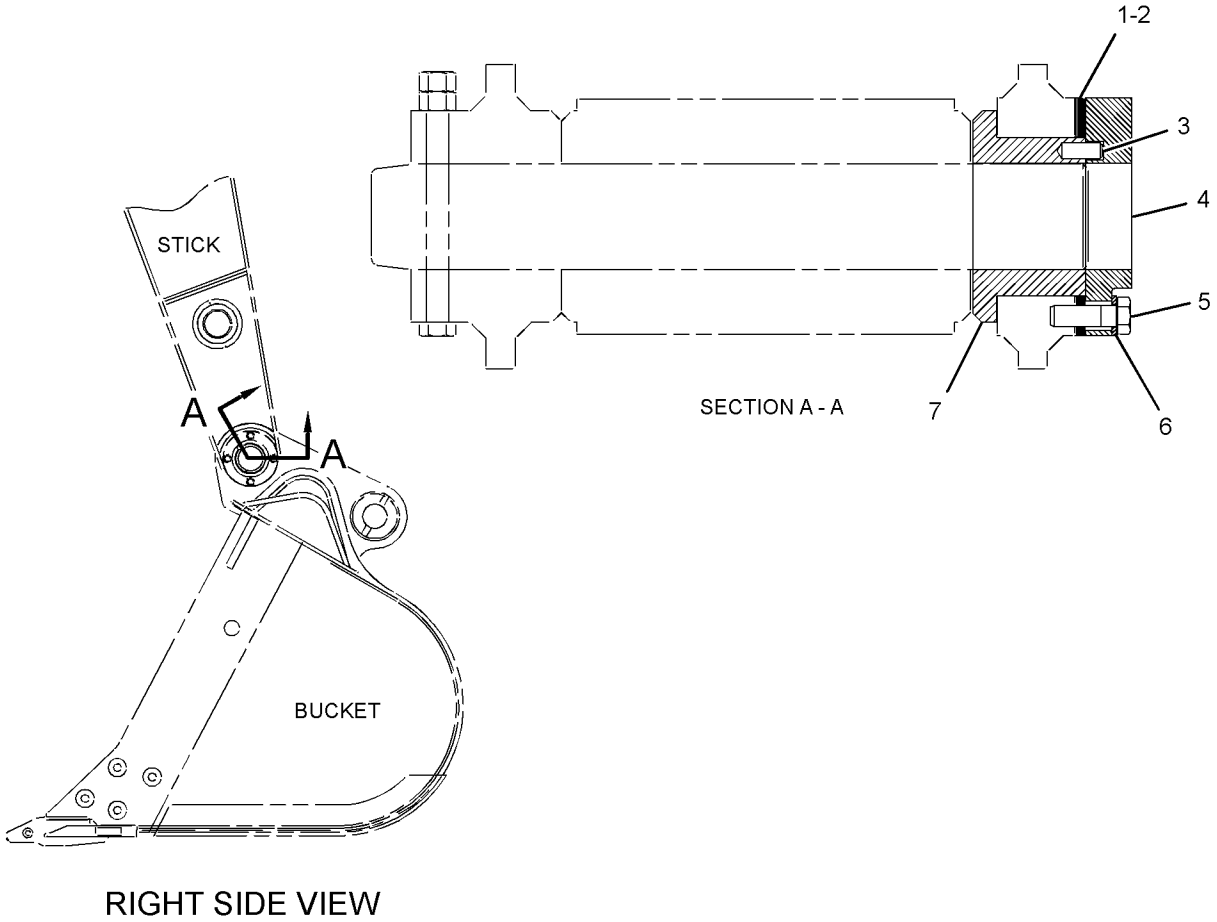

RIGHT SIDE VIEW

GRAPHIC #1 <END> g02812617

448-8649 BLADE & MOUNTING GP

S/N: CH91-UP

PART OF 453-7132, 454-8880 BLADE AR

AN ATTACHMENT

SMCS-6060 **i05925998**

NOTE	REF NO	GRAPHIC REF	PART NUMBER	QTY	PART NAME 1 2 3 4 5 6 (PRODUCT LEVEL)	SEE PAGE
B	1	1	**093-0065**	16	SHIM (1-MM THK)	
	2	1	**093-0349**	12	WASHER (22X60X6-MM THK)	
B	3	1	**133-2717**	24	SHIM (0.5-MM THK)	
	4	1	**356-9586**	1	LINK AS	
	5	1	**356-9596**	1	LINK AS	
					(EACH LINK AS INCLUDES)	
		1	**127-9580**	3	ROD	
	6	1	**358-2920**	8	PIN AS	
Y	7	1	**358-8779**	2	CYLINDER GP-HYDRAULIC	362
	8	1	**360-9510**	4	PIN AS	
	9	1	*419-1551*	1	BLADE GP	
		1	**419-1550**	1	BLADE AS	
		1	**117-9896**	4	SLEEVE	
	10	1	**448-8494**	1	BRACKET AS	
	11	1	**8T-4123**	12	WASHER (22X35X3.5-MM THK)	
M	12	1	**8T-4780**	12	BOLT (M20X2.5X30-MM)	

B - USE AS REQUIRED
M - METRIC PART
Y - SEPARATE ILLUSTRATION

448-8649 **BLADE & MOUNTING GP** (contd.) **i05925998**

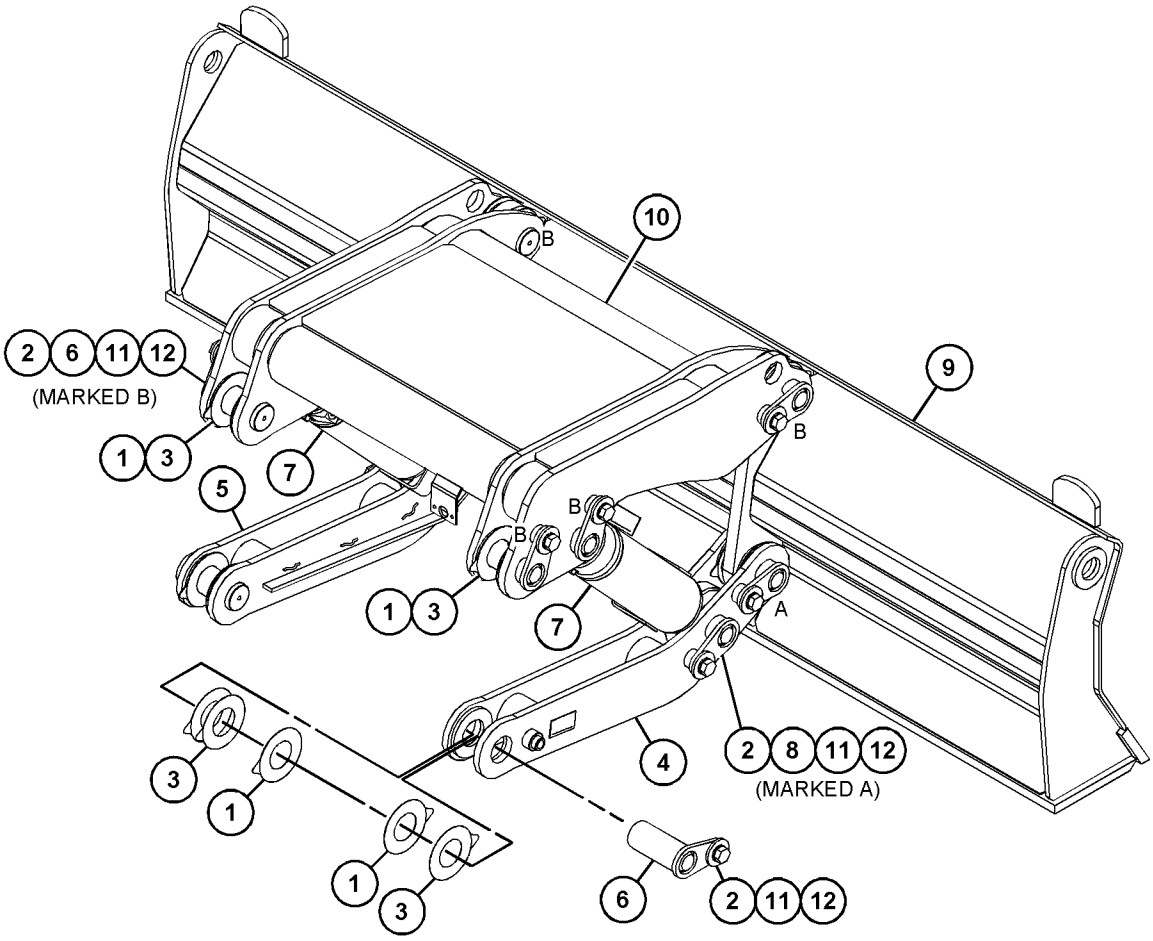

GRAPHIC #1 <END> g03691200

453-7132 BLADE AR

S/N: CH91-UP
PART OF 426-2551 UNDERCARRIAGE AR
AN ATTACHMENT

SMCS-6060 **i05925981**

NOTE	PART NUMBER	QTY	PART NAME 1 2 3 4 5 6 (PRODUCT LEVEL)	SEE PAGE
Y	*448-8649*	1	BLADE & MOUNTING GP	756
Y	*450-8372*	1	LINES GP-GREASE (FRONT AXLE PIVOT)	781
Y	*455-4595*	1	LINES GP-GREASE (BLADE)	782

Y - SEPARATE ILLUSTRATION

<END>

454-8880 BLADE AR

S/N: CH91-UP
PART OF 426-2550 UNDERCARRIAGE AR
AN ATTACHMENT

SMCS-6060 **i05926074**

NOTE	PART NUMBER	QTY	PART NAME 1 2 3 4 5 6 (PRODUCT LEVEL)	SEE PAGE
Y	*455-4595*	1	LINES GP-GREASE (BLADE)	782
Y	*448-8649*	1	BLADE & MOUNTING GP	756

Y - SEPARATE ILLUSTRATION

<END>

434-6242 BLADE GP

S/N: CH91-UP
PART OF 433-1658 WIPER GP-WINDOW
ALSO AN ATTACHMENT

SMCS-6060 **i05736271**

NOTE	REF NO	GRAPHIC REF	PART NUMBER	QTY	PART NAME 1 2 3 4 5 6 (PRODUCT LEVEL)	SEE PAGE
	1	1	**353-2017**	1	FITTING	
	2	1	**353-2018**	1	PLATE	
	3	1	**235-5763**	1	NOZZLE	
	4	1	**248-7990**	1	BLADE AS-WIPER (900-MM)	
	5	1	**435-4340**	1	BLADE GP	
	6	1	**302-1835**	2	SPRING	
	7	1	**305-9192**	1	NOZZLE AS-WASHER	

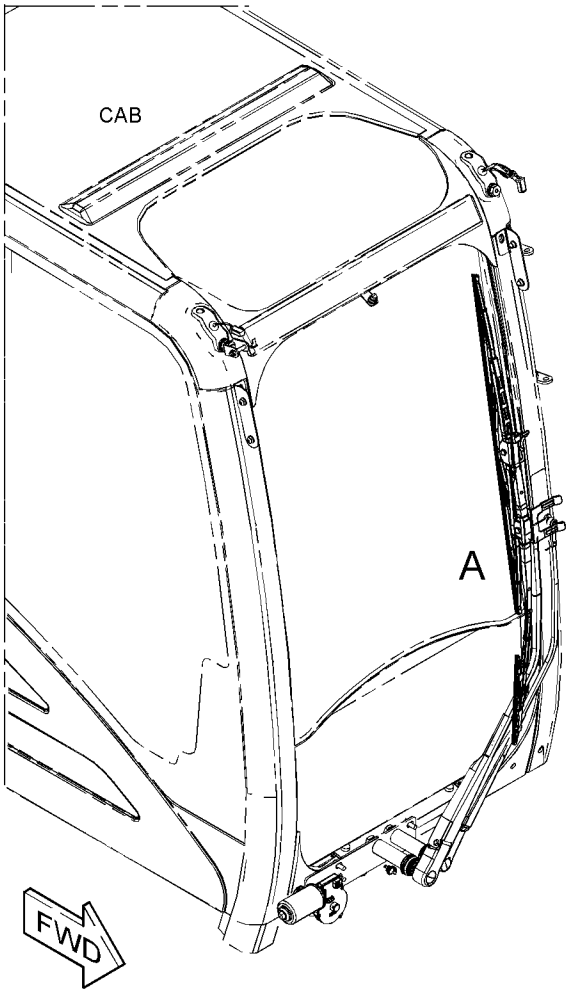

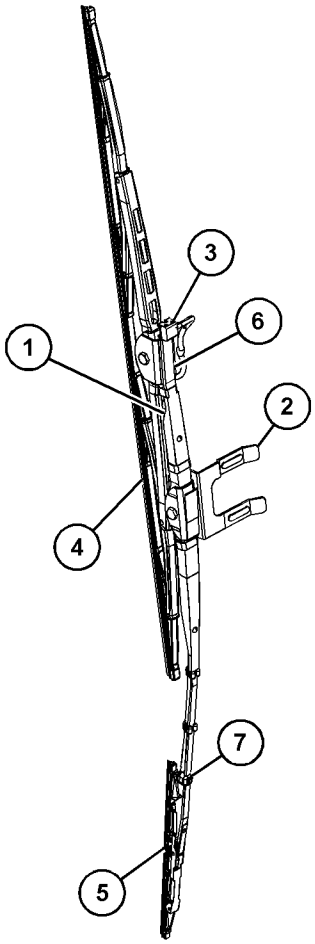

VIEW OF AREA A

GRAPHIC #1 <END> g03520019

337-5775 BRACKET GP-MOUNTING—REAR VIEW, CAMERA

S/N: CH91-UP
PART OF 337-5816 WIRING GP-CAMERA
ALSO AN ATTACHMENT

SMCS-6700 **i05496556**

NOTE	REF NO	GRAPHIC REF	PART NUMBER	QTY	PART NAME 1 2 3 4 5 6 (PRODUCT LEVEL)	SEE PAGE
	1	1	**278-5278**	1	BRACKET	
	2	1	**287-0309**	1	BRACKET	
J	3	1	**336-6684**	1	CAMERA GP (WORK AREA VISUAL SYSTEM, REAR)	
	4	1	**1H-3244**	2	LOCKWASHER	
M	5	1	**9X-2042**	2	SCREW-TRUSS HEAD (M6X1X12-MM)	
M	6	1	**9X-2045**	2	SCREW-TRUSS HEAD (M6X1X20-MM)	
					AVAILABLE REPAIR KIT(S):	
J			**251-4162**	1	KIT-BRACKET (CAMERA)	
					(INCLUDES BRACKET, BOLTS, LOCK NUTS, GASKET & ALLEN WRENCH)	

J - KIT MARKED J SERVICES PART(S) MARKED J
M - METRIC PART

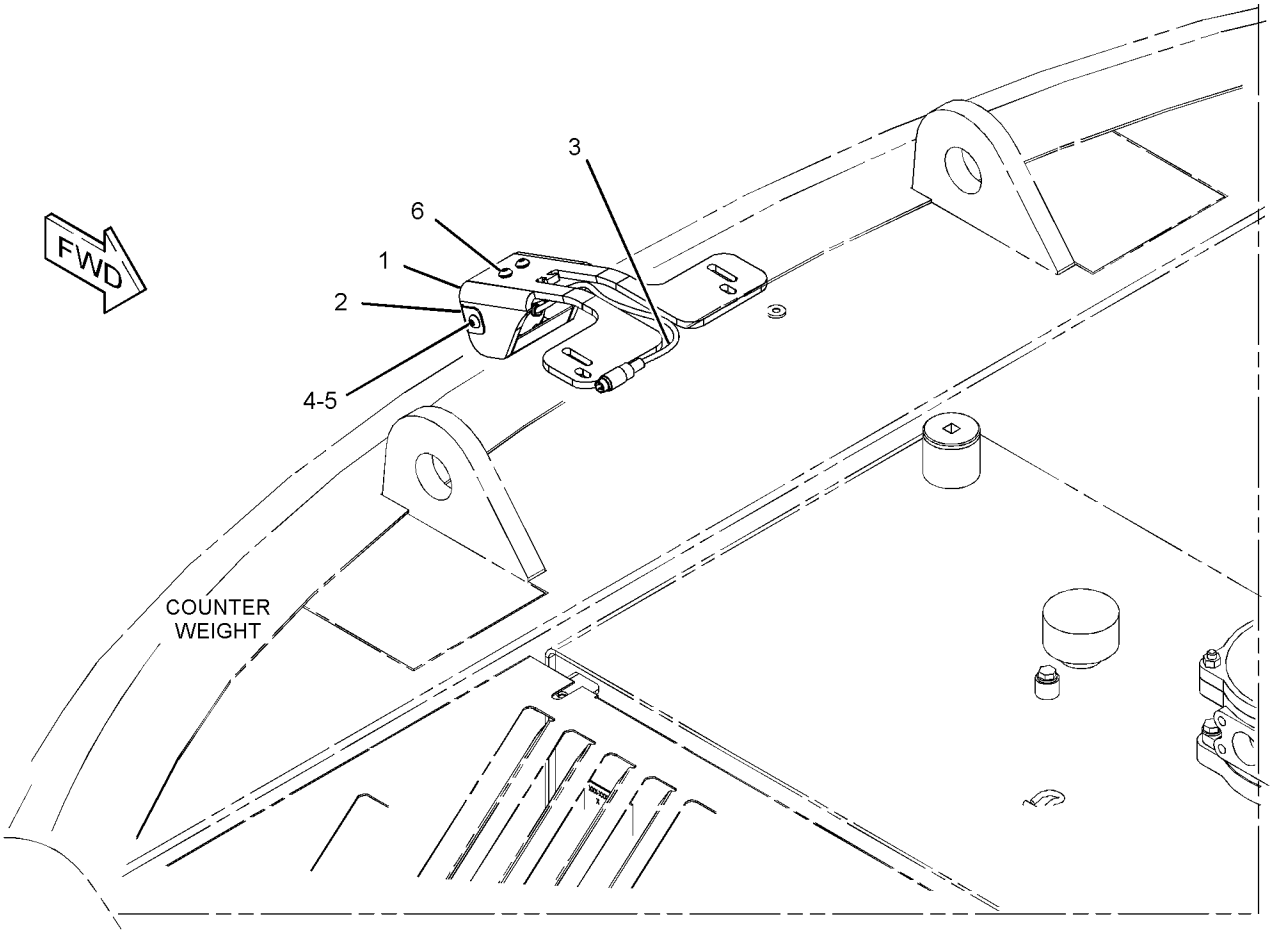

GRAPHIC #1 <END> g02417636

388-9586 BUCKET & ADJUSTER GP—GENERAL PURPOSE

S/N: CH91-UP

600-MM (24-IN) WIDE X 0.4-CU M (0.5 CU YD) CAPACITY. K-80 ADAPTERS, QTY OF 3

AN ATTACHMENT

SMCS-6503, 6513 **i05916049**

NOTE	REF NO	GRAPHIC REF	PART NUMBER	QTY	PART NAME 1 2 3 4 5 6 (PRODUCT LEVEL)	SEE PAGE
	1	1	**2C-9259**	1	PLATE-IDENTIFICATION (CAT)	
Y	2	1	**7Y-2219**	1	ADJUSTER GP-BUCKET (B-FAMILY)	755
	3	1	**137-4234**	1	PLATE-IDENTIFICATION (WORK TOOL)	
Y	4	1	*388-9592*	1	BUCKET AS-GENERAL PURPOSE	766
	5	1	**312-5694**	1	SETSCREW (1/4-20X0.25-IN)	

Y - SEPARATE ILLUSTRATION

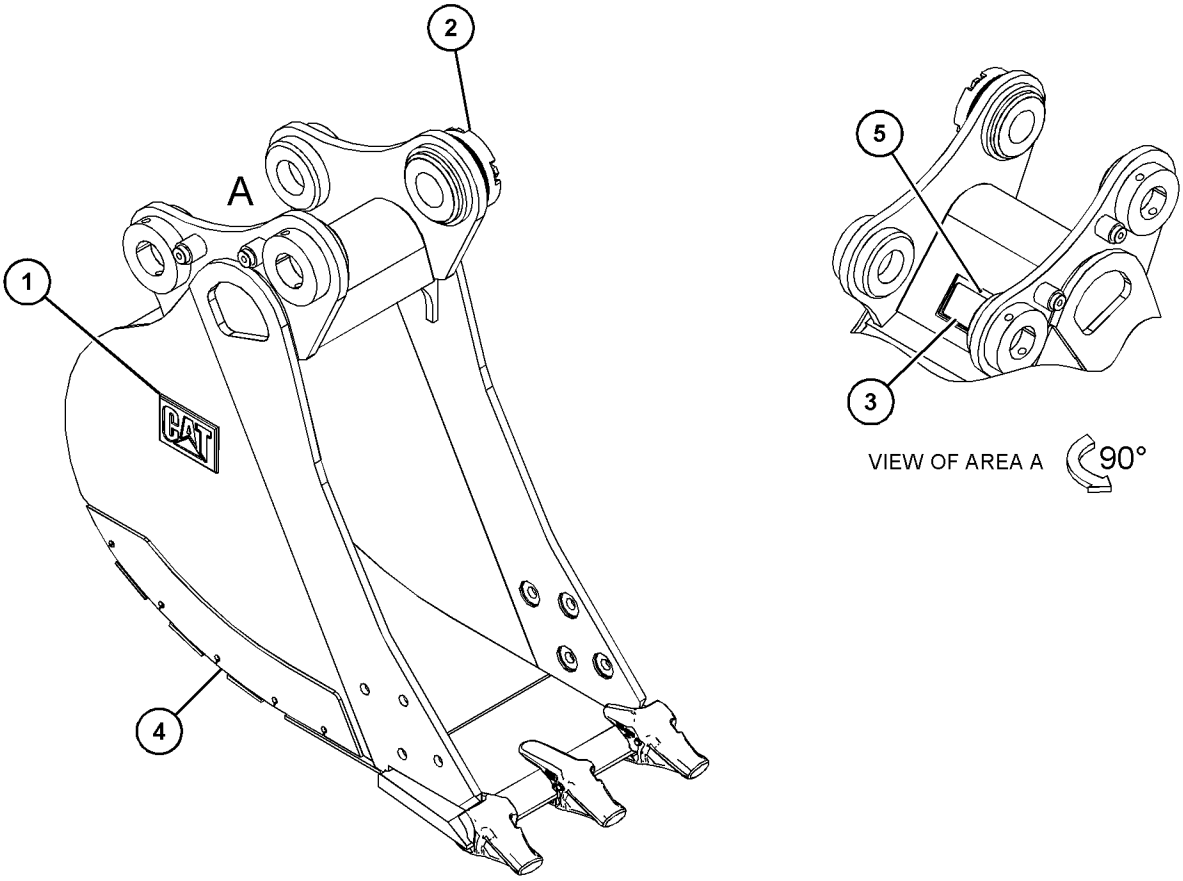

GRAPHIC #1 <END> g03577836

388-9591 BUCKET & ADJUSTER GP—GENERAL PURPOSE, B-FAMILY

S/N: CH91-UP

1400-MM (55-IN) WIDE X 1.2-CU M (1.6-CU YD) CAPACITY. K-80 ADAPTERS, QTY OF 5

AN ATTACHMENT

SMCS-6503, 6513 **i05916051**

NOTE	REF NO	GRAPHIC REF	PART NUMBER	QTY	PART NAME 1 2 3 4 5 6 (PRODUCT LEVEL)	SEE PAGE
	1	1	**2C-9259**	1	PLATE-IDENTIFICATION (CAT)	
Y	2	1	**7Y-2219**	1	ADJUSTER GP-BUCKET (B-FAMILY)	755
	3	1	**312-5694**	1	SETSCREW (1/4-20X0.25-IN)	
Y	4	1	*388-9597*	1	BUCKET AS-GENERAL PURPOSE	767

Y - SEPARATE ILLUSTRATION

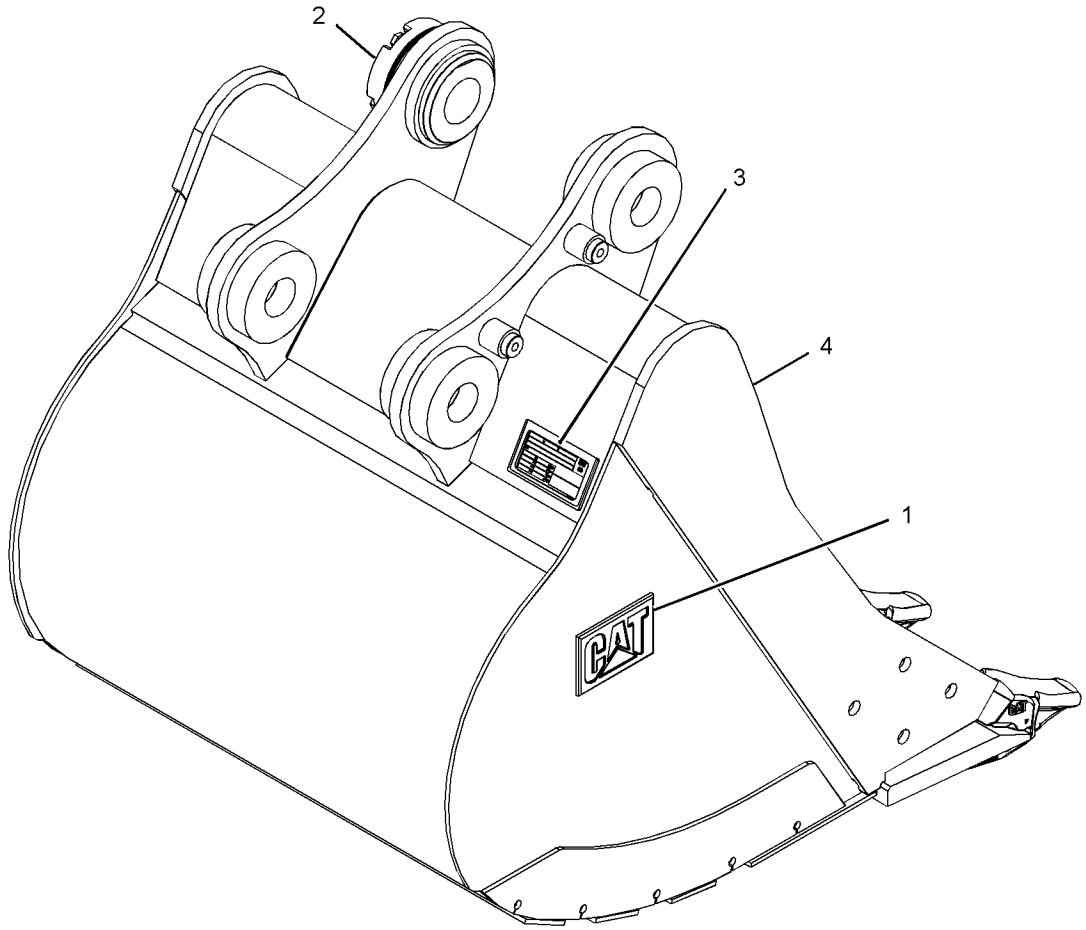

GRAPHIC #1 <END> g03364692

389-0254 BUCKET & ADJUSTER GP—GENERAL PURPOSE

S/N: CH91-UP

1300-MM (51-IN) WIDE X 1.07-CU M (1.41-CU YD) CAPACITY. K-80 ADAPTERS, QTY OF 5 AN ATTACHMENT

SMCS-6503, 6513 **i05916052**

NOTE	REF NO	GRAPHIC REF	PART NUMBER	QTY	PART NAME 1 2 3 4 5 6 (PRODUCT LEVEL)	SEE PAGE
	1	1	**2C-9259**	1	PLATE-IDENTIFICATION (CAT)	
Y	2	1	**7Y-2219**	1	ADJUSTER GP-BUCKET (B-FAMILY)	755
	3	1	**137-4234**	1	PLATE-IDENTIFICATION (WORK TOOL)	
Y	4	1	*389-0255*	1	BUCKET AS-GENERAL PURPOSE	768
	5	1	**312-5694**	1	SETSCREW (1/4-20X0.25-IN)	

Y - SEPARATE ILLUSTRATION

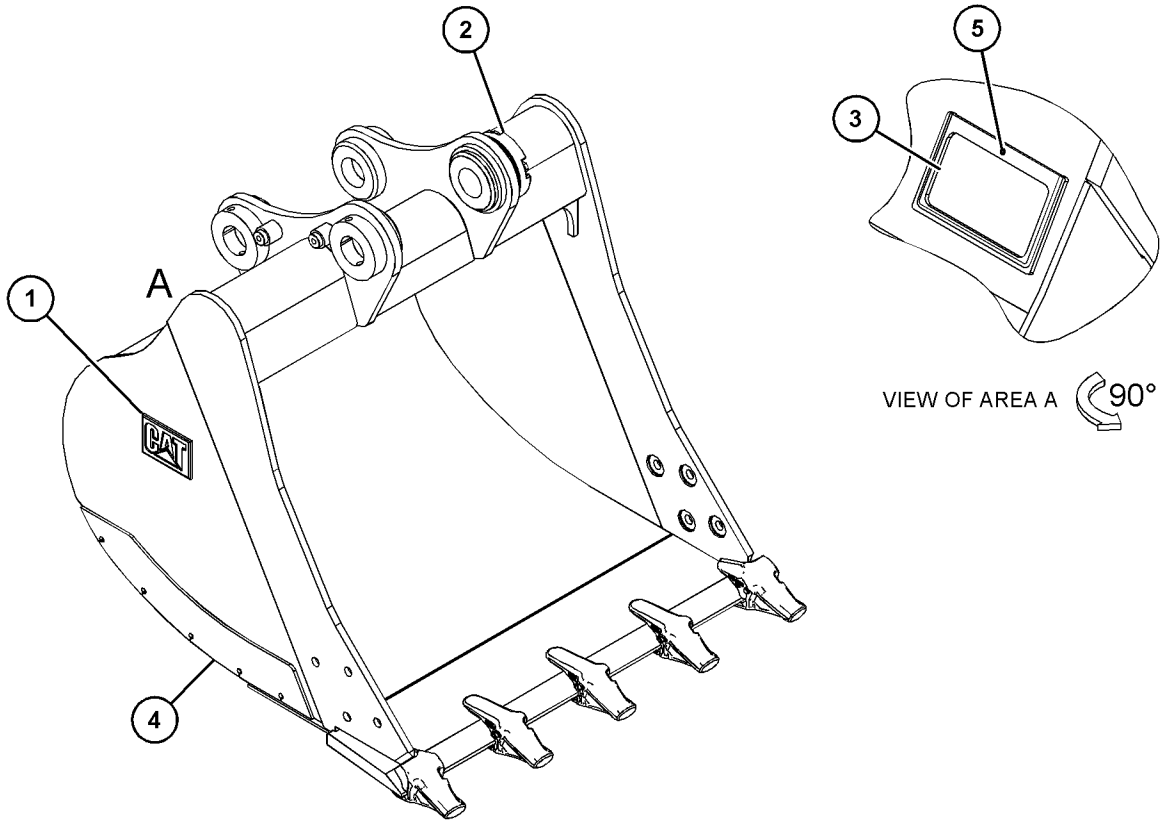

GRAPHIC #1 <END> g03577637

466-8424 BUCKET & ADJUSTER GP—GENERAL PURPOSE

S/N: CH91-UP

PART OF 466-8140 BUCKET AR-GENERAL PURPOSE

AN ATTACHMENT

SMCS-6503, 6513 **i05946827**

NOTE	REF NO	GRAPHIC REF	PART NUMBER	QTY	PART NAME 1 2 3 4 5 6 (PRODUCT LEVEL)	SEE PAGE
	1	1	**2C-9259**	1	PLATE-IDENTIFICATION (CAT)	
Y	2	1	**7Y-2219**	1	ADJUSTER GP-BUCKET (B-FAMILY)	755
	3	1	**137-4234**	1	PLATE-IDENTIFICATION (WORK TOOL)	
Y	4	1	*466-8425*	1	BUCKET AS-GENERAL PURPOSE	769
	5	1	**312-5694**	1	SETSCREW (1/4-20X0.25-IN)	

Y - SEPARATE ILLUSTRATION

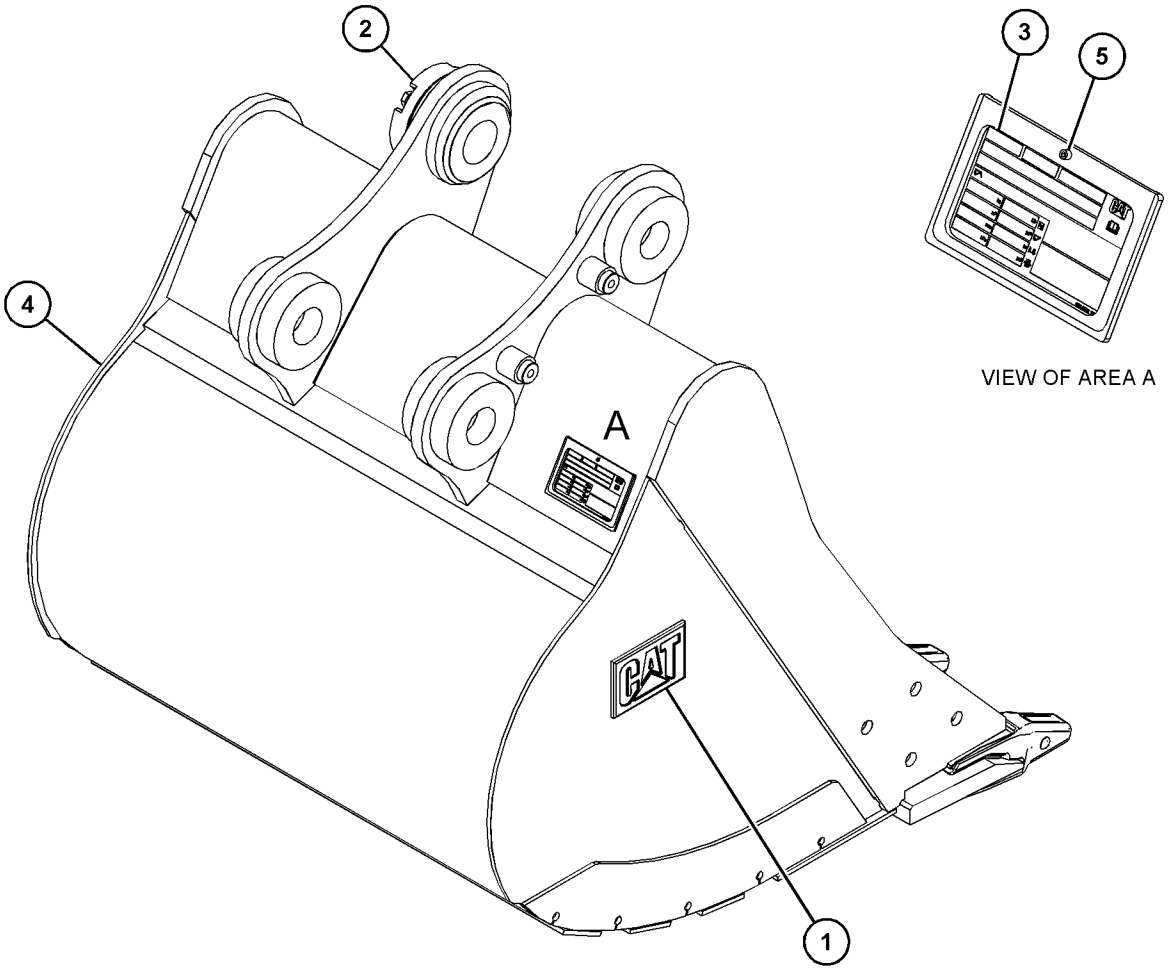

GRAPHIC #1 <END> g03744410

466-8140 BUCKET AR-GENERAL PURPOSE

S/N: CH91-UP

AN ATTACHMENT

SMCS-6101 **i05946814**

NOTE	REF NO	GRAPHIC REF	PART NUMBER	QTY	PART NAME 1 2 3 4 5 6 (PRODUCT LEVEL)	SEE PAGE
	1	1	**9J-3167**	5	TIP GP-LONG (J-300)	
					(EACH INCLUDES)	
		1	**1U-3302**	1	TIP-LONG	
		1	**8E-6259**	1	RETAINER AS	
		1	**107-3308**	1	PIN	
Y	2	1	*380-1204*	1	SIDECUTTER GP	790
Y	3	1	*466-8424*	1	BUCKET & ADJUSTER GP	764

Y - SEPARATE ILLUSTRATION

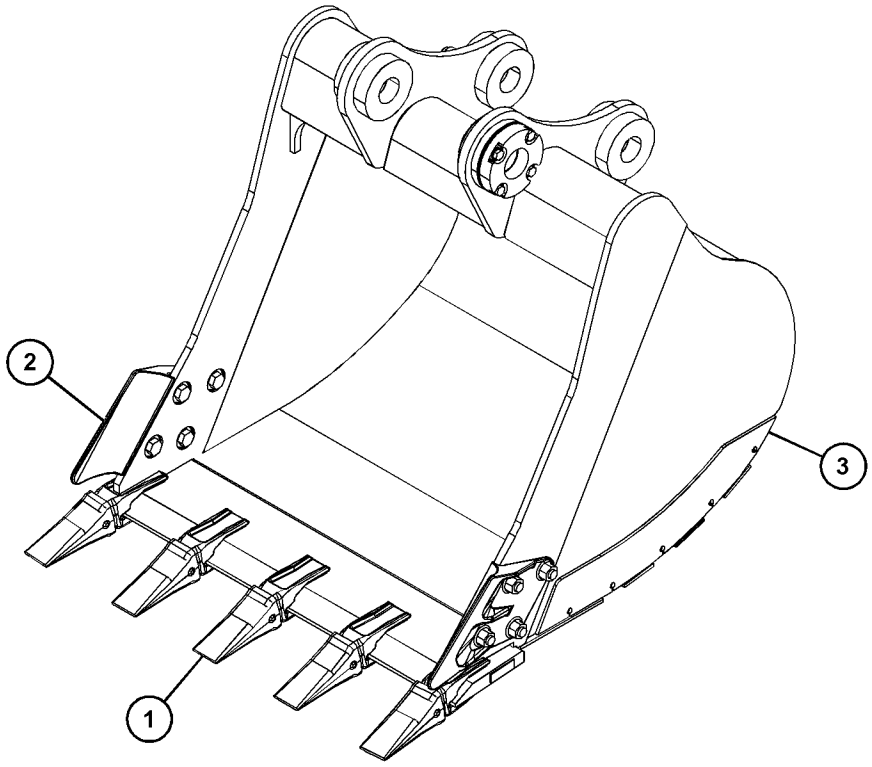

GRAPHIC #1 <END> g03745734

388-9592 BUCKET AS-GENERAL PURPOSE

S/N: CH91-UP

600-MM (24-IN) WIDE X 0.4-CU M (0.5 CU YD) CAPACITY. K-80 ADAPTERS, QTY OF 3

PART OF 388-9586 BUCKET & ADJUSTER GP

AN ATTACHMENT

SMCS-6101 **i05916053**

NOTE	REF NO	GRAPHIC REF	PART NUMBER	QTY	PART NAME 1 2 3 4 5 6 (PRODUCT LEVEL)	SEE PAGE
	1	1	**376-3933**	3	PLATE-WEAR	
	2	1	**389-0957**	1	PLATE-WEAR	
	3	1	**347-7580**	1	EDGE AS	
	3A	1	**220-9084**	1	ADAPTER-TIP (K-80, 2-STRAP, CENTER)	
	3B	1	**232-2085**	1	ADAPTER-TIP (K-80, 2-STRAP, RH)	
	3C	1	**232-2086**	1	ADAPTER-TIP (K-80, 2-STRAP, LH)	
	3D	1	**8P-9770**	1	PLATE	
	4	1	**388-9612**	1	PLATE AS-HINGE	
	5	1	*388-9605*	1	PLATE AS (RH)	
		1	**388-9609**	1	PLATE (RH)	
		1	**388-9636**	1	PLATE-WEAR	
	6	1	*388-9604*	1	PLATE AS (LH)	
		1	**388-9608**	1	PLATE (LH)	
		1	**388-9636**	1	PLATE-WEAR	

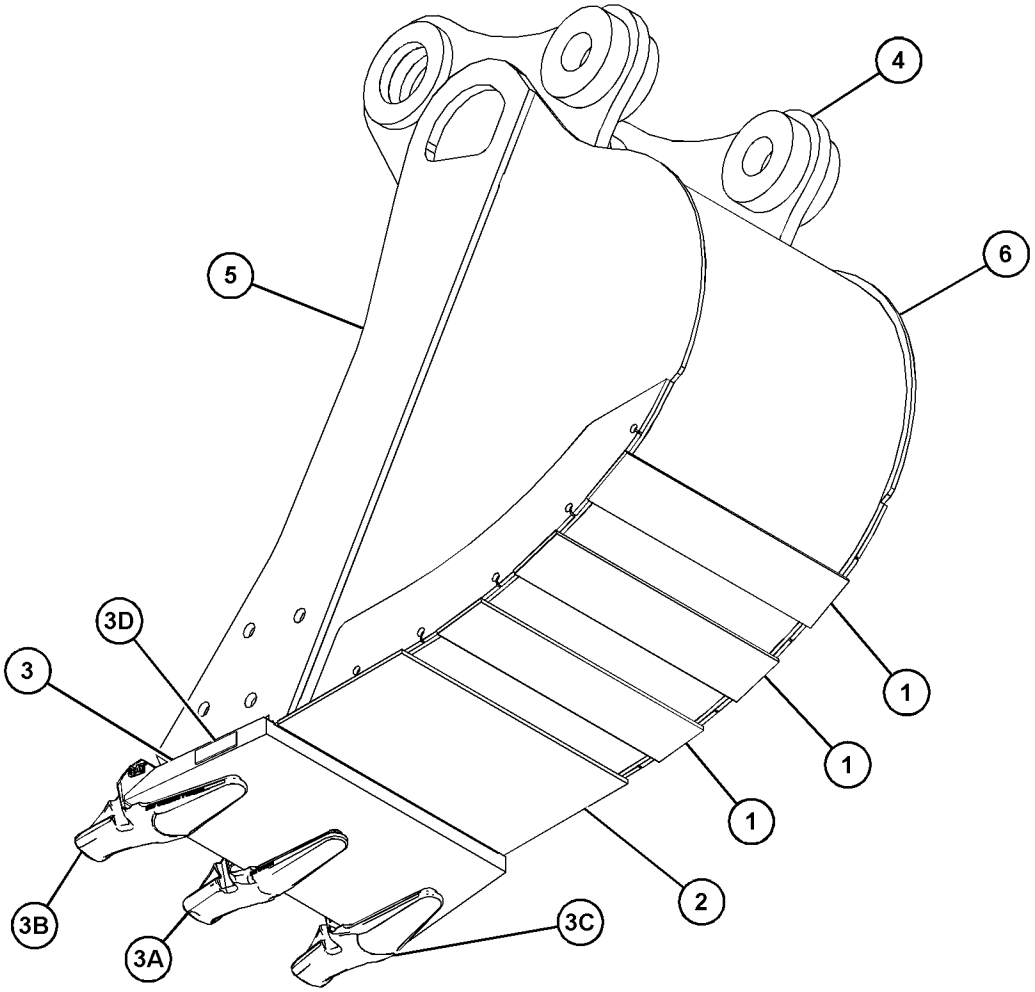

GRAPHIC #1 <END> g03588579

388-9597 BUCKET AS-GENERAL PURPOSE

S/N: CH91-UP

1400-MM (55-IN) WIDE X 1.2-CU M (1.6-CU YD) CAPACITY. K-80 ADAPTERS, QTY OF 5

PART OF 388-9591 BUCKET & ADJUSTER GP

AN ATTACHMENT

SMCS-6101 **i05916083**

NOTE	REF NO	GRAPHIC REF	PART NUMBER	QTY	PART NAME 1 2 3 4 5 6 (PRODUCT LEVEL)	SEE PAGE
	1	1	**389-0963**	1	PLATE-WEAR	
	2	1	**388-9618**	1	PLATE AS-HINGE	
	3	1	*388-9607*	1	PLATE AS (RH)	
	3A	1	**388-9611**	1	PLATE	
	3B	1	**388-9636**	1	PLATE-WEAR	
	4	1	*388-9606*	1	PLATE AS (LH)	
	4A	1	**388-9610**	1	PLATE	
	4B	1	**388-9636**	1	PLATE-WEAR	
	5	1	**357-9723**	3	PLATE-WEAR	
	6	1	**347-7589**	1	EDGE AS	
	6A	1	**220-9084**	3	ADAPTER-TIP (K-80, 2-STRAP, CENTER)	
	6B	1	**232-2085**	1	ADAPTER-TIP (K-80, 2-STRAP, RH)	
	6C	1	**232-2086**	1	ADAPTER-TIP (K-80, 2-STRAP, LH)	
	6D	1	**347-7599**	1	EDGE	
	6E	1	**8P-9770**	1	PLATE	

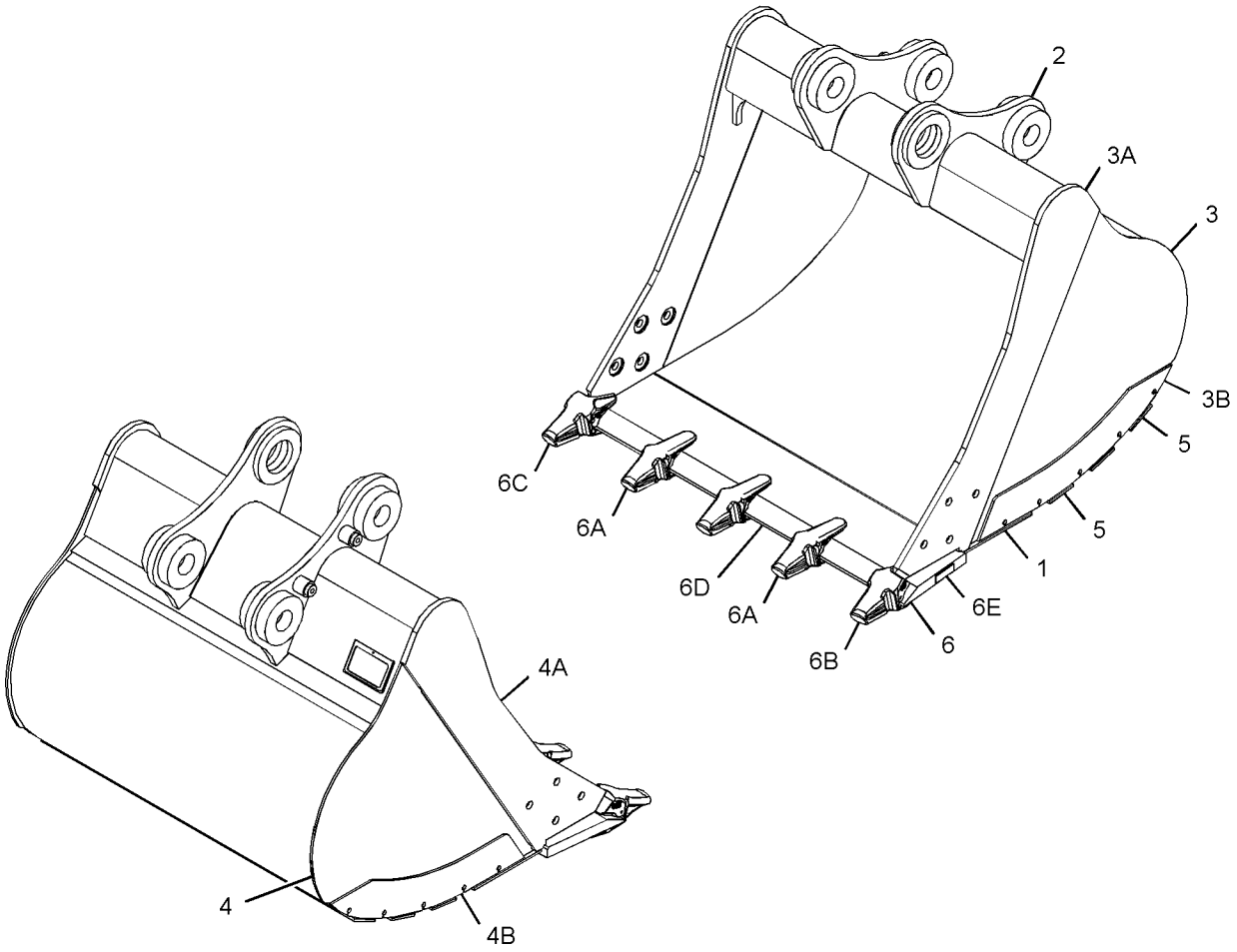

GRAPHIC #1 <END> g03352459

389-0255 BUCKET AS-GENERAL PURPOSE—GENERAL DUTY

S/N: CH91-UP
1300-MM (51-IN) WIDE X 1.07-CU M (1.41-CU YD) CAPACITY
PART OF 389-0254 BUCKET & ADJUSTER GP
AN ATTACHMENT

SMCS-6101 **i05972237**

NOTE	REF NO	GRAPHIC REF	PART NUMBER	QTY	PART NAME 1 2 3 4 5 6 (PRODUCT LEVEL)	SEE PAGE
	1	1	**362-9274**	3	PLATE-WEAR	
	2	1	**389-0962**	1	PLATE-WEAR	
	3	1	**347-7587**	1	EDGE AS	
	3A	1	**220-9084**	3	ADAPTER-TIP (K-80, 2-STRAP, CENTER)	
	3B	1	**232-2085**	1	ADAPTER-TIP (K-80, 2-STRAP, RH)	
	3C	1	**232-2086**	1	ADAPTER-TIP (K-80, 2-STRAP, LH)	
	3D	1	**8P-9770**	1	PLATE	
	4	1	**388-9617**	1	PLATE AS-HINGE	
	5	1	*388-9607*	1	PLATE AS (RH)	
		1	**388-9611**	1	PLATE (RH)	
		1	**388-9636**	1	PLATE-WEAR	
	6	1	*388-9606*	1	PLATE AS (LH)	
		1	**388-9610**	1	PLATE (LH)	
		1	**388-9636**	1	PLATE-WEAR	

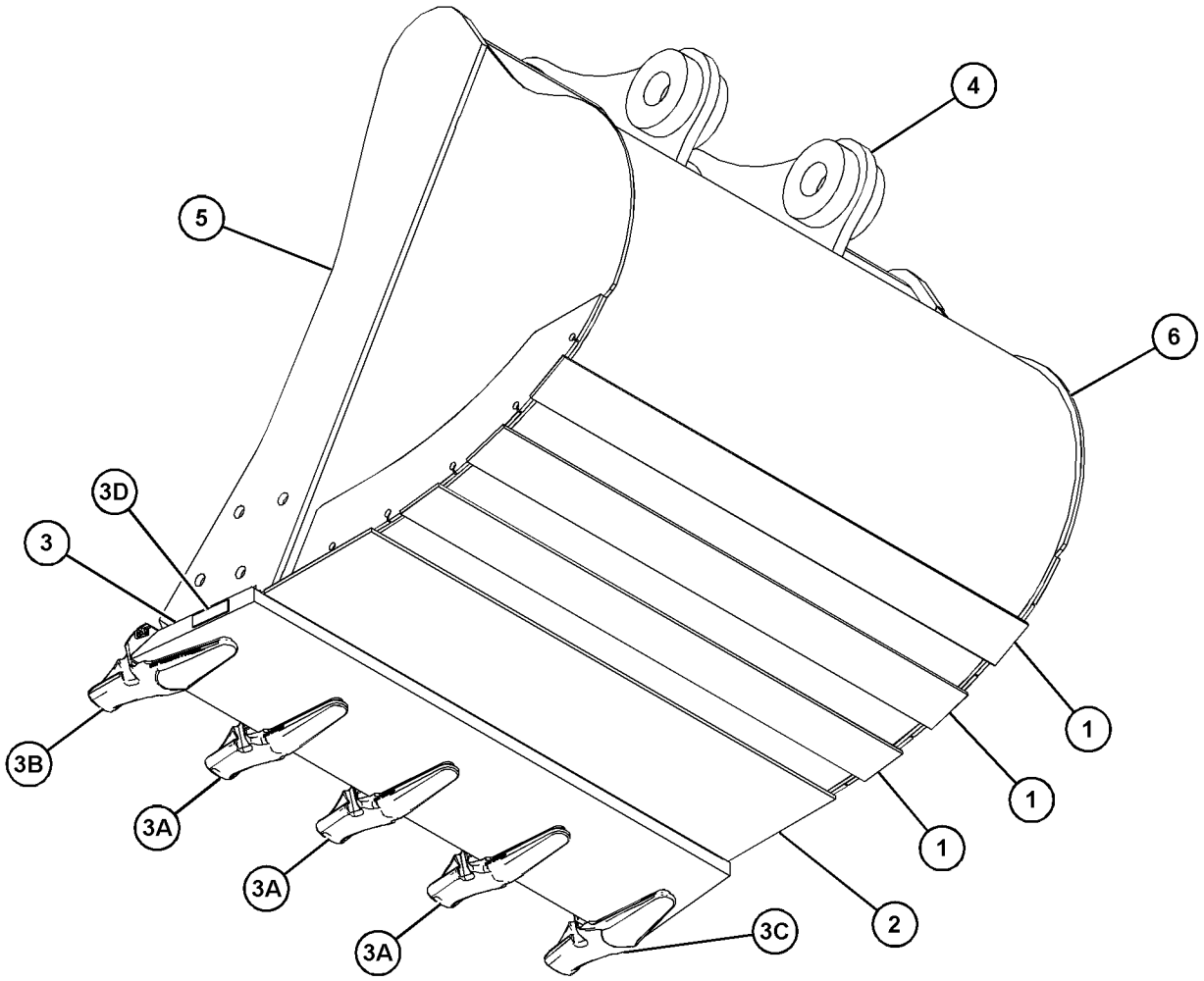

GRAPHIC #1 <END> g03578564

466-8425 BUCKET AS-GENERAL PURPOSE

S/N: CH91-UP
1197-MM (47.2-IN) WIDE X 1.0-CU M (1.31-CU YD) CAPACITY
PART OF 466-8424 BUCKET & ADJUSTER GP
AN ATTACHMENT

SMCS-6101 **i05970825**

NOTE	REF NO	GRAPHIC REF	PART NUMBER	QTY	PART NAME 1 2 3 4 5 6 (PRODUCT LEVEL)	SEE PAGE
	1	1	**358-8606**	3	PLATE-WEAR	
	2	1	**389-0961**	1	PLATE-WEAR	
	3	1	**391-1474**	1	PLATE AS-HINGE	
	4	1	*466-8426*	1	PLATE AS (LH)	
		1	**388-9636**	1	PLATE-WEAR	
	5	1	*466-8427*	1	PLATE AS (RH)	
		1	**388-9636**	1	PLATE-WEAR	
	6	1	**421-7486**	1	EDGE AS	
	6A	1	**8E-9490**	5	ADAPTER-TIP (J-300, 2-STRAP)	
	6B	1	**8P-9770**	1	PLATE	

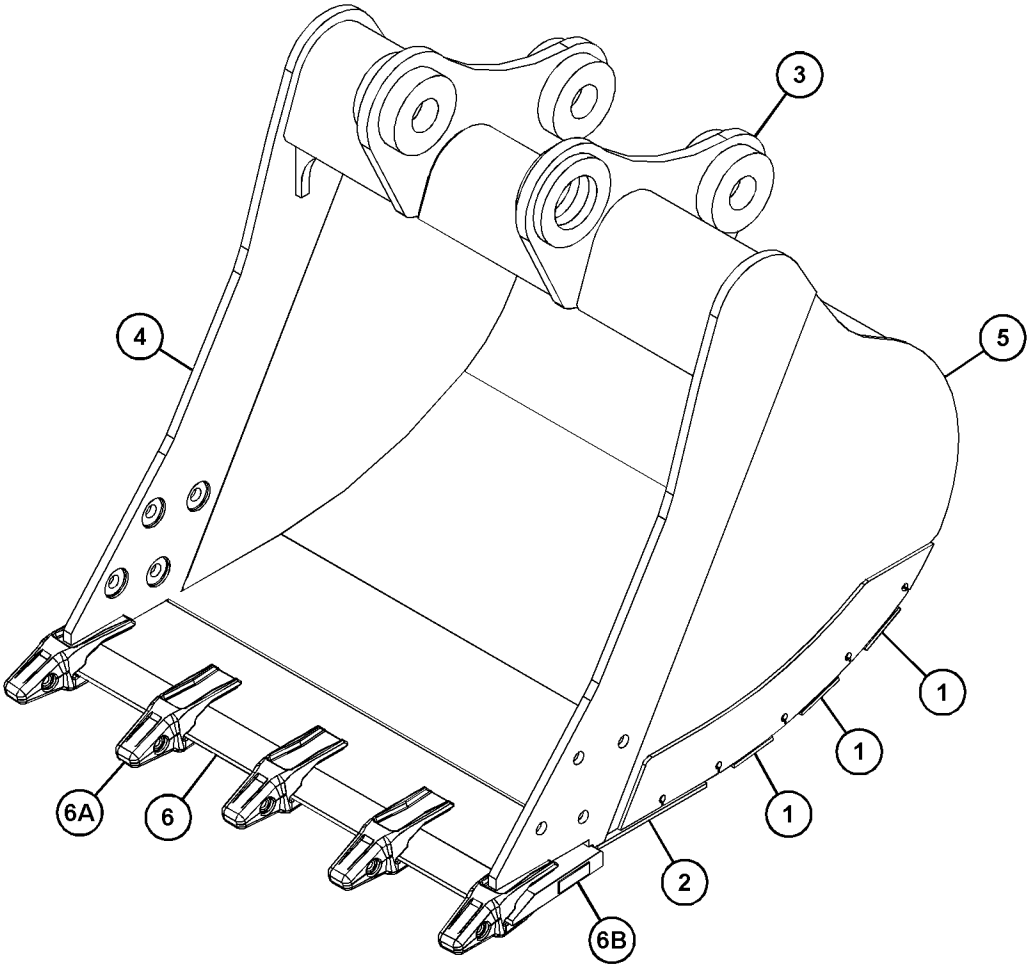

GRAPHIC #1 <END> g03746852

355-2511 BUCKET GP-GENERAL PURPOSE

S/N: CH91-UP

1200-MM (48-IN) WIDE X 0.9-CU M (1.2-CU YD)CAPACITY. K-90 ADAPTERS, QTY OF 5

FOR USE WITH QUICK COUPLER

AN ATTACHMENT

SMCS-6101 **i05525174**

NOTE	REF NO	GRAPHIC REF	PART NUMBER	QTY	PART NAME 1 2 3 4 5 6 (PRODUCT LEVEL)	SEE PAGE
	1	1	**2C-9259**	1	PLATE-IDENTIFICATION (CAT)	
	2	1	**312-5694**	1	SETSCREW (1/4-20X0.25-IN)	
	3	1	*355-2518*	1	BUCKET AS-GENERAL PURPOSE	
	4	1	**358-8602**	1	EDGE AS	
	4A	1	**8P-9770**	1	PLATE	
	4B	1	**220-9084**	3	ADAPTER-TIP (K-80, 2-STRAP, CENTER)	
	4C	1	**232-2085**	1	ADAPTER-TIP (K-80, 2-STRAP, RH)	
	4D	1	**232-2086**	1	ADAPTER-TIP (K-80, 2-STRAP, LH)	
	5	1	**358-8605**	1	PLATE-WEAR	
	6	1	**358-8606**	3	PLATE-WEAR	
	7	1	**364-0625**	1	PLATE AS-HINGE	
	8	1	**353-1601**	2	PLATE-WEAR	
	9	1	**353-1607**	1	PLATE (LH)	
	10	1	**353-2811**	1	PLATE (RH)	

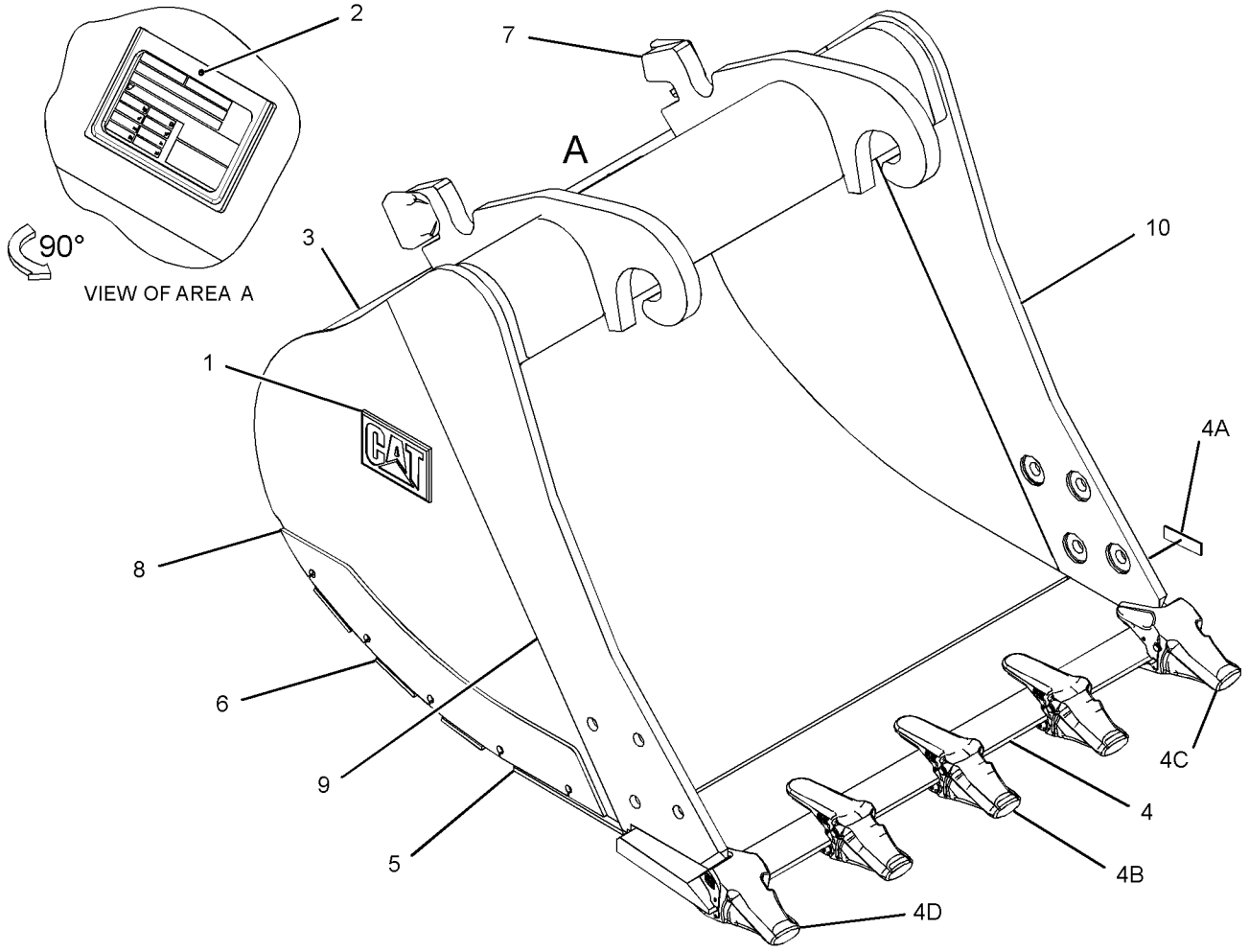

GRAPHIC #1 <END> g02760419

355-2512 BUCKET GP-GENERAL PURPOSE—QUICK COUPLER

S/N: CH91-UP

1308-MM (51-IN) WIDE X 1-CU M (1.31-CU YD) CAPACITY. K-80 ADAPTERS, QTY OF 5

FOR USE WITH CW-30 QUICK COUPLER

AN ATTACHMENT

SMCS-6101 **i05916047**

NOTE	REF NO	GRAPHIC REF	PART NUMBER	QTY	PART NAME 1 2 3 4 5 6 (PRODUCT LEVEL)	SEE PAGE
	1	1	**312-5694**	1	SETSCREW (1/4-20X0.25-IN)	
	2	1	*355-2519*	1	BUCKET AS-GENERAL PURPOSE	
	3	1	**362-9163**	1	EDGE AS	
	3A	1	**8P-9770**	1	PLATE	
	3B	1	**220-9084**	3	ADAPTER-TIP (K-80, 2-STRAP, CENTER)	
	3C	1	**232-2085**	1	ADAPTER-TIP (K-80, 2-STRAP, RH)	
	3D	1	**232-2086**	1	ADAPTER-TIP (K-80, 2-STRAP, LH)	
	4	1	**353-1601**	2	PLATE-WEAR	
	5	1	**362-9274**	3	PLATE-WEAR	
	6	1	**362-9165**	1	PLATE-WEAR	
	7	1	**353-1607**	1	PLATE (LH)	
	8	1	**353-2811**	1	PLATE (RH)	
	9	1	**365-4070**	1	PLATE AS-BOX	
	10	1	**2C-9259**	1	PLATE-IDENTIFICATION (CAT)	

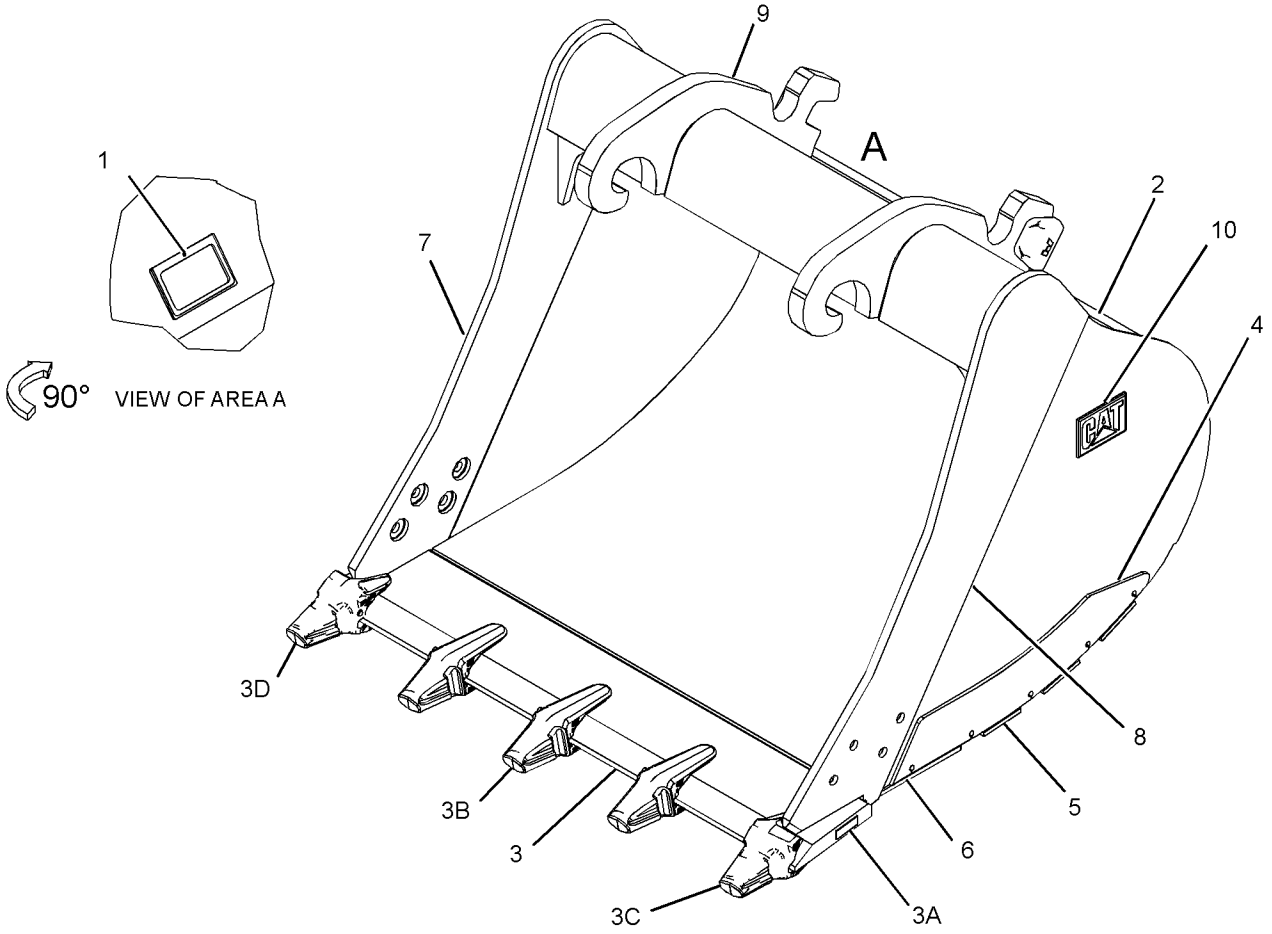

GRAPHIC #1 <END> g02604418

355-2513 BUCKET GP-GENERAL PURPOSE

S/N: CH91-UP

1400-MM (55-IN) WIDE X 1.1-CU M (1.4-CU YD) CAPACITY. K-80 ADAPTERS, QTY OF 5

FOR USE WITH QUICK COUPLER

AN ATTACHMENT

SMCS-6101 **i06599187**

NOTE	REF NO	GRAPHIC REF	PART NUMBER	QTY	PART NAME 1 2 3 4 5 6 (PRODUCT LEVEL)	SEE PAGE
	1	1	**2C-9259**	1	PLATE-IDENTIFICATION (CAT)	
	2	1	**312-5694**	1	SETSCREW (1/4-20X0.25-IN)	
	3	1	*355-2520*	1	BUCKET AS-GENERAL PURPOSE	
	4	1	**357-9720**	1	EDGE AS	
	4A	1	**8P-9770**	1	PLATE	
	4B	1	**220-9084**	3	ADAPTER-TIP (K-80, 2-STRAP, CENTER)	
	4C	1	**232-2085**	1	ADAPTER-TIP (K-80, 2-STRAP, RH)	
	4D	1	**232-2086**	1	ADAPTER-TIP (K-80, 2-STRAP, LH)	
	5	1	**357-9722**	1	PLATE-WEAR	
	6	1	**357-9723**	3	PLATE-WEAR	
	7	1	**377-4081**	1	PLATE AS-HINGE	
	8	1	**353-1601**	2	PLATE-WEAR	
	9	1	**353-1607**	1	PLATE (LH)	
	10	1	**353-2811**	1	PLATE (RH)	

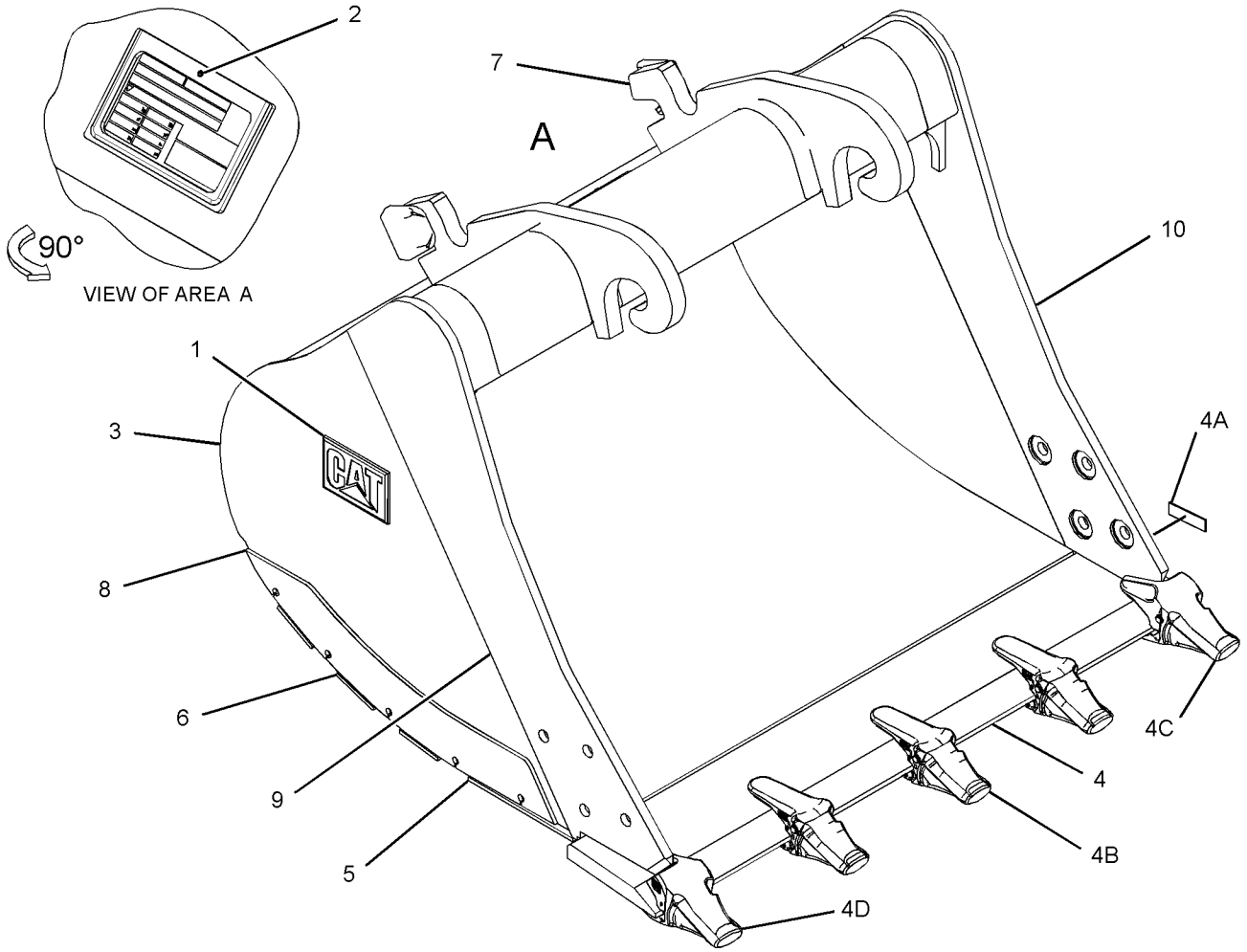

GRAPHIC #1 <END> g02760541

174-2525 COUPLER AR-QUICK—HYDRAULIC

S/N: CH91-UP

AN ATTACHMENT

SMCS-1408, 5057, 6129 **i07833400**

NOTE	REF NO	GRAPHIC REF	PART NUMBER	QTY	PART NAME 1 2 3 4 5 6 (PRODUCT LEVEL)	SEE PAGE
Y	1	1	*169-0701*	1	LOCK GP-QUICK COUPLER (HYDRAULIC)	785
Y	2	1	*415-1625*	1	COUPLER GP-QUICK	779
M	3	1	**136-0155**	2	SETSCREW (M4X0.7X8-MM)	
	4	1	**228-3369**	2	FILM-WARNING (DO NOT OPERATE, READ OMM)	
	5	1	**150-8896**	2	FILM-NOTICE (LIFT EYE LOCATION)	
	6	1	**168-8672**	1	PLATE-IDENTIFICATION (SERIAL NUMBER)	

M - METRIC PART
Y - SEPARATE ILLUSTRATION

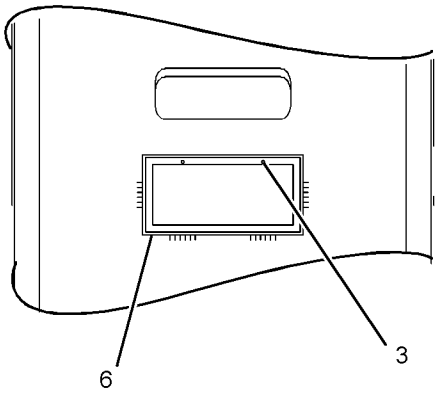

VIEW A-A

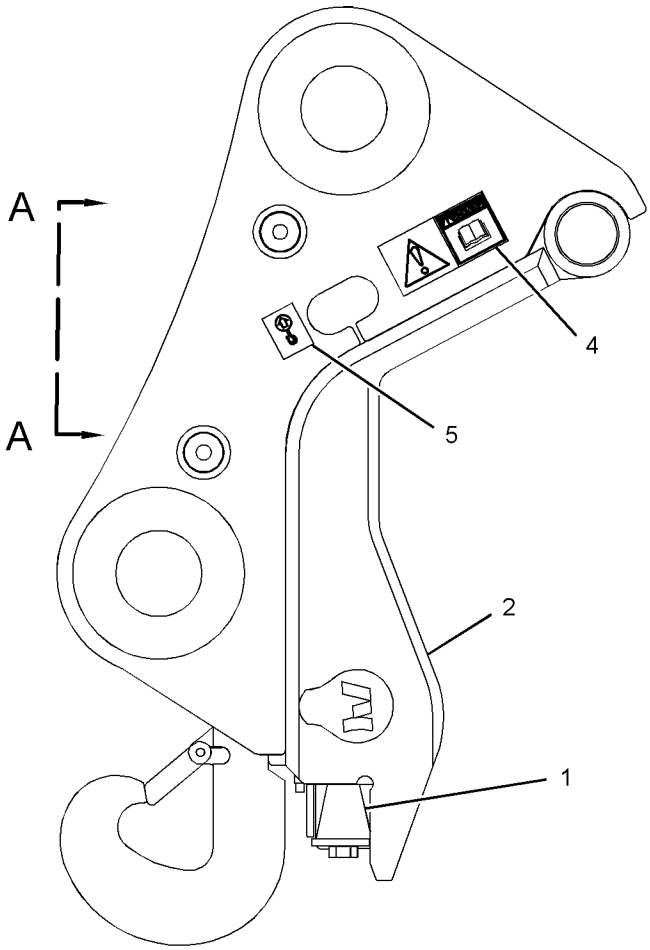

GRAPHIC #1 <END> g03187767

174-2526 COUPLER AR-QUICK—MECHANICAL

S/N: CH91-UP

AN ATTACHMENT

SMCS-1408, 5057, 6129 **i05916036**

NOTE	REF NO	GRAPHIC REF	PART NUMBER	QTY	PART NAME 1 2 3 4 5 6 (PRODUCT LEVEL)	SEE PAGE
Y	1	1	*171-3689*	1	LOCK GP-QUICK COUPLER (MECHANICAL)	787
	2	1	**150-8896**	2	FILM-NOTICE (LIFT EYE LOCATION)	
	3	1	**168-8672**	1	PLATE-IDENTIFICATION (SERIAL NUMBER)	
	4	1	**228-3369**	2	FILM-WARNING (DO NOT OPERATE, READ OMM)	
Y	5	1	*415-1625*	1	COUPLER GP-QUICK	779
M	6	1	**136-0155**	2	SETSCREW (M4X0.7X8-MM)	

M - METRIC PART
Y - SEPARATE ILLUSTRATION

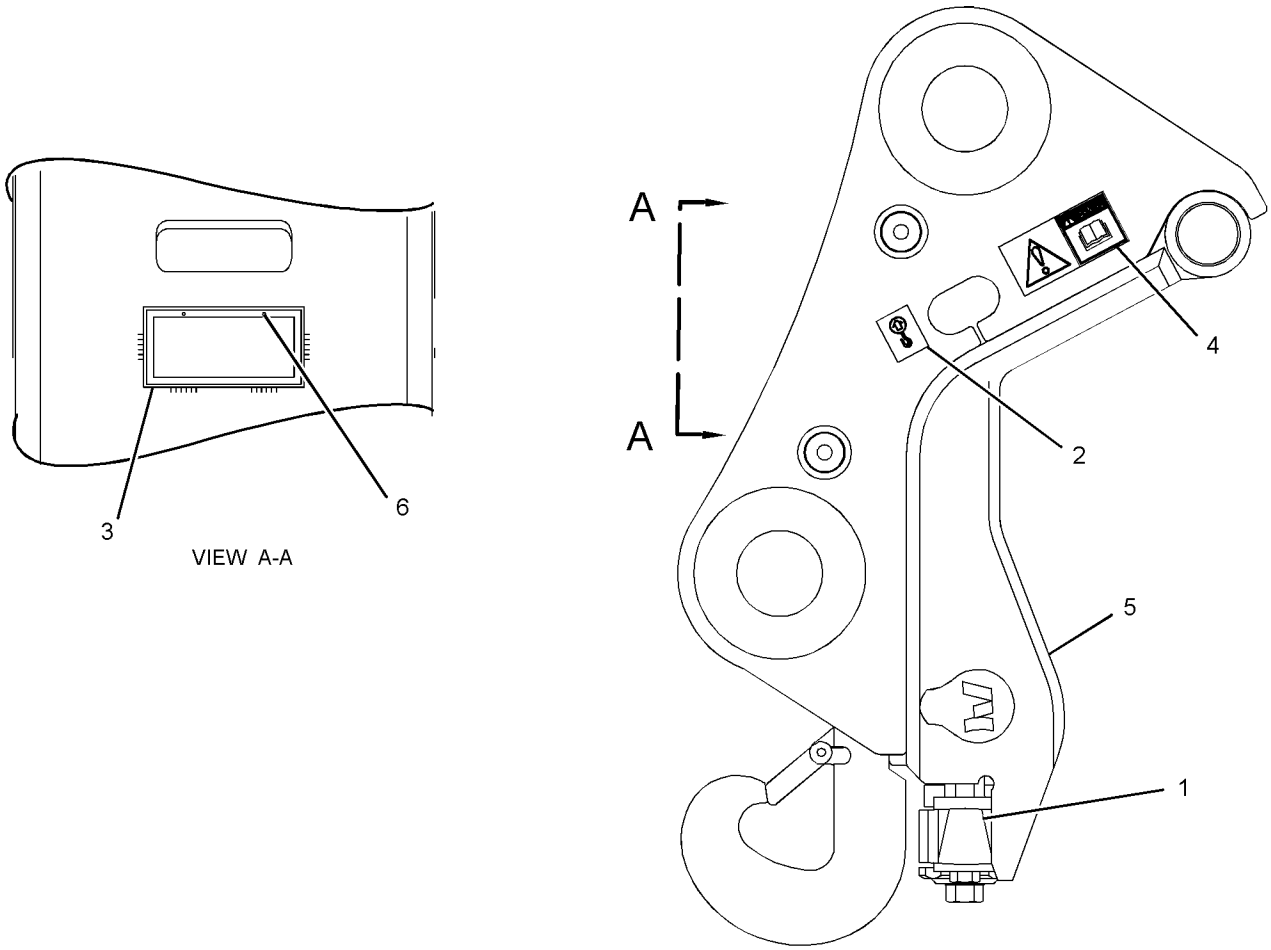

GRAPHIC #1 <END> g03189157

455-3909 COUPLER AR-QUICK—B-LINKAGE

S/N: CH91-UP
AN ATTACHMENT

SMCS-1408, 5057, 6129 **i06268264**

NOTE	PART NUMBER	QTY	PART NAME 1 2 3 4 5 6 (PRODUCT LEVEL)	SEE PAGE
Y	*455-3910*	1	COUPLER AR-QUICK	775
Y	*177-8628*	1	PIN GP (COUPLER)	743
Y - SEPARATE ILLUSTRATION				

<END>

455-3910 COUPLER AR-QUICK—B-LINKAGE

S/N: CH91-UP
PART OF 455-3909 COUPLER AR-QUICK
AN ATTACHMENT

SMCS-1408, 5057, 6129 **i06542330**

NOTE	PART NUMBER	QTY	PART NAME 1 2 3 4 5 6 (PRODUCT LEVEL)	SEE PAGE
Y	**388-0067**	1	COUPLER GP-QUICK	776
Y	*449-1136*	1	LINES GP-COUPLER	463
	160-8290	2	SHIM (1-MM THK)	
Y - SEPARATE ILLUSTRATION				

<END>

498-0707 COUPLER AR-QUICK

S/N: CH91-UP
AN ATTACHMENT

SMCS-1408, 5057, 6129 **i06835669**

NOTE	PART NUMBER	QTY	PART NAME 1 2 3 4 5 6 (PRODUCT LEVEL)	SEE PAGE
Y	**388-0067**	1	COUPLER GP-QUICK	776
Y	*493-4062*	1	LINES GP-COUPLER	465
	160-8290	2	SHIM (1-MM THK)	
Y - SEPARATE ILLUSTRATION				

<END>

388-0067 COUPLER GP-QUICK–B-LINKAGE

S/N: CH91-UP

PART OF 455-3910, 498-0707 COUPLER AR-QUICK

AN ATTACHMENT

SMCS-1408, 5057, 6129 **i07331356**

NOTE	REF NO	GRAPHIC REF	PART NUMBER	QTY	PART NAME 1 2 3 4 5 6 (PRODUCT LEVEL)	SEE PAGE
M	1	1	**8T-4137**	1	BOLT (M10X1.5X20-MM)	
	2	1	**159-8036**	1	FILM-WARNING (READ OMM)	
	3	1	**355-5804**	2	PLUG	
	4	1	**388-0084**	1	LATCH	
	5	1	**388-0085**	1	ROCKER ARM (LH)	
	6	1	**388-0086**	1	ROCKER ARM (RH)	
	7	1	**388-0088**	2	SPRING-SPACER	
	8	1	**388-0090**	2	SPRING-GUIDE	
	9	1	**388-0091**	1	PIN	
	10	1	**388-0099**	1	PIN	
I	11	1	**388-0105**	3	HOSE AS	
I	12	1	**388-0110**	1	HOSE AS	
	13	1	**388-6876**	1	PIN	
Y	14	1	**390-9505**	1	CYLINDER GP-COUPLER	361
I	15	1	**393-7499**	1	HOSE AS	
	16	1	**424-6681**	2	SPRING	
I	17	1	**440-5314**	1	HOSE AS	
I	18	1	**440-5315**	1	HOSE AS	
	19	1	**446-7944**	1	PIN	
M	20	1	**8T-4136**	5	BOLT (M10X1.5X25-MM)	
	21	1	**458-3274**	1	PLATE-COVER	
	22	1	**458-3275**	1	PLATE	
	23	1	**463-1603**	1	WEDGE	
	24	1	**096-0015**	4	RING-RETAINING	
	25	1	**2D-6398**	2	RING-RETAINING	
	26	1	**2P-1279**	2	LOCKNUT (9/16-18-THD)	
	27	1	**349-6114**	1	PIN	
	28	1	**3J-1907**	1	SEAL-O-RING	
	29	1	**3J-7354**	1	SEAL-O-RING	
	30	1	**4D-1322**	2	RING-RETAINING	
	31	1	**4D-7794**	2	CLIP	
	32	1	**4J-5477**	3	SEAL-O-RING	
	33	1	**3H-0120**	2	ELBOW	
	34	1	**5B-0935**	7	FITTING-GREASE	
	35	1	**5P-9436**	2	PLUG	
	36	1	**6J-7836**	2	RING-SNAP	
	37	1	**6V-8397**	3	SEAL-O-RING	
	38	1	**6V-8636**	1	CONNECTOR	
	39	1	**6V-8647**	1	CONNECTOR	
	40	1	**6V-8979**	1	ELBOW	
	41	1	**6V-8980**	1	ELBOW	
	42	1	**6V-9168**	2	NUT (11/16-16-THD)	
	43	1	**6V-9828**	1	CAP (ORFS)	
	44	1	**6V-9829**	1	CAP (ORFS)	
	45	1	**8T-4121**	7	WASHER-HARD (11X21X2.5-MM THK)	
	46	1	*458-3267*	1	COUPLER AS	

388-0067 **COUPLER GP-QUICK (**contd.**)** **i07331356**

NOTE	REF NO	GRAPHIC REF	PART NUMBER	QTY	PART NAME 1 2 3 4 5 6 (PRODUCT LEVEL)	SEE PAGE
M		1	**9R-2613**	1	BOSS-WELD (M10X1.5X25-MM)	
		1	**465-6315**	1	LIFT EYE	
		1	**475-0019**	12	PIN	
		1	**476-7093**	4	PIN	

I - REFER TO HYDRAULIC INFORMATION SYSTEM
M - METRIC PART
Y - SEPARATE ILLUSTRATION

388-0067 **COUPLER GP-QUICK (**contd.**)** **i07331356**

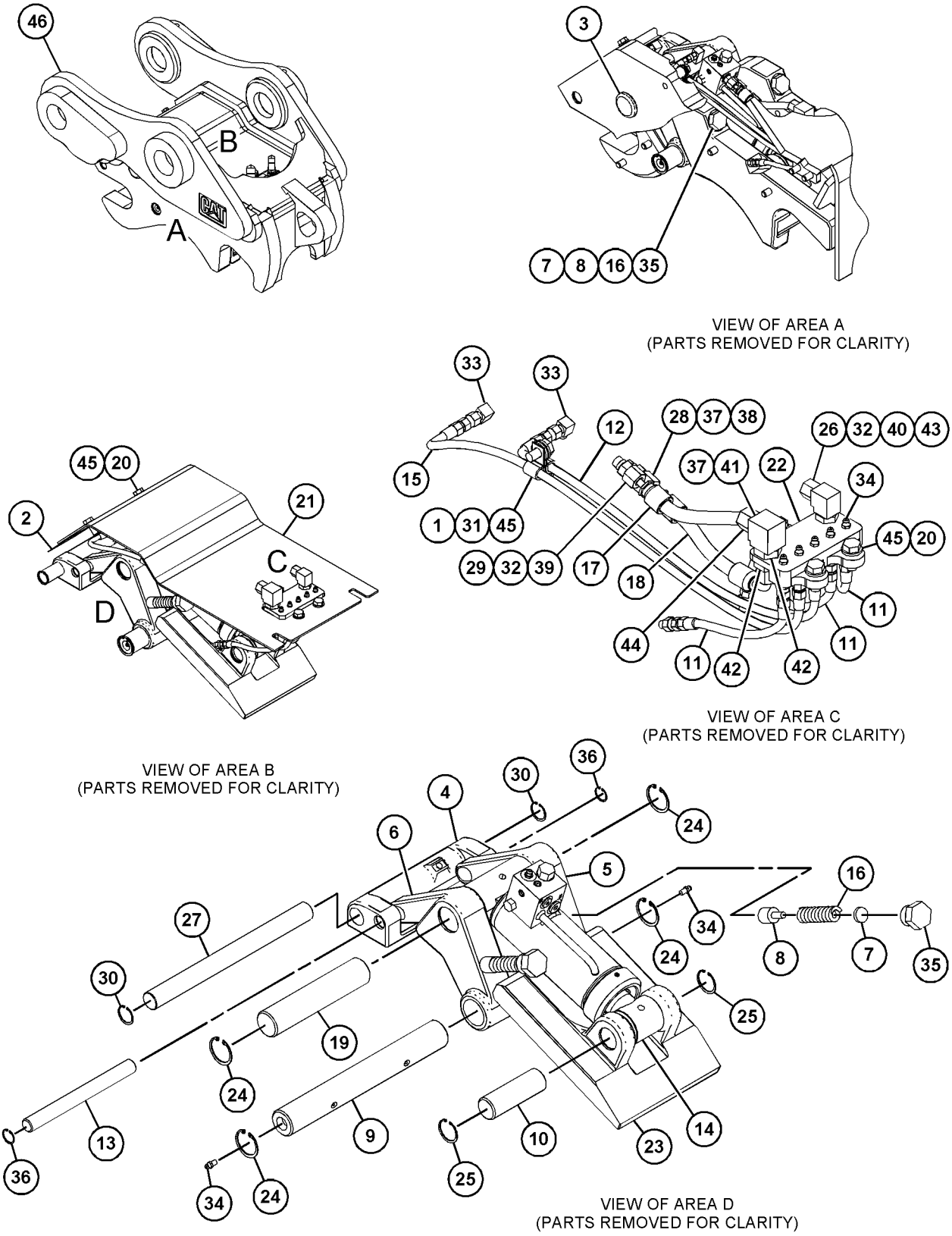

GRAPHIC #1 <END> g06183122

415-1625 COUPLER GP-QUICK

S/N: CH91-UP

PART OF 174-2525, 174-2526 COUPLER AR-QUICK

AN ATTACHMENT

SMCS-1408, 5057, 6129 **i05916038**

NOTE	REF NO	GRAPHIC REF	PART NUMBER	QTY	PART NAME 1 2 3 4 5 6 (PRODUCT LEVEL)	SEE PAGE
	1	1	*172-1102*	1	HOUSING AS-COUPLER	
		1	**192-5239**	1	HOLDER (SERIAL NUMBER PLATE)	
Y	2	1	**173-9956**	1	HOOK GP-LIFTING (10-TON CAPACITY) (10-TON CAPACITY)	780

Y - SEPARATE ILLUSTRATION

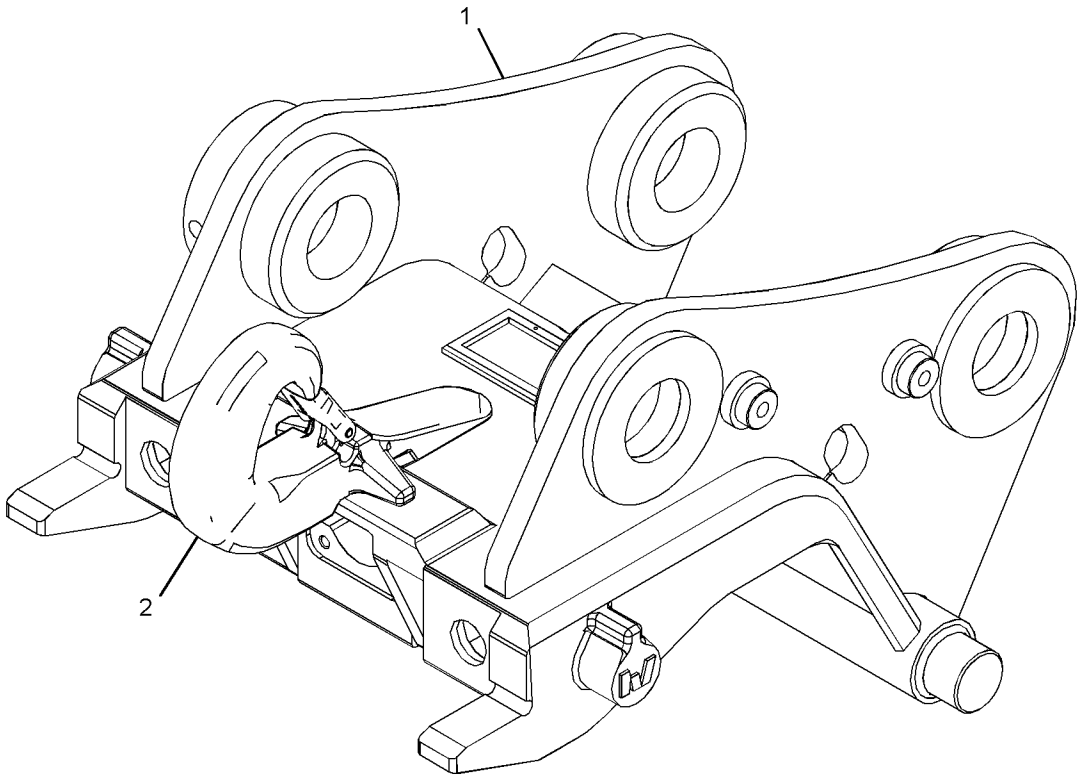

GRAPHIC #1 <END> g03208658

173-9956 HOOK GP-LIFTING

S/N: CH91-UP
PART OF 415-1625 COUPLER GP-QUICK
AN ATTACHMENT

SMCS-6459 **i05525413**

NOTE	REF NO	GRAPHIC REF	PART NUMBER	QTY	PART NAME 1 2 3 4 5 6 (PRODUCT LEVEL)	SEE PAGE
	1	1	**173-9970**	1	KIT-LATCH	
					(INCLUDES PIN, SPRING & LATCH)	

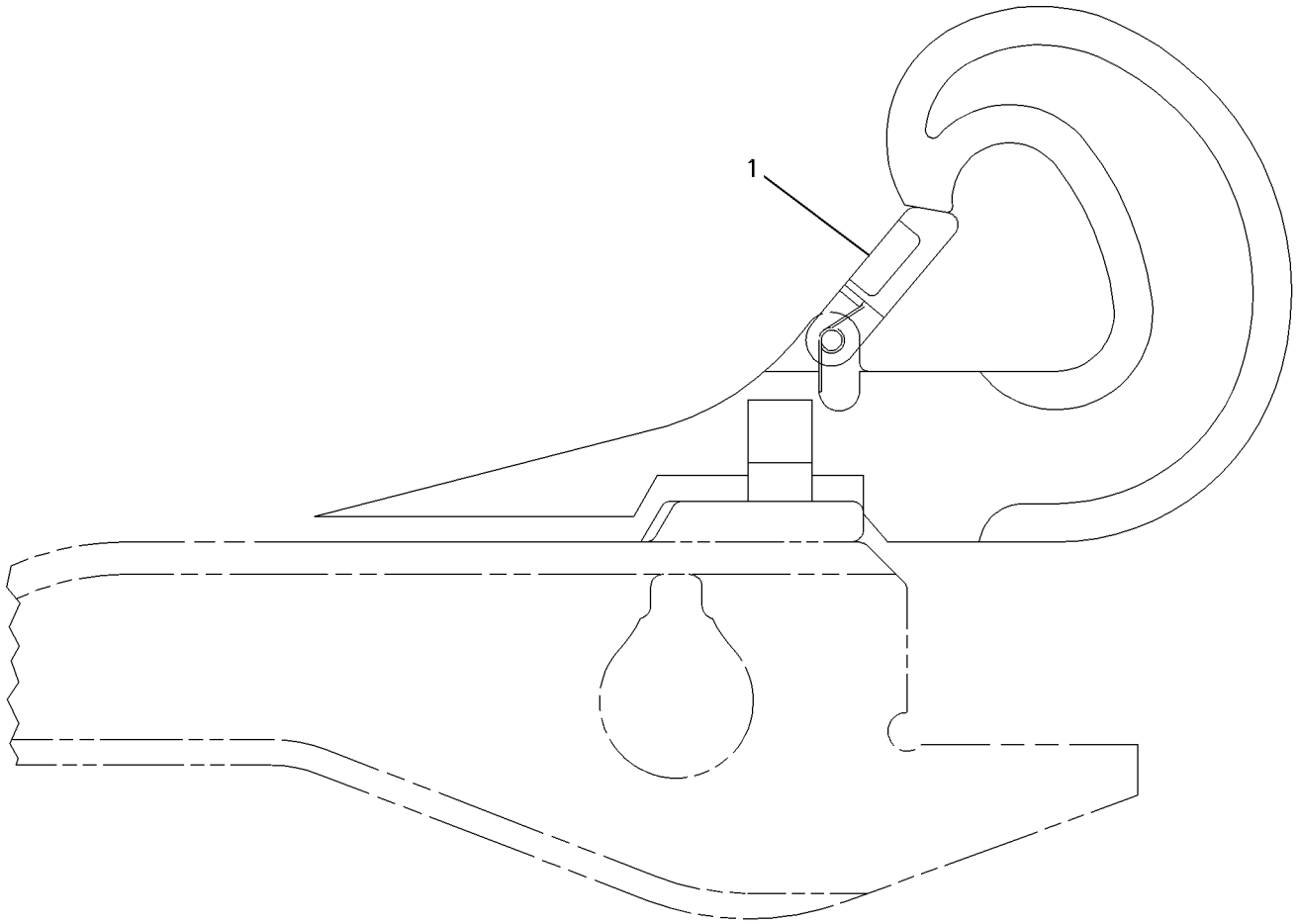

GRAPHIC #1 <END> g00576318

450-8372 LINES GP-GREASE

S/N: CH91-UP

PART OF 453-7132 BLADE AR, 455-4597 STABILIZER AR

AN ATTACHMENT

SMCS-7510 **i05772538**

NOTE	REF NO	GRAPHIC REF	PART NUMBER	QTY	PART NAME 1 2 3 4 5 6 (PRODUCT LEVEL)	SEE PAGE
	1	1	**5W-2817**	1	FITTING-GREASE	
	2	1	**117-7634**	2	FITTING-STRAIGHT	
	3	1	**452-6299**	1	HOSE AS	
B	4	1	**7K-1181**	4	STRAP-CABLE	

B - USE AS REQUIRED

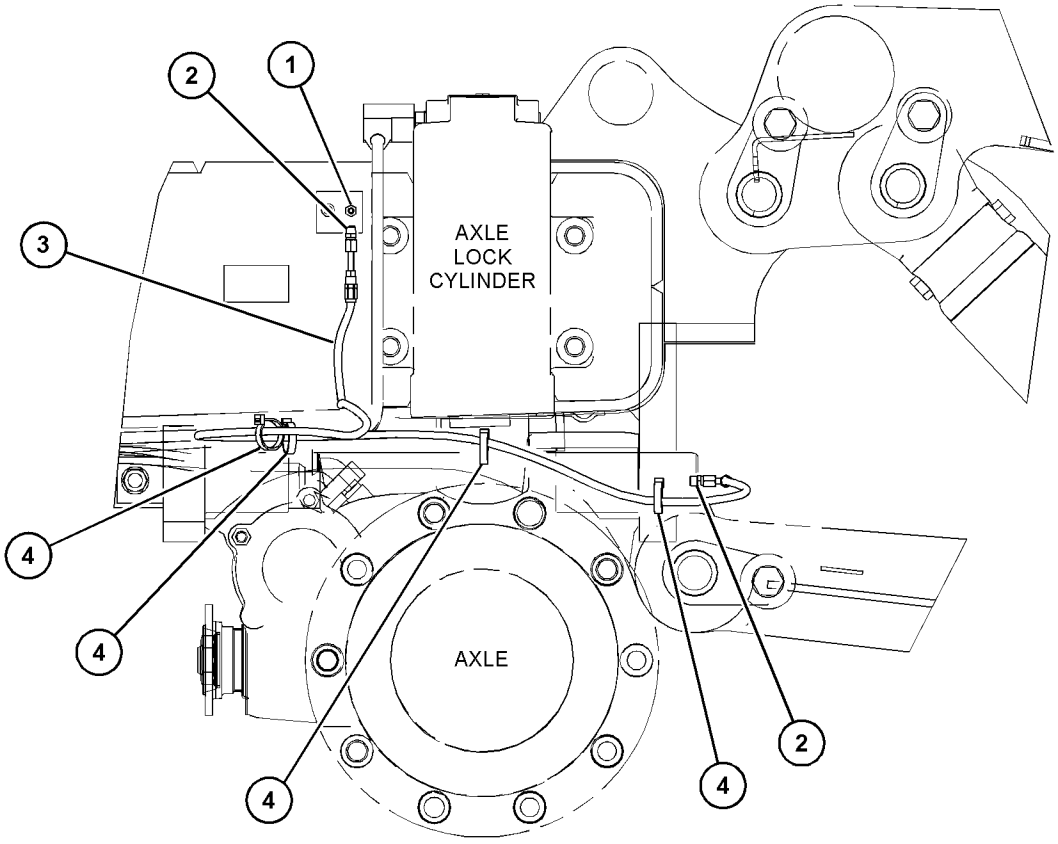

RIGHT SIDE VIEW

GRAPHIC #1 <END> g03692134

455-4595 LINES GP-GREASE—BLADE

S/N: CH91-UP

PART OF 453-7132, 454-8880 BLADE AR

AN ATTACHMENT

SMCS-7510 **i05926055**

NOTE	REF NO	GRAPHIC REF	PART NUMBER	QTY	PART NAME 1 2 3 4 5 6 (PRODUCT LEVEL)	SEE PAGE
	1	1	**5W-2817**	1	FITTING-GREASE	
	2	1	**117-7634**	4	FITTING-STRAIGHT	
	3	1	**117-7635**	6	ELBOW	
	4	1	**141-2778**	1	FITTING-STRAIGHT	
	5	1	**166-0036**	1	FILTER GP-GREASE (BOOM, STICK CYLINDER BEARING)	
		1	**5W-1701**	1	WASHER (22X27X1.5-MM THK)	
		1	**168-3158**	1	FILTER-GREASE (BOOM, STICK CYLINDER BEARING)	
	6	1	**240-8464**	1	BRACKET	
	7	1	**296-4895**	4	CONNECTOR	
	8	1	**328-9815**	2	ADAPTER-ELBOW	
Y	9	1	*455-4596*	1	LINES GP-GREASE	784
M	10	1	**274-8353**	2	BOLT-SOCKET HEAD (M5X0.8X30-MM)	
M	11	1	**295-4155**	1	BOLT-SOCKET HEAD (M5X0.8X35-MM)	
M	12	1	**5C-9553**	2	BOLT (M6X1X16-MM)	
B	13	1	**7K-1181**	16	STRAP-CABLE	

B - USE AS REQUIRED
M - METRIC PART
Y - SEPARATE ILLUSTRATION

455-4595 **LINES GP-GREASE (**contd.**)** **i05926055**

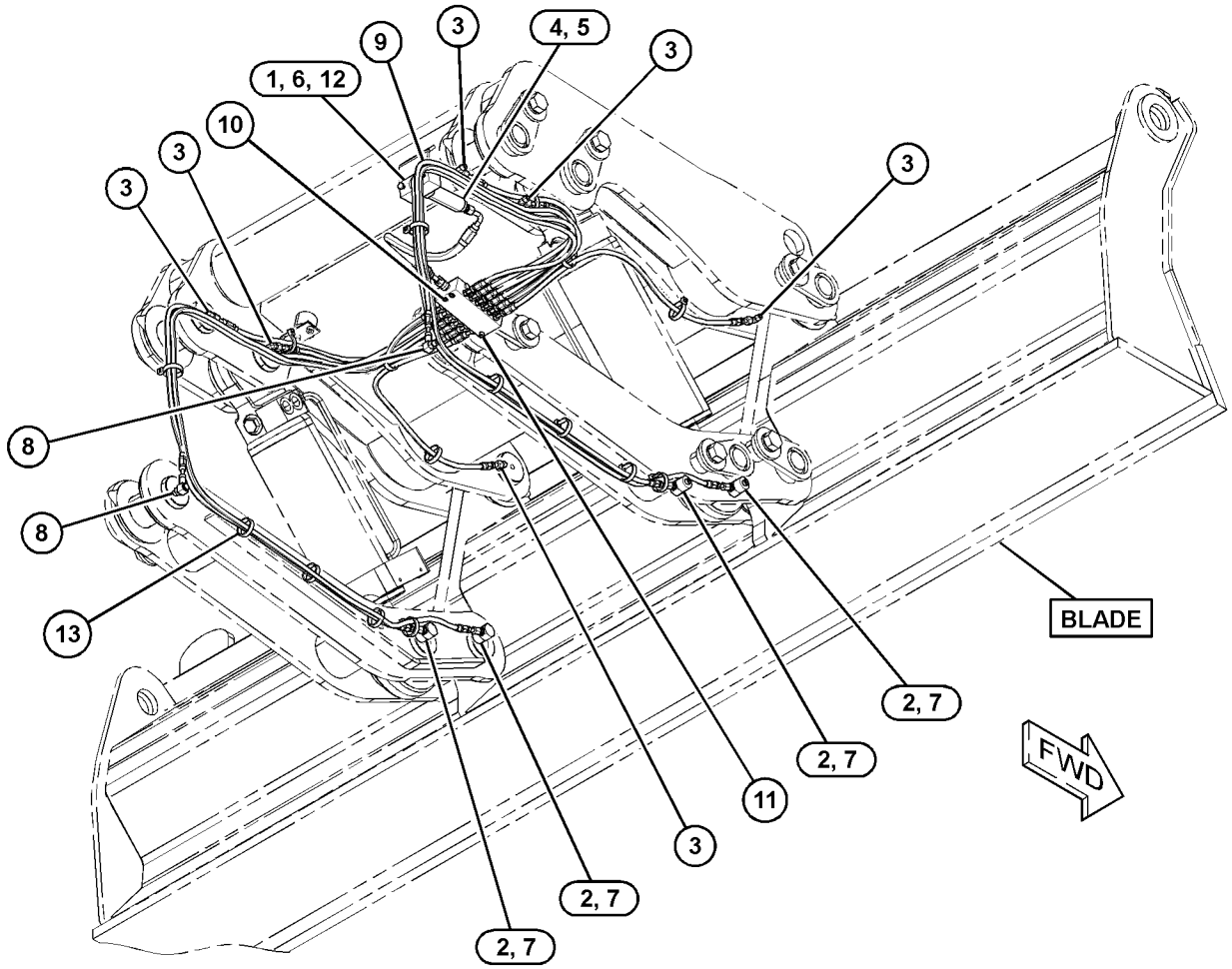

GRAPHIC #1 <END> g03743202

455-4596 LINES GP-GREASE—DOZER ANGLE

S/N: CH91-UP
PART OF 455-4595 LINES GP-GREASE
AN ATTACHMENT

SMCS-7510 **i05949619**

NOTE	REF NO	GRAPHIC REF	PART NUMBER	QTY	PART NAME 1 2 3 4 5 6 (PRODUCT LEVEL)	SEE PAGE
	1	1	**117-7630**	24	FITTING-ADAPTER	
	2	1	**117-7631**	24	FITTING-COUPLING	
	3	1	**141-2785**	1	FITTING-ADAPTER	
	4	1	**141-2786**	2	FITTING-COUPLING	
	5	1	**307-2153**	1	TUBE AS	
	6	1	**340-0353**	1	VALVE GP-LUBE DISTRIBUTION (12-INJECTOR)	
		1	**135-2442**	12	FITTING	
		1	**135-2443**	12	RING	
		1	**141-2778**	1	FITTING-STRAIGHT	
D	7	1	**169-8324**		HOSE (0.4-M)	
D	8	1	**169-8323**		HOSE (0.98-M EACH)	
D	8A	1	**169-8323**		HOSE (0.52-M EACH)	
D	8B	1	**169-8323**		HOSE (0.37-M EACH)	
D	8C	1	**169-8323**		HOSE (1.6-M EACH)	
D	8D	1	**169-8323**		HOSE (1.72-M EACH)	
D	8E	1	**169-8323**		HOSE (0.56-M EACH)	

D - ORDER BY THE METER

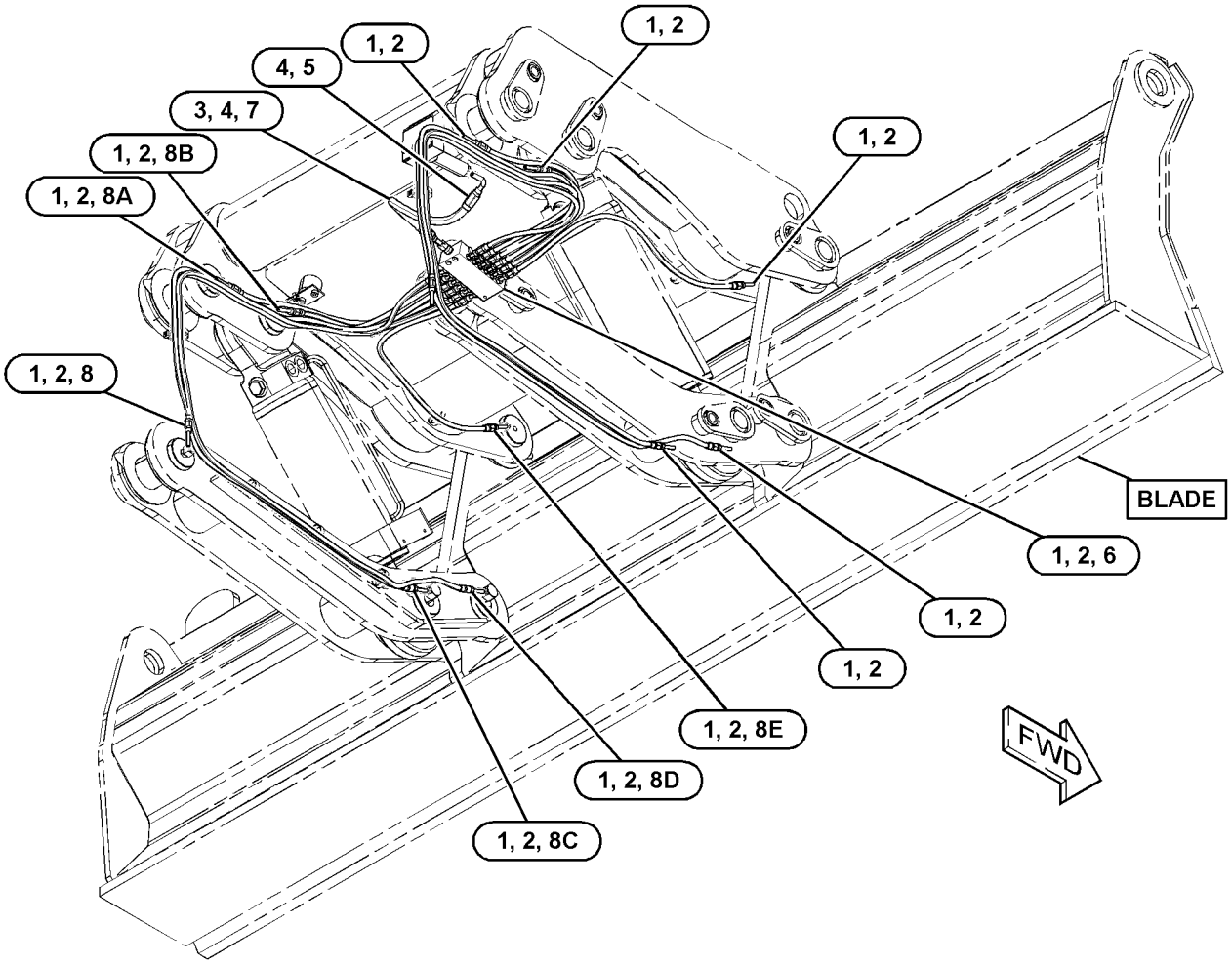

GRAPHIC #1 <END> g03743359

169-0701 LOCK GP-QUICK COUPLER—HYDRAULIC

S/N: CH91-UP

PART OF 174-2525 COUPLER AR-QUICK

AN ATTACHMENT

SMCS-6129 **i07834868**

NOTE	REF NO	GRAPHIC REF	PART NUMBER	QTY	PART NAME 1 2 3 4 5 6 (PRODUCT LEVEL)	SEE PAGE
	1	1	**169-0700**	1	WEDGE	
	2	1	**165-6005**	2	SHAFT	
	3	1	**165-6006**	2	SPRING	
	4	1	**165-6007**	2	RING	
M	5	1	**099-0169**	2	BOLT (M16X2X55-MM)	
	6	1	**167-7782**	2	PLATE	
	7	1	**168-8242**	2	RING	
M	8	1	**168-7790**	2	BOLT (M20X2.5X130-MM)	
	9	1	**169-0328**	2	SPACER (22X38X67-MM THK)	
	10	1	**9X-8257**	2	WASHER (17.5X30X3.5-MM THK)	
Y	11	1	**169-0329**	1	CYLINDER GP-COUPLER	360
	12	1	**8T-4223**	4	WASHER-HARD (13.5X25.5X3-MM THK)	
M	13	1	**8T-4183**	4	BOLT (M12X1.75X40-MM)	
M	14	1	**098-5747**	2	NUT (M16X2-THD)	
M	15	1	**095-0703**	1	BOLT-SOCKET HEAD (M16X2X75-MM)	

M - METRIC PART
Y - SEPARATE ILLUSTRATION

169-0701 **LOCK GP-QUICK COUPLER (**contd.**)** **i07834868**

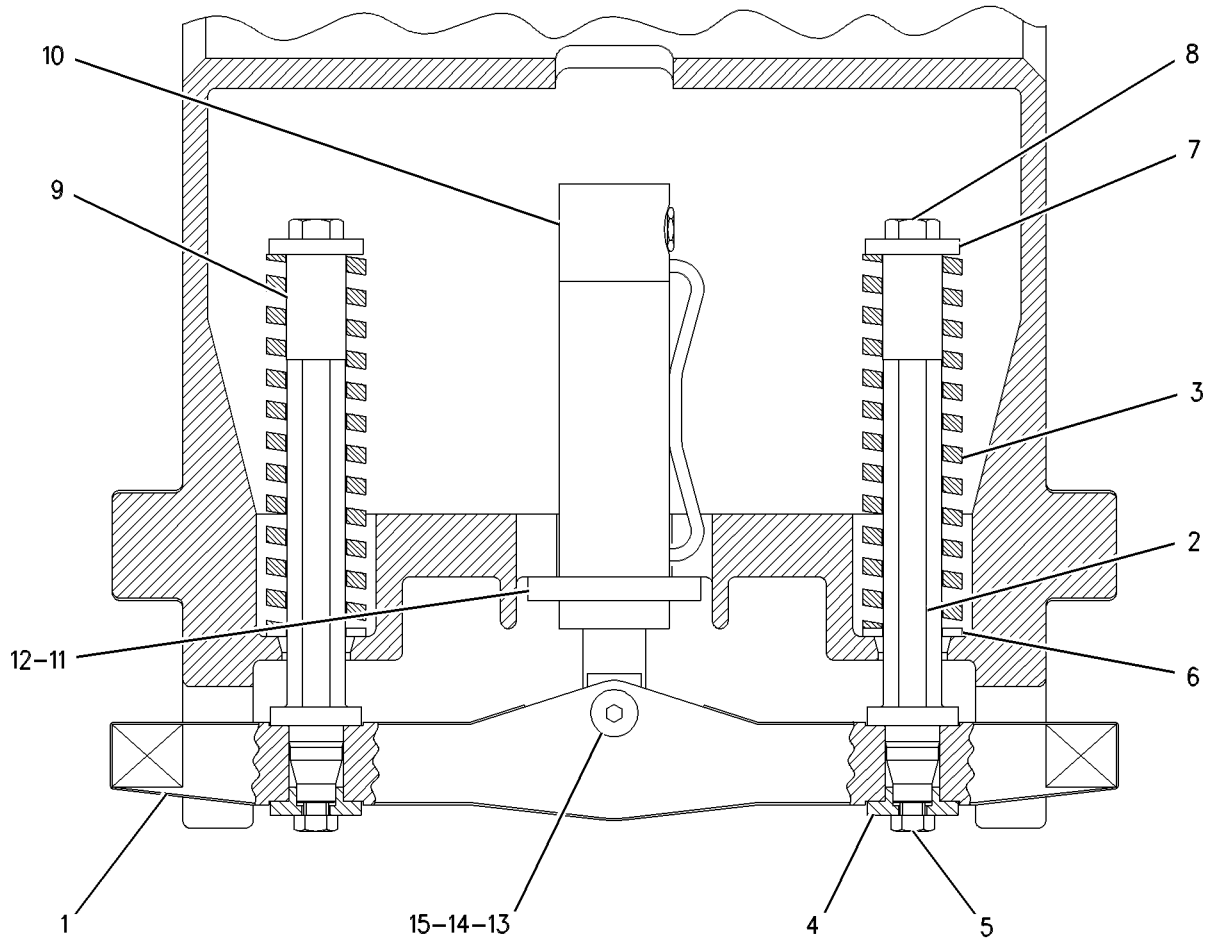

GRAPHIC #1 <END> g00554940

171-3689 LOCK GP-QUICK COUPLER—MECHANICAL

S/N: CH91-UP

PART OF 174-2526 COUPLER AR-QUICK

AN ATTACHMENT

SMCS-6129 **i05507711**

NOTE	REF NO	GRAPHIC REF	PART NUMBER	QTY	PART NAME 1 2 3 4 5 6 (PRODUCT LEVEL)	SEE PAGE
	1	1	**171-3691**	1	WEDGE	
	2	1	**171-3693**	1	SPINDLE	
	3	1	**171-3694**	1	SPINDLE AS	
	4	1	**171-3695**	1	RING	
	5	1	**235-0455**	2	CLAMP-HALF	
	6	1	**171-3697**	2	SHAFT	
	7	1	**165-6007**	2	RING	
M	8	1	**7X-2552**	2	BOLT (M16X2X30-MM)	
	9	1	**168-8242**	2	RING	
M	10	1	**8T-5460**	2	BOLT (M20X2.5X40-MM)	
	11	1	**095-0948**	2	FITTING-GREASE	
M	12	1	**8T-4183**	4	BOLT (M12X1.75X40-MM)	
	13	1	**174-6945**	2	BOLT-SPECIAL	
M	14	1	**151-6282**	2	BOLT-SOCKET HEAD (M6X1X40-MM)	
	15	1	**174-5159**	4	WASHER-SPRING	
	16	1	**171-3698**	2	RING	
	17	1	**171-3700**	1	PLATE AS	
	18	1	**095-1393**	1	CLAMP-HOSE	
	19	1	**171-4474**	1	COLLAR	
	20	1	**096-0433**	1	RING-RETAINING	
	21	1	**095-9785**	1	CLAMP-HOSE	
	22	1	**8T-4223**	4	WASHER-HARD (13.5X25.5X3-MM THK)	
M	23	1	**5C-2890**	2	NUT (M6X1-THD)	
M	24	1	**171-3702**	1	BOLT (M6X1X75-MM)	

M - METRIC PART

171-3689 **LOCK GP-QUICK COUPLER (**contd.**)** **i05507711**

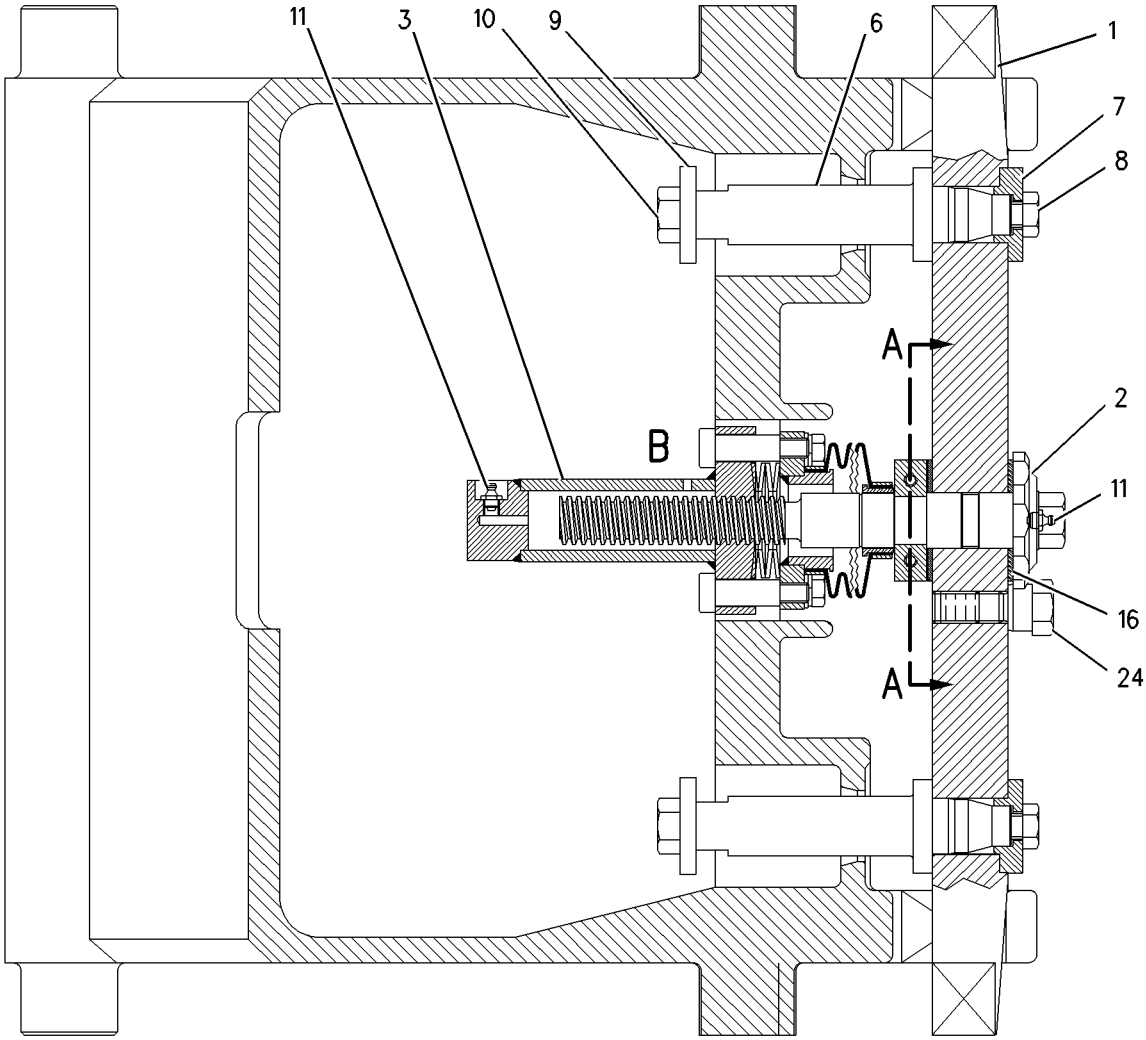

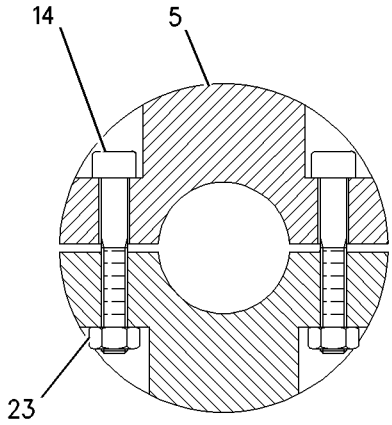

SECTION A-A

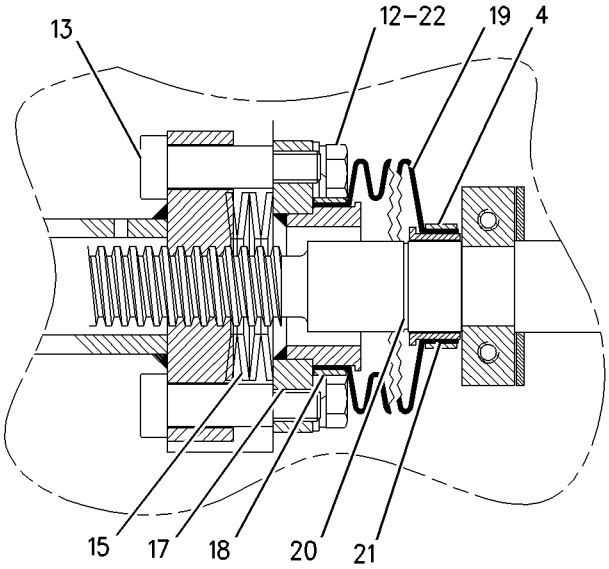

VIEW OF AREA B

GRAPHIC #1 <END> g00794073

123-4968 PIN GP-BUCKET

S/N: CH91-UP
FOR USE WITH ADJUSTABLE RETENTION BUCKETS ONLY
PART OF 453-8185 DISTRIBUTION AR
AN ATTACHMENT

SMCS-6108 **i05560609**

NOTE	REF NO	GRAPHIC REF	PART NUMBER	QTY	PART NAME 1 2 3 4 5 6 (PRODUCT LEVEL)	SEE PAGE
	1	1	**373-4195**	2	PIN	
M	2	1	**8T-4132**	4	NUT (M16X2-THD)	
M	3	1	**8T-6385**	2	BOLT (M16X2X180-MM)	

M - METRIC PART

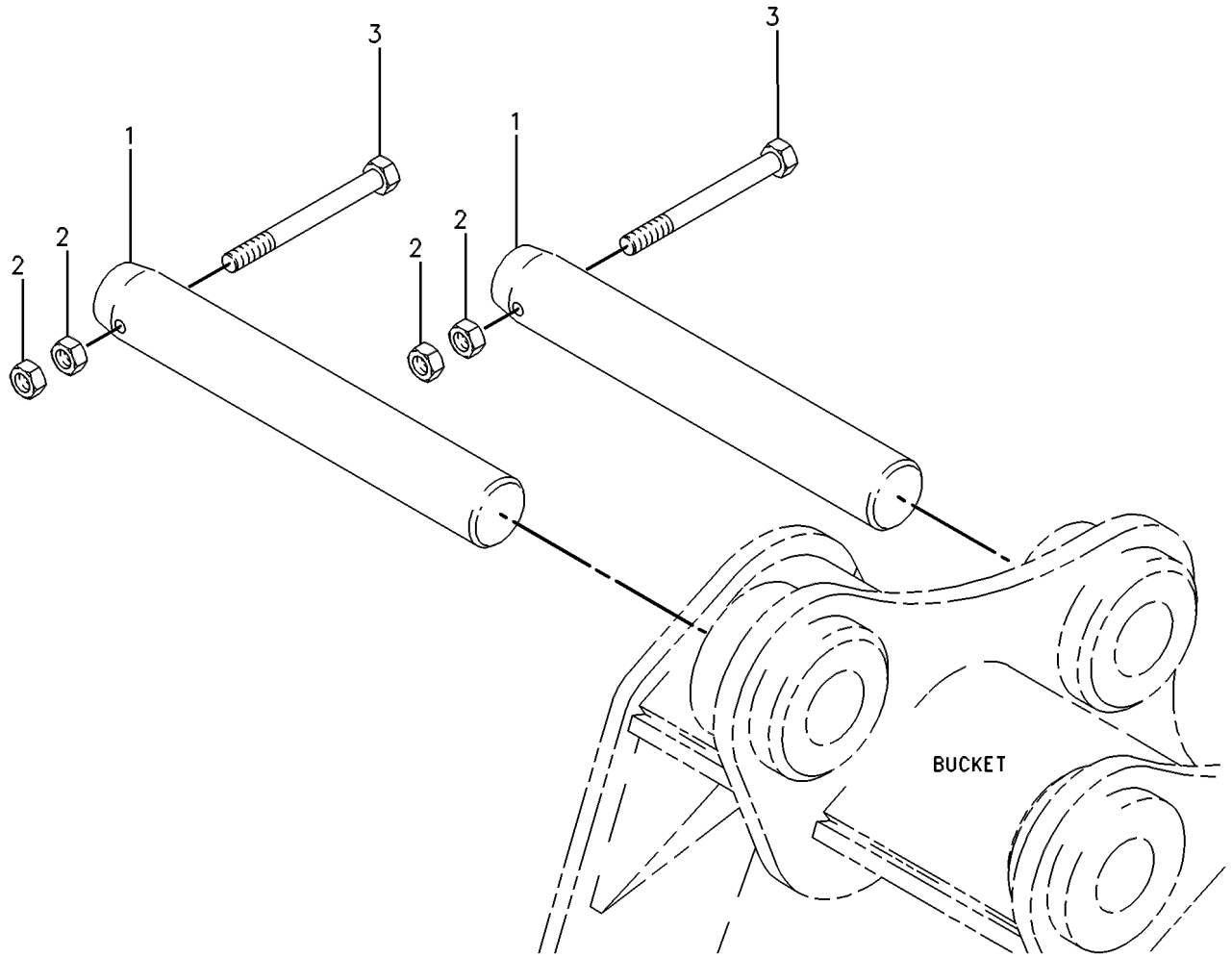

GRAPHIC #1 <END> g00251042

380-1204 SIDECUTTER GP

S/N: CH91-UP

PART OF 466-8140 BUCKET AR-GENERAL PURPOSE

AN ATTACHMENT

SMCS-6813 **i07042150**

NOTE	REF NO	GRAPHIC REF	PART NUMBER	QTY	PART NAME 1 2 3 4 5 6 (PRODUCT LEVEL)	SEE PAGE
	1	1	**357-2713**	1	SIDECUTTER (LH)	
	2	1	**357-2714**	1	SIDECUTTER (RH)	
M	3	1	**7X-0851**	8	NUT (M24X3-THD)	
M	4	1	**8T-0664**	8	BOLT (M24X3X70-MM)	

M - METRIC PART

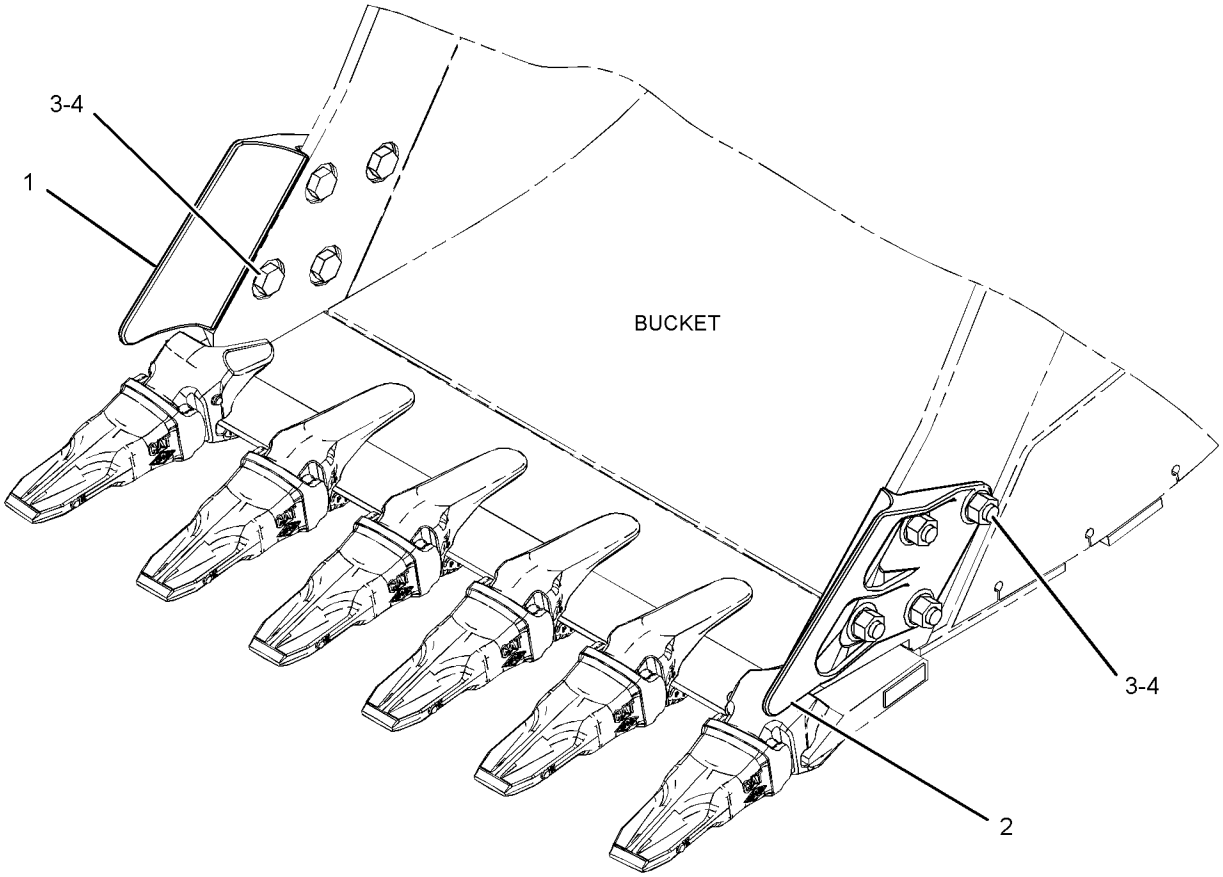

GRAPHIC #1 <END> g02719648

229-6964 TIP GP-EXTRA-DUTY

S/N: CH91-UP
K-80 ADAPTER SIZE
AN ATTACHMENT

SMCS-6805 **i05490534**

NOTE	PART NUMBER	QTY	PART NAME 1 2 3 4 5 6 (PRODUCT LEVEL)	SEE PAGE
	220-9090	1	RETAINER-G.E.T. (K-80, K-90, K-100)	
	220-9081	1	TIP-EXTRA-DUTY (K-80)	

<END>

229-6969 TIP GP-GENERAL PURPOSE–K-80

S/N: CH91-UP

AN ATTACHMENT

SMCS-6805 **i06165038**

NOTE	REF NO	GRAPHIC REF	PART NUMBER	QTY	PART NAME 1 2 3 4 5 6 (PRODUCT LEVEL)	SEE PAGE
	1	1	**475-5473**	1	TIP-BUCKET (K-80)	
	2	1	**220-9090**	1	RETAINER-G.E.T. (K-80, K-90, K-100)	

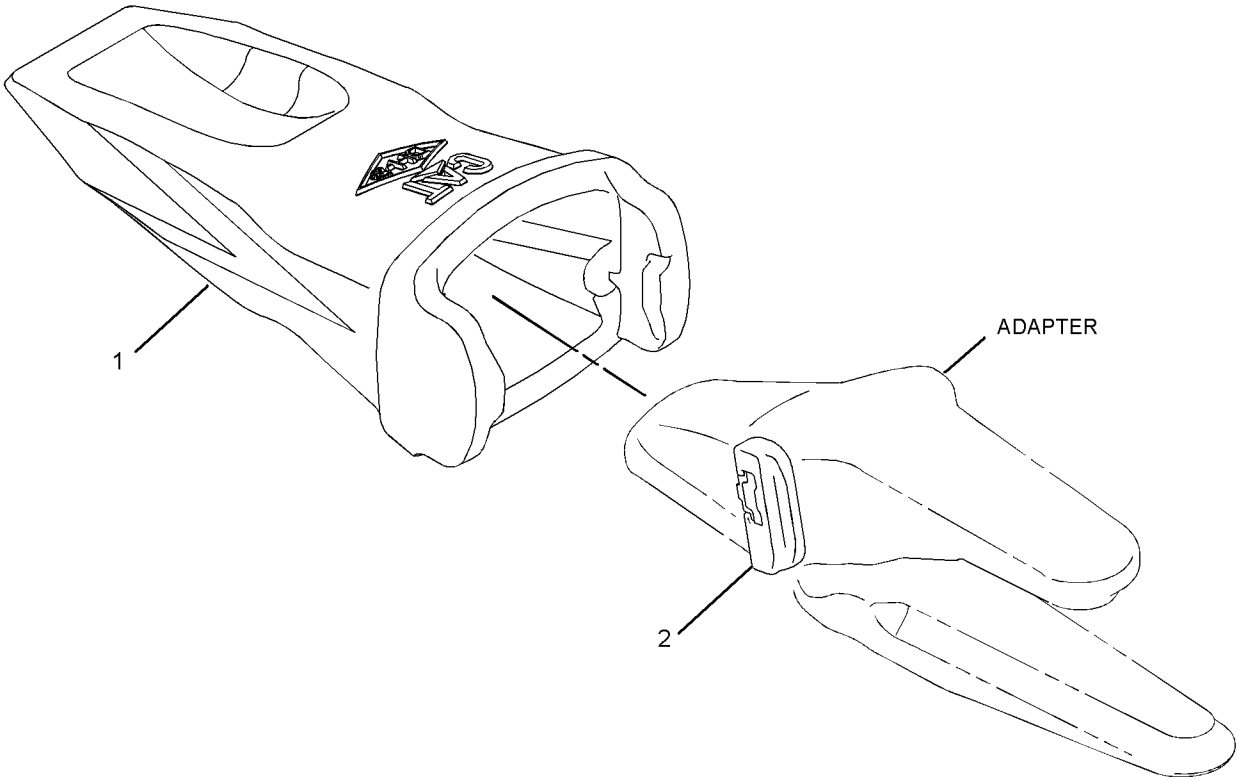

GRAPHIC #1 <END> g01275715

229-6965 TIP GP-PENETRATION–K-80

S/N: CH91-UP

AN ATTACHMENT

SMCS-6805 **i07081245**

NOTE	REF NO	GRAPHIC REF	PART NUMBER	QTY	PART NAME 1 2 3 4 5 6 (PRODUCT LEVEL)	SEE PAGE
	1	1	**475-5469**	1	TIP-PENETRATION (K-80)	
	2	1	**220-9090**	1	RETAINER-G.E.T. (K-80, K-90, K-100)	

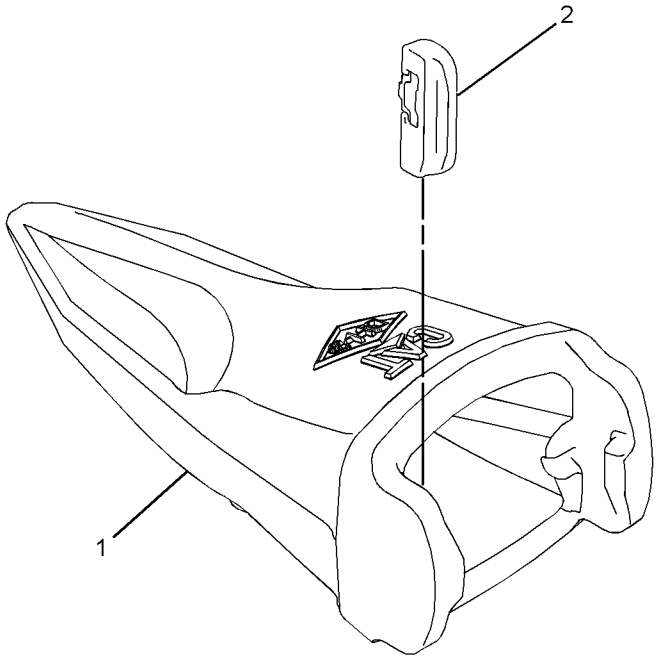

GRAPHIC #1 <END> g01276177

229-6966 TIP GP-PENETRATION PLUS—K-80

S/N: CH91-UP

AN ATTACHMENT

SMCS-6805 **i07408854**

NOTE	REF NO	GRAPHIC REF	PART NUMBER	QTY	PART NAME 1 2 3 4 5 6 (PRODUCT LEVEL)	SEE PAGE
	1	1	**220-9090**	1	RETAINER-G.E.T. (K-80, K-90, K-100)	
	2	1	**475-5470**	1	TIP-PENETRATION PLUS (K-80)	

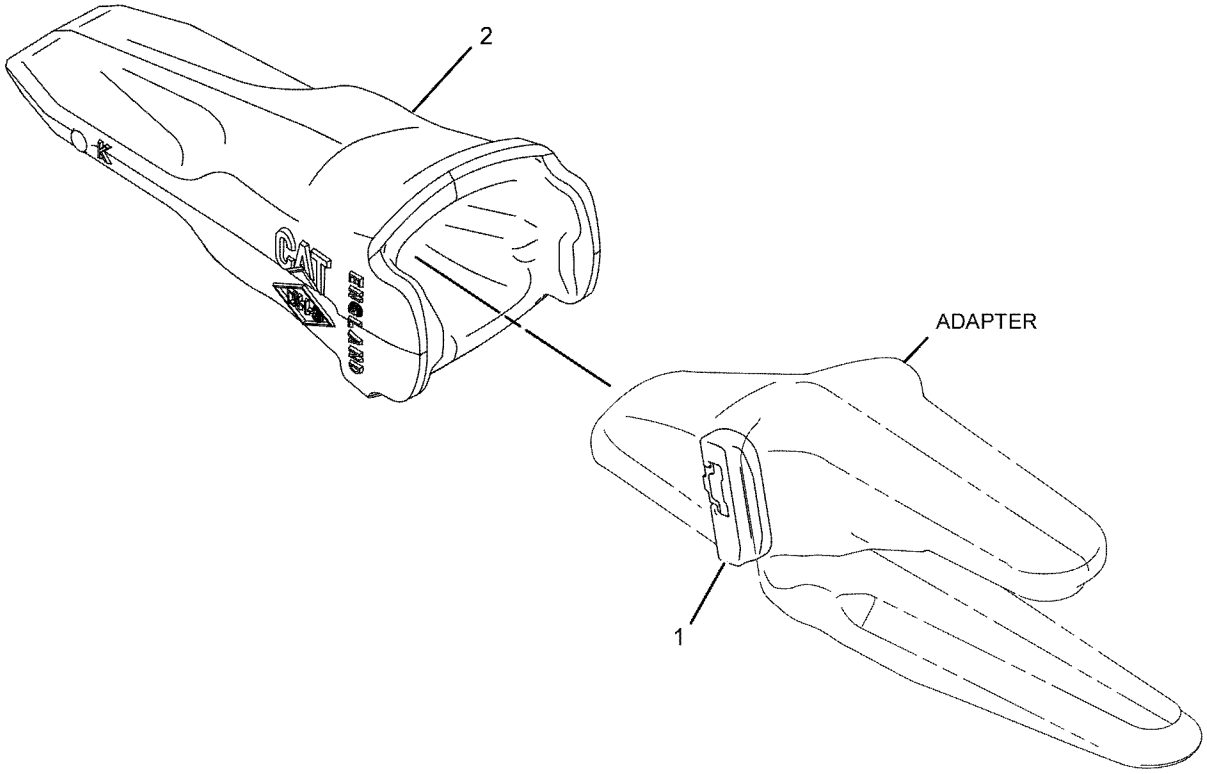

GRAPHIC #1 <END> g01074401

449-2161 TIP-LONG–J-350

S/N: E7A1-UP

FIELD INSTALLATION

SMCS-6805 **i06627960**

NOTE	REF NO	GRAPHIC REF	PART NUMBER	QTY	PART NAME 1 2 3 4 5 6 (PRODUCT LEVEL)	SEE PAGE
					(NO SERVICED PARTS)	

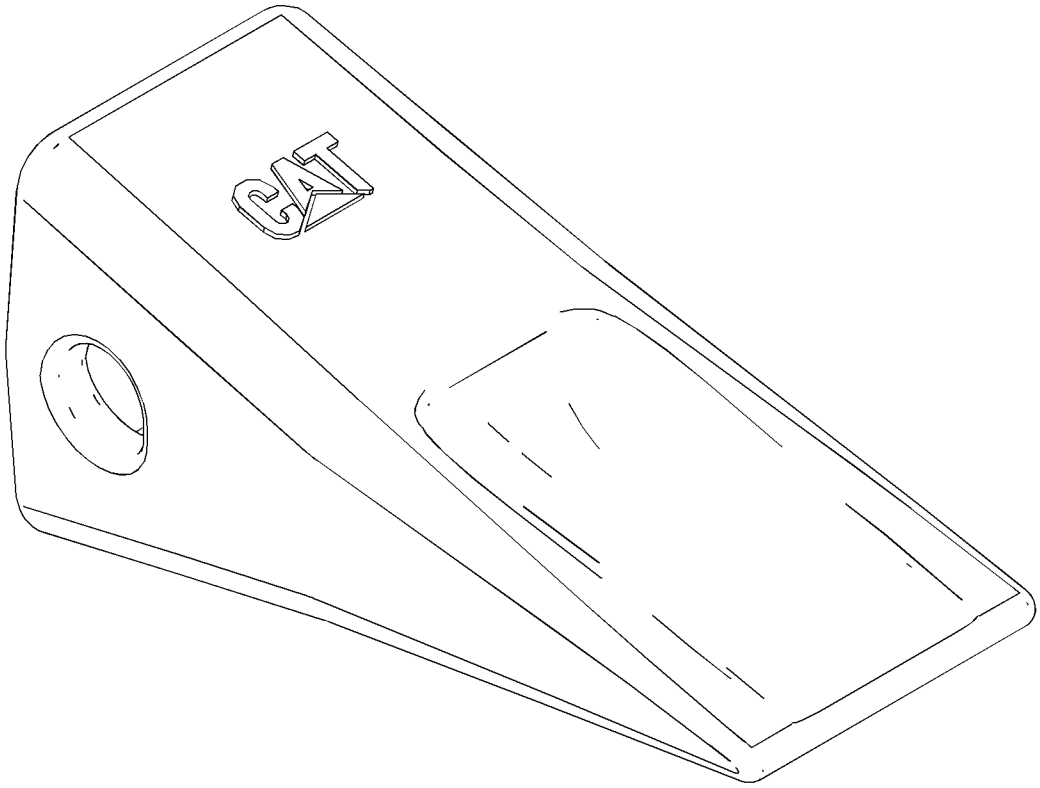

GRAPHIC #1 <END> g03850074

449-2162 TIP-LONG—J-350, HEAVY-DUTY

S/N: E7A1-UP

FIELD INSTALLATION

SMCS-6805 **i06858057**

NOTE	REF NO	GRAPHIC REF	PART NUMBER	QTY	PART NAME 1 2 3 4 5 6 (PRODUCT LEVEL)	SEE PAGE
					(NO SERVICED PARTS)	

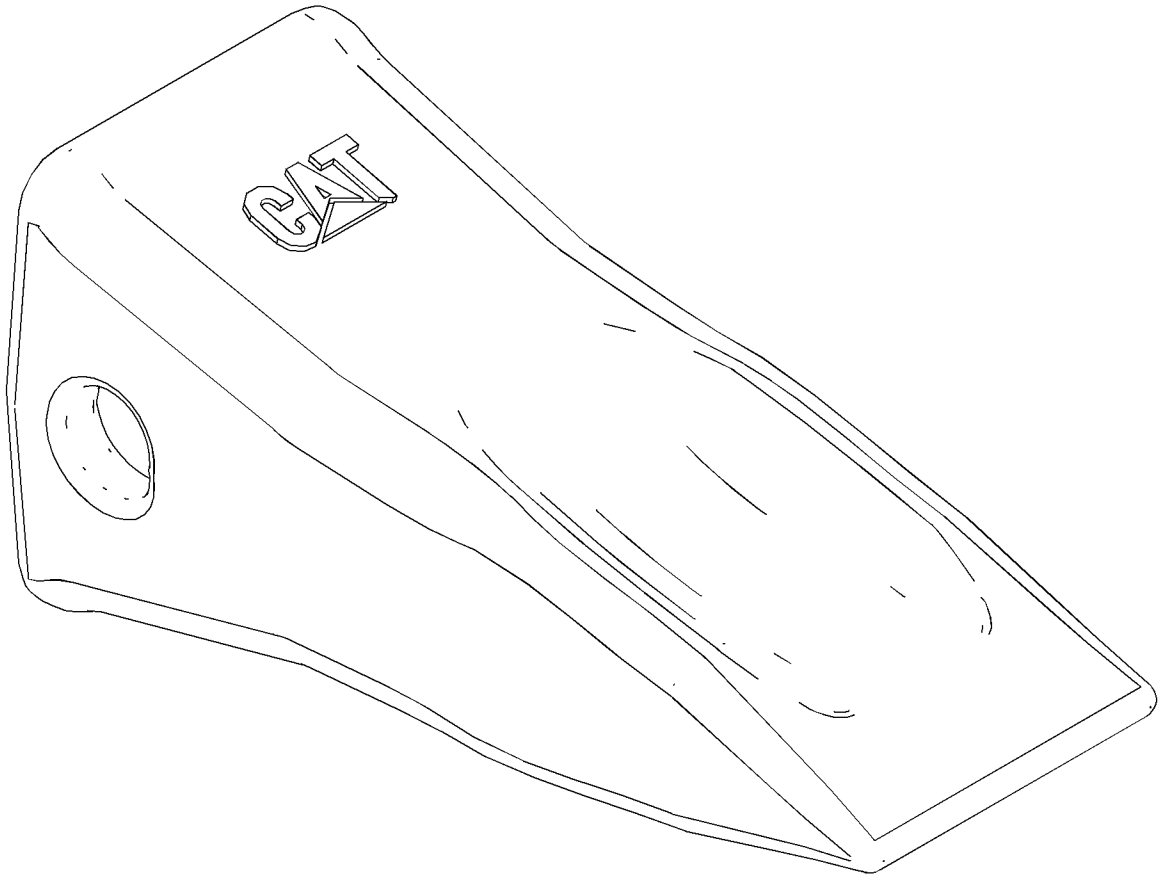

GRAPHIC #1 <END> g03850076

389-5743 TIP-PENETRATION—J-350, HEAVY-DUTY

S/N: E7A1-UP

FIELD INSTALLATION

SMCS-6805 **i06858074**

NOTE	REF NO	GRAPHIC REF	PART NUMBER	QTY	PART NAME 1 2 3 4 5 6 (PRODUCT LEVEL)	SEE PAGE
					(NO SERVICED PARTS)	

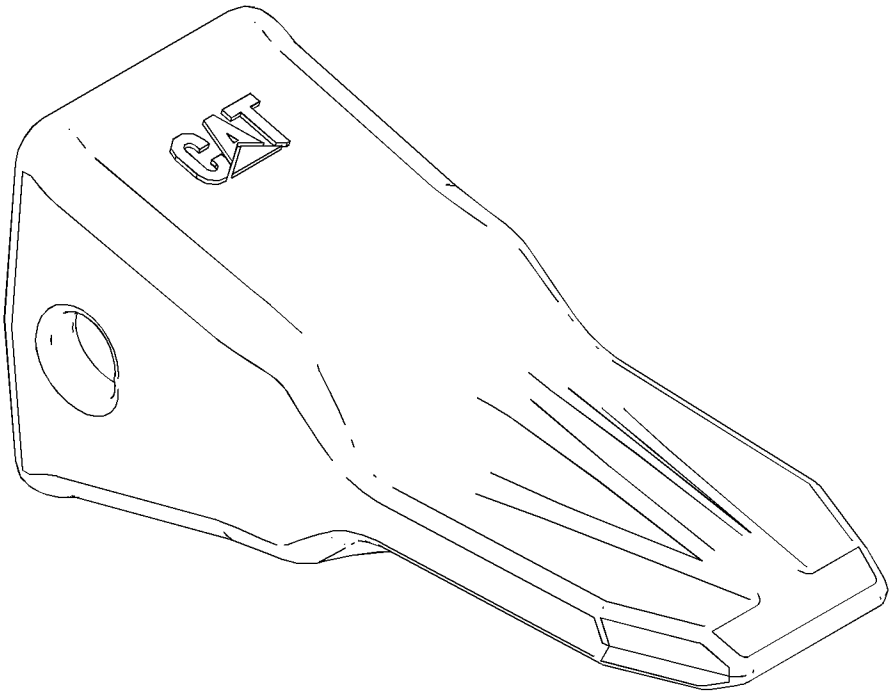

GRAPHIC #1 <END> g03850071

284-4656 AIR CONDITIONER & MOUNTING GP

S/N: CH91-UP
PART OF 396-6835 OPERATOR AR
ALSO AN ATTACHMENT

SMCS-7320 **i05558205**

NOTE	REF NO	GRAPHIC REF	PART NUMBER	QTY	PART NAME 1 2 3 4 5 6 (PRODUCT LEVEL)	SEE PAGE
	1	1	**235-8873**	1	HARNESS AS-HEATER & AIR COND (CONTROL PANEL SWITCHES)	
	2	1	**235-8874**	1	SENSOR-TEMPERATURE (AMBIENT AIR)	
	3	1	**235-8875**	1	BRACKET	
Y	4	1	**316-8916**	1	AIR CONDITIONER GP	800
	5	1	**284-4651**	1	HARNESS AS-WIRING (AIR CONDITIONER)	
	6	1	**293-1136**	1	PANEL AS-CONTROL	
	7	1	**3S-2093**	6	STRAP-CABLE	
	8	1	**9X-8256**	1	WASHER (6.6X12X2-MM THK)	
M	9	1	**099-2374**	2	BOLT-SOCKET HEAD (M5X0.8X12-MM)	
M	10	1	**5C-9553**	1	BOLT (M6X1X16-MM)	
	11	1	**7X-7729**	7	WASHER (11X25X3-MM THK)	
	12	1	**8T-0328**	2	WASHER-HARD (5.5X10X1-MM THK)	
M	13	1	**8T-4136**	7	BOLT (M10X1.5X25-MM)	

M - METRIC PART
Y - SEPARATE ILLUSTRATION

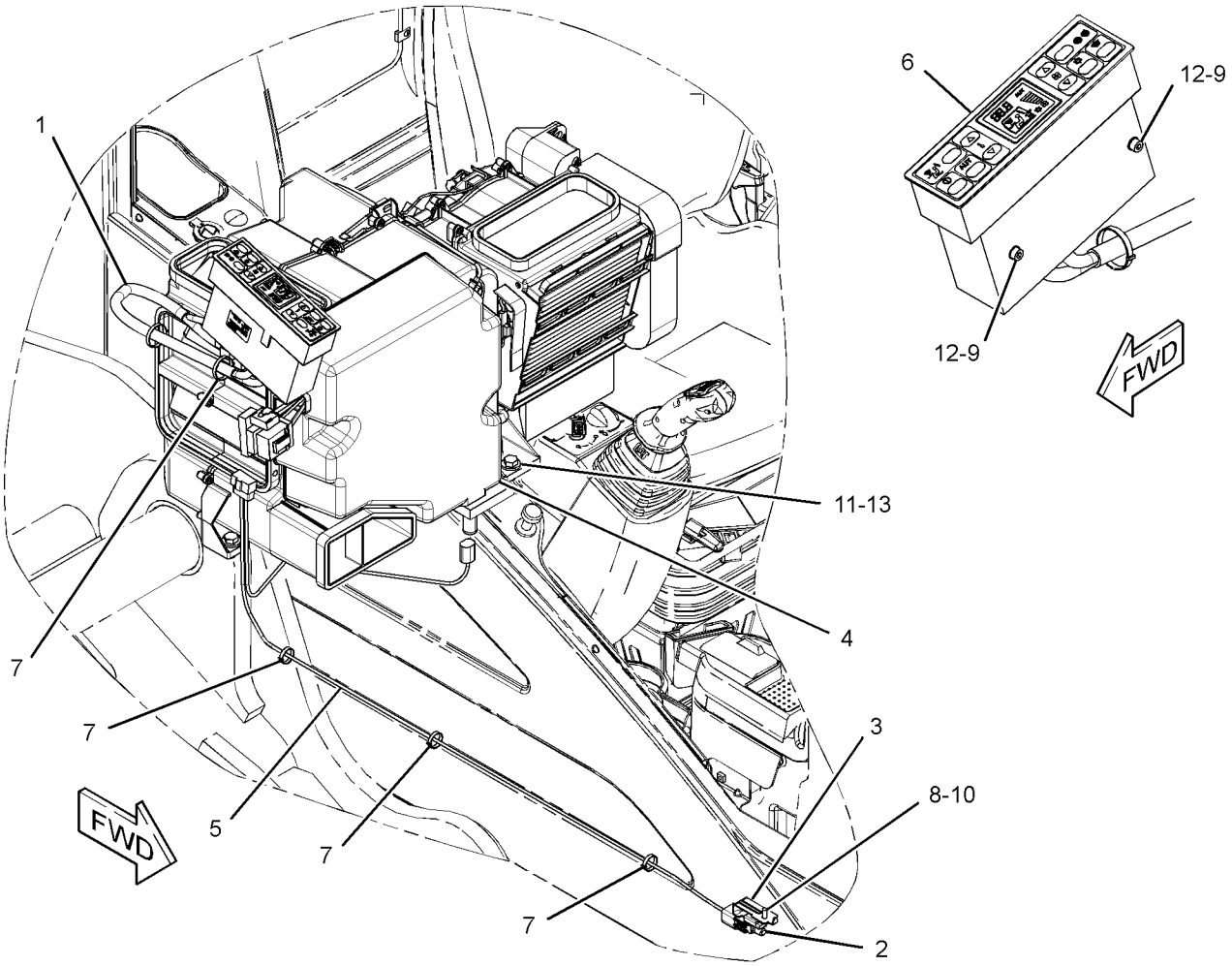

GRAPHIC #1 <END> g01589992

466-9070 AIR CONDITIONER AR

S/N: CH91-UP
PART OF 449-2824 CHASSIS AR
ALSO AN ATTACHMENT

SMCS-7320 **i06267058**

NOTE	PART NUMBER	QTY	PART NAME 1 2 3 4 5 6 (PRODUCT LEVEL)	SEE PAGE
Y	*466-9071*	1	COMPRESSOR GP-REFRIGERANT	808
Y	*253-9841*	1	CONDENSER & MTG GP-REFRIGERANT	813
Y	*250-9616*	1	LINES GP-AIR CONDITIONER	857
Y	*250-9615*	1	LINES GP-HEATER	859

Y - SEPARATE ILLUSTRATION

<END>

466-9093 AIR CONDITIONER AR

S/N: CH91-UP
PART OF 449-2824 CHASSIS AR

SMCS-7320 **i06125838**

NOTE	PART NUMBER	QTY	PART NAME 1 2 3 4 5 6 (PRODUCT LEVEL)	SEE PAGE
Y	*466-9092*	1	COMPRESSOR GP-REFRIGERANT	810
Y	*253-9841*	1	CONDENSER & MTG GP-REFRIGERANT	813
Y	*250-9616*	1	LINES GP-AIR CONDITIONER	857
Y	*250-9615*	1	LINES GP-HEATER	859

Y - SEPARATE ILLUSTRATION

<END>

316-8916 AIR CONDITIONER GP

S/N: CH91-UP

PART OF 284-4656 AIR CONDITIONER & MOUNTING GP

ALSO AN ATTACHMENT

SMCS-7320 **i07408245**

NOTE	REF NO	GRAPHIC REF	PART NUMBER	QTY	PART NAME 1 2 3 4 5 6 (PRODUCT LEVEL)	SEE PAGE
	1	1	**185-8300**	35	SCREW-TAPPING	
	2	1	**185-8302**	3	SCREW-TAPPING	
	3	1	**245-7817**	2	MOTOR AS	
	4	1	**245-7818**	3	CLIP	
	5	1	**245-7819**	2	CLIP	
	6	1	**245-7820**	1	COVER-FRONT	
	7	1	**245-7825**	1	INSULATOR	
	8	1	**245-7826**	1	INSULATOR	
	9	1	**245-7827**	1	INSULATOR	
	10	1	**245-7828**	1	INSULATOR	
	11	1	**245-7829**	1	PACKING	
	12	1	**245-7830**	1	CLIP	
	13	1	**245-7831**	1	SENSOR AS-TEMPERATURE (COOLANT)	
	14	1	**452-5528**	1	CONTROL AS	
	15	1	**245-7833**	1	CORE AS-HEATER	
	16	1	**245-7834**	1	DAMPER AS	
	17	1	**245-7835**	1	SENSOR AS-TEMPERATURE (AMBIENT AIR TEMP)	
Y	18	1	**353-2151**	1	COIL GP-EVAPORATOR	805
	19	1	**245-7838**	1	PACKING	
	20	1	**245-7839**	1	MOTOR AS (WITH FAN)	
Y	21	1	**245-7846**	1	CONTROL GP-HEAT & AIR COND (AIR INLET)	824
	22	1	**245-7847**	1	HARNESS AS-HEATER & AIR COND	
	23	1	**245-7856**	3	SCREW-TAPPING	
	24	1	**293-1137**	1	FILTER AS-AIR (AIR CONDITIONER)	
		1	**245-7823**	1	FILTER ELEMENT-CAB AIR	
		1	**245-7824**	1	PACKING	
	25	1	**316-8846**	1	PLATE	
	26	1	**316-8847**	2	ROD	
	27	1	**316-8849**	1	ROD	
	28	1	**316-8918**	1	PLATE	
	29	1	**316-8920**	1	ROD	
	30	1	**316-8921**	1	ROD	

Y - SEPARATE ILLUSTRATION

316-8916 **AIR CONDITIONER GP** (contd.) **i07408245**

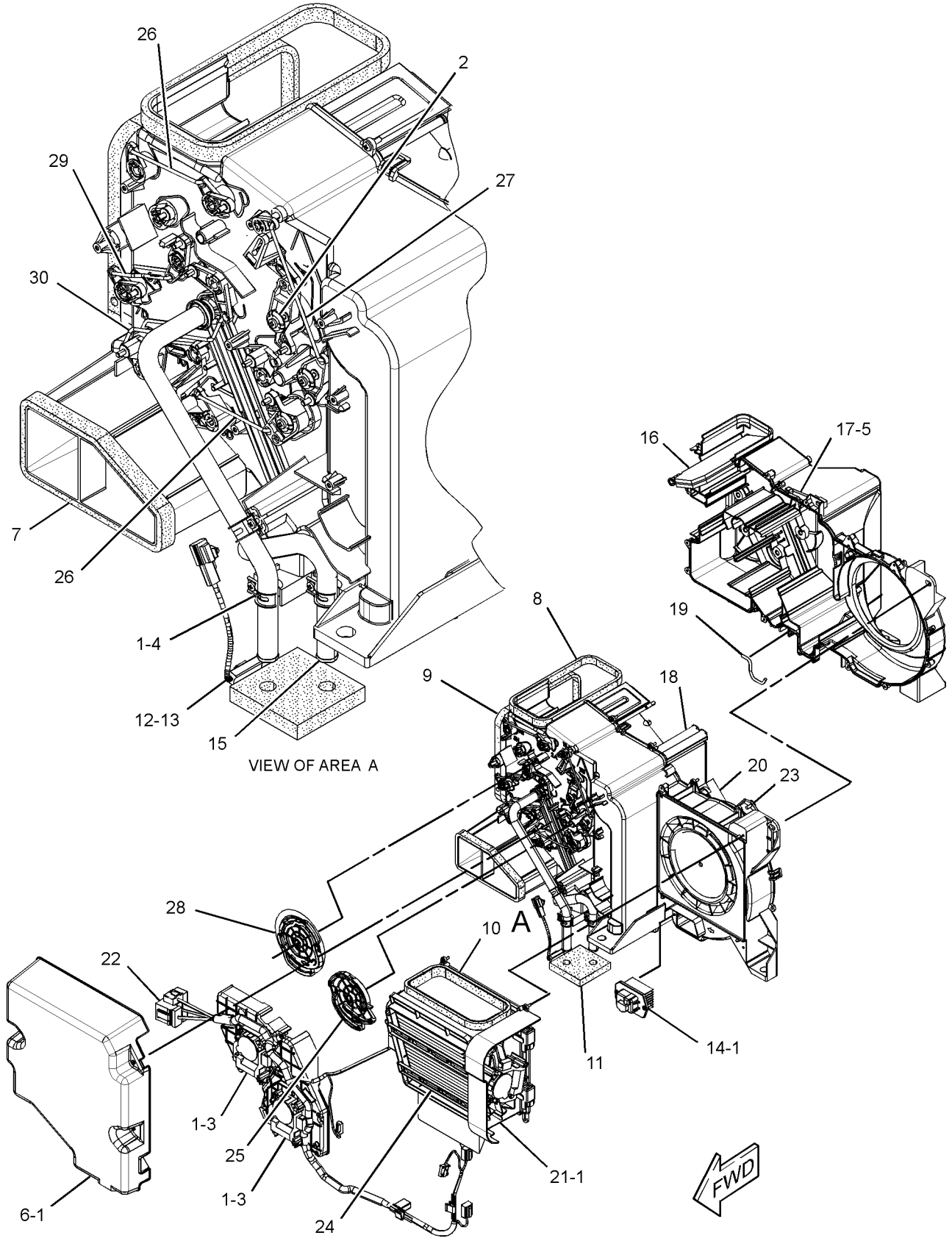

GRAPHIC #1 <END> g01788009

260-5085 ARMREST GP–LH

S/N: CH91-UP
PART OF 257-7619 CONSOLE GP-OPERATOR
ALSO AN ATTACHMENT

SMCS-7307 **i05513089**

NOTE	REF NO	GRAPHIC REF	PART NUMBER	QTY	PART NAME 1 2 3 4 5 6 (PRODUCT LEVEL)	SEE PAGE
	1	1	**205-6218**	1	BOLT-SPECIAL	
	2	1	**210-1331**	1	ARMREST GP	
	3	1	**260-9297**	1	BRACKET AS	

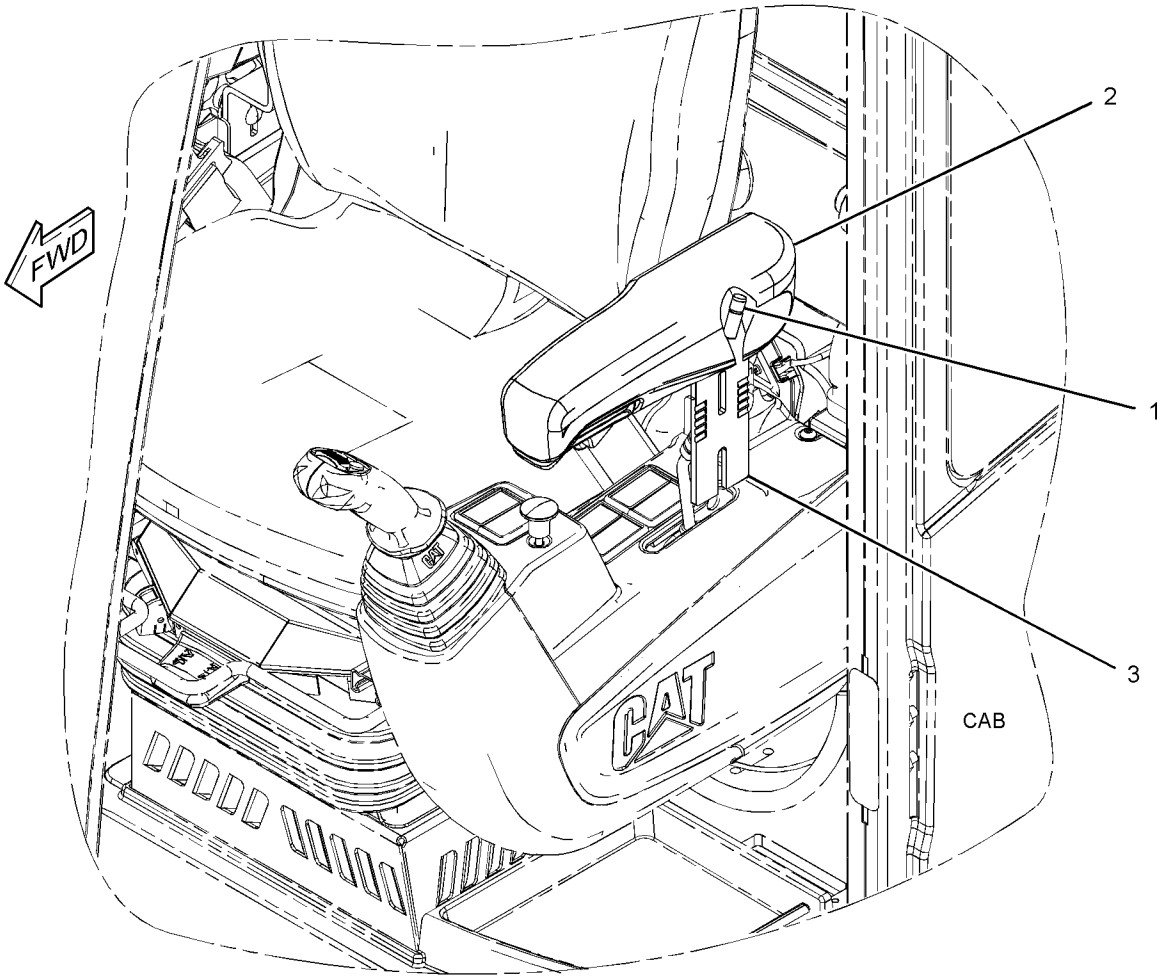

GRAPHIC #1 <END> g01323341

260-5108 ARMREST GP–RH

S/N: CH91-UP
PART OF 350-8547 CONSOLE GP-OPERATOR
ALSO AN ATTACHMENT

SMCS-7307 **i05510309**

NOTE	REF NO	GRAPHIC REF	PART NUMBER	QTY	PART NAME 1 2 3 4 5 6 (PRODUCT LEVEL)	SEE PAGE
	1	1	**205-6218**	1	BOLT-SPECIAL	
	2	1	**205-6219**	1	ARMREST GP	
	3	1	**260-9280**	1	BRACKET AS	

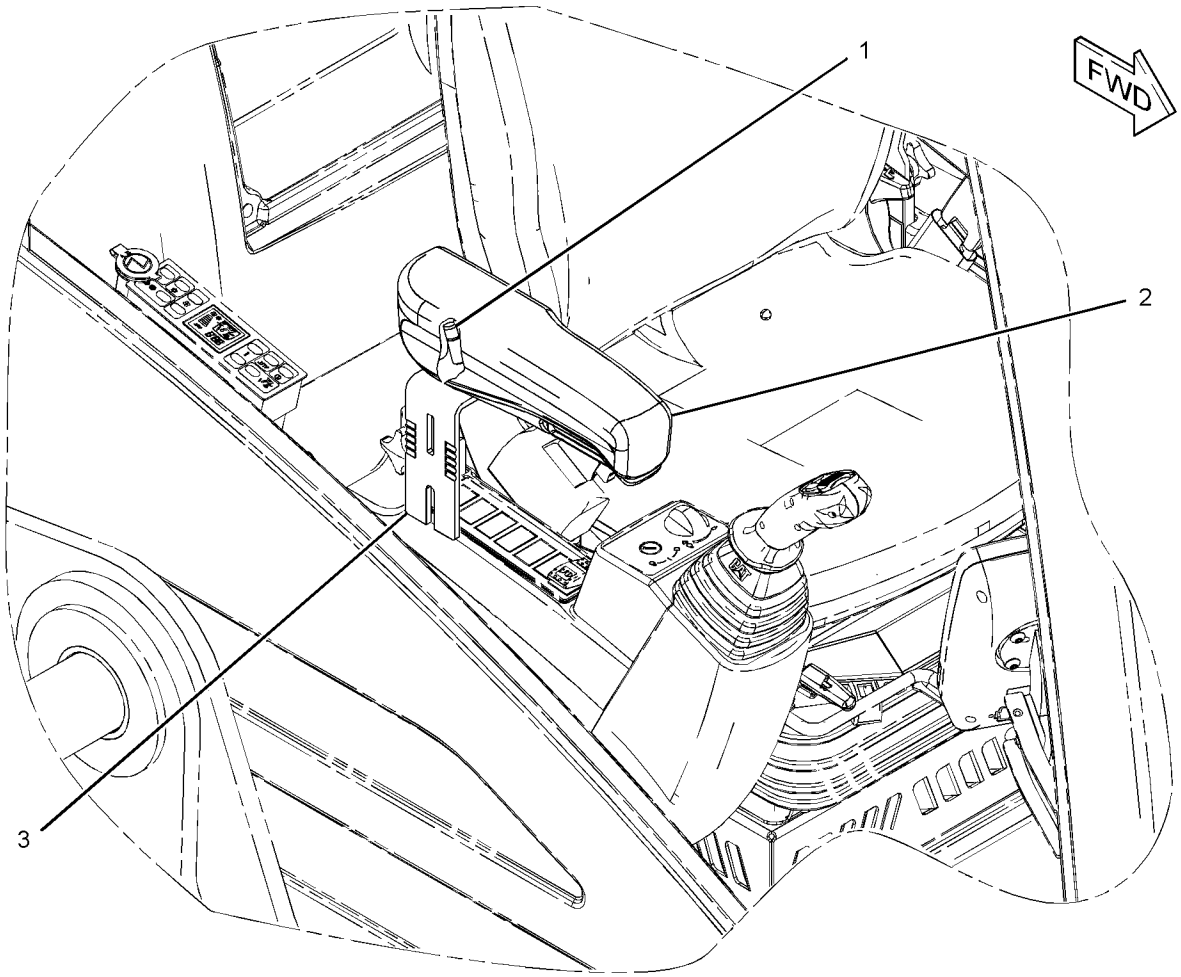

GRAPHIC #1 <END> g01323227

396-6834 CAB AR

S/N: CH91-UP
PART OF 449-2823 COMMON AR
ALSO AN ATTACHMENT

SMCS-7301, 7325 **i05554033**

NOTE	PART NUMBER	QTY	PART NAME 1 2 3 4 5 6 (PRODUCT LEVEL)	SEE PAGE
Y	*426-2270*	1	CAB GP	804
Y	*431-9097*	1	ELECTRICAL AR	125
Y	*448-9499*	1	LIGHTING GP-FLOOD	170
Y	*396-6835*	1	OPERATOR AR	866
Y	*433-1658*	1	WIPER GP-WINDOW	905

Y - SEPARATE ILLUSTRATION

<END>

453-8180 CAB AR

S/N: CH91-UP
PART OF 453-8185, 473-2841, 517-3262 DISTRIBUTION AR
AN ATTACHMENT

SMCS-7301, 7325 **i05927590**

NOTE	PART NUMBER	QTY	PART NAME 1 2 3 4 5 6 (PRODUCT LEVEL)	SEE PAGE
Y	*250-9621*	1	CONTROL GP-PEDAL (TRAVEL)	837
Y	**452-6951**	1	SEAT GP-SUSPENSION	879

Y - SEPARATE ILLUSTRATION

<END>

426-2270 CAB GP

S/N: CH91-UP
PART OF 396-6834 CAB AR
ALSO AN ATTACHMENT

SMCS-7301, 7325 **i05496650**

NOTE	PART NUMBER	QTY	PART NAME 1 2 3 4 5 6 (PRODUCT LEVEL)	SEE PAGE
Y	*427-8448*	1	DOOR GP-CAB	843
Y	*427-8462*	1	SCREEN GP-SUN	875
Y	*426-2267*	1	TRIM GP-CAB (EXTERIOR)	889
Y	*426-2268*	1	TRIM GP-CAB (INTERIOR, REAR)	892
Y	*426-2269*	1	TRIM GP-CAB (INTERIOR, FRONT)	894
Y	*427-8445*	1	VISOR GP-CAB	896
Y	*426-2265*	1	WINDOW GP-CAB (SIDE, REAR)	899
Y	*426-2266*	1	WINDOW GP-CAB (FRONT, UPPER)	900
	426-2237	1	CAB AS	
	276-2336	1	FILM-INSTRUCTION (STEERING WHEEL TILT CONTROL)	
			(ON TOP, RIGHT CORNER ON WINDSHIELD)	

Y - SEPARATE ILLUSTRATION

<END>

353-2151 COIL GP-EVAPORATOR

S/N: CH91-UP

PART OF 316-8916 AIR CONDITIONER GP

ALSO AN ATTACHMENT

SMCS-7343 **i06194800**

NOTE	REF NO	GRAPHIC REF	PART NUMBER	QTY	PART NAME 1 2 3 4 5 6 (PRODUCT LEVEL)	SEE PAGE
	1	1	**245-7837**	1	VALVE AS-EXPANSION	
	2	1	**245-7905**	1	INSULATOR	
M	3	1	**281-0791**	2	BOLT-SOCKET HEAD (M5X0.8X40-MM)	
	4	1	**121-7136**	1	SEAL-O-RING	
	5	1	**121-7137**	1	SEAL-O-RING	

M - METRIC PART

353-2151 **COIL GP-EVAPORATOR (**contd.**)** **i06194800**

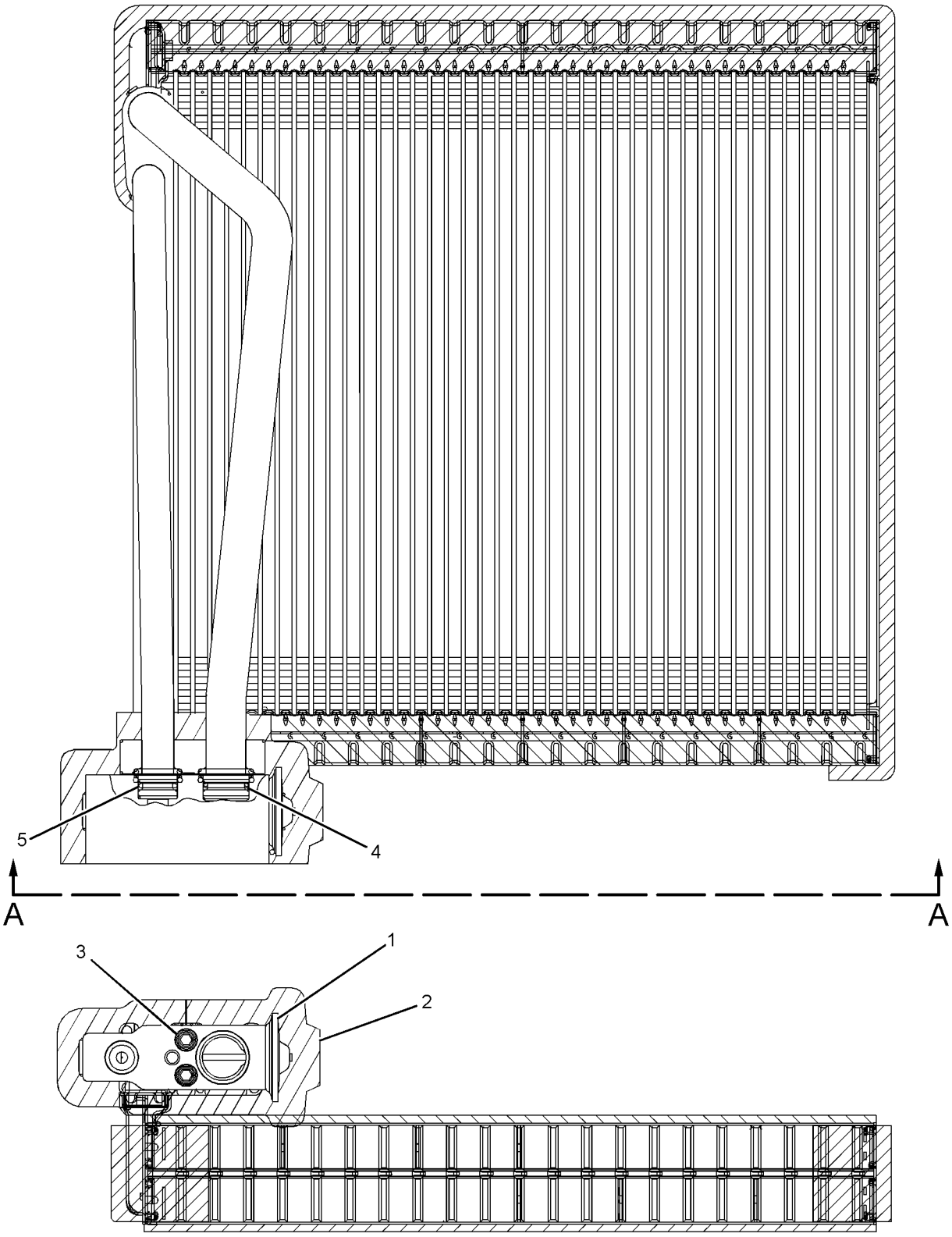

VIEW A-A

GRAPHIC #1 <END> g02150001

318-4258 COMPRESSOR GP-REFRIGERANT

S/N: CH91-UP

PART OF 466-9092 COMPRESSOR GP-REFRIGERANT

SMCS-1802 **i05558130**

NOTE	REF NO	GRAPHIC REF	PART NUMBER	QTY	PART NAME 1 2 3 4 5 6 (PRODUCT LEVEL)	SEE PAGE
	1	1	**180-9339**	2	PIN-CONNECTOR (14-GA TO 18-GA)	
	2	1	**314-4018**	1	VALVE AS-PRESSURE RELIEF (REFRIGERANT)	
	3	1	**7T-4532**	1	PLUG AS	
	4	1	**9X-7385**	2	SEAL-O-RING	
	5	1	**102-8802**	1	KIT-RECEPTACLE (2-PIN)	
					(INCLUDES RECEPTACLE AS & WEDGE)	

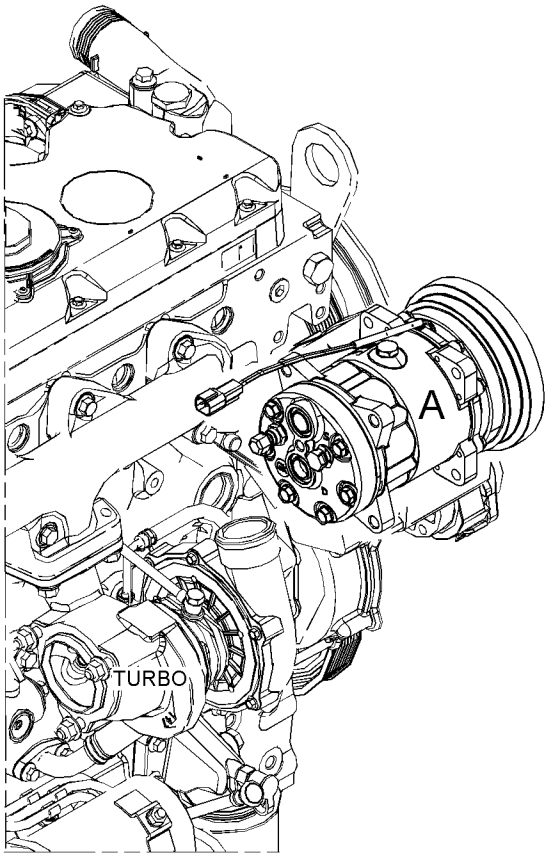

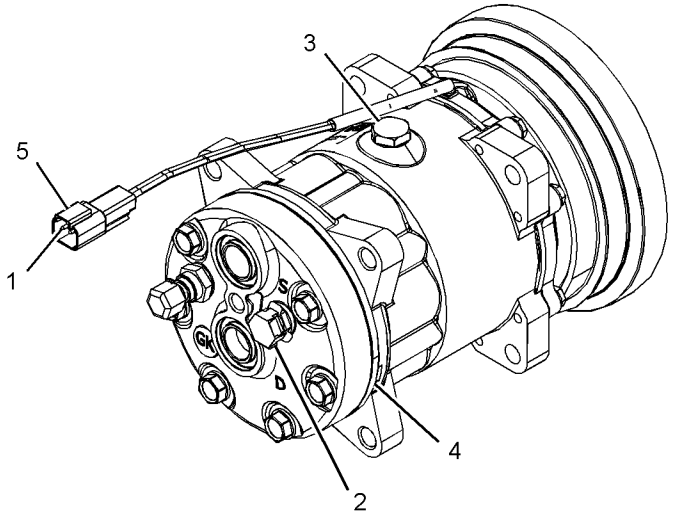

VIEW OF AREA A

GRAPHIC #1 <END> g03418224

466-9071 COMPRESSOR GP-REFRIGERANT

S/N: CH91-UP
PART OF 466-9070 AIR CONDITIONER AR
ALSO AN ATTACHMENT

SMCS-1802 **i06558880**

NOTE	REF NO	GRAPHIC REF	PART NUMBER	QTY	PART NAME 1 2 3 4 5 6 (PRODUCT LEVEL)	SEE PAGE
	1	1	**1P-6356**	1	PLATE	
	2	1	**168-6666**	2	PLATE	
	3	1	**169-5660**	1	STRAP AS	
	4	1	**171-7566**	1	BRACKET AS	
B	5	1	**172-3565**	1	SHIM (0.2-MM THK)	
	6	1	**189-3158**	1	SUPPRESSOR-ARC	
	7	1	**333-9780**	1	COVER AS	
	8	1	**466-9072**	1	V-BELT (REFRIGERANT COMPRESSOR)	
Y	9	1	**469-6441**	1	COMPRESSOR GP-REFRIGERANT	812
M	10	1	**105-3484**	4	BOLT-SOCKET HEAD (M10X1.5X25-MM)	
M	11	1	**107-2724**	1	BOLT-SOCKET HEAD (M12X1.75X100-MM)	
	12	1	**7X-0623**	12	WASHER (10.5X21X2-MM THK)	
M	13	1	**8T-0389**	1	LOCKNUT (M10X1.5-THD)	
M	14	1	**8T-4185**	1	BOLT (M10X1.5X50-MM)	
M	15	1	**8T-4195**	5	BOLT (M10X1.5X30-MM)	
M	16	1	**8T-5005**	1	BOLT (M10X1.5X70-MM)	
M	17	1	**8T-5436**	1	BOLT (M10X1.5X130-MM)	
M	18	1	**8T-8549**	1	LOCKNUT (M12X1.75-THD)	

B - USE AS REQUIRED
M - METRIC PART
Y - SEPARATE ILLUSTRATION

466-9071 **COMPRESSOR GP-REFRIGERANT (**contd.**)** **i06558880**

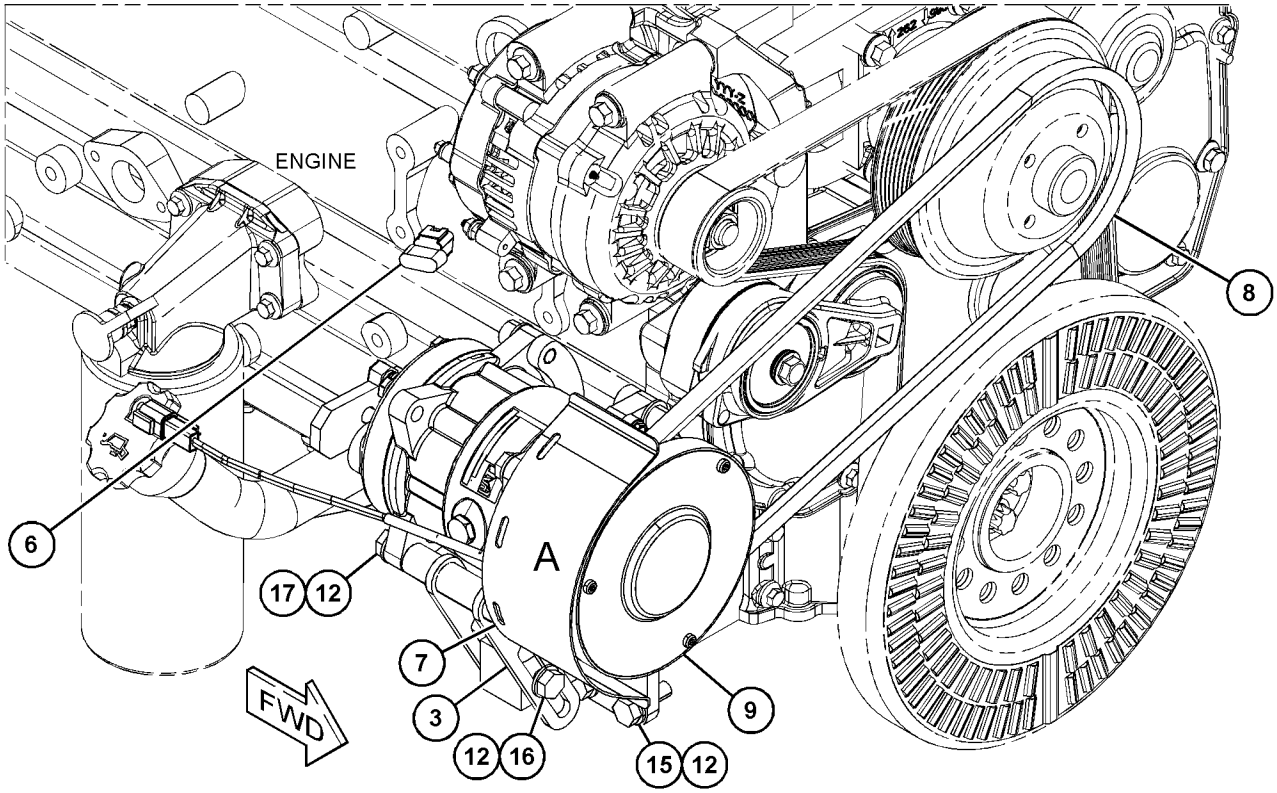

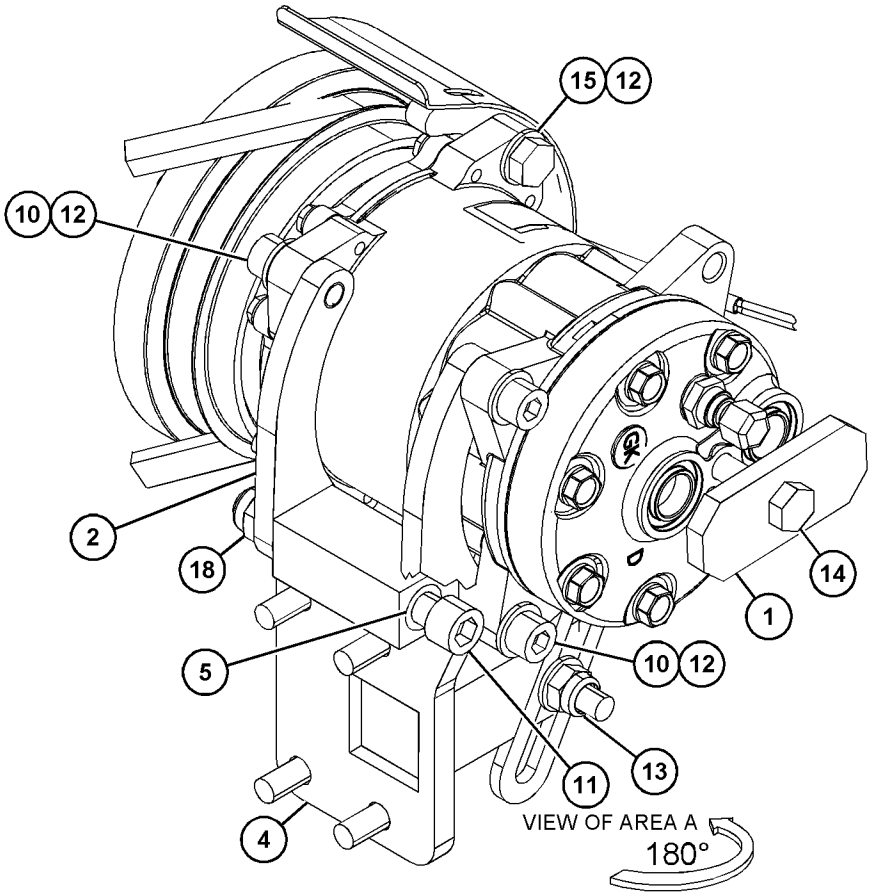

GRAPHIC #1 <END> g03873264

466-9092 COMPRESSOR GP-REFRIGERANT

S/N: CH91-UP

PART OF 466-9093 AIR CONDITIONER AR

SMCS-1802 **i06125839**

NOTE	REF NO	GRAPHIC REF	PART NUMBER	QTY	PART NAME 1 2 3 4 5 6 (PRODUCT LEVEL)	SEE PAGE
	1	1	**1P-6356**	1	PLATE	
	2	1	**130-3881**	1	PULLEY-FAN	
	3	1	**168-6666**	2	PLATE	
	4	1	**169-5660**	1	STRAP AS	
B	5	1	**172-3565**	1	SHIM (0.2-MM THK)	
	6	1	**171-7566**	1	BRACKET AS	
	7	1	**189-3158**	1	SUPPRESSOR-ARC	
	8	1	**275-4909**	1	V-BELT (COMPRESSOR)	
Y	9	1	**318-4258**	1	COMPRESSOR GP-REFRIGERANT	807
	10	1	**333-9780**	1	COVER AS	
M	11	1	**105-3484**	4	BOLT-SOCKET HEAD (M10X1.5X25-MM)	
M	12	1	**107-2724**	1	BOLT-SOCKET HEAD (M12X1.75X100-MM)	
	13	1	**7X-0623**	12	WASHER (10.5X21X2-MM THK)	
M	14	1	**8T-0389**	1	LOCKNUT (M10X1.5-THD)	
M	15	1	**8T-4185**	1	BOLT (M10X1.5X50-MM)	
M	16	1	**8T-4195**	5	BOLT (M10X1.5X30-MM)	
M	17	1	**8T-5005**	1	BOLT (M10X1.5X70-MM)	
M	18	1	**8T-5436**	1	BOLT (M10X1.5X130-MM)	
M	19	1	**8T-8549**	1	LOCKNUT (M12X1.75-THD)	

B - USE AS REQUIRED
M - METRIC PART
Y - SEPARATE ILLUSTRATION

466-9092 **COMPRESSOR GP-REFRIGERANT (**contd.**)** **i06125839**

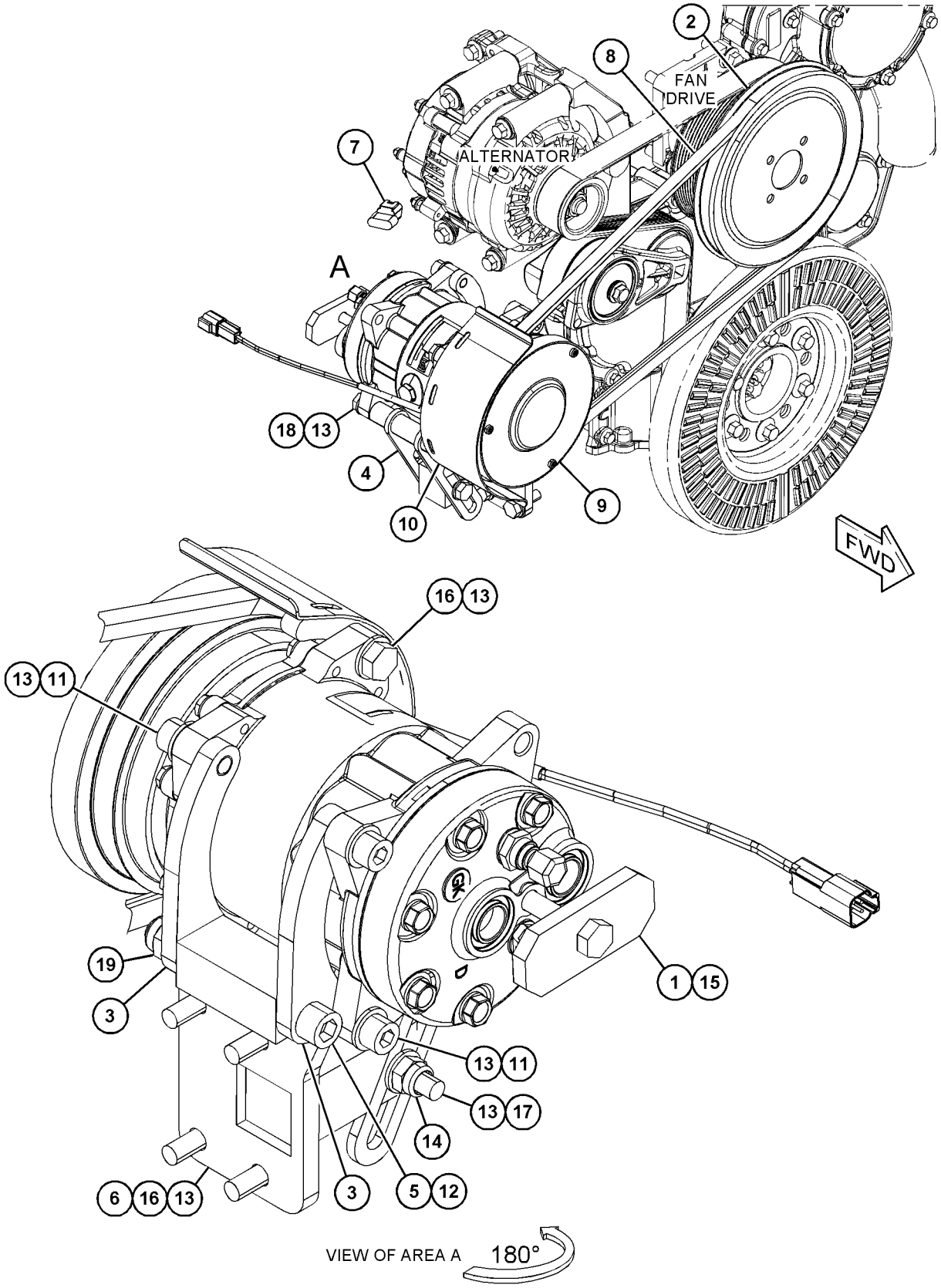

GRAPHIC #1 <END> g06032020

469-6441 COMPRESSOR GP-REFRIGERANT

S/N: CH91-UP

PART OF 466-9071 COMPRESSOR GP-REFRIGERANT

ALSO AN ATTACHMENT

SMCS-1802 **i06558899**

NOTE	REF NO	GRAPHIC REF	PART NUMBER	QTY	PART NAME 1 2 3 4 5 6 (PRODUCT LEVEL)	SEE PAGE
	1	1	**9X-3401**	2	PIN-CONNECTOR (16-GA TO 18-GA)	
					—OR—	
			126-1767	2	PIN-CONNECTOR (14-GA TO 16-GA)	
	2	1	**102-8802**	1	KIT-RECEPTACLE (2-PIN)	
					(INCLUDES RECEPTACLE AS & WEDGE)	
	3	1	**314-4018**	1	VALVE AS-PRESSURE RELIEF (REFRIGERANT COMPRESSOR)	
	4	1	**7T-4532**	1	PLUG AS	
	5	1	**9X-7385**	2	SEAL-O-RING	
					PARTS SHOWN IN GRAPHIC(S) WITHOUT A REFERENCE NUMBER ARE NOT SERVICED SEPARATELY	

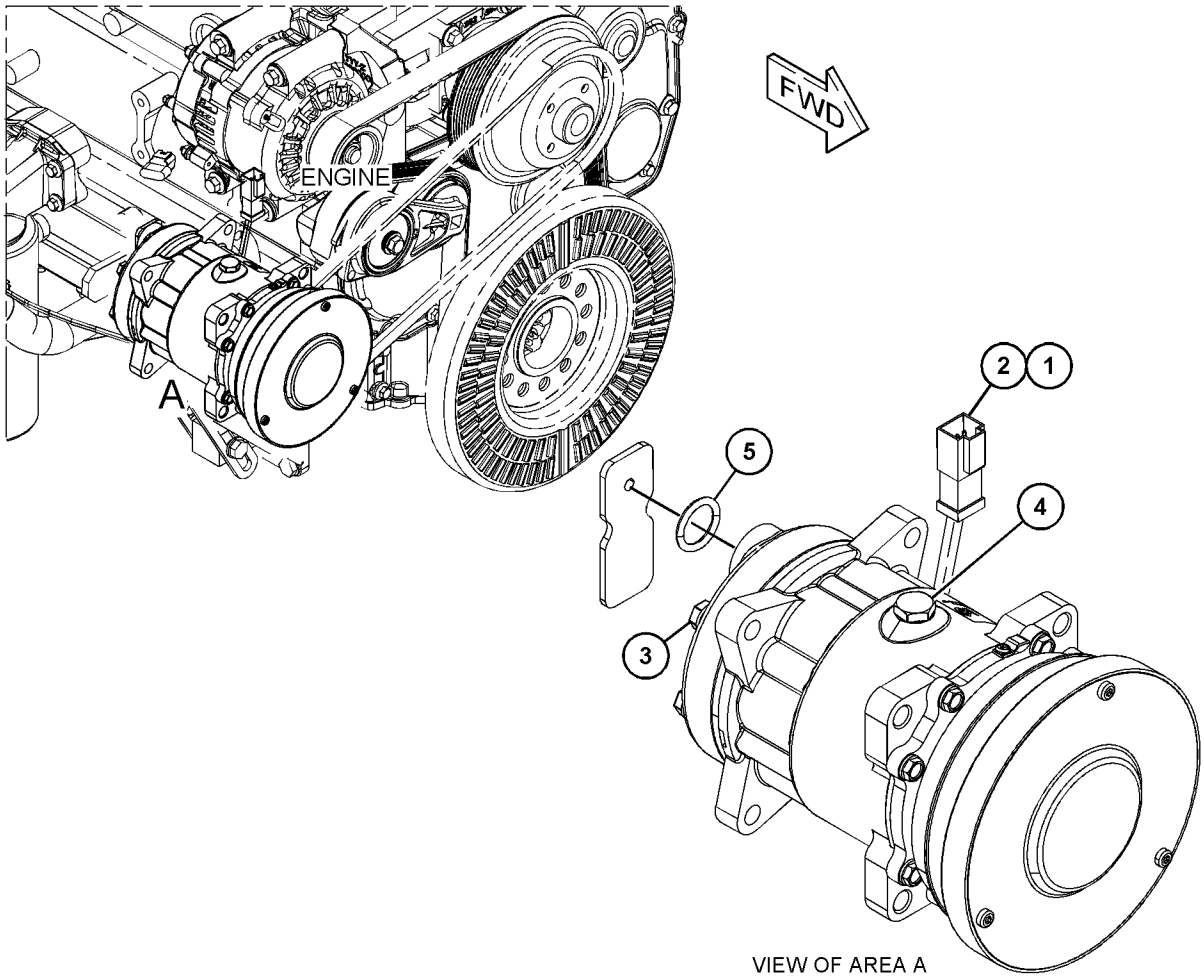

GRAPHIC #1 <END> g03873353

253-9841 CONDENSER & MTG GP-REFRIGERANT

S/N: CH91-UP

PART OF 466-9070, 466-9093 AIR CONDITIONER AR

ALSO AN ATTACHMENT

SMCS-1805 **i05496666**

NOTE	REF NO	GRAPHIC REF	PART NUMBER	QTY	PART NAME 1 2 3 4 5 6 (PRODUCT LEVEL)	SEE PAGE
	1	1	**7E-6087**	2	MOUNT-FLEXIBLE	
M	2	1	**124-3815**	2	BOLT (M8X1.25X16-MM)	
	3	1	**235-8880**	1	CONDENSER AS	
	4	1	**258-5140**	1	BRACKET	
	5	1	**260-6439**	1	HINGE AS	
M	6	1	**5C-2890**	2	NUT (M6X1-THD)	
M	7	1	**8T-4171**	4	BOLT (M6X1X12-MM)	
	8	1	**9X-8256**	6	WASHER (6.6X12X2-MM THK)	

M - METRIC PART

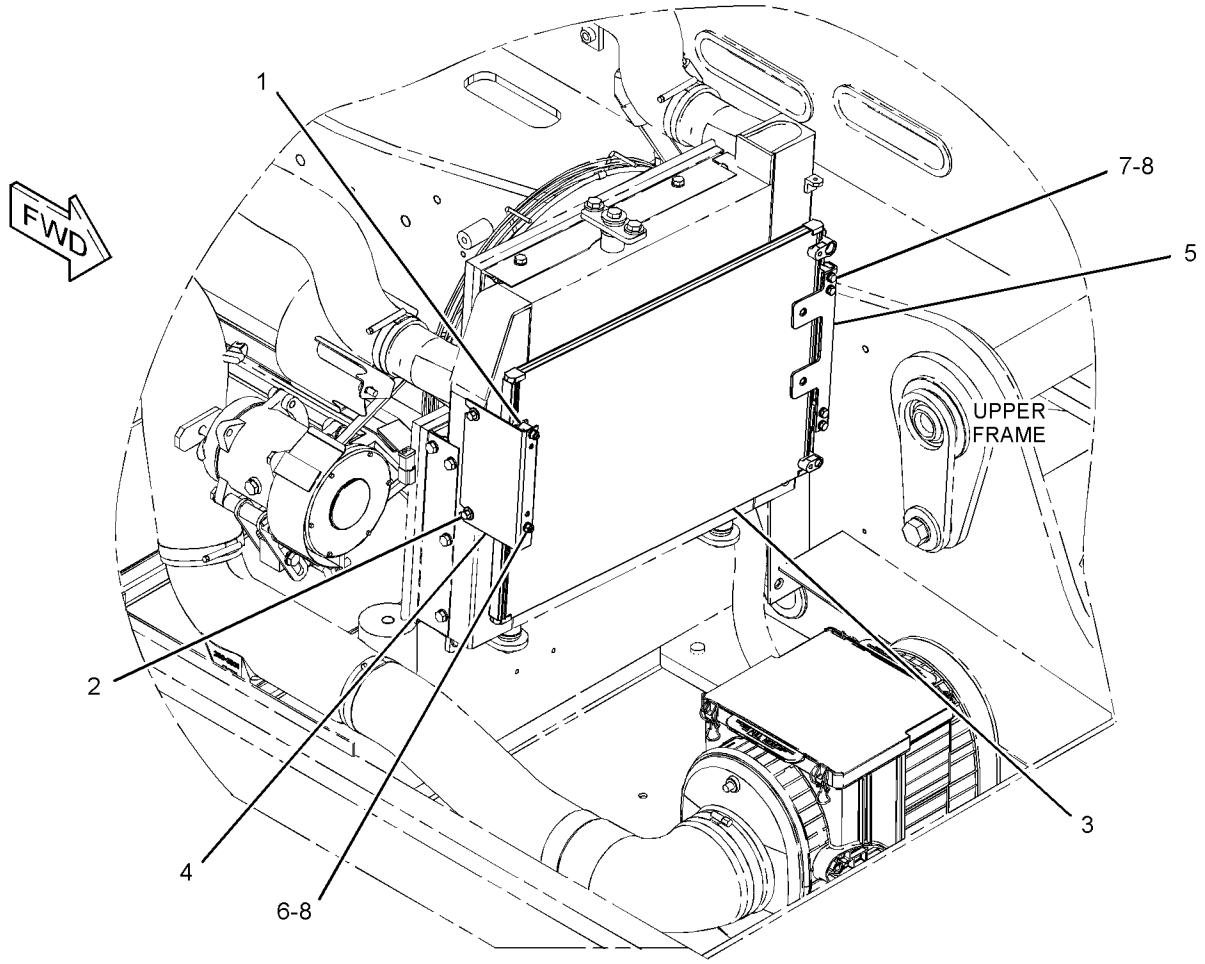

GRAPHIC #1 <END> g01323214

257-7619 CONSOLE GP-OPERATOR–LH

S/N: CH91-UP
PART OF 350-8546 CONSOLE GP-OPERATOR
ALSO AN ATTACHMENT

SMCS-5258 **i07245165**

NOTE	REF NO	GRAPHIC REF	PART NUMBER	QTY	PART NAME 1 2 3 4 5 6 (PRODUCT LEVEL)	SEE PAGE
	1	1	**089-7436**	1	PIN-SPRING	
	2	1	**109-2356**	6	PLUG	
	3	1	**125-6084**	1	NUT-SPEED	
	4	1	**195-7691**	1	LATCH AS	
	5	1	**197-5681**	1	SPRING AS-GAS	
	6	1	**201-8754**	1	BUMPER	
	7	1	**201-8768**	1	KNOB	
	8	1	**257-7621**	1	COVER AS	
		1	**109-2354**	6	HOUSING	
	9	1	**260-5083**	1	COVER AS	
	10	1	**260-5084**	1	COVER	
Y	11	1	*260-5085*	1	ARMREST GP	802
	12	1	**260-5086**	1	SUPPORT AS	
		1	**127-9580**	1	ROD	
	13	1	**260-5087**	1	ROD	
	14	1	**089-7435**	1	CLEVIS	
M	15	1	**095-0758**	2	SCREW-MACHINE (M6X1X14-MM)	
	16	1	**125-6083**	1	SCREW-PAN HEAD	
M	17	1	**131-3540**	2	LOCKNUT (M8X1.25-THD)	
M	18	1	**131-3539**	2	SCREW-FLAT HEAD (M8X1.25X30-MM)	
M	19	1	**5Y-0660**	3	NUT (M6X1-THD)	
M	20	1	**131-3990**	1	BOLT-CARRIAGE (M8X1.25X30-MM)	
	21	1	**8T-4224**	2	WASHER-HARD (8.8X16X2-MM THK)	
M	22	1	**9X-2044**	1	SCREW-TRUSS HEAD (M6X1X16-MM)	
	23	1	**231-9230**	1	SPACER (8.8X20X8-MM THK)	
	24	1	**272-4965**	1	KNOB	

M - METRIC PART
Y - SEPARATE ILLUSTRATION

257-7619 **CONSOLE GP-OPERATOR** (contd.) **i07245165**

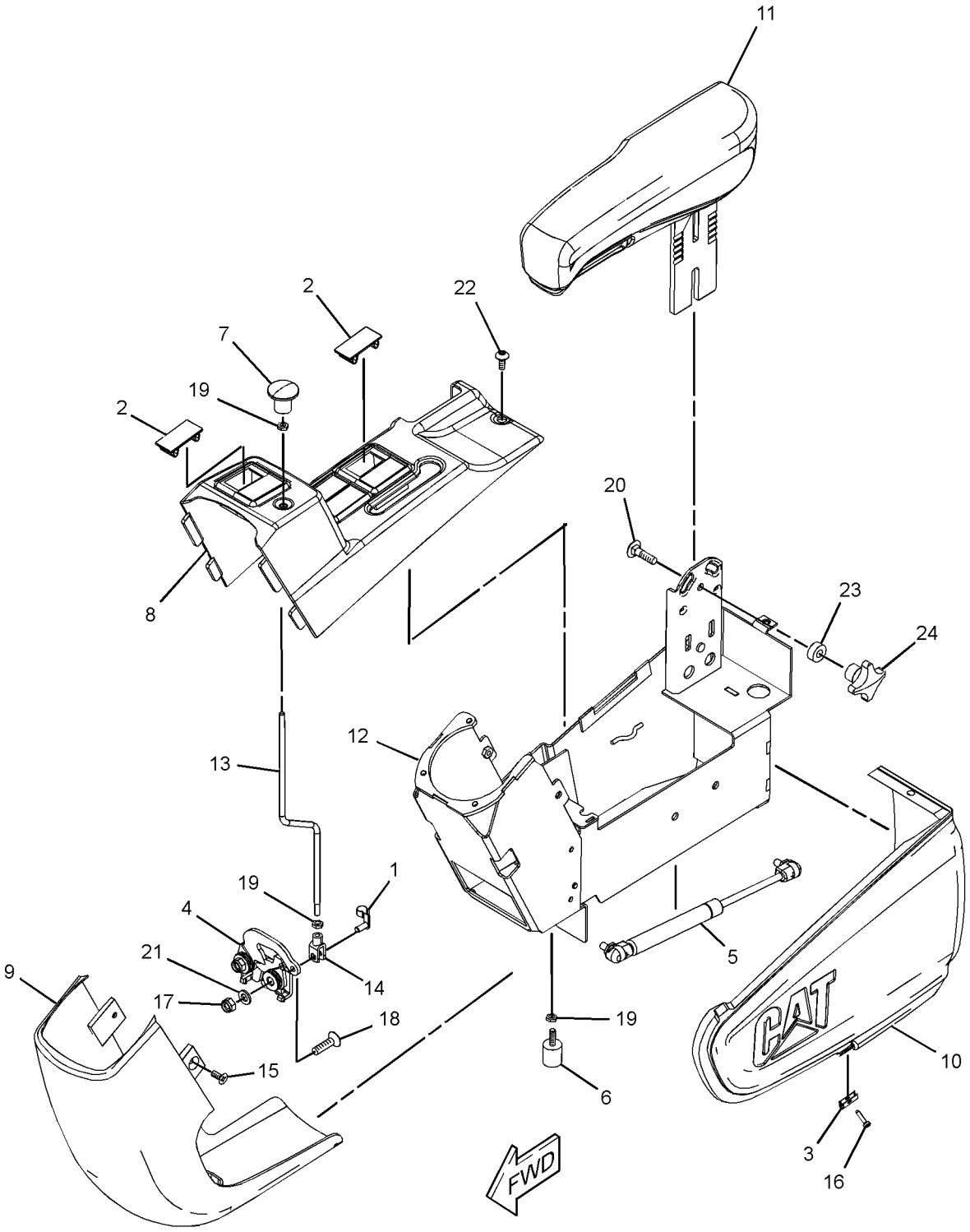

GRAPHIC #1 <END> g06262817

350-8546 CONSOLE GP-OPERATOR

S/N: CH91-UP
PART OF 396-6835 OPERATOR AR
ALSO AN ATTACHMENT

SMCS-5258 **i05507876**

NOTE	REF NO	GRAPHIC REF	PART NUMBER	QTY	PART NAME 1 2 3 4 5 6 (PRODUCT LEVEL)	SEE PAGE
Y	1	1	*257-7619*	1	CONSOLE GP-OPERATOR (LH)	814
Y	2	1	*350-8547*	1	CONSOLE GP-OPERATOR (RH)	817
M	3	1	**5C-9553**	8	BOLT (M6X1X16-MM)	
M	4	1	**8T-4138**	4	BOLT (M6X1X20-MM)	
	5	1	**9X-8256**	12	WASHER (6.6X12X2-MM THK)	

M - METRIC PART
Y - SEPARATE ILLUSTRATION

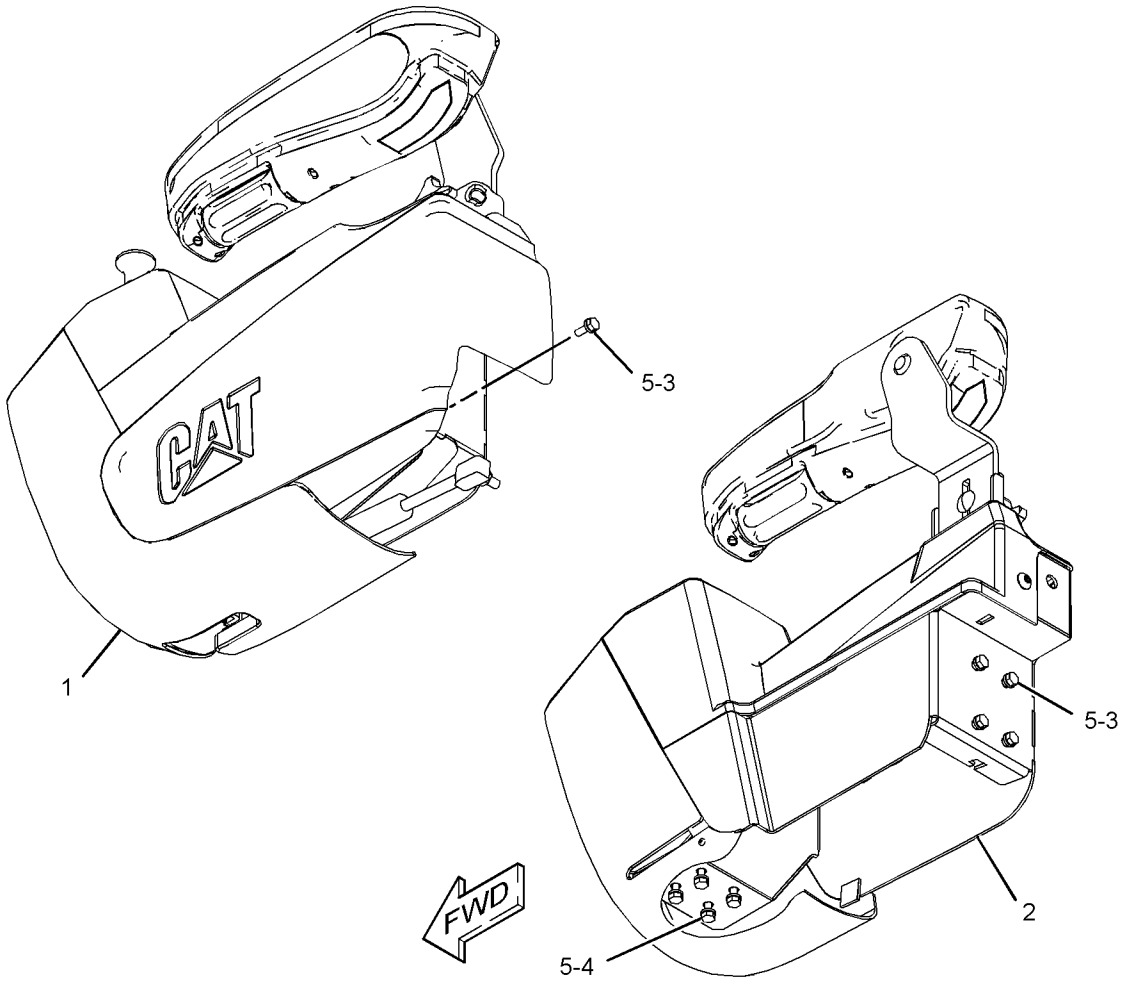

GRAPHIC #1 <END> g02431469

350-8547 CONSOLE GP-OPERATOR–RH

S/N: CH91-UP
PART OF 350-8546 CONSOLE GP-OPERATOR
ALSO AN ATTACHMENT

SMCS-5258 **i05496641**

NOTE	REF NO	GRAPHIC REF	PART NUMBER	QTY	PART NAME 1 2 3 4 5 6 (PRODUCT LEVEL)	SEE PAGE
	1	1	**125-6084**	1	NUT-SPEED	
	2	1	**231-9230**	1	SPACER (8.8X20X8-MM THK)	
	3	1	**260-5104**	1	SUPPORT AS	
Y	4	1	*260-5108*	1	ARMREST GP (RH)	803
	5	1	**260-5111**	1	COVER AS-CONSOLE	
	6	1	**272-4965**	1	KNOB	
	7	1	**352-3316**	1	COVER AS	
		1	**257-2251**	1	PANEL-SWITCH	
M	8	1	**095-0758**	2	SCREW-MACHINE (M6X1X14-MM)	
	9	1	**125-6083**	1	SCREW-PAN HEAD	
M	10	1	**131-3990**	1	BOLT-CARRIAGE (M8X1.25X30-MM)	
M	11	1	**9X-2042**	1	SCREW-TRUSS HEAD (M6X1X12-MM)	

M - METRIC PART
Y - SEPARATE ILLUSTRATION

350-8547 **CONSOLE GP-OPERATOR** (contd.) **i05496641**

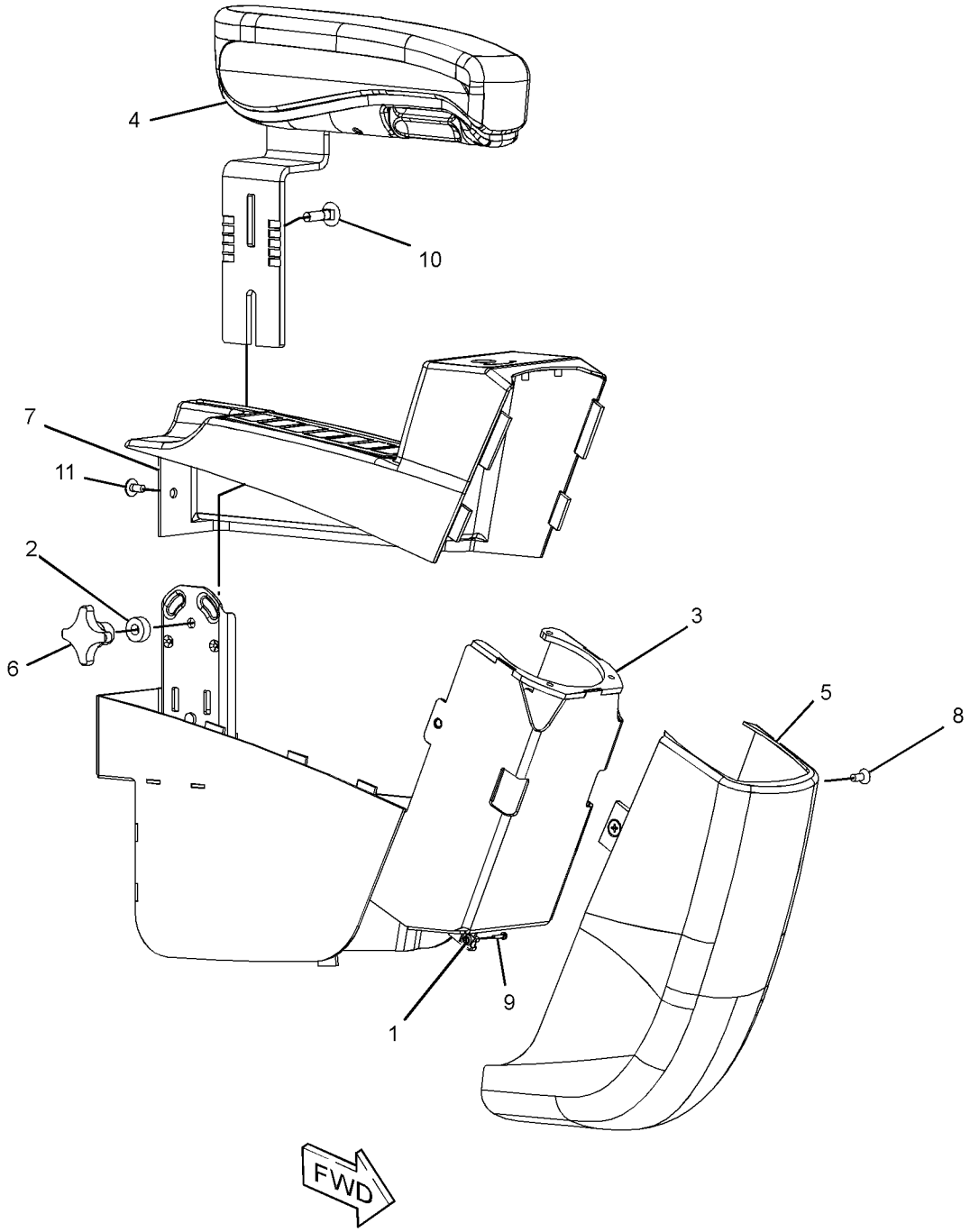

GRAPHIC #1 <END> g02431645

252-6685 CONTROL & MTG GP-PEDAL—HAMMER

S/N: CH91-UP
AN ATTACHMENT

SMCS-5462 **i05520517**

NOTE	REF NO	GRAPHIC REF	PART NUMBER	QTY	PART NAME 1 2 3 4 5 6 (PRODUCT LEVEL)	SEE PAGE
	1	1	**239-9683**	1	PIN-LOCK	
	2	1	**239-9686**	1	PLATE	
	3	1	**239-9688**	1	BOLT (M10X1.5X96-MM)	
	4	1	**239-9689**	1	LEVER AS	
Y	5	1	**297-6534**	1	PEDAL GP	869
M	6	1	**8T-0389**	1	LOCKNUT (M10X1.5-THD)	
	7	1	**8T-4121**	1	WASHER-HARD (11X21X2.5-MM THK)	
M	8	1	**8T-4189**	2	BOLT (M8X1.25X20-MM)	
	9	1	**8T-4224**	3	WASHER-HARD (8.8X16X2-MM THK)	
M	10	1	**8T-4908**	1	BOLT (M8X1.25X25-MM)	
	11	1	**3S-2093**	1	STRAP-CABLE	
B	12	1	**5W-2888**	1	WASHER (10X16X0.5-MM THK)	
F			**143-5907**	1	FILM-INSTRUCTION (HYDRAULIC HAMMER)	
					(ON TOP OF CONTROL FILM ON THE RH CAB WINDOW)	

B - USE AS REQUIRED
F - NOT SHOWN
M - METRIC PART
Y - SEPARATE ILLUSTRATION

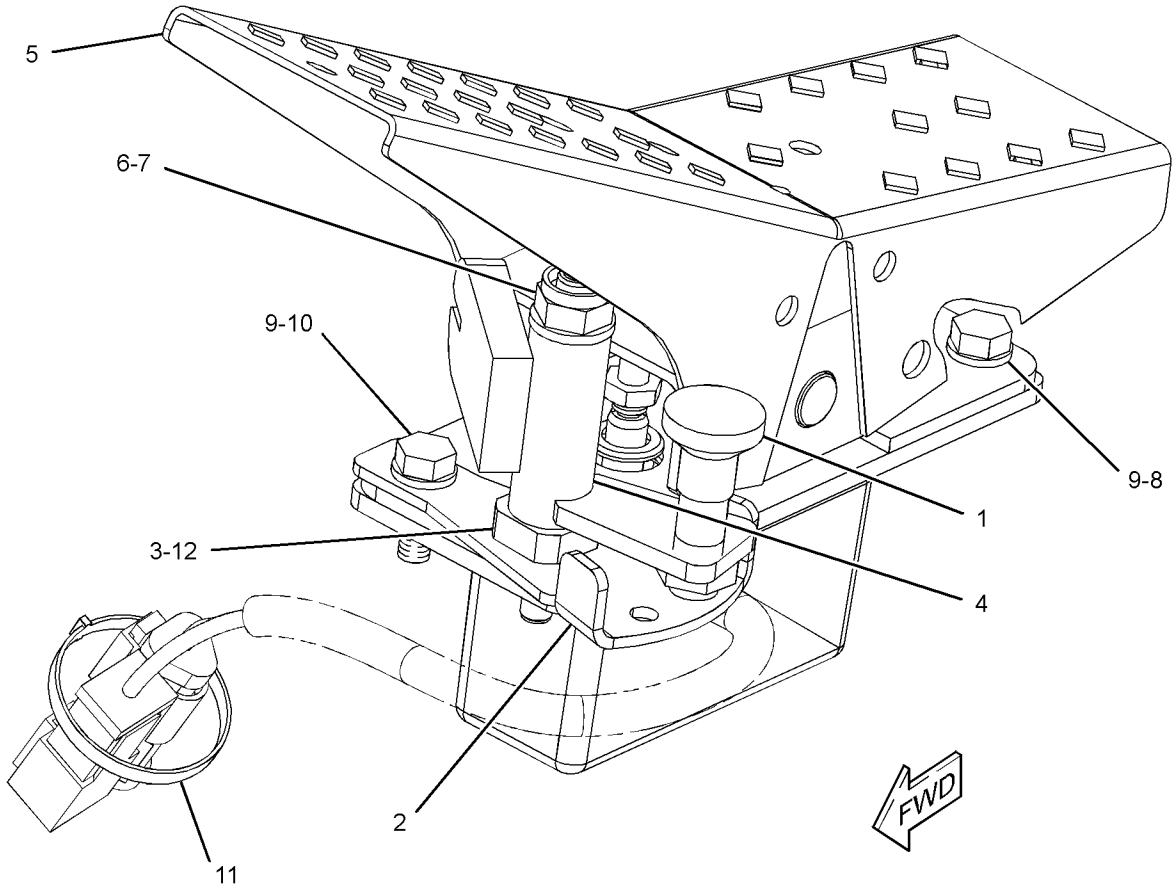

GRAPHIC #1 <END> g01404577

252-6687 CONTROL AR-HANDLE—JOYSTICK, 3-FUNCTION

S/N: CH91-UP
PART OF 417-9967 HYDRAULIC AR
AN ATTACHMENT

SMCS-5705 **i05519596**

NOTE	PART NUMBER	QTY	PART NAME 1 2 3 4 5 6 (PRODUCT LEVEL)	SEE PAGE
Y	**241-2488**	2	CONTROL GP-HANDLE (WITH SLIDE CONTROL)	821
	266-0554	1	FILM-IDENTIFICATION (JOYSTICK CONTROL)	
			(INSIDE CAB ON RH CAB WINDOW)	
Y - SEPARATE ILLUSTRATION				

<END>

252-6688 CONTROL AR-HANDLE—JOYSTICK

S/N: CH91-UP
PART OF 445-2355, 457-4857 HYDRAULIC AR
AN ATTACHMENT

SMCS-5705 **i05519589**

NOTE	PART NUMBER	QTY	PART NAME 1 2 3 4 5 6 (PRODUCT LEVEL)	SEE PAGE
Y	**241-2488**	1	CONTROL GP-HANDLE (WITH SLIDE CONTROL)	821
Y	**387-6395**	1	CONTROL GP-HANDLE (WITH TWO SLIDE CONTROLS)	823
Y - SEPARATE ILLUSTRATION				

<END>

252-6689 CONTROL AR-HANDLE—JOYSTICK WITH SLIDE CONTROL

S/N: CH91-UP
PART OF 420-9020 HYDRAULIC AR
AN ATTACHMENT

SMCS-5705 **i05496726**

NOTE	PART NUMBER	QTY	PART NAME 1 2 3 4 5 6 (PRODUCT LEVEL)	SEE PAGE
Y	**387-6395**	2	CONTROL GP-HANDLE (WITH TWO SLIDE CONTROLS)	823
	266-0559	1	FILM-IDENTIFICATION (JOYSTICK CONTROL, READ OMM)	
			(INSIDE CAB ON RH WINDOW)	
Y - SEPARATE ILLUSTRATION				

<END>

241-2488 CONTROL GP-HANDLE—WITH SLIDE CONTROL

S/N: CH91-UP
PART OF 252-6687, 252-6688 CONTROL AR-HANDLE
AN ATTACHMENT

SMCS-5705 **i05519592**

NOTE	REF NO	GRAPHIC REF	PART NUMBER	QTY	PART NAME 1 2 3 4 5 6 (PRODUCT LEVEL)	SEE PAGE
	1	1	**175-3355**	1	RECEPTACLE AS-CONNECTOR	
	2	1	**3E-3383**	1	WEDGE-RECEPTACLE LOCK (6-PIN)	
	3	1	**9X-3401**	6	PIN-CONNECTOR (16-GA TO 18-GA)	

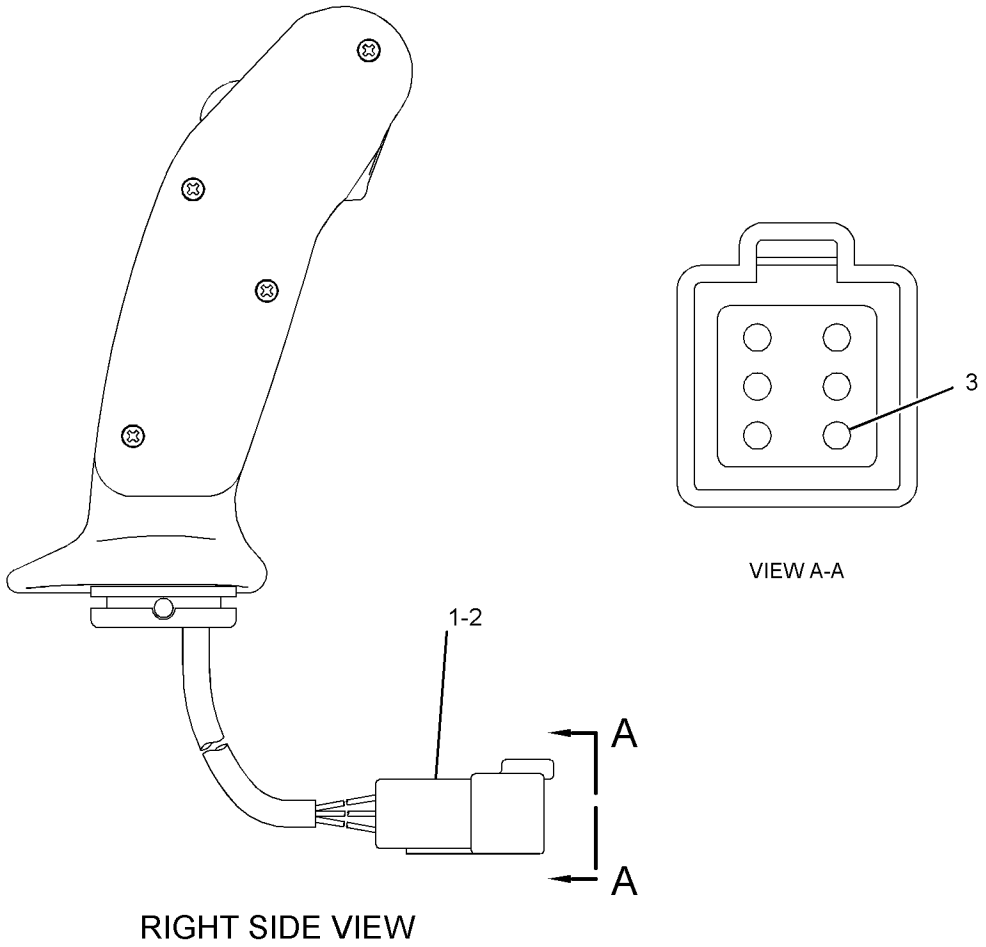

GRAPHIC #1 <END> g01329498

372-5012 CONTROL GP-HANDLE—HOOD RELEASE

S/N: CH91-UP
PART OF 454-3396 ENCLOSURE GP-ENGINE
ALSO AN ATTACHMENT

SMCS-5705 **i05517650**

NOTE	REF NO	GRAPHIC REF	PART NUMBER	QTY	PART NAME 1 2 3 4 5 6 (PRODUCT LEVEL)	SEE PAGE
M	1	1	**5C-2874**	1	NUT (M5X0.8-THD)	
	2	1	**8T-4224**	3	WASHER-HARD (8.8X16X2-MM THK)	
M	3	1	**5C-7261**	3	NUT (M8X1.25-THD)	
M	4	1	**5C-2890**	1	NUT (M6X1-THD)	
	5	1	**089-7435**	1	CLEVIS	
	6	1	**089-7436**	1	PIN-SPRING	

M - METRIC PART

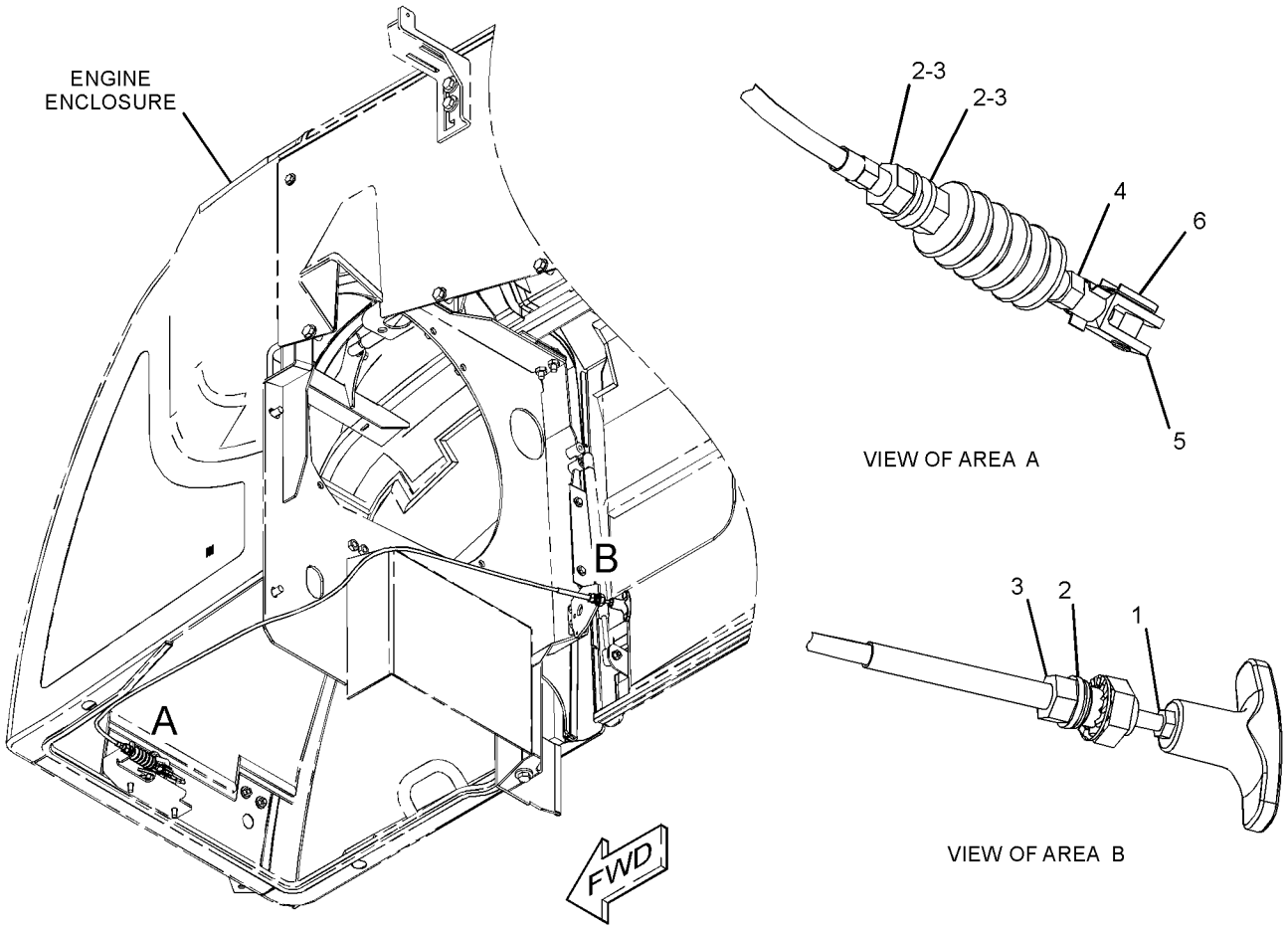

GRAPHIC #1 <END> g02732238

387-6395 CONTROL GP-HANDLE—WITH TWO SLIDE CONTROLS

S/N: CH91-UP

PART OF 252-6688, 252-6689 CONTROL AR-HANDLE

AN ATTACHMENT

SMCS-5705 **i07280965**

NOTE	REF NO	GRAPHIC REF	PART NUMBER	QTY	PART NAME 1 2 3 4 5 6 (PRODUCT LEVEL)	SEE PAGE
	1	1	**175-3355**	1	RECEPTACLE AS-CONNECTOR	
	2	1	**3E-3383**	1	WEDGE-RECEPTACLE LOCK (6-PIN)	
	3	1	**171-0596**	1	RECEPTACLE AS-CONNECTOR (3-PIN)	
	4	1	**3E-3371**	1	WEDGE-RECEPTACLE LOCK (3-PIN)	
	5	1	**9X-3401**	9	PIN-CONNECTOR (16-GA TO 18-GA)	

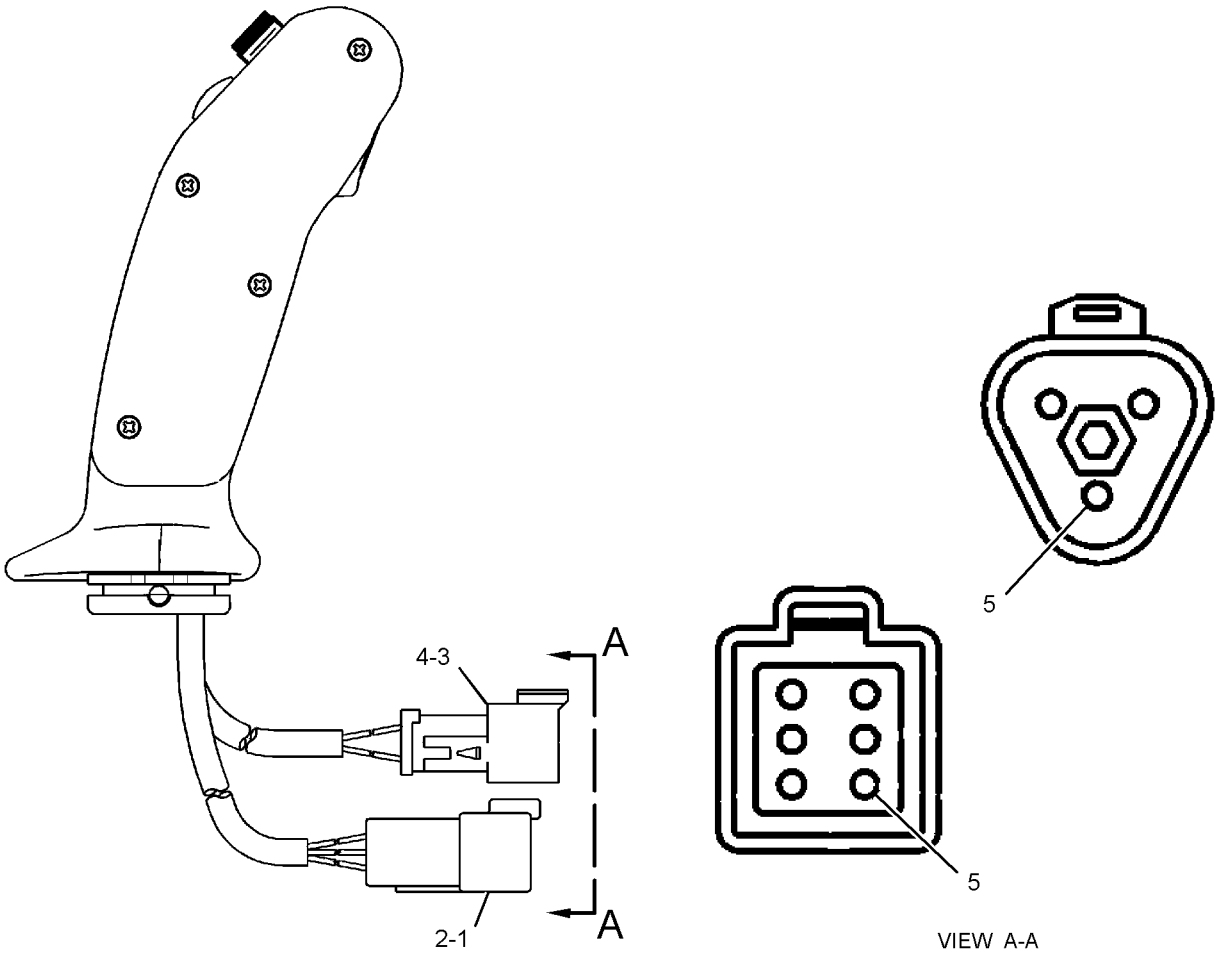

GRAPHIC #1 <END> g06272468

245-7846 CONTROL GP-HEAT & AIR COND—AIR INLET

S/N: CH91-UP
PART OF 316-8916 AIR CONDITIONER GP
ALSO AN ATTACHMENT

SMCS-7309 **i07106952**

NOTE	REF NO	GRAPHIC REF	PART NUMBER	QTY	PART NAME 1 2 3 4 5 6 (PRODUCT LEVEL)	SEE PAGE
	1	1	**185-8300**	4	SCREW-TAPPING	
	2	1	**196-1666**	1	RELAY (COMPRESSOR CLUTCH)	
	2A	1	**196-1666**	1	RELAY (BLOWER)	
	3	1	**245-7813**	1	MOTOR AS	
	4	1	**245-7814**	1	BRACKET	
	5	1	**245-7815**	1	SENSOR AS-TEMPERATURE (AIR)	
	6	1	**245-7816**	1	DAMPER AS	

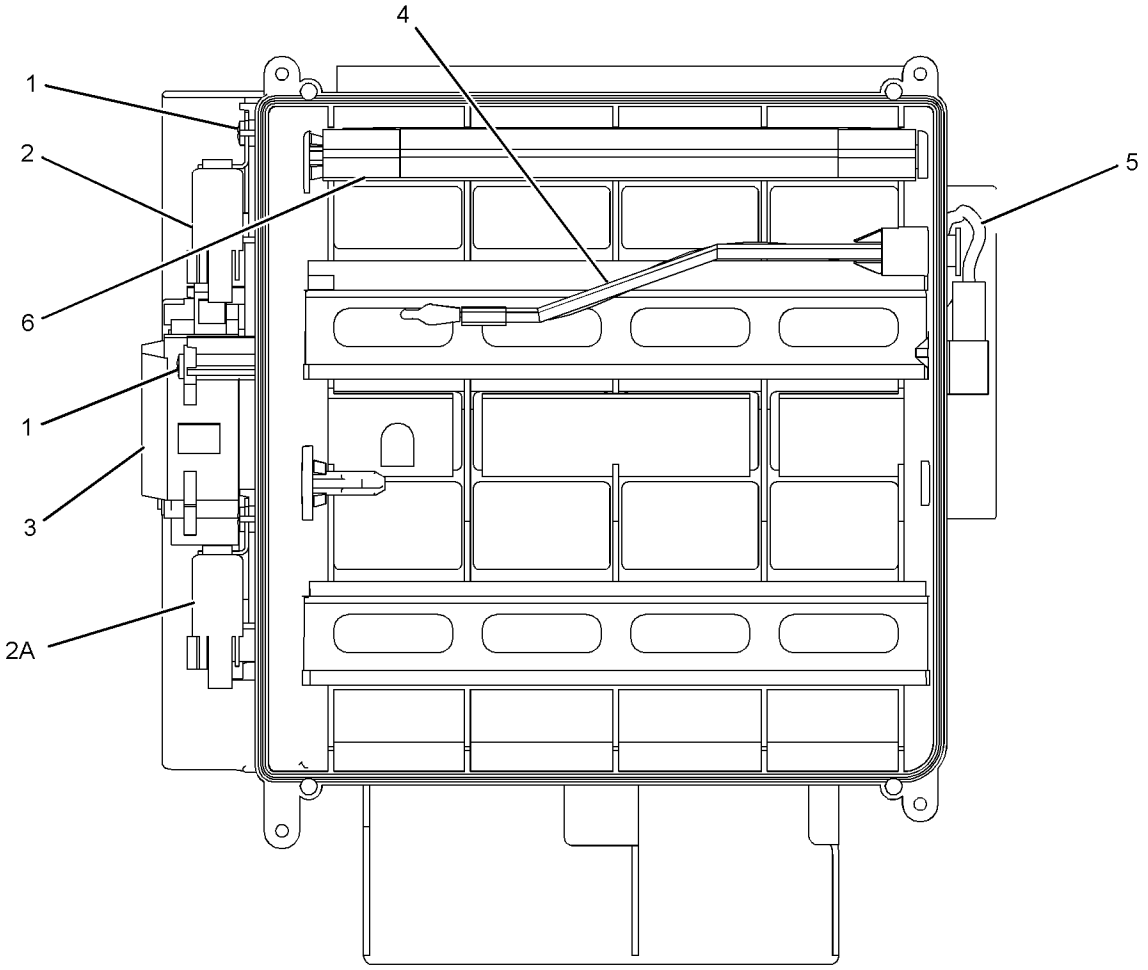

GRAPHIC #1 <END> g01245591

257-6104 CONTROL GP-HYDRAULIC HAND—STABILIZER BLADE

S/N: CH91-UP

PART OF 250-9614, 495-6043, 499-0214, 499-0216, 499-0217 CONTROL GP-JOYSTICK

ALSO AN ATTACHMENT

SMCS-5059, 5063 **i05496636**

NOTE	REF NO	GRAPHIC REF	PART NUMBER	QTY	PART NAME 1 2 3 4 5 6 (PRODUCT LEVEL)	SEE PAGE
	1	1	**116-4481**	1	PLATE	
M	3	1	**8T-9534**	2	BOLT (M6X1X50-MM)	
	4	1	**131-0432**	1	KIT-SPRING	
					(INCLUDES SPRINGS)	
	5	1	**270-3845**	1	BELLOWS	
	6	1	**201-2484**	2	KIT-REGULATOR	
	7	1	**201-2485**	2	KIT-PLUNGER	
					(INCLUDES PLUNGER GUIDE, HOLLOW PLUNGER, WASHER, PLATE, SNAP RING)	
	8	1	**116-4484**	1	HANDLE	
					AVAILABLE REPAIR KIT(S):	
			223-1394	1	KIT-LEVER	
					(INCLUDES PARTS MARKED J IN GRAPHIC)	

M - METRIC PART

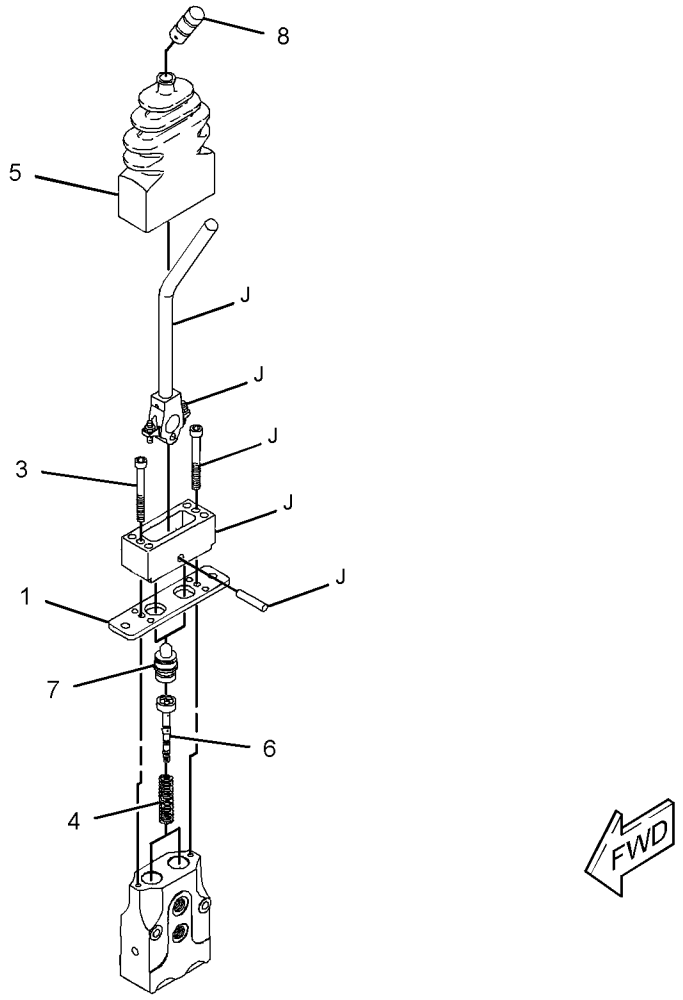

GRAPHIC #1 <END> g01337743

112-5704 CONTROL GP-HYDRAULIC PEDAL

S/N: CH91-UP
PART OF 274-5423 LINES GP-PILOT
AN ATTACHMENT

SMCS-5059, 5063 **i05519557**

NOTE	REF NO	GRAPHIC REF	PART NUMBER	QTY	PART NAME 1 2 3 4 5 6 (PRODUCT LEVEL)	SEE PAGE
	1	1	**201-0895**	1	KIT-PLATE (PEDAL CONTROL)	
					(INCLUDES BUSHINGS & PLATE)	
	2	1	**117-8699**	1	WASHER (12.1X24X1.95-MM THK)	
M	3	1	**107-2723**	1	BOLT-SOCKET HEAD (M12X1.75X20-MM)	
	4	1	**201-0901**	1	KIT-SPRING (PEDAL CONTROL)	
					(INCLUDES SPRINGS)	
	5	1	**117-8700**	1	PEDAL	
J	6	1	**201-0502**	1	KIT-PEDAL (PEDAL CONTROL)	
					(INCLUDES SCREWS, NUTS & PEDAL AXIS)	
JM	7	1	**116-1119**	1	SETSCREW	
M	8	1	**5P-7970**	2	NUT (M8X1.25-THD)	
	9	1	**242-1979**	2	KIT-REGULATOR (WITH SPRING) (PEDAL CONTROL)	
					(INCLUDES WASHER RETAINER, SPRING RETAINER, SPRING, SHIMS, & SPOOL)	
	10	1	**126-8059**	1	CAP-PLASTIC	
	11	1	**242-1978**	2	KIT-PLUNGER (PEDAL)	
					(INCLUDES PLUNGER, PLUNGER GUIDE, WASHER, PLATER, SNAP RING & PROTECTING CAP)	
	12	1	**201-0533**	1	KIT-BELLOWS (PEDAL CONTROL)	
					(INCLUDES BELLOWS)	

J - KIT MARKED J SERVICES PART(S) MARKED J
M - METRIC PART

112-5704 **CONTROL GP-HYDRAULIC PEDAL** (contd.) **i05519557**

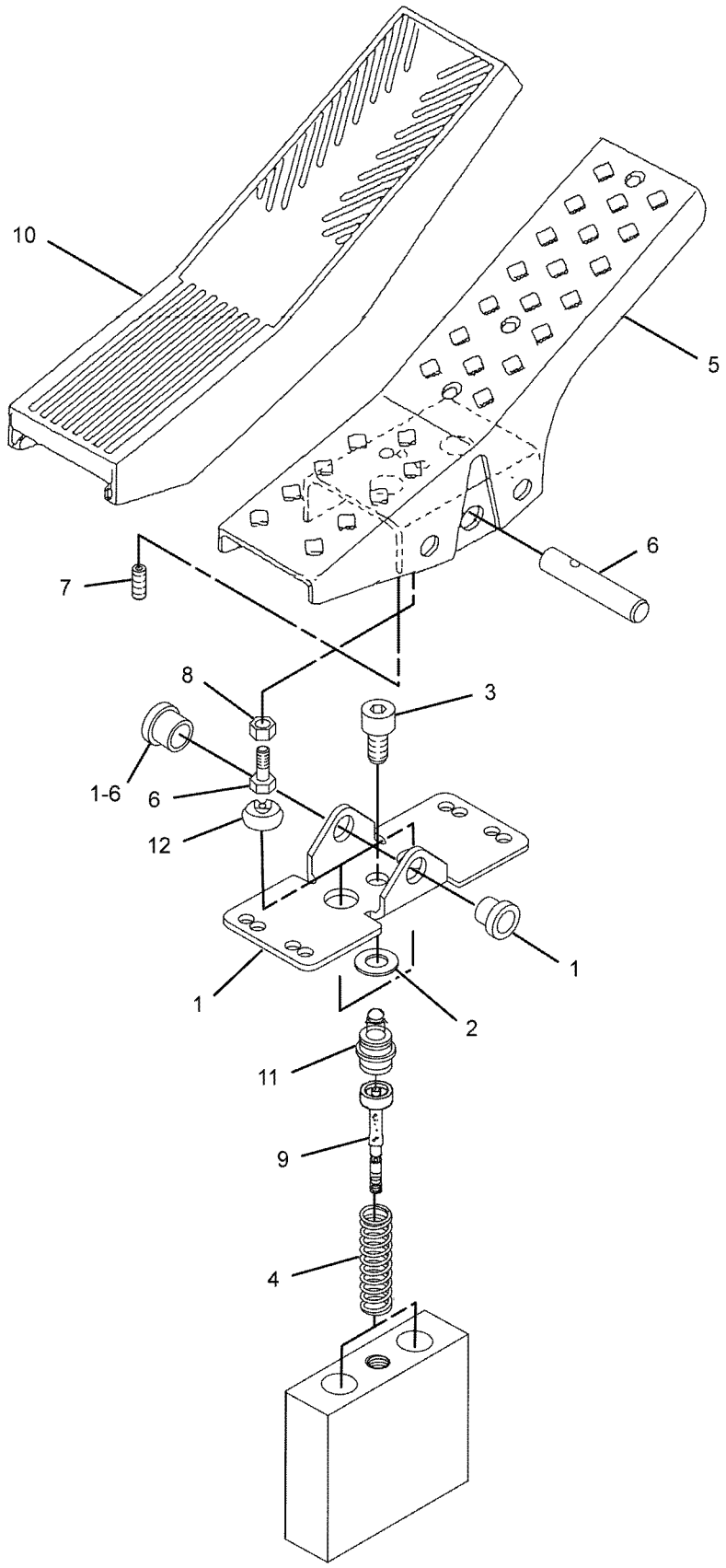

GRAPHIC #1 <END> g01044205

254-2685 CONTROL GP-HYDRAULIC PEDAL—TRAVEL

S/N: CH91-UP
PART OF 250-9621 CONTROL GP-PEDAL
AN ATTACHMENT

SMCS-5059, 5063 **i05797238**

NOTE	REF NO	GRAPHIC REF	PART NUMBER	QTY	PART NAME 1 2 3 4 5 6 (PRODUCT LEVEL)	SEE PAGE
	1	1	**126-8059**	1	CAP-PLASTIC	
	2	1	**117-8700**	1	PEDAL	
	3	1	**201-0533**	1	KIT-BELLOWS	
					(INCLUDES BELLOWS)	
	4	1	**242-1978**	2	KIT-PLUNGER (PEDAL)	
	5	1	**261-7117**	1	KIT-REGULATOR (HYDRAULIC PEDAL CONTROL)	
					(INCLUDES WASHER RETAINER, SPRING RETAINER, SPRING, SHIMS & SPOOL)	
	6	1	**201-0901**	1	KIT-SPRING	
					(INCLUDES SPRINGS)	
M	7	1	**107-2723**	1	BOLT-SOCKET HEAD (M12X1.75X20-MM)	
N	8	1	**129-4508**	1	COIL AS	
		1	**8T-8729**	2	PIN-CONNECTOR (16-GA TO 20-GA)	
N	9	1	**116-1132**	1	BOOT	
	10	1	**8T-8729**	2	PIN-CONNECTOR (16-GA TO 20-GA)	
					AVAILABLE REPAIR KIT(S):	
			242-1975	1	KIT-PEDAL (HYDRAULIC PEDAL CONTROL)	
					(INCLUDES PARTS MARKED K IN GRAPHIC)	
			237-5175	1	KIT-SENSOR (PEDAL)	
					(INCLUDES PARTS MARKED L IN GRAPHIC)	
			242-2176	1	KIT-PLATE (HYDRAULIC PEDAL CONTROL)	
					(INCLUDES PARTS MARKED H IN GRAPHIC)	
N			**201-1395**	1	KIT-PEDAL (HYDRAULIC PEDAL CONTROL)	
					(ALSO INCLUDES PARTS MARKED J IN GRAPHIC)	

M - METRIC PART
N - KIT MARKED N SERVICES PART(S) MARKED N

254-2685 **CONTROL GP-HYDRAULIC PEDAL (**contd.**)** **i05797238**

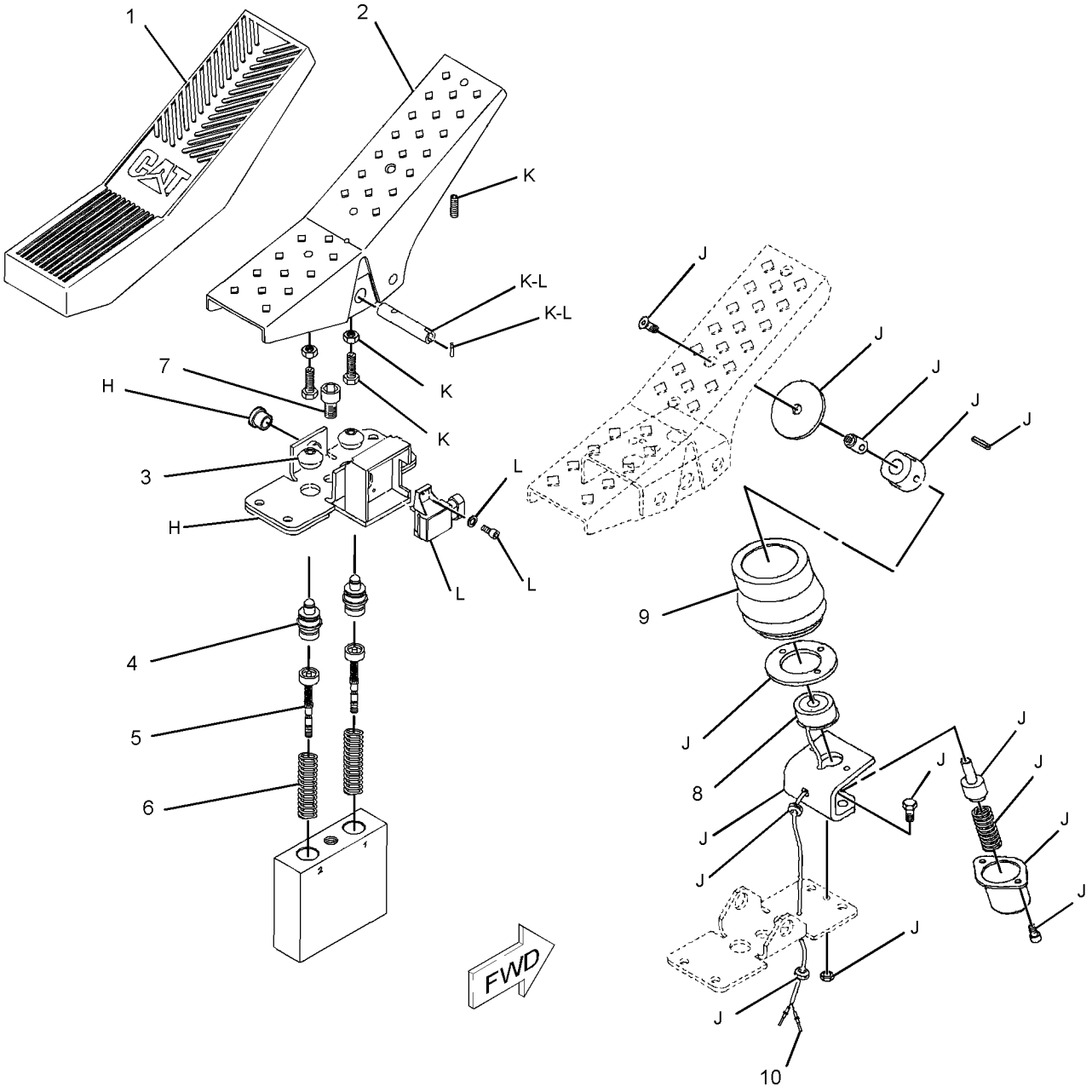

GRAPHIC #1 <END> g03691712

250-9614 CONTROL GP-JOYSTICK

S/N: CH91-UP
PART OF 396-6835 OPERATOR AR
ALSO AN ATTACHMENT

SMCS-5705 **i05507869**

NOTE	REF NO	GRAPHIC REF	PART NUMBER	QTY	PART NAME 1 2 3 4 5 6 (PRODUCT LEVEL)	SEE PAGE
Y	1	1	**257-6104**	1	CONTROL GP-HYDRAULIC HAND (STABILIZER BLADE)	825
Y	2	1	*260-5112*	2	CONTROL GP-PILOT OPERATED HYD	838
M	3	1	**5C-7883**	6	BOLT-SOCKET HEAD (M6X1X16-MM)	
M	4	1	**8T-4200**	2	BOLT (M8X1.25X16-MM)	
	5	1	**9X-8256**	6	WASHER (6.6X12X2-MM THK)	

M - METRIC PART
Y - SEPARATE ILLUSTRATION

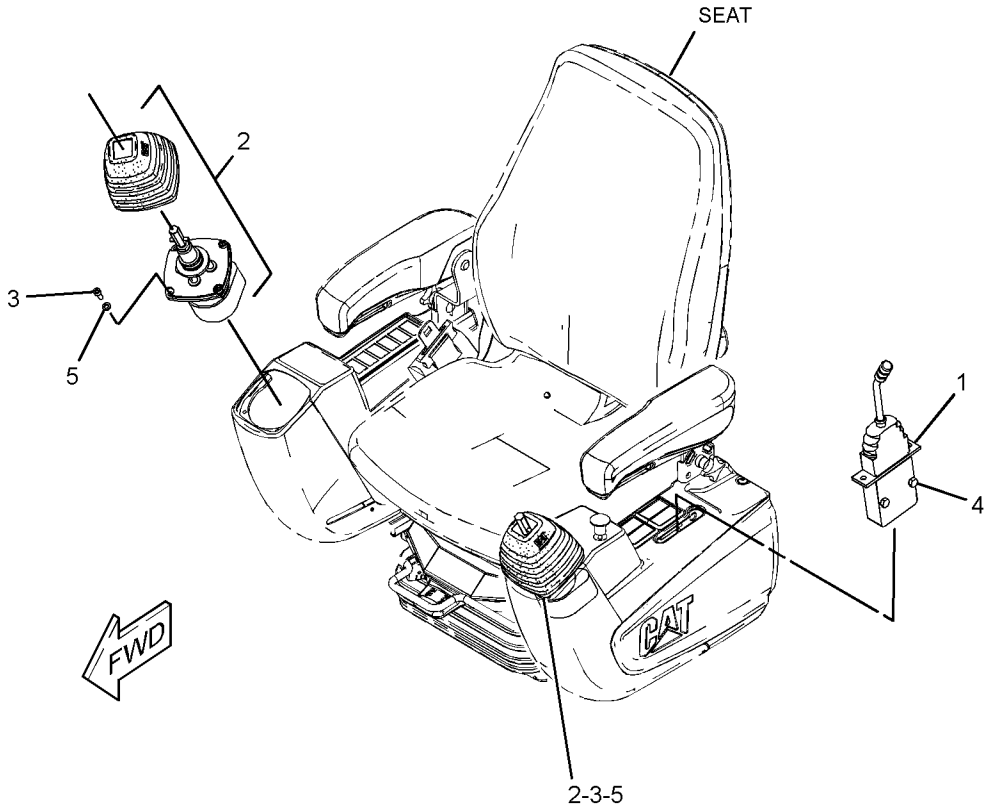

GRAPHIC #1 <END> g01318233

481-9615 CONTROL GP-JOYSTICK

S/N: CH91-UP

PART OF 495-6043, 499-0214, 499-0217 CONTROL GP-JOYSTICK

AN ATTACHMENT

SMCS-5705 **i06835520**

NOTE	REF NO	GRAPHIC REF	PART NUMBER	QTY	PART NAME 1 2 3 4 5 6 (PRODUCT LEVEL)	SEE PAGE
	1	1	**481-9614**	1	CONTROL GP-HANDLE	
		1	**8T-8737**	6	PLUG-SEAL	
		1	**9X-3401**	6	PIN-CONNECTOR (16-GA TO 18-GA)	
		1	**174-3091**	1	KIT-RECEPTACLE (12-PIN)	
					(INCLUDES RECEPTACLE AS & WEDGE)	
Y	2	1	**243-4046**	1	VALVE GP-PILOT (JOYSTICK)	684
	3	1	**239-9690**	1	BOOT	
					AVAILABLE REPAIR KIT(S):	
			151-4522	1	KIT-LEVER	
					(INCLUDES PARTS MARKED "J" IN THE GRAPHIC)	

Y - SEPARATE ILLUSTRATION

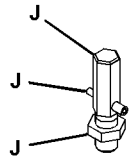

VIEW OF AREA A
(PARTS REMOVED FOR CLARITY)

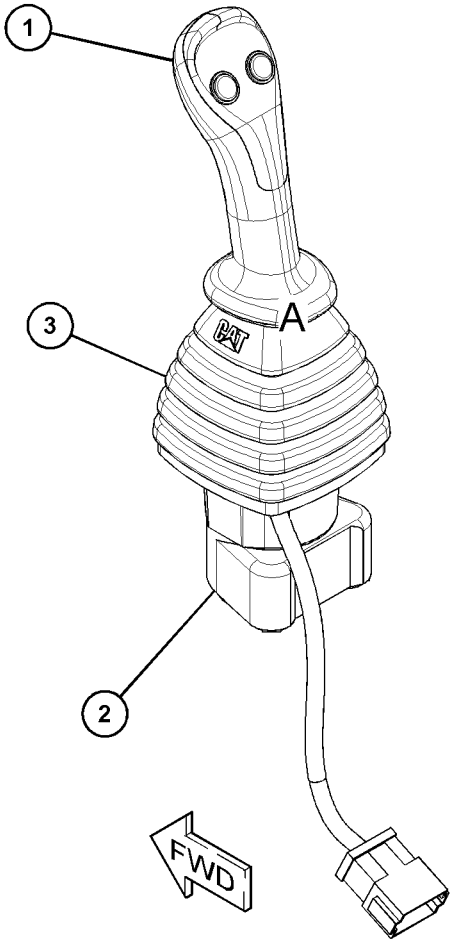

GRAPHIC #1 <END> g06135880

495-6043 CONTROL GP-JOYSTICK

S/N: CH91-UP
PART OF 457-4857 HYDRAULIC AR
AN ATTACHMENT

SMCS-5705 **i07434399**

NOTE	REF NO	GRAPHIC REF	PART NUMBER	QTY	PART NAME 1 2 3 4 5 6 (PRODUCT LEVEL)	SEE PAGE
Y	1	1	**481-9615**	1	CONTROL GP-JOYSTICK (LH)	831
Y	2	1	**257-6104**	1	CONTROL GP-HYDRAULIC HAND (STABILIZER BLADE)	825
	3	1	**266-0556**	1	FILM-INFORMATION (OPERATOR CONTROLS, READ OMM)	
Y	4	1	**539-6714**	1	CONTROL GP-JOYSTICK (RH)	836
M	5	1	**289-4232**	6	BOLT (M6X1X16-MM)	
M	6	1	**8T-4200**	2	BOLT (M8X1.25X16-MM)	
	7	1	**9X-8256**	12	WASHER (6.6X12X2-MM THK)	

M - METRIC PART
Y - SEPARATE ILLUSTRATION

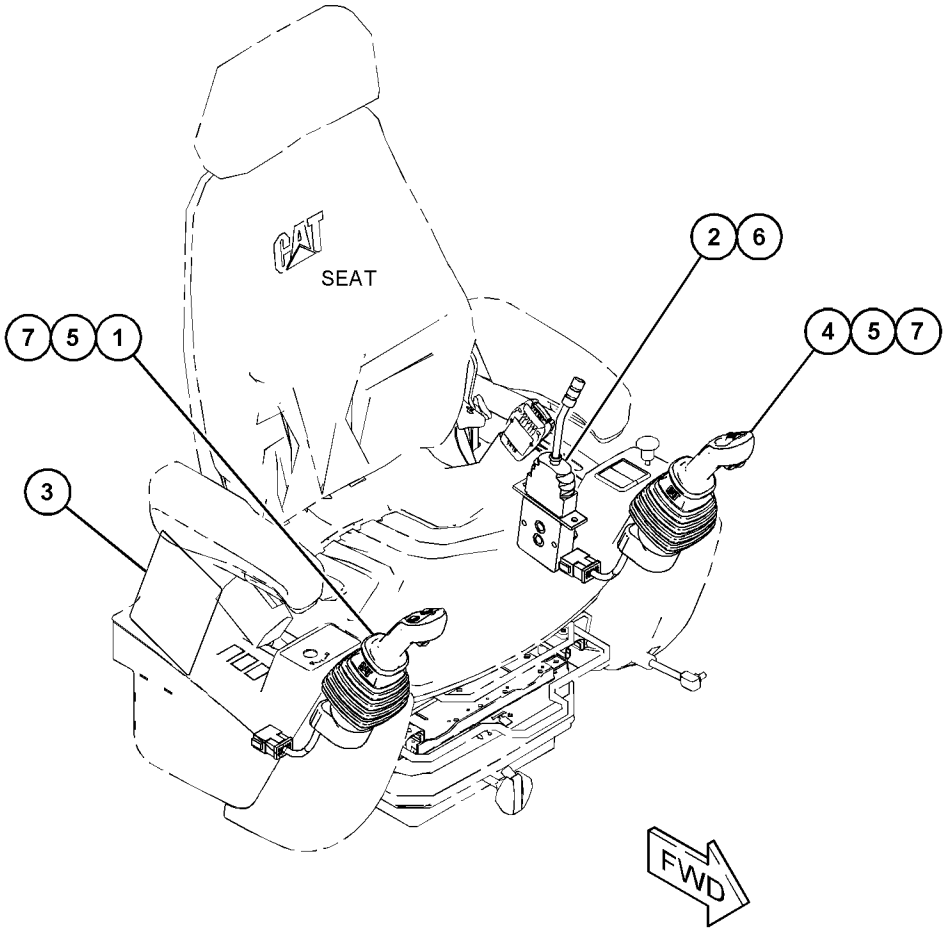

GRAPHIC #1 <END> g06135912

499-0214 CONTROL GP-JOYSTICK

S/N: CH91-UP
PART OF 445-2355 HYDRAULIC AR
AN ATTACHMENT

SMCS-5705 **i07434373**

NOTE	REF NO	GRAPHIC REF	PART NUMBER	QTY	PART NAME 1 2 3 4 5 6 (PRODUCT LEVEL)	SEE PAGE
Y	1	1	**481-9615**	1	CONTROL GP-JOYSTICK (LH)	831
Y	2	1	**257-6104**	1	CONTROL GP-HYDRAULIC HAND (STABILIZER BLADE)	825
	3	1	**266-0558**	1	FILM-INSTRUCTION (OPERATOR CONTROLS, READ OMM)	
Y	4	1	**539-6714**	1	CONTROL GP-JOYSTICK (RH)	836
M	5	1	**289-4232**	6	BOLT (M6X1X16-MM)	
M	6	1	**8T-4200**	2	BOLT (M8X1.25X16-MM)	
	7	1	**9X-8256**	12	WASHER (6.6X12X2-MM THK)	

M - METRIC PART
Y - SEPARATE ILLUSTRATION

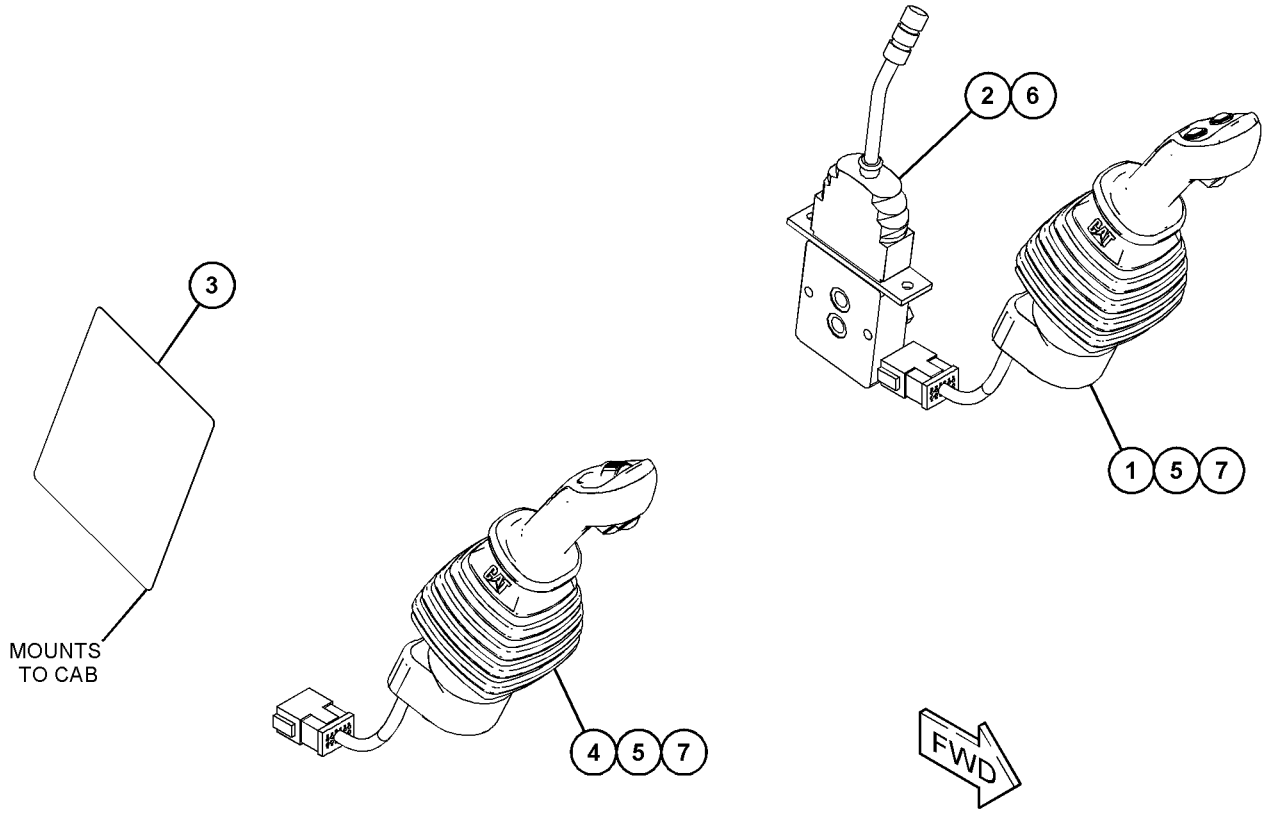

GRAPHIC #1 <END> g06136759

499-0216 CONTROL GP-JOYSTICK

S/N: CH91-UP
PART OF 420-9020 HYDRAULIC AR
AN ATTACHMENT

SMCS-5705 **i07434343**

NOTE	REF NO	GRAPHIC REF	PART NUMBER	QTY	PART NAME 1 2 3 4 5 6 (PRODUCT LEVEL)	SEE PAGE
Y	1	1	**257-6104**	1	CONTROL GP-HYDRAULIC HAND (STABILIZER BLADE)	825
	2	1	**266-0559**	1	FILM-IDENTIFICATION (JOYSTICK CONTROL, READ OMM)	
Y	3	1	**539-6714**	2	CONTROL GP-JOYSTICK (RH, LH)	836
M	4	1	**289-4232**	6	BOLT (M6X1X16-MM)	
M	5	1	**8T-4200**	2	BOLT (M8X1.25X16-MM)	
	6	1	**9X-8256**	12	WASHER (6.6X12X2-MM THK)	

M - METRIC PART
Y - SEPARATE ILLUSTRATION

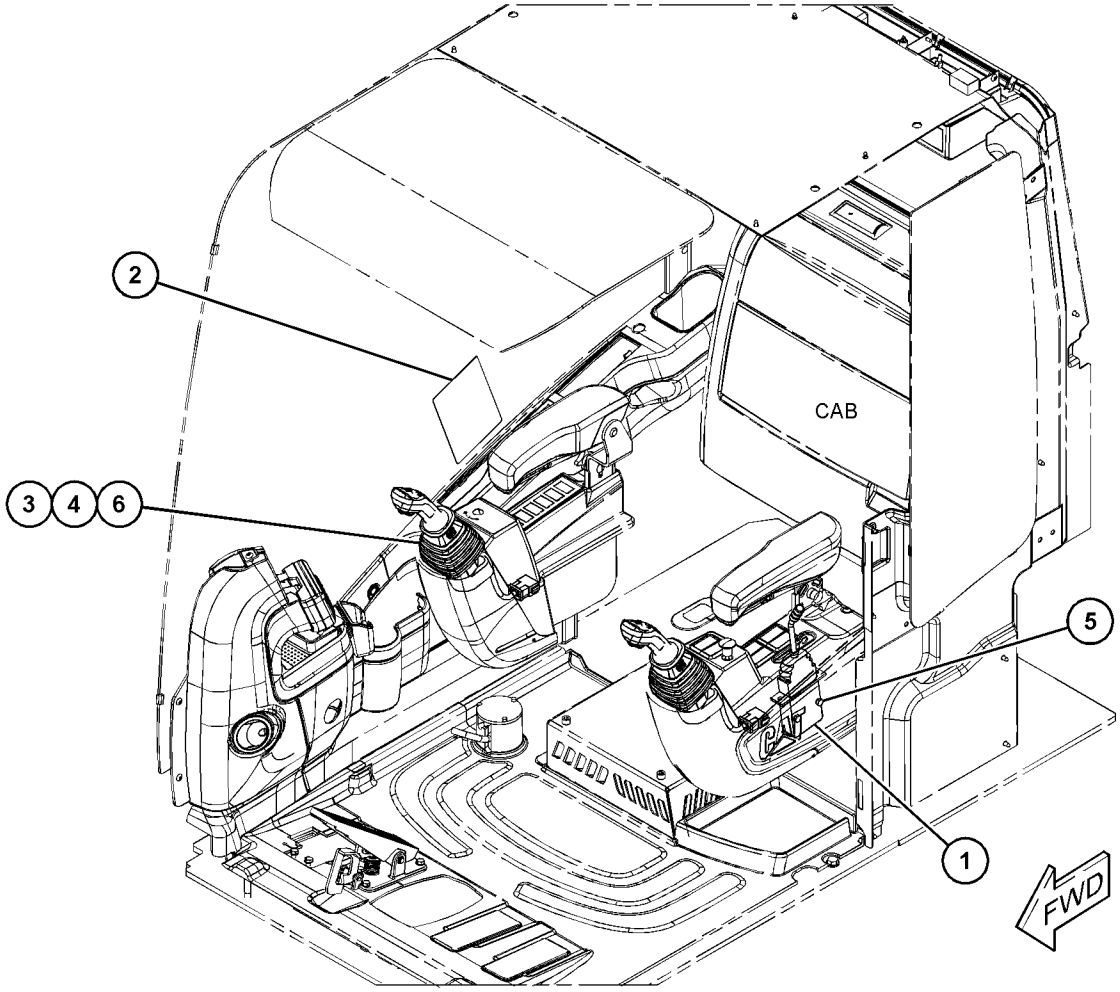

GRAPHIC #1 <END> g06125855

499-0217 CONTROL GP-JOYSTICK

S/N: CH91-UP
PART OF 417-9967 HYDRAULIC AR
AN ATTACHMENT

SMCS-5705 **i06822937**

NOTE	REF NO	GRAPHIC REF	PART NUMBER	QTY	PART NAME 1 2 3 4 5 6 (PRODUCT LEVEL)	SEE PAGE
Y	1	1	**481-9615**	2	CONTROL GP-JOYSTICK	831
Y	2	1	**257-6104**	1	CONTROL GP-HYDRAULIC HAND (STABILIZER BLADE)	825
	3	1	**266-0554**	1	FILM-IDENTIFICATION (JOYSTICK CONTROL)	
M	4	1	**289-4232**	6	BOLT (M6X1X16-MM)	
M	5	1	**8T-4200**	2	BOLT (M8X1.25X16-MM)	
	6	1	**9X-8256**	12	WASHER (6.6X12X2-MM THK)	

M - METRIC PART
Y - SEPARATE ILLUSTRATION

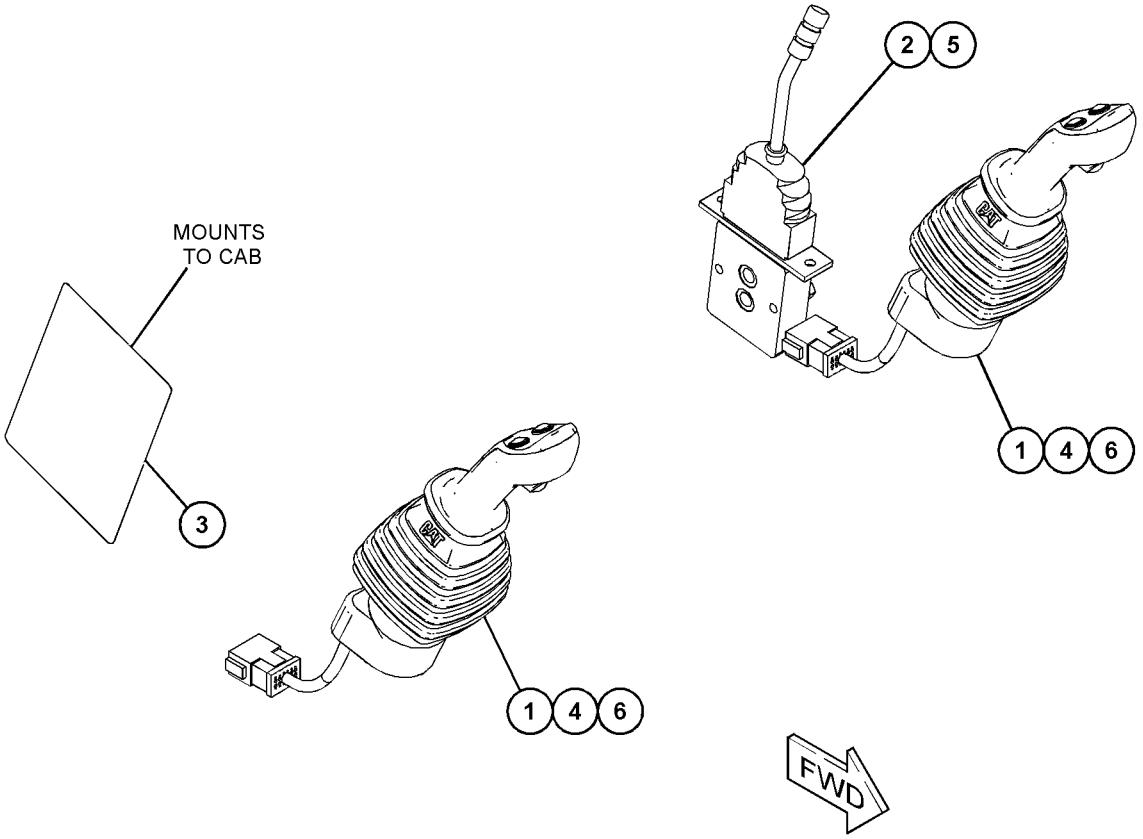

GRAPHIC #1 <END> g06135925

539-6714 CONTROL GP-JOYSTICK

S/N: CH91-UP

PART OF 495-6043, 499-0214, 499-0216 CONTROL GP-JOYSTICK

AN ATTACHMENT

SMCS-5705 **i07434347**

NOTE	REF NO	GRAPHIC REF	PART NUMBER	QTY	PART NAME 1 2 3 4 5 6 (PRODUCT LEVEL)	SEE PAGE
	1	1	**539-6715**	1	CONTROL GP-JOYSTICK	
		1	**8T-8737**	1	PLUG-SEAL	
		1	**9X-3401**	11	PIN-CONNECTOR (16-GA TO 18-GA)	
		1	**174-3091**	1	KIT-RECEPTACLE (12-PIN)	
					(INCLUDES RECEPTACLE AS & WEDGE)	
	2	1	**239-9690**	1	BOOT	
Y	3	1	**243-4046**	1	VALVE GP-PILOT (JOYSTICK)	684
	4	1	**151-4522**	1	KIT-LEVER	
					(INCLUDES LEVER, NUT, PIN-SPRING & SCREW)	

Y - SEPARATE ILLUSTRATION

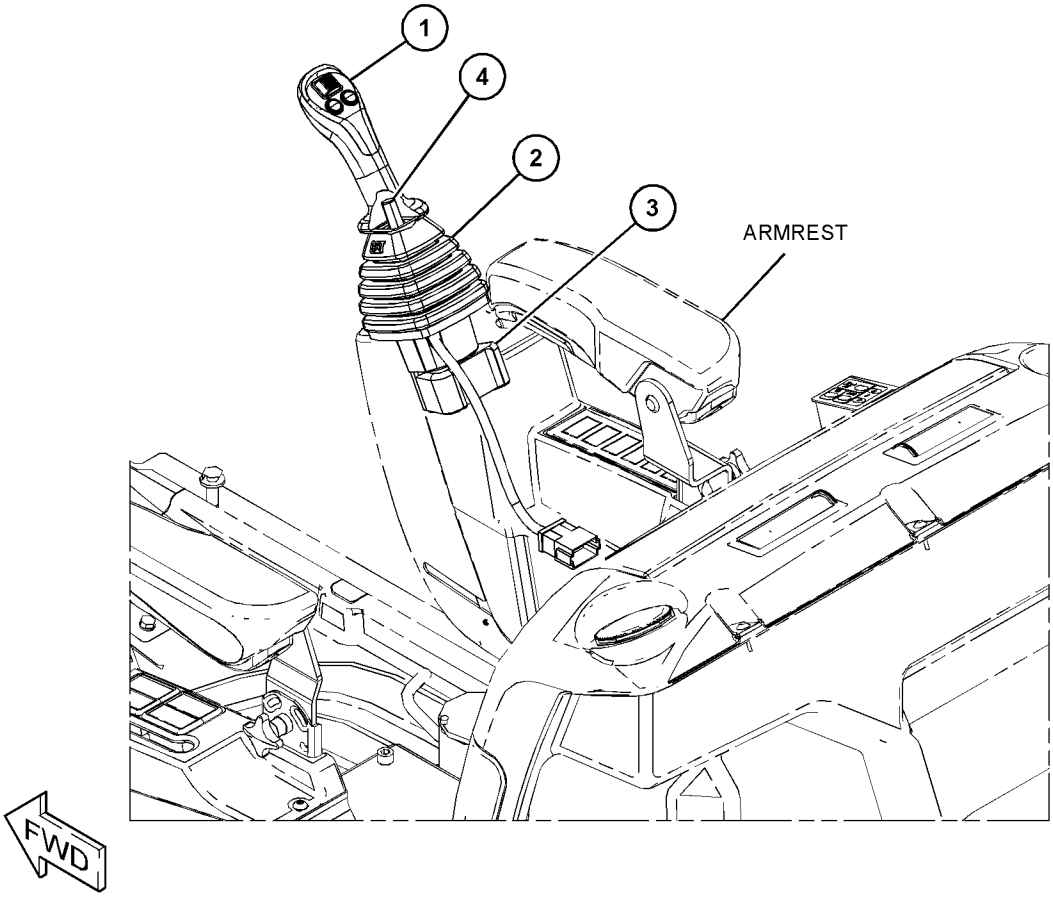

GRAPHIC #1 <END> g06323020

250-9621 CONTROL GP-PEDAL–TRAVEL

S/N: CH91-UP

PART OF 453-8180 CAB AR, 396-4430 CONTROL PEDAL & SEAT AR

AN ATTACHMENT

SMCS-1435, 5702 **i05519731**

NOTE	REF NO	GRAPHIC REF	PART NUMBER	QTY	PART NAME 1 2 3 4 5 6 (PRODUCT LEVEL)	SEE PAGE
	1	1	**102-8802**	1	KIT-RECEPTACLE (2-PIN)	
					(INCLUDES RECEPTACLE AS & WEDGE)	
Y	2	1	**254-2685**	1	CONTROL GP-HYDRAULIC PEDAL (TRAVEL)	828

Y - SEPARATE ILLUSTRATION

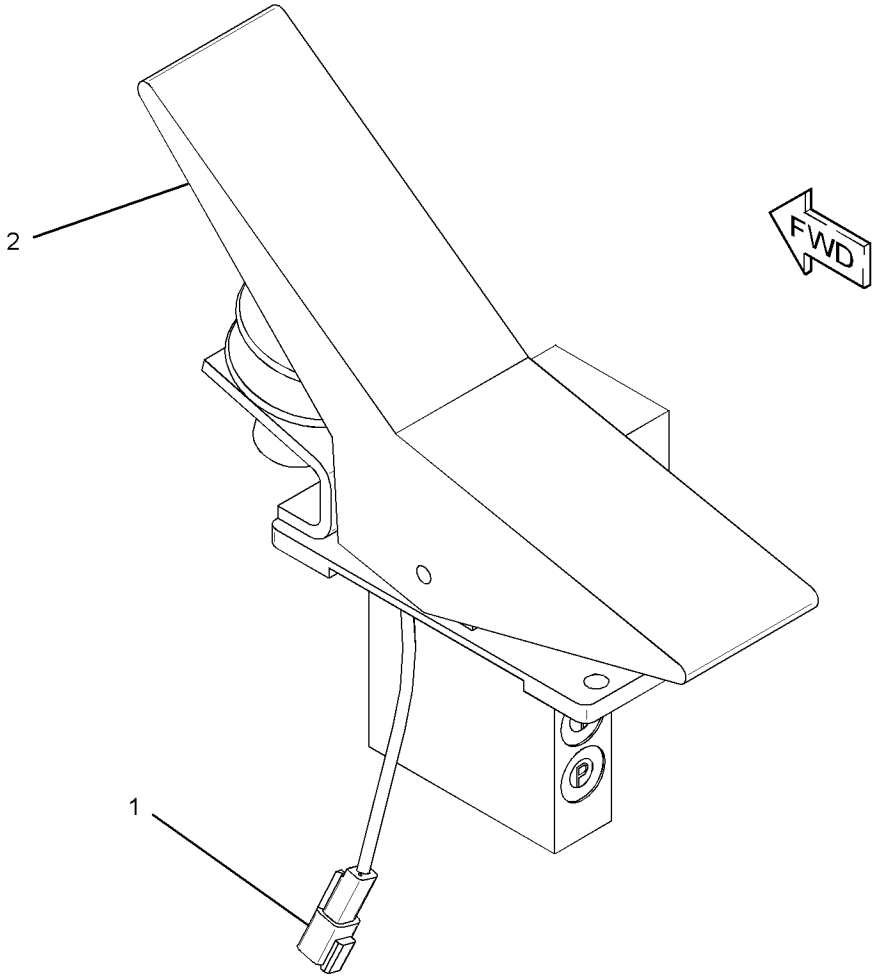

GRAPHIC #1 <END> g01316773

260-5112 CONTROL GP-PILOT OPERATED HYD

S/N: CH91-UP
PART OF 250-9614 CONTROL GP-JOYSTICK
ALSO AN ATTACHMENT

SMCS-5059 **i05496637**

NOTE	REF NO	GRAPHIC REF	PART NUMBER	QTY	PART NAME 1 2 3 4 5 6 (PRODUCT LEVEL)	SEE PAGE
	1	1	**239-9690**	1	BOOT	
Y	2	1	**243-4046**	1	VALVE GP-PILOT (JOYSTICK)	684
	3	1	**249-3948**	1	LEVER (JOYSTICK, RH, LH)	
M	4	1	**095-1207**	1	NUT (M12X1.75-THD)	
	5	1	**117-8683**	1	PIN-SPRING	

M - METRIC PART
Y - SEPARATE ILLUSTRATION

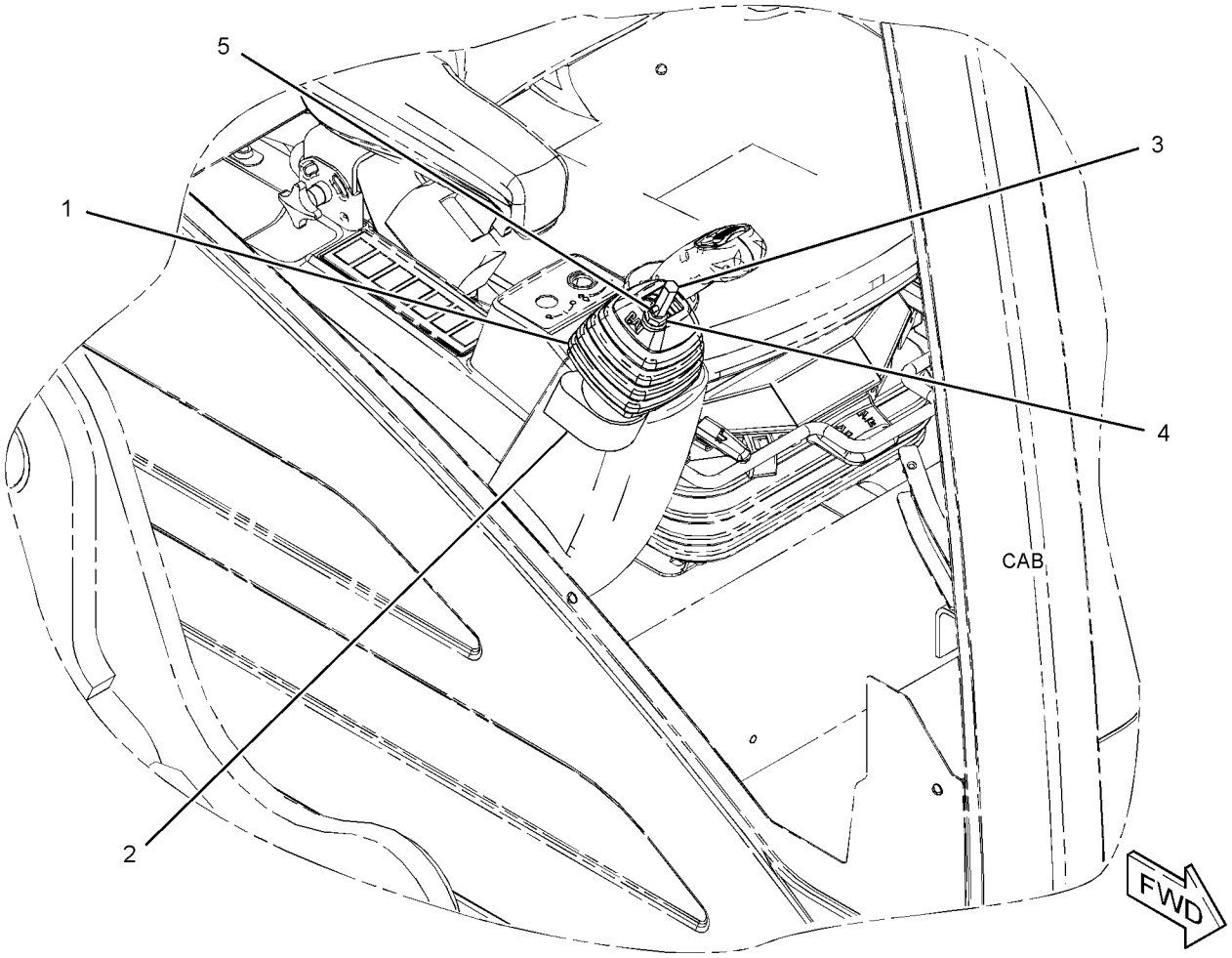

GRAPHIC #1 <END> g01323160

396-4430 CONTROL PEDAL & SEAT AR

S/N: CH91-UP

AN ATTACHMENT

SMCS-3220, 7312, 7338 **i05510522**

NOTE	PART NUMBER	QTY	PART NAME 1 2 3 4 5 6 (PRODUCT LEVEL)	SEE PAGE
Y	*250-9621*	1	CONTROL GP-PEDAL (TRAVEL)	837
Y	**356-1638**	1	SEAT GP-SUSPENSION (COMFORT)	877

Y - SEPARATE ILLUSTRATION

<END>

250-9619 COVER GP-ACCESS—STORAGE

S/N: CH91-UP
PART OF 396-6835 OPERATOR AR
ALSO AN ATTACHMENT

SMCS-726A, 7451 **i05507871**

NOTE	REF NO	GRAPHIC REF	PART NUMBER	QTY	PART NAME 1 2 3 4 5 6 (PRODUCT LEVEL)	SEE PAGE
	1	1	**2M-7819**	1	RING-RETAINING	

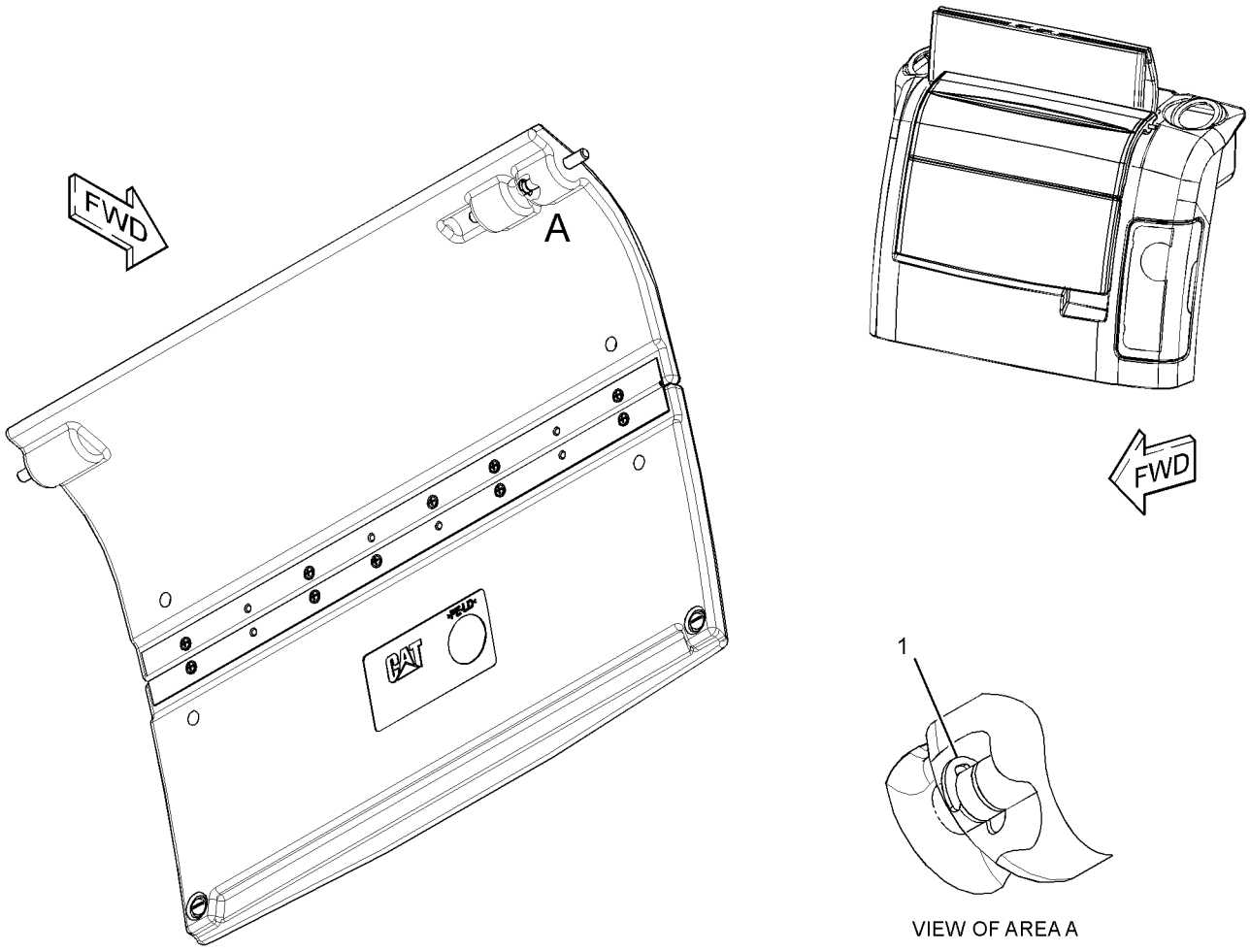

GRAPHIC #1 <END> g01981694

261-3608 COVER GP-PLATFORM

S/N: CH91-UP

PART OF 425-9130 BOOM AR, 453-8185, 473-2841, 517-3262 DISTRIBUTION AR

AN ATTACHMENT

SMCS-7253, 7301 **i05517829**

NOTE	REF NO	GRAPHIC REF	PART NUMBER	QTY	PART NAME 1 2 3 4 5 6 (PRODUCT LEVEL)	SEE PAGE
	1	1	**198-9124**	1	PLATE	
M	2	1	**5W-1341**	4	BOLT-SOCKET HEAD (M8X1.25X16-MM)	

M - METRIC PART

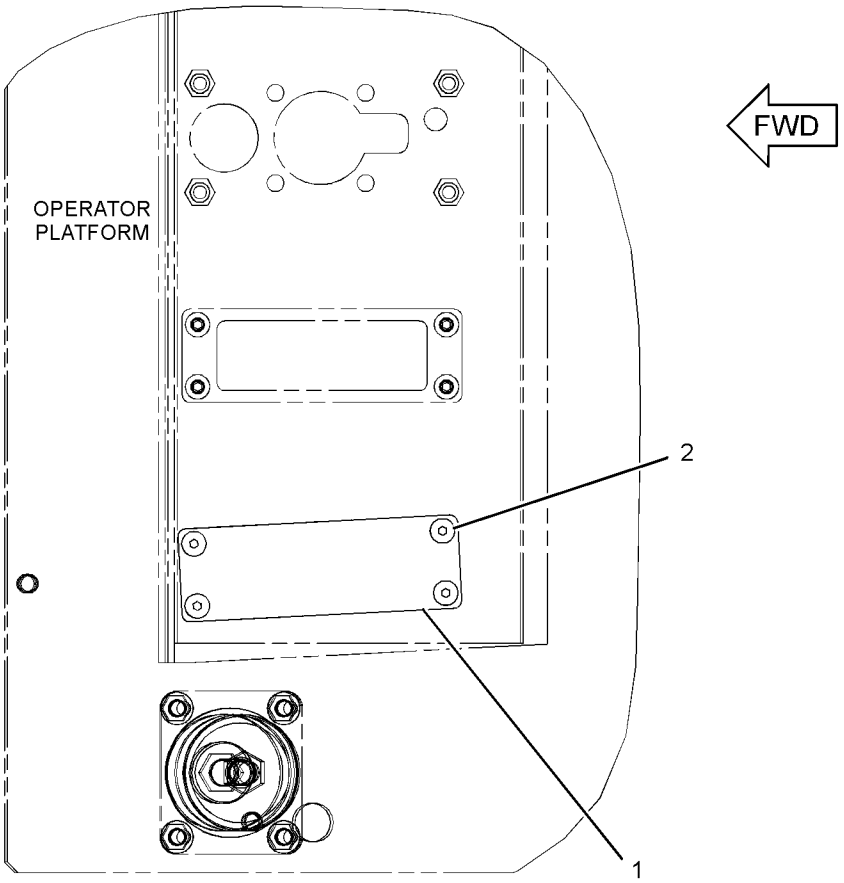

TOP VIEW

GRAPHIC #1 <END> g01351962

420-3151 DOOR & MTG GP-CAB

S/N: CH91-UP
PART OF 427-8448 DOOR GP-CAB
ALSO AN ATTACHMENT

SMCS-7308 **i05968254**

NOTE	REF NO	GRAPHIC REF	PART NUMBER	QTY	PART NAME 1 2 3 4 5 6 (PRODUCT LEVEL)	SEE PAGE
	1	1	**436-1901**	2	HINGE	
	2	1	**425-7079**	1	PANEL AS-DOOR	
M	3	1	**9X-2041**	6	SCREW-TRUSS HEAD (M10X1.5X20-MM)	

M - METRIC PART

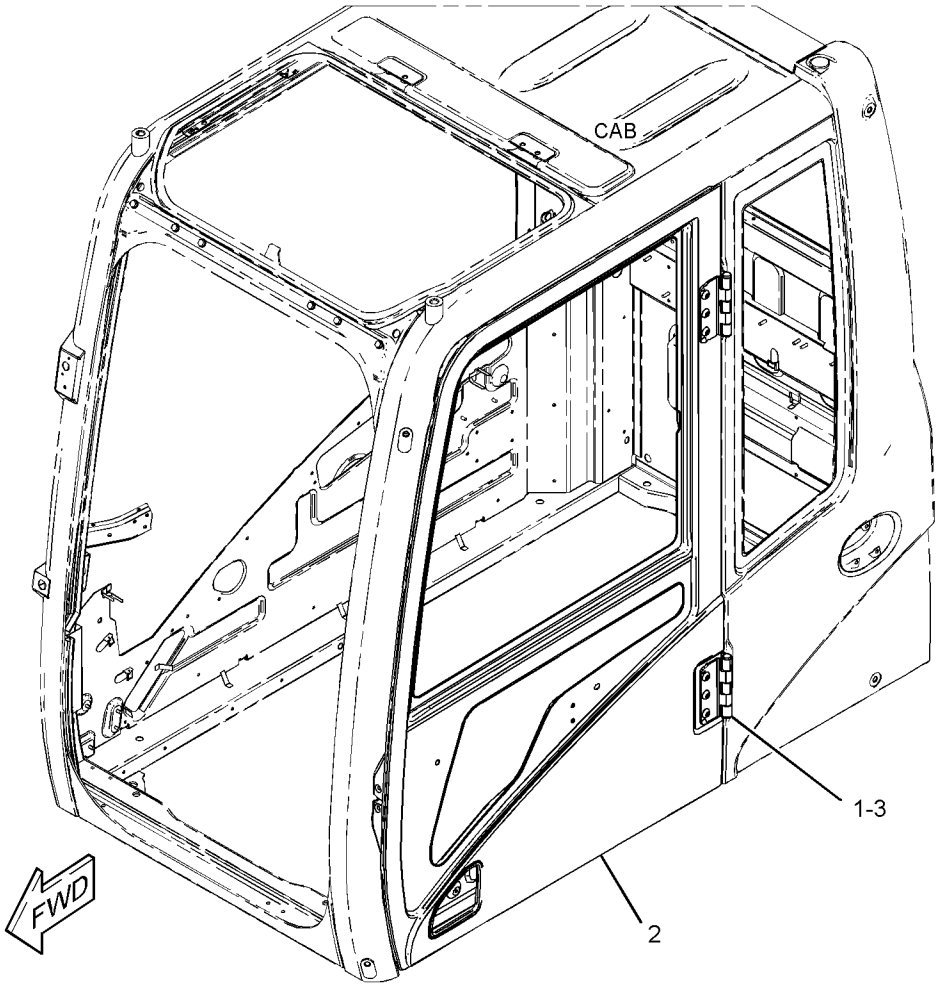

GRAPHIC #1 <END> g03440163

427-8448 DOOR GP-CAB

S/N: CH91-UP
PART OF 426-2270 CAB GP
ALSO AN ATTACHMENT

SMCS-7308 **i05525112**

NOTE	PART NUMBER	QTY	PART NAME 1 2 3 4 5 6 (PRODUCT LEVEL)	SEE PAGE
Y	*420-3151*	1	DOOR & MTG GP-CAB	842
Y	*388-9105*	1	PARTS GP-DOOR (CAB)	867

Y - SEPARATE ILLUSTRATION

<END>

229-9082 DUCT GP-CAB AIR

S/N: CH91-UP
PART OF 396-6835 OPERATOR AR
ALSO AN ATTACHMENT

SMCS-734D **i04625641**

NOTE	REF NO	GRAPHIC REF	PART NUMBER	QTY	PART NAME 1 2 3 4 5 6 (PRODUCT LEVEL)	SEE PAGE
	1	1	**293-1183**	1	FILTER GP-CAB AIR	
		1	**293-1184**	1	FILTER ELEMENT-CAB AIR	
	2	1	**235-8876**	1	DUCT AS (FRESH AIR, UPPER)	
		1	**245-7872**	1	INSULATOR	
	3	1	**235-8877**	1	DUCT AS (VENT, REAR)	
		1	**245-7792**	1	INSULATOR	
	4	1	**235-8878**	1	DUCT AS (VENT, FRONT)	
		1	**245-7793**	1	INSULATOR	
	5	1	**235-8879**	1	DUCT AS (FLOOR)	
		1	**245-7873**	1	INSULATOR	
	6	1	**240-5074**	1	DUCT AS (FRESH AIR, LOWER)	
		1	**245-7791**	1	INSULATOR	
M	7	1	**101-8899**	2	SCREW AS (M6X1.0X16-MM)	
	8	1	**176-1996**	5	CLIP	

M - METRIC PART

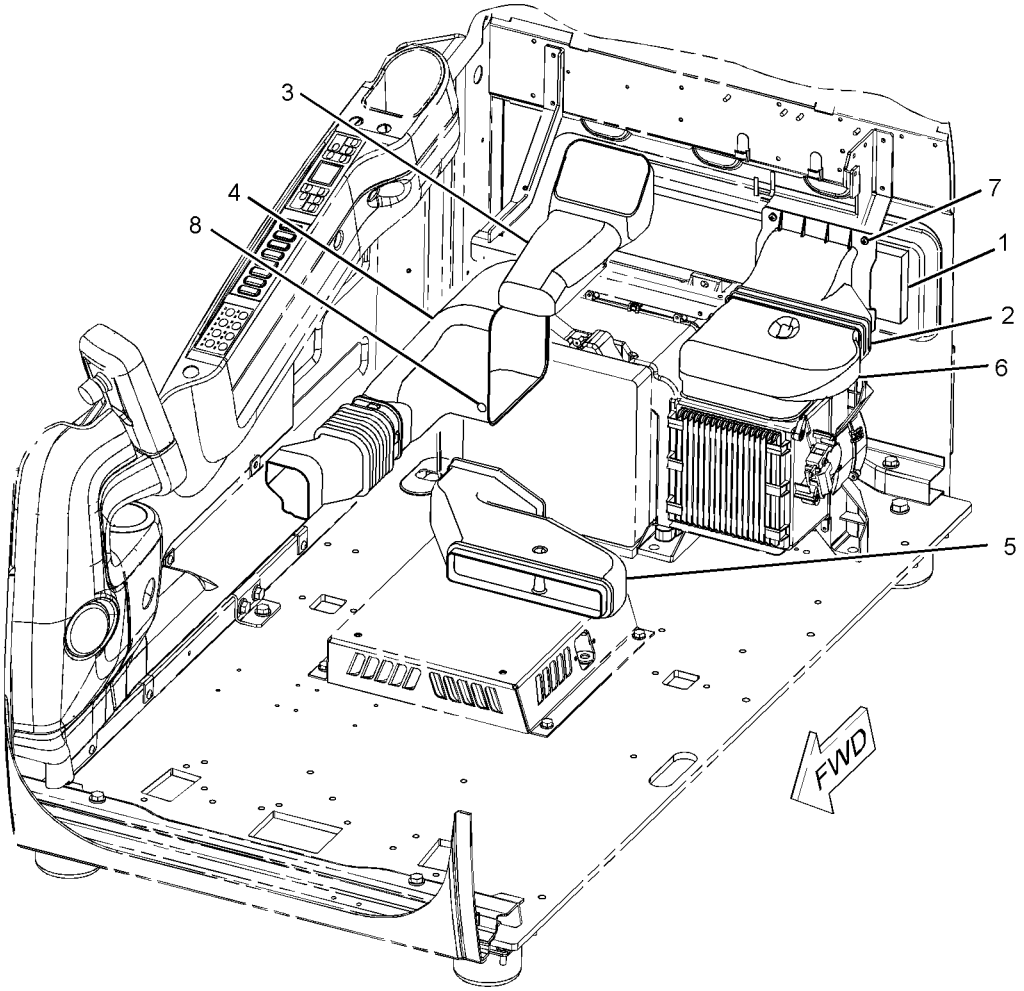

GRAPHIC #1 <END> g01126665

417-9966 GUARD AR-FOG LIGHTS

S/N: CH91-UP

AN ATTACHMENT

SMCS-1429, 7159 **i05815660**

NOTE	PART NUMBER	QTY	PART NAME 1 2 3 4 5 6 (PRODUCT LEVEL)	SEE PAGE
Y	*434-2703*	1	GUARD GP-OVERHEAD	847
Y	*442-8385*	1	GUARD GP-WINDOW	850
Y	*448-9500*	1	LIGHTING GP-FLOOD (CAB GUARD)	172
	455-6807	1	FILM-WARNING (FRONT GUARD, READ OMM)	
	455-6806	1	FILM-WARNING (TOP GUARD, READ OMM)	

Y - SEPARATE ILLUSTRATION

<END>

461-4392 GUARD AR-OVERHEAD

S/N: CH91-UP
CHINA MARKET
AN ATTACHMENT

SMCS-7159 **i05934541**

NOTE	REF NO	GRAPHIC REF	PART NUMBER	QTY	PART NAME 1 2 3 4 5 6 (PRODUCT LEVEL)	SEE PAGE
Y	1	1	*434-2703*	1	GUARD GP-OVERHEAD	847
Y	2	1	*442-8385*	1	GUARD GP-WINDOW	850
Y	3	1	*448-9500*	1	LIGHTING GP-FLOOD (CAB GUARD)	172
	4	1	**459-1889**	1	FILM-WARNING (TOP GUARD, READ OMM)	
	5	1	**459-1890**	1	FILM-WARNING (FRONT GUARD, READ OMM)	

Y - SEPARATE ILLUSTRATION

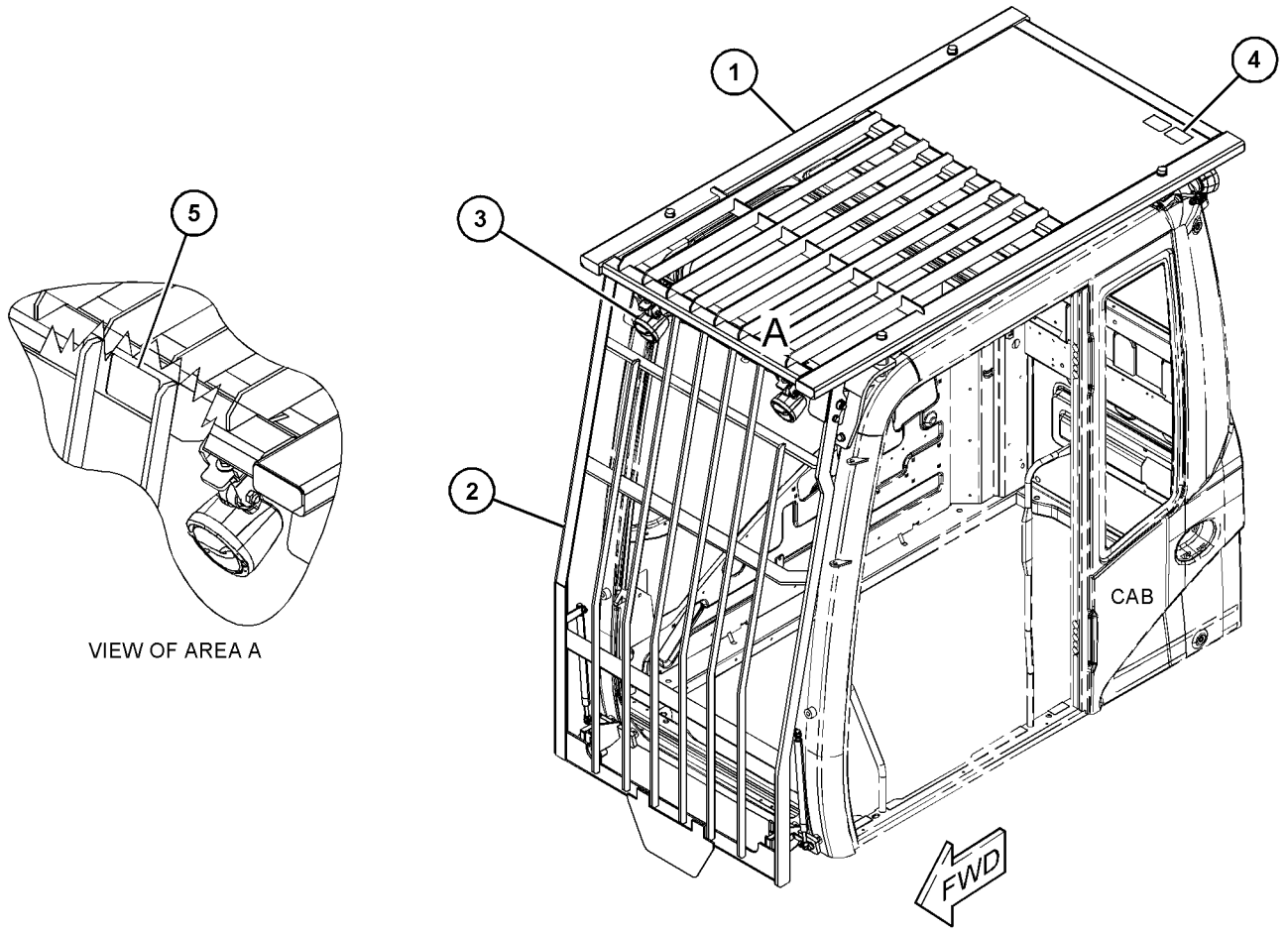

VIEW OF AREA A

GRAPHIC #1 <END> g03737459

434-2703 GUARD GP-OVERHEAD

S/N: CH91-UP

PART OF 417-9966 GUARD AR-FOG LIGHTS, 461-4392 GUARD AR-OVERHEAD

AN ATTACHMENT

SMCS-7159 **i05526061**

NOTE	REF NO	GRAPHIC REF	PART NUMBER	QTY	PART NAME 1 2 3 4 5 6 (PRODUCT LEVEL)	SEE PAGE
	1	1	**219-0305**	1	FILM-WARNING (NO WELD, NO DRILL, READ OMM)	
	2	1	**360-2032**	1	FILM-WARNING (TOP GUARD, READ OMM)	
	3	1	**370-5448**	2	PIPE	
	4	1	**431-9082**	1	GUARD AS	
	5	1	**431-9095**	2	PIPE	
M	6	1	**7X-2556**	2	BOLT (M16X2X100-MM)	
M	7	1	**7X-2557**	2	BOLT (M16X2X140-MM)	
	8	1	**9X-8257**	6	WASHER (17.5X30X3.5-MM THK)	

M - METRIC PART

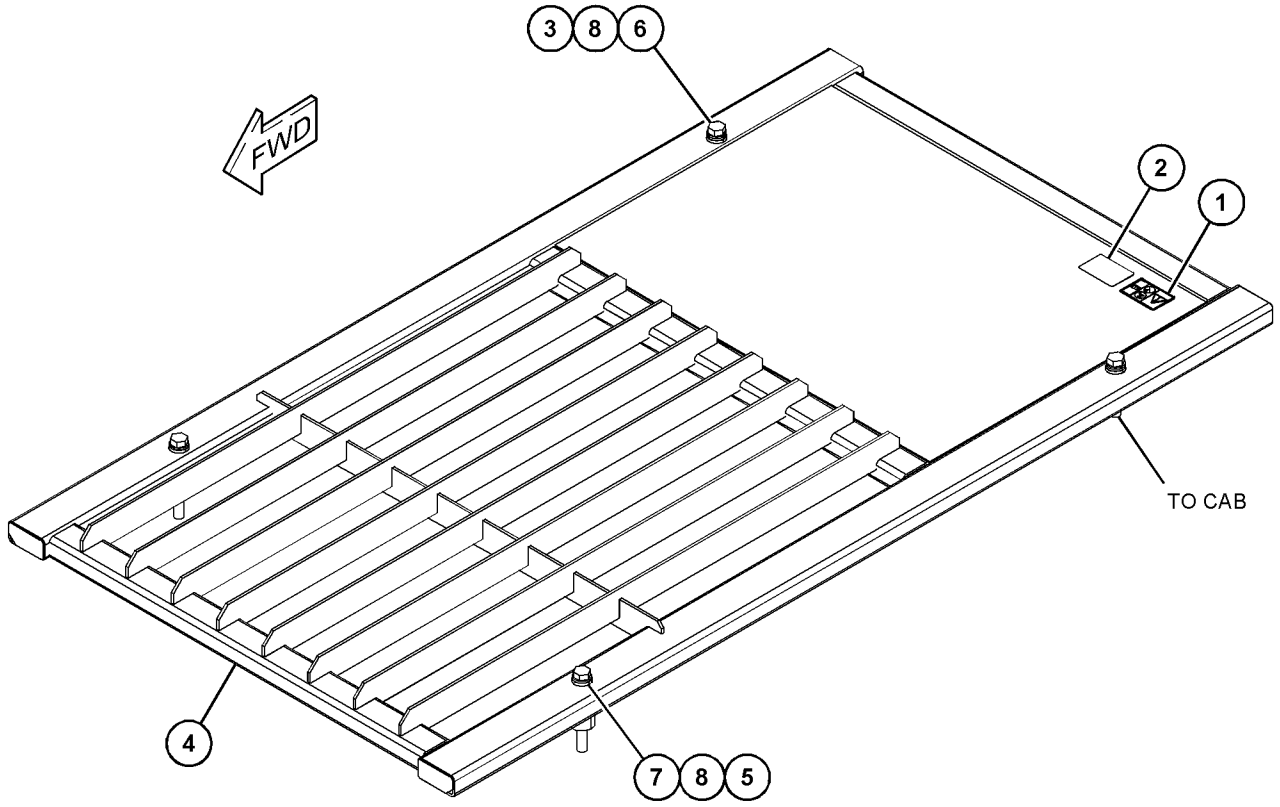

GRAPHIC #1 <END> g03506291

444-3851 GUARD GP-VANDALISM

S/N: CH91-UP

AN ATTACHMENT

SMCS-7315 **i05510191**

NOTE	REF NO	GRAPHIC REF	PART NUMBER	QTY	PART NAME 1 2 3 4 5 6 (PRODUCT LEVEL)	SEE PAGE
	1	1	**197-5688**	1	BRACKET	
	2	1	**197-5689**	1	PLATE	
	3	1	**197-5690**	1	PLATE	
	4	1	**213-4636**	1	COVER AS	
M		1	**8T-4908**	2	BOLT (M8X1.25X25-MM)	
	5	1	**216-2178**	2	BOLT	
	6	1	*216-2180*	1	GUARD AS	
		1	**4B-4863**	8	WASHER (4.7X11X1.2-MM THK)	
M		1	**6S-8584**	8	SCREW (M4X0.7-THD)	
M		1	**8T-2659**	8	LOCKNUT (M4X0.7-THD)	
	7	1	**218-2619**	2	LATCH	
	8	1	**432-2226**	2	BRACKET	
M	9	1	**3T-0852**	2	LOCKNUT (M8X1.25-THD)	
	10	1	**4B-4863**	6	WASHER (4.7X11X1.2-MM THK)	
M	11	1	**5C-2890**	2	NUT (M6X1-THD)	
M	12	1	**5C-8312**	6	NUT (M4X0.7-THD)	
M	13	1	**6V-5210**	6	SCREW-MACHINE (M4X0.7X10-MM)	
	14	1	**7X-0605**	4	WASHER-HARD (13X28X1.6-MM THK)	
M	15	1	**8T-4138**	1	BOLT (M6X1X20-MM)	
M	16	1	**8T-4179**	4	BOLT (M12X1.75X20-MM)	
	17	1	**8T-4224**	4	WASHER-HARD (8.8X16X2-MM THK)	
	18	1	**9X-6381**	1	WASHER (6.5X12.5X1.6-MM THK)	
J	19	1	**6V-5654**	3	SEAL (1.5-DM EACH)	
B	20	1	**117-0121**		SEAL	

B - USE AS REQUIRED
J - ORDER BY THE DECIMETER
M - METRIC PART

444-3851 **GUARD GP-VANDALISM** (contd.) **i05510191**

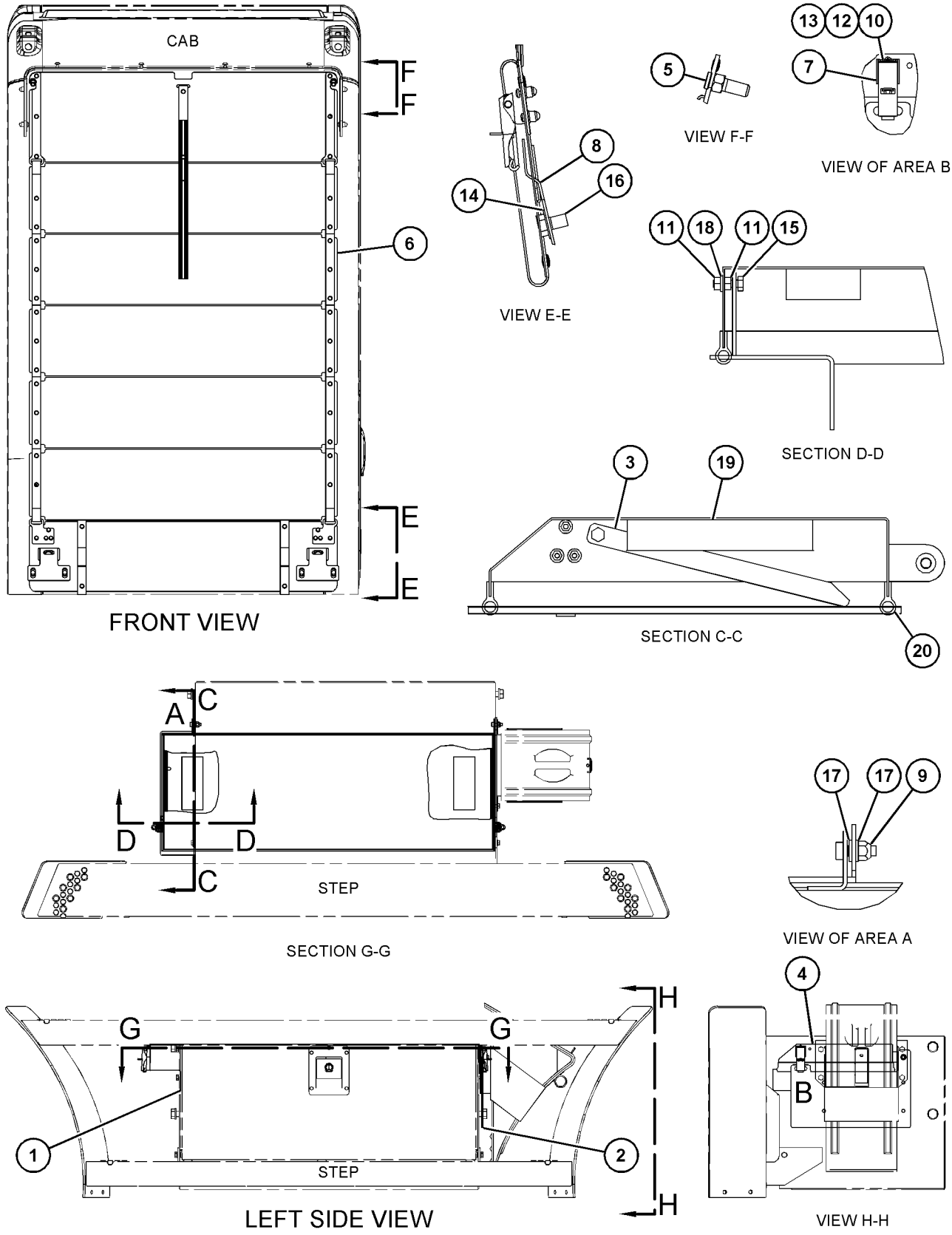

GRAPHIC #1 <END> g03512896

442-8385 GUARD GP-WINDOW

S/N: CH91-UP

PART OF 417-9966 GUARD AR-FOG LIGHTS, 461-4392 GUARD AR-OVERHEAD

AN ATTACHMENT

TYPE 1

SMCS-7182, 7315 **i05527859**

NOTE	REF NO	GRAPHIC REF	PART NUMBER	QTY	PART NAME 1 2 3 4 5 6 (PRODUCT LEVEL)	SEE PAGE
	1	1	**115-1624**	2	SPRING AS-GAS (GUARD, FRONT)	
	2	1	**219-0305**	1	FILM-WARNING (NO WELD, NO DRILL, READ OMM)	
	3	1	**262-7954**	2	BUMPER	
	4	1	**360-2033**	1	FILM-WARNING (FRONT GUARD, READ OMM)	
	5	1	**370-5468**	1	LATCH AS (LH)	
	6	1	**370-5469**	1	LATCH AS (RH)	
	7	1	**370-5480**	1	BRACKET AS (RH)	
	8	1	**370-5481**	1	BRACKET AS (LH)	
	9	1	**370-5487**	2	BUSHING	
M	10	1	**370-5488**	2	BOLT (M12X1.75X14-MM)	
	11	1	**370-5502**	1	GUARD AS	
M		1	**8T-3490**	1	NUT-WELD (M10X1.5-THD)	
M		1	**8T-3597**	2	NUT-WELD (M12X1.75-THD)	
	12	1	**442-7756**	1	BRACKET AS	
	13	1	**442-8384**	1	BRACKET AS	
M	14	1	**210-8236**	4	SCREW (M8X1.25X35-MM)	
M	15	1	**5C-7261**	6	NUT (M8X1.25-THD)	
M	16	1	**7X-2554**	2	BOLT (M16X2X70-MM)	
M	17	1	**7Y-0623**	2	LOCKNUT (M16X2-THD)	
	18	1	**8T-4167**	4	WASHER-HARD (26X44X4-MM THK)	
	19	1	**8T-4223**	6	WASHER-HARD (13.5X25.5X3-MM THK)	
	20	1	**8T-4224**	6	WASHER-HARD (8.8X16X2-MM THK)	
M	21	1	**8T-4956**	6	BOLT (M12X1.75X35-MM)	
	22	1	**9X-8257**	4	WASHER (17.5X30X3.5-MM THK)	

M - METRIC PART

442-8385 **GUARD GP-WINDOW (**contd.**)** **i05527859**

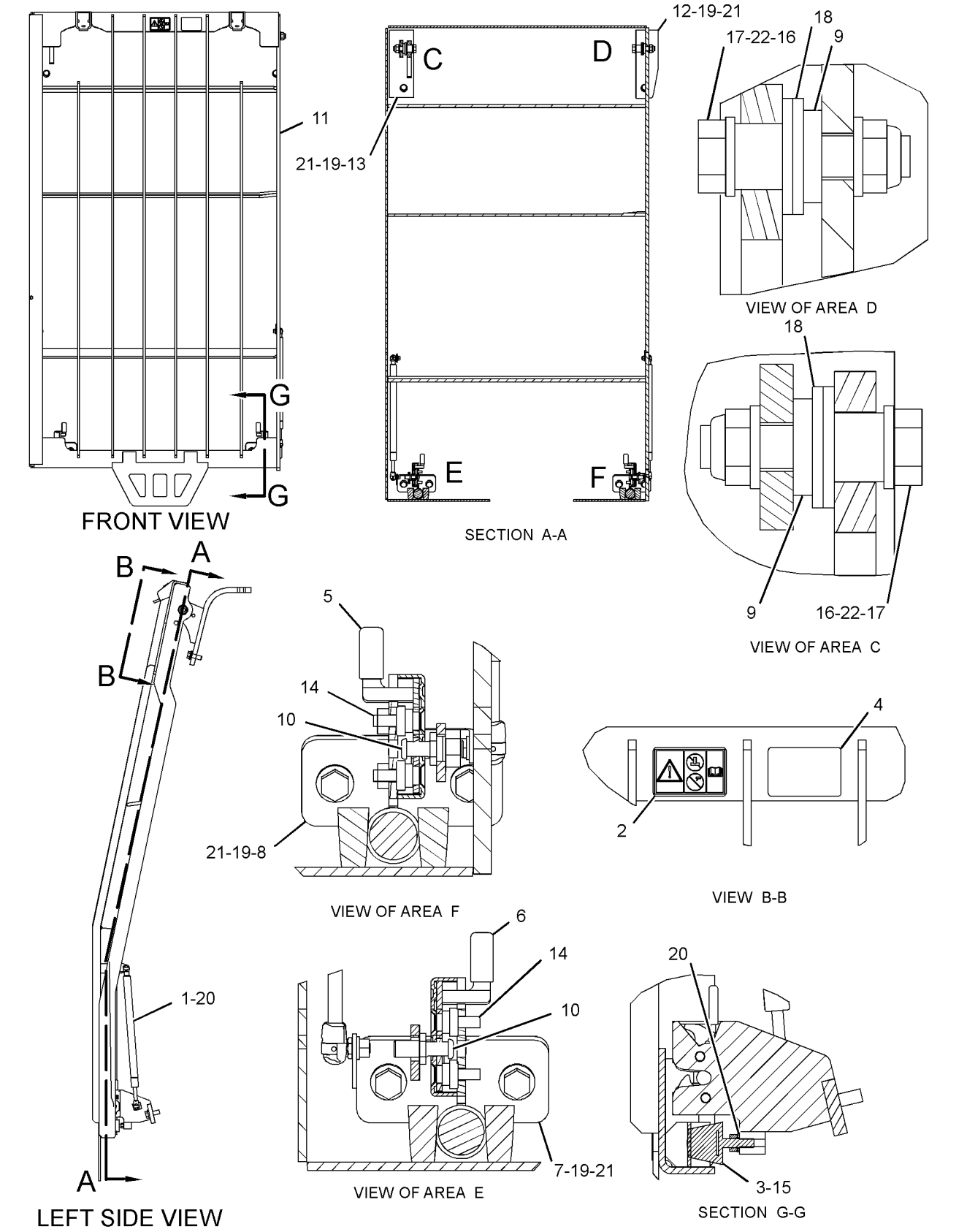

GRAPHIC #1 <END> g03510177

442-8385 GUARD GP-WINDOW

S/N: CH91-UP

PART OF 417-9966 GUARD AR-FOG LIGHTS, 461-4392 GUARD AR-OVERHEAD

AN ATTACHMENT

TYPE 2

SMCS-7182, 7315 **i06237223**

NOTE	REF NO	GRAPHIC REF	PART NUMBER	QTY	PART NAME 1 2 3 4 5 6 (PRODUCT LEVEL)	SEE PAGE
	1	1	**115-1624**	2	SPRING AS-GAS (GUARD, FRONT)	
	2	1	**219-0305**	1	FILM-WARNING (NO WELD, NO DRILL, READ OMM)	
	3	1	**262-7954**	2	BUMPER	
	5	1	**370-5468**	1	LATCH AS (LH)	
	6	1	**370-5469**	1	LATCH AS (RH)	
	7	1	**370-5480**	1	BRACKET AS (RH)	
	8	1	**370-5481**	1	BRACKET AS (LH)	
	9	1	**370-5487**	2	BUSHING	
M	10	1	**370-5488**	2	BOLT (M12X1.75X14-MM)	
	11	1	**370-5502**	1	GUARD AS	
M		1	**8T-3597**	2	NUT-WELD (M12X1.75-THD)	
	12	1	**442-7756**	1	BRACKET AS	
	13	1	**442-8384**	1	BRACKET AS	
M	14	1	**210-8236**	4	SCREW (M8X1.25X35-MM)	
M	15	1	**5C-7261**	6	NUT (M8X1.25-THD)	
M	16	1	**7X-2554**	2	BOLT (M16X2X70-MM)	
M	17	1	**7Y-0623**	2	LOCKNUT (M16X2-THD)	
	18	1	**8T-4167**	4	WASHER-HARD (26X44X4-MM THK)	
	19	1	**8T-4223**	6	WASHER-HARD (13.5X25.5X3-MM THK)	
	20	1	**8T-4224**	6	WASHER-HARD (8.8X16X2-MM THK)	
M	21	1	**8T-4956**	6	BOLT (M12X1.75X35-MM)	
	22	1	**9X-8257**	4	WASHER (17.5X30X3.5-MM THK)	

M - METRIC PART

442-8385 **GUARD GP-WINDOW (**contd.**)** **i06237223**

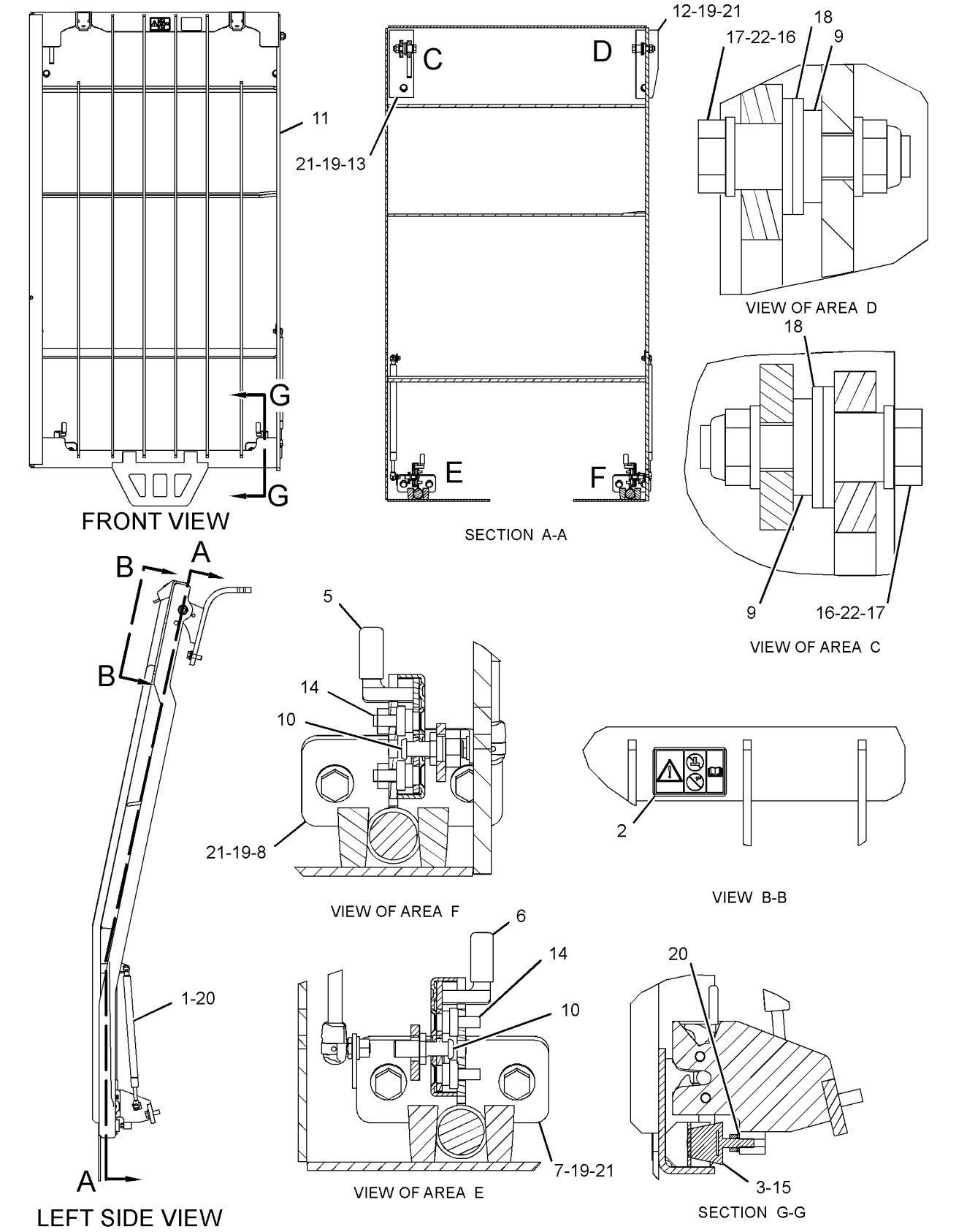

GRAPHIC #1 <END> g03867057

186-0484 HORN GP-ELECTRIC

S/N: CH91-UP
24-VOLT, HIGH TONE
PART OF 396-4423 ELECTRICAL AR
ALSO AN ATTACHMENT

SMCS-7402 **i05558146**

NOTE	REF NO	GRAPHIC REF	PART NUMBER	QTY	PART NAME 1 2 3 4 5 6 (PRODUCT LEVEL)	SEE PAGE
M	1	1	**8T-4136**	1	BOLT (M10X1.5X25-MM)	
	2	1	**174-7875**	1	HORN AS (24-VOLT, HIGH TONE)	
		1	**177-9853**	1	RECEPTACLE AS (2-PIN)	
		1	**178-3586**	1	LOCK	
	3	1	**8T-4121**	1	WASHER-HARD (11X21X2.5-MM THK)	

M - METRIC PART

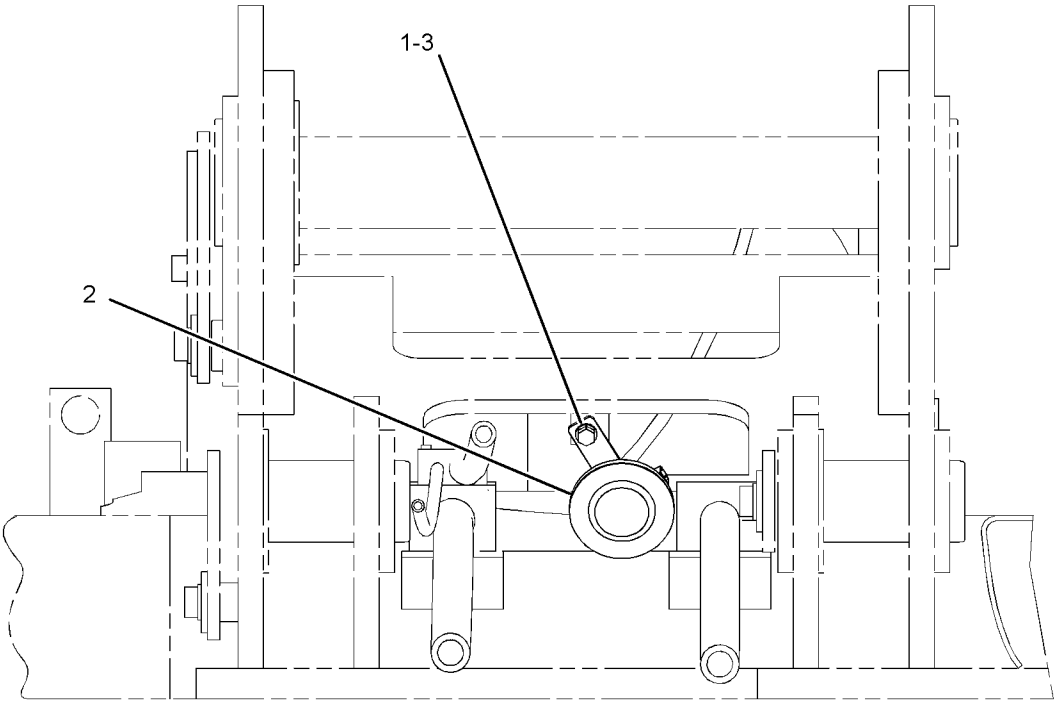

FRONT VIEW

GRAPHIC #1 <END> g01365074

431-9110 INSTALLATION GP-RADIO

S/N: CH91-UP
PART OF 431-9097 ELECTRICAL AR
ALSO AN ATTACHMENT

SMCS-7338 **i05526060**

NOTE	REF NO	GRAPHIC REF	PART NUMBER	QTY	PART NAME 1 2 3 4 5 6 (PRODUCT LEVEL)	SEE PAGE
M	1	1	**099-7127**	8	SCREW-MACHINE (M4X0.7X12-MM)	
	2	1	**121-0987**	1	SOCKET-AUXILIARY POWER (12-VOLT, 7-AMPERE)	
	3	1	**201-4014**	1	SWITCH AS-ROCKER (RADIO ON, OFF)	
		1	**111-7899**	1	GASKET	
	4	1	**263-9441**	1	SPEAKER AS (RH)	
	4A	1	**263-9441**	1	SPEAKER AS (LH)	
	5	1	**333-1451**	1	CONVERTER (24-VOLT TO 12-VOLT)	
	6	1	**431-9113**	1	PLATE	
	7	1	**431-9114**	2	PLATE	
	8	1	**096-6166**	16	WASHER-HARD (4.5X9X1-MM THK)	
M	9	1	**192-4522**	2	SCREW-FLAT HEAD (M5X0.8X20-MM)	
M	10	1	**5C-2874**	2	NUT (M5X0.8-THD)	
M	11	1	**5C-8312**	8	NUT (M4X0.7-THD)	
M	12	1	**6V-5210**	8	SCREW-MACHINE (M4X0.7X10-MM)	
	13	1	**8T-0328**	4	WASHER-HARD (5.5X10X1-MM THK)	
M	14	1	**8T-6693**	2	SCREW-MACHINE (M5X0.8X16-MM)	

M - METRIC PART

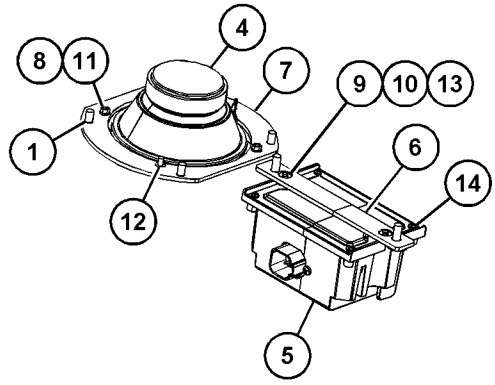

VIEW OF AREA A

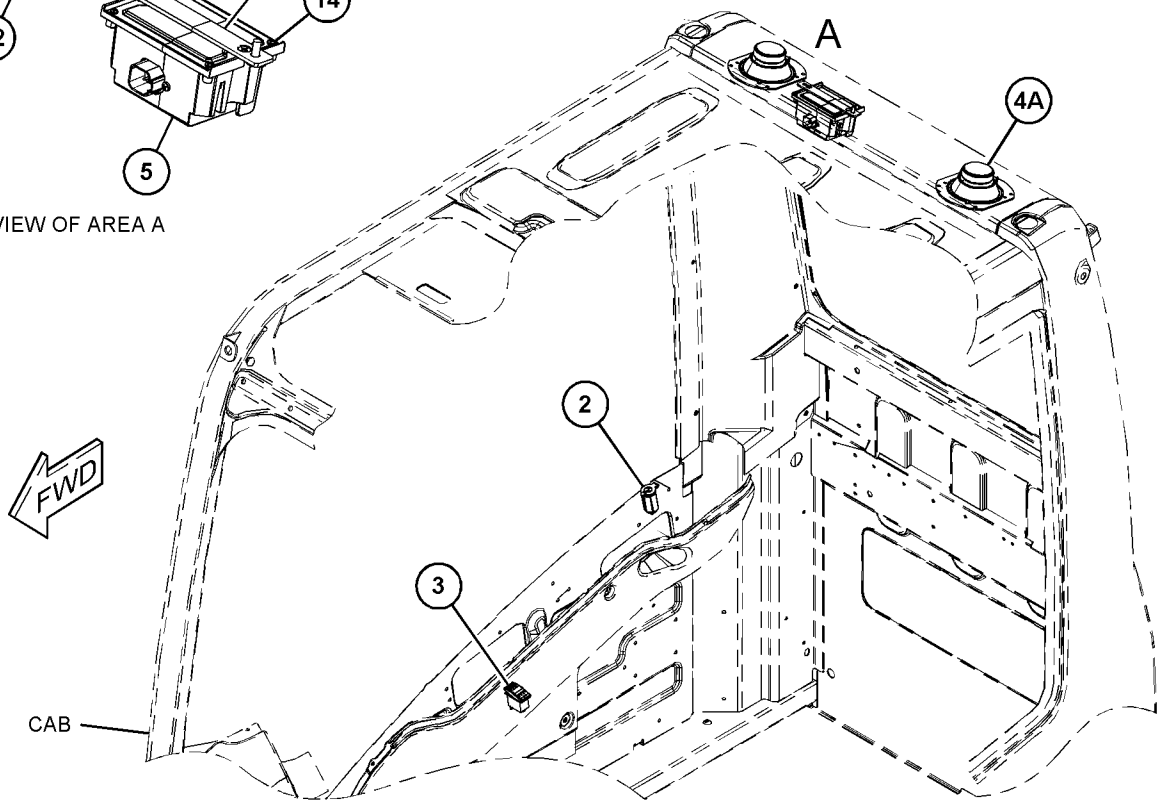

GRAPHIC #1 <END> g03512996

164-0528 LEVER GP-CAB DOOR

S/N: CH91-UP
PART OF 426-2267 TRIM GP-CAB
ALSO AN ATTACHMENT

SMCS-7308 **i02536658**

NOTE	REF NO	GRAPHIC REF	PART NUMBER	QTY	PART NAME 1 2 3 4 5 6 (PRODUCT LEVEL)	SEE PAGE
	1	1	**156-6642**	1	LEVER AS	
	2	1	**164-0664**	1	BRACKET	
	3	1	**176-1941**	1	PIN	
	4	1	**185-8280**	1	WASHER-WAVE (10.5X15X0.3-MM THK)	
	5	1	**185-8281**	1	SPRING	

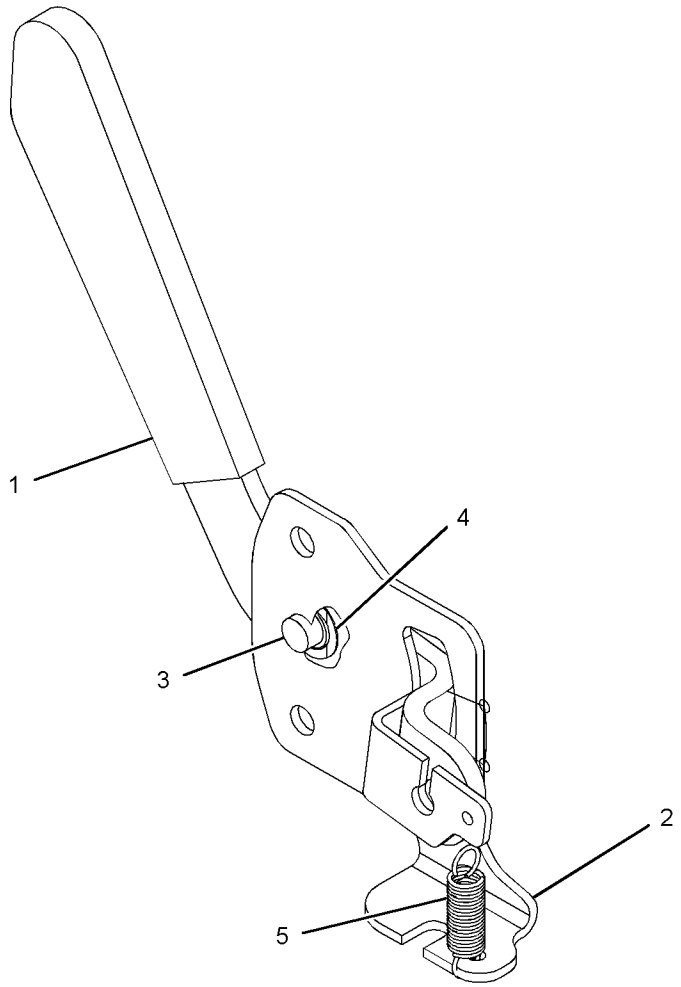

GRAPHIC #1 <END> g01217036

250-9616 LINES GP-AIR CONDITIONER

S/N: CH91-UP

PART OF 466-9070, 466-9093 AIR CONDITIONER AR

ALSO AN ATTACHMENT

SMCS-1808 **i05496664**

NOTE	REF NO	GRAPHIC REF	PART NUMBER	QTY	PART NAME 1 2 3 4 5 6 (PRODUCT LEVEL)	SEE PAGE
	1	1	**122-9657**	2	CLAMP	
	2	1	**130-0252**	2	HOSE-DRAIN	
	3	1	**130-0270**	1	SWITCH AS-PRESSURE (REFRIGERANT)	
		1	**185-8293**	1	SEAL-O-RING	
	4	1	**176-1902**	1	DRYER AS-REFRIGERANT (RECEIVER)	
	5	1	**235-8891**	1	PLATE	
	6	1	**343-9724**	1	HOSE AS	
		1	**121-7138**	2	SEAL-O-RING	
	7	1	**253-6922**	1	HOSE AS	
		1	**281-4482**	1	KIT-VALVE	
					(INCLUDES VALVE & CAP)	
		1	**121-7137**	1	SEAL-O-RING	
	8	1	**253-6923**	1	HOSE AS	
		1	**281-4483**	1	KIT-VALVE	
					(INCLUDES VALVE & CAP)	
		1	**121-7136**	1	SEAL-O-RING	
	9	1	**334-6621**	1	HOSE AS	
		1	**121-7138**	2	SEAL-O-RING	
	10	1	**264-3542**	1	GROMMET	
	11	1	**284-9959**	1	FILM-INSTRUCTION (AIR CONDITIONER, READ OMM)	
B	12	1	**3S-2093**	10	STRAP-CABLE	
	13	1	**121-7098**	1	BRACKET AS	
M		1	**8T-4138**	2	BOLT (M6X1X20-MM)	
		1	**9X-8256**	2	WASHER (6.6X12X2-MM THK)	
M	14	1	**6V-7357**	3	BOLT (M6X1X25-MM)	
M	15	1	**8T-4200**	2	BOLT (M8X1.25X16-MM)	
	16	1	**8T-4224**	2	WASHER-HARD (8.8X16X2-MM THK)	
M	17	1	**8T-4971**	2	BOLT (M6X1X30-MM)	
	18	1	**9X-8256**	5	WASHER (6.6X12X2-MM THK)	
B	19	1	**290-5562**	2	MOUNT (DUAL SWIVEL)	
	20	1	**204-2281**	2	STRAP-CABLE	
	21	1	**200-6345**	1	SADDLE-MOUNTING (DUAL SWIVEL)	

B - USE AS REQUIRED
M - METRIC PART

250-9616 **LINES GP-AIR CONDITIONER (**contd.**)** **i05496664**

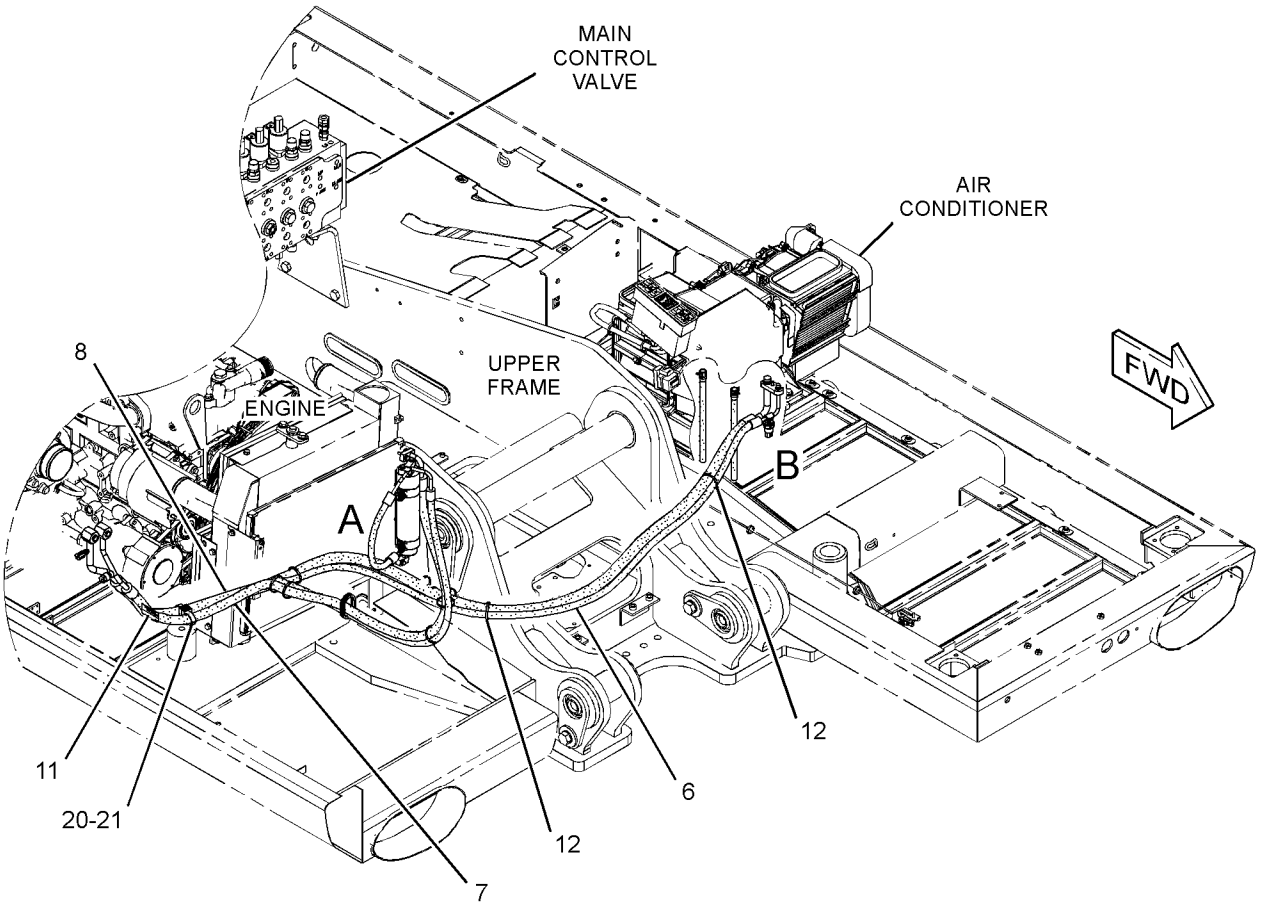

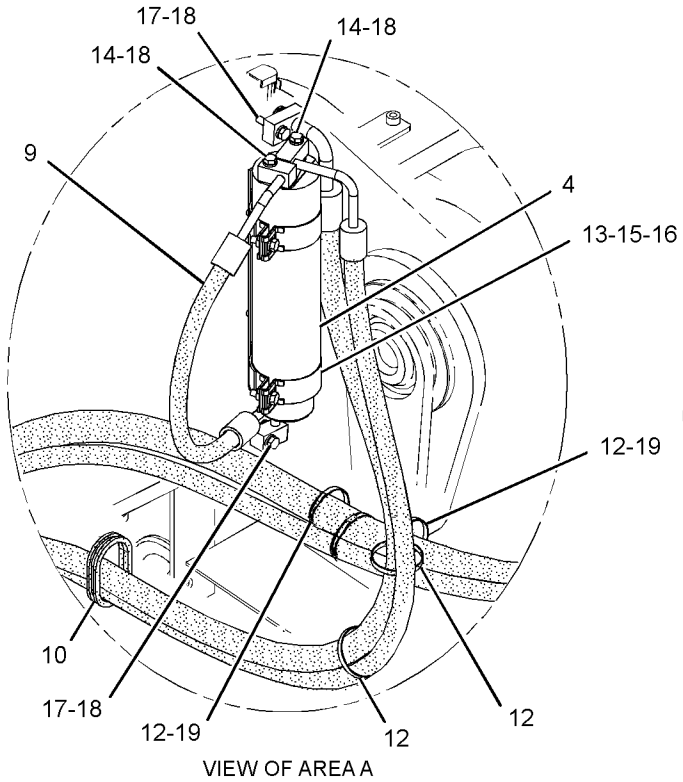

VIEW OF AREA A

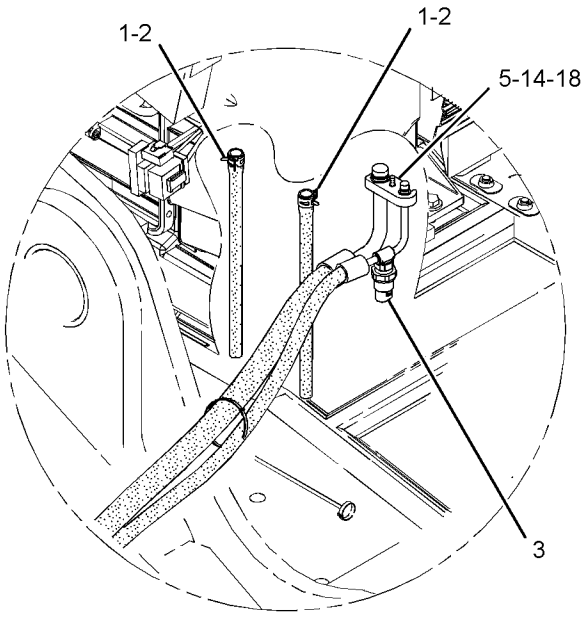

VIEW OF AREA B

GRAPHIC #1 <END> g02020757

250-9615 LINES GP-HEATER

S/N: CH91-UP
PART OF 466-9070, 466-9093 AIR CONDITIONER AR
ALSO AN ATTACHMENT

SMCS-1812, 7304 **i05510290**

NOTE	REF NO	GRAPHIC REF	PART NUMBER	QTY	PART NAME 1 2 3 4 5 6 (PRODUCT LEVEL)	SEE PAGE
	1	1	**235-9014**	4	CLAMP-SPRING	
	2	1	**3E-4321**	1	CLIP (LOOP)	
	3	1	**8T-4121**	1	WASHER-HARD (11X21X2.5-MM THK)	
M	4	1	**8T-4191**	1	BOLT (M10X1.5X16-MM)	
E	5	1	**5P-0767**		HOSE (260-CM)	
E	5A	1	**5P-0767**		HOSE (240-CM)	

E - ORDER BY THE CENTIMETER
M - METRIC PART

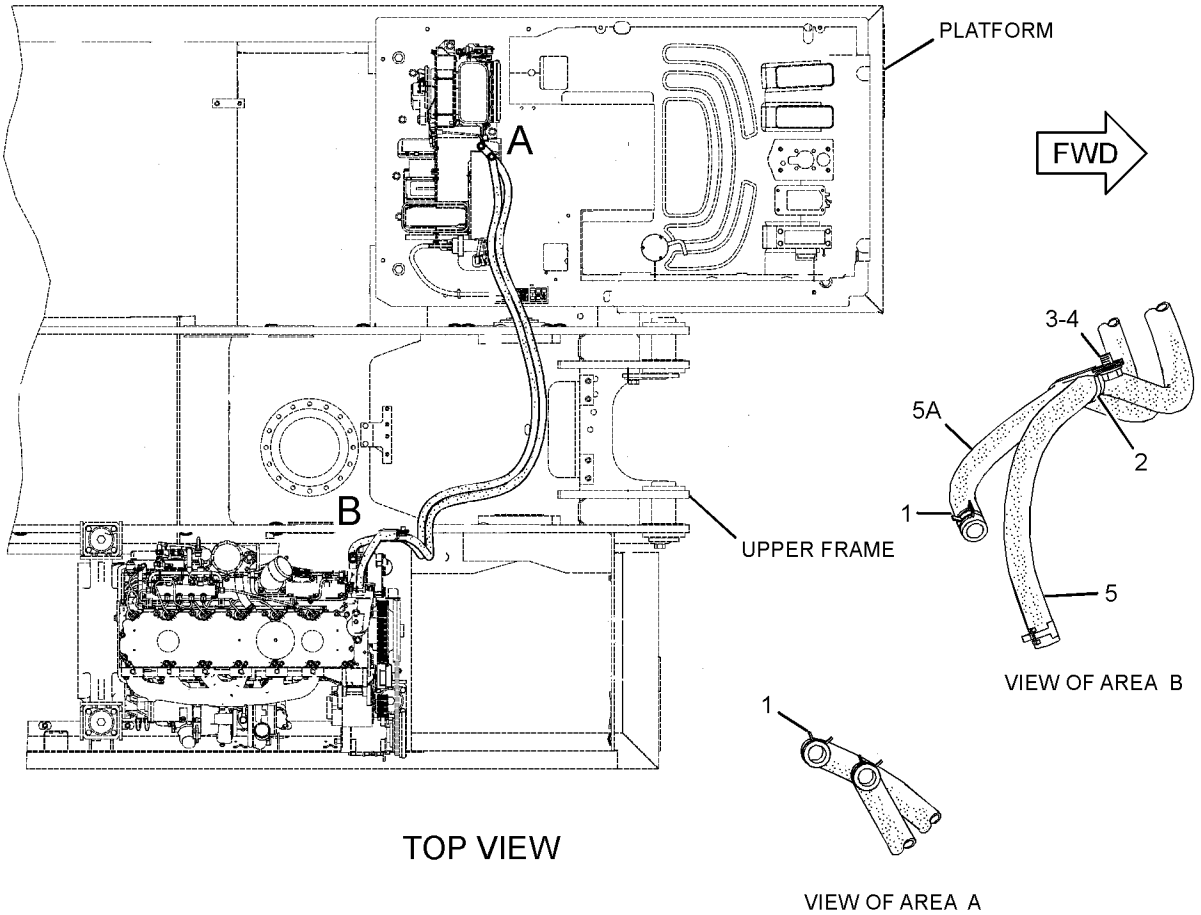

GRAPHIC #1 <END> g01319492

111-1857 LITERATURE GP

S/N: CH91-UP
PART OF 449-2824 CHASSIS AR
ALSO AN ATTACHMENT

SMCS-7300 **i05513293**

NOTE	PART NUMBER	QTY	PART NAME 1 2 3 4 5 6 (PRODUCT LEVEL)	SEE PAGE
	099-3645	1	CABLE-LANYARD	
	5P-7958	2	SLEEVE-CABLE SPLICE	

<END>

333-0120 MIRROR GP-REAR VIEW—FRONT, RH

S/N: CH91-UP

AN ATTACHMENT

SMCS-7319 **i05522230**

NOTE	REF NO	GRAPHIC REF	PART NUMBER	QTY	PART NAME 1 2 3 4 5 6 (PRODUCT LEVEL)	SEE PAGE
	1	1	**126-5211**	1	SPACER (3X15X17-MM THK)	
	2	1	**170-7721**	2	MIRROR AS	
	3	1	**201-3976**	1	ARM-MIRROR	
	4	1	**201-3977**	1	ADAPTER	
	5	1	**201-3999**	1	EXTENSION AS	
	6	1	**212-6831**	1	CLAMP AS	
	7	1	**212-6833**	1	TUBE	
	8	1	**286-4162**	1	PLUG	
	9	1	**333-0124**	1	MIRROR	
M	10	1	**131-3540**	1	LOCKNUT (M8X1.25-THD)	
M	11	1	**131-3539**	4	SCREW-FLAT HEAD (M8X1.25X30-MM)	
M	12	1	**5C-7261**	4	NUT (M8X1.25-THD)	
M	13	1	**8T-0389**	2	LOCKNUT (M10X1.5-THD)	
	14	1	**7X-0623**	6	WASHER (10.5X21X2-MM THK)	
M	15	1	**8T-4195**	2	BOLT (M10X1.5X30-MM)	
	16	1	**8T-4224**	6	WASHER-HARD (8.8X16X2-MM THK)	
	17	1	**9R-5615**	2	PLUG	

M - METRIC PART

333-0120 **MIRROR GP-REAR VIEW** (contd.) **i05522230**

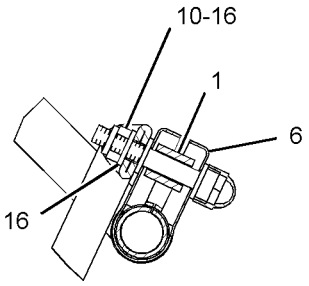

SECTION A-A

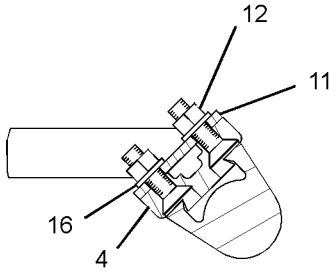

SECTION B-B

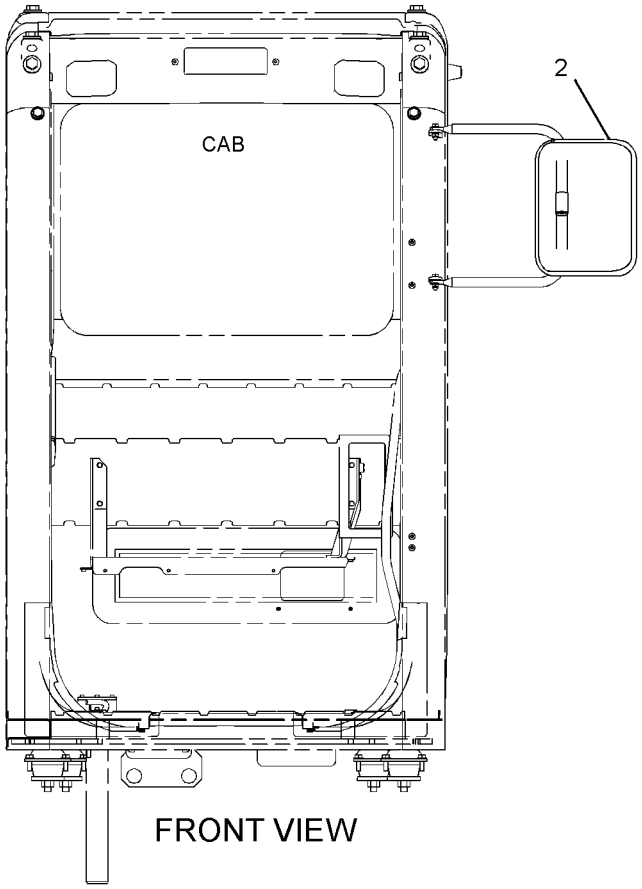

FRONT VIEW

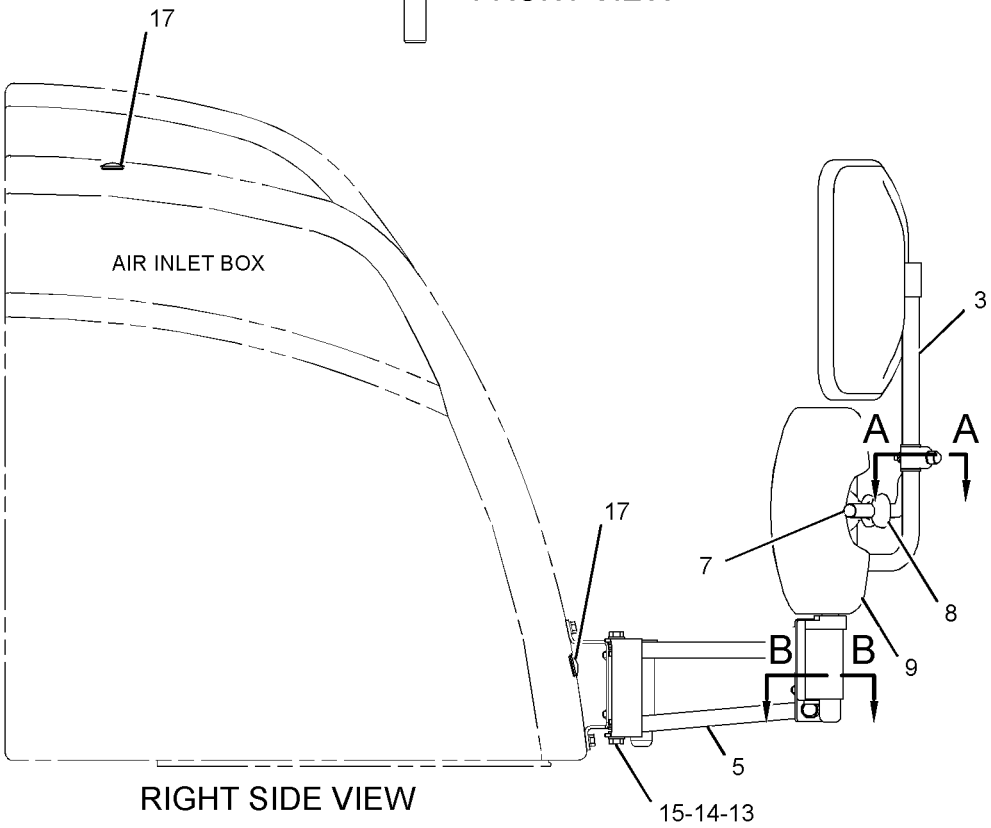

RIGHT SIDE VIEW

GRAPHIC #1 <END> g01675153

333-0122 MIRROR GP-REAR VIEW—RIGHT FRONT

S/N: CH91-UP

PART OF 453-8185, 473-2841, 517-3262 DISTRIBUTION AR

AN ATTACHMENT

SMCS-7319 **i05510668**

NOTE	REF NO	GRAPHIC REF	PART NUMBER	QTY	PART NAME 1 2 3 4 5 6 (PRODUCT LEVEL)	SEE PAGE
	1	1	**170-7721**	2	MIRROR AS	
	2	1	**201-3976**	1	ARM-MIRROR	
	3	1	**201-3977**	1	ADAPTER	
	4	1	**260-8398**	1	BRACKET	
	5	1	**333-0113**	1	TUBE	
	6	1	**333-0118**	1	TUBE	
	7	1	**333-0119**	4	CLAMP	
	8	1	**333-0124**	2	MIRROR	
M	9	1	**131-3539**	4	SCREW-FLAT HEAD (M8X1.25X30-MM)	
M	10	1	**209-8296**	2	BOLT-SOCKET HEAD (M8X1.25X25-MM)	
M	11	1	**5C-7261**	10	NUT (M8X1.25-THD)	
	12	1	**5P-4116**	8	WASHER-HARD (8.8X20.5X2-MM THK)	
M	13	1	**8T-4189**	4	BOLT (M8X1.25X20-MM)	
	14	1	**8T-4224**	4	WASHER-HARD (8.8X16X2-MM THK)	
	15	1	**9R-5615**	2	PLUG	

M - METRIC PART

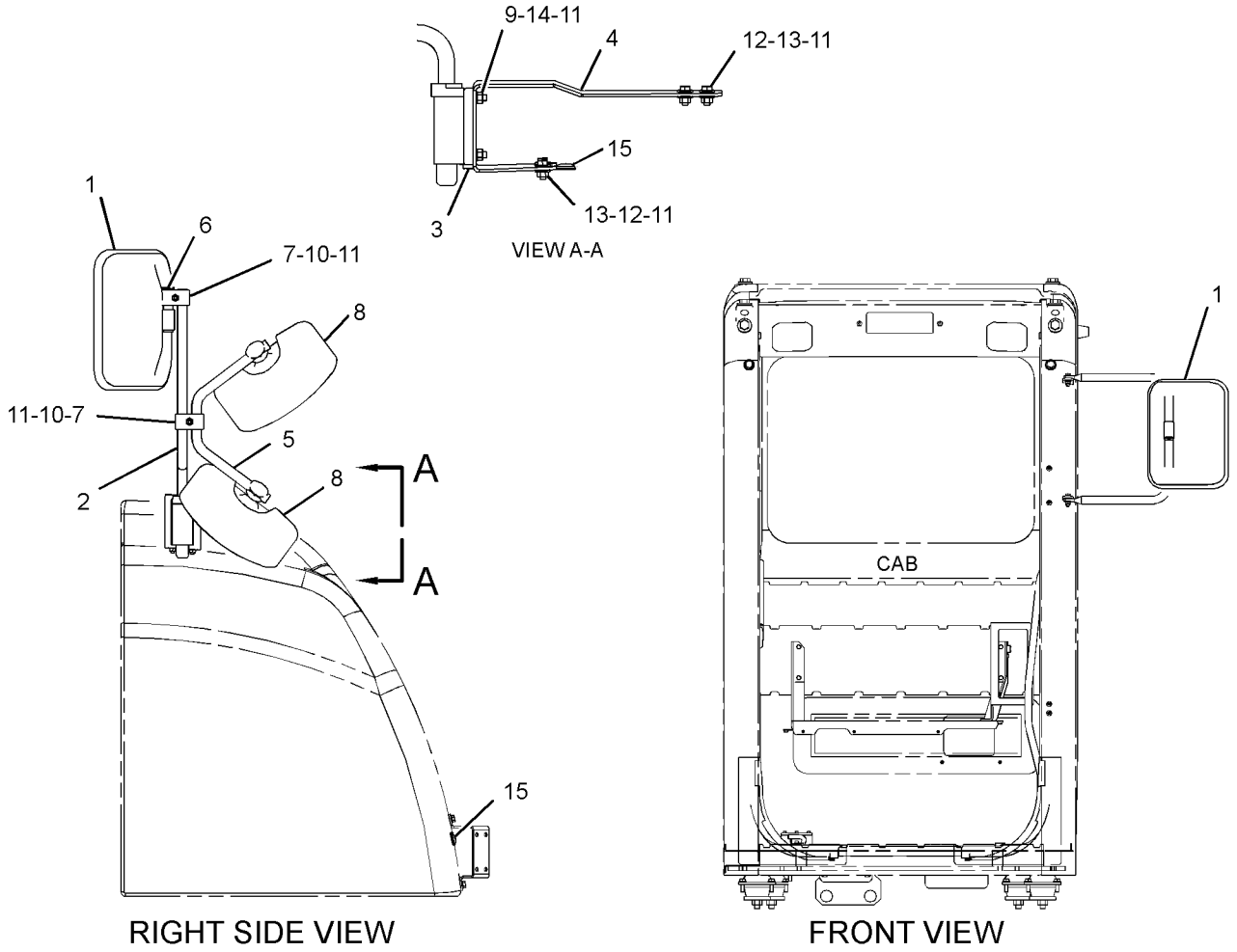

GRAPHIC #1 <END> g01676555

426-2275 MOUNTING GP-CAB

S/N: CH91-UP
PART OF 396-6835 OPERATOR AR
ALSO AN ATTACHMENT

SMCS-7266, 7301 **i05510192**

NOTE	REF NO	GRAPHIC REF	PART NUMBER	QTY	PART NAME 1 2 3 4 5 6 (PRODUCT LEVEL)	SEE PAGE
	1	1	**8Y-6967**	2	LOUVER AS-VENT	
	2	1	**242-2962**	1	COVER GP-CAB	
		1	**6C-9237**	4	RIVET	
	3	1	**319-3527**	10	WASHER-HARD (14X25X6-MM THK)	
	4	1	**396-2352**	2	LOUVER AS	
M	5	1	**3E-8020**	5	SCREW-TRUSS HEAD (M6X1X25-MM)	
M	6	1	**8T-4192**	2	BOLT (M12X1.75X25-MM)	
M	7	1	**8T-4648**	6	BOLT (M12X1.75X70-MM)	
M	8	1	**8T-6868**	2	BOLT (M12X1.75X80-MM)	

M - METRIC PART

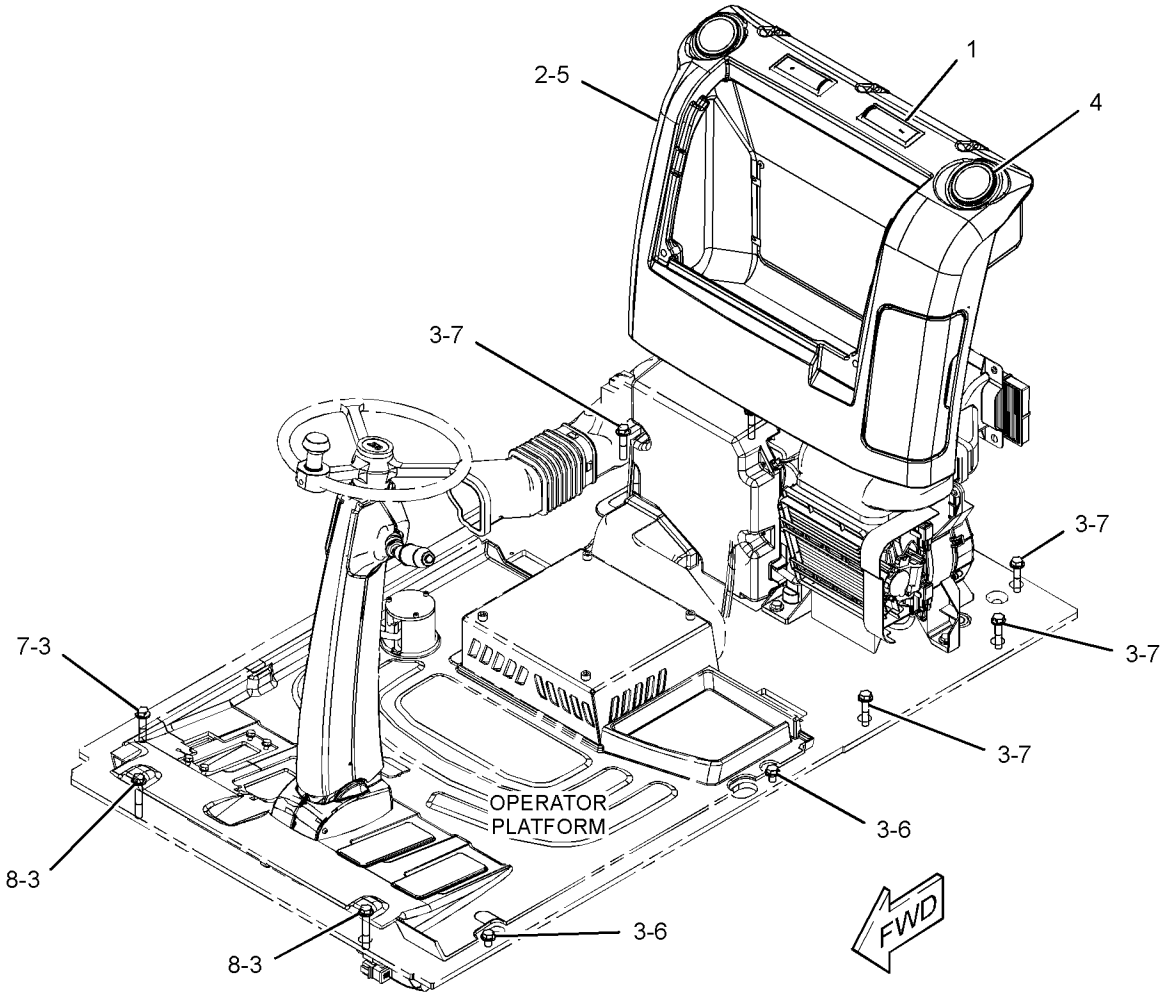

GRAPHIC #1 <END> g03506451

450-2079 MOUNTING GP-PLATFORM

S/N: CH91-UP
PART OF 449-2824 CHASSIS AR
ALSO AN ATTACHMENT

SMCS-7253 **i05525880**

NOTE	REF NO	GRAPHIC REF	PART NUMBER	QTY	PART NAME 1 2 3 4 5 6 (PRODUCT LEVEL)	SEE PAGE
	1	1	**187-3764**	4	MOUNT AS	
	2	1	**123-8642**	4	WASHER (17X75X6-MM THK)	
M	3	1	**7X-2475**	2	BOLT (M16X2X130-MM)	
M	4	1	**7X-2556**	2	BOLT (M16X2X100-MM)	
	5	1	**8T-4121**	16	WASHER-HARD (11X21X2.5-MM THK)	
M	6	1	**8T-4132**	2	NUT (M16X2-THD)	
M	7	1	**8T-4195**	16	BOLT (M10X1.5X30-MM)	
	8	1	**9X-8257**	2	WASHER (17.5X30X3.5-MM THK)	

M - METRIC PART

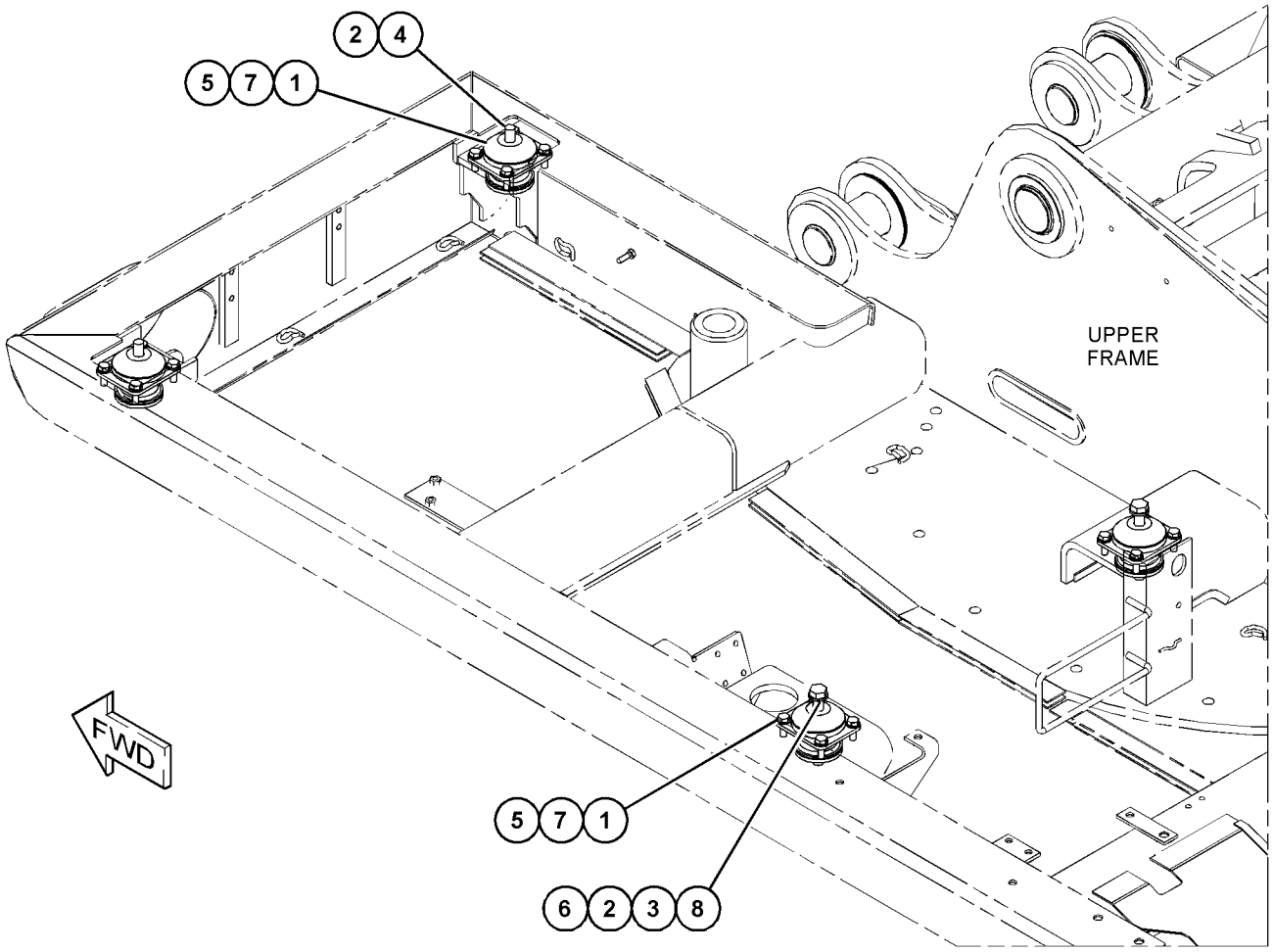

GRAPHIC #1 <END> g03500820

396-6835 OPERATOR AR

S/N: CH91-UP
PART OF 396-6834 CAB AR
ALSO AN ATTACHMENT

SMCS-7301 **i06822888**

NOTE	PART NUMBER	QTY	PART NAME 1 2 3 4 5 6 (PRODUCT LEVEL)	SEE PAGE
Y	*284-4656*	1	AIR CONDITIONER & MOUNTING GP	798
Y	*350-8546*	1	CONSOLE GP-OPERATOR	816
Y	*322-0099*	1	CONTROL GP-BRAKE	338
Y	*250-9614*	1	CONTROL GP-JOYSTICK	830
Y	**250-9619**	1	COVER GP-ACCESS (STORAGE)	840
Y	*229-9082*	2	DUCT GP-CAB AIR	844
Y	*426-2275*	1	MOUNTING GP-CAB	864
Y	*426-2274*	1	PLATFORM GP-OPERATOR	874
Y	*250-9606*	1	STEERING GP-HYDRAULIC	606
Y	*250-9607*	1	SUPPORT GP-SEAT	882

Y - SEPARATE ILLUSTRATION

<END>

388-9105 PARTS GP-DOOR

S/N: CH91-UP
PART OF 427-8448 DOOR GP-CAB
ALSO AN ATTACHMENT

SMCS-7308 **i06141224**

NOTE	REF NO	GRAPHIC REF	PART NUMBER	QTY	PART NAME 1 2 3 4 5 6 (PRODUCT LEVEL)	SEE PAGE
	1	1	**151-6703**	1	HANDLE-PULL	
	2	1	**151-6704**	2	CAP	
Y	3	1	**384-6533**	1	WINDOW GP-DOOR	903
	4	1	**383-6933**	1	GLASS	
	5	1	**156-6598**	1	HOOK	
	6	1	**156-6600**	1	LOCK AS	
	6A	1	**164-0514**	1	CLIP	
		1	**164-0519**	1	CLIP (13-MM)	
	7	1	**156-6643**	2	COVER	
	8	1	**156-6645**	1	HANDLE AS	
		1	**201-4391**	1	CLIP	
	9	1	**161-3639**	1	HANDLE AS	
	10	1	**161-3650**	1	COVER AS	
	11	1	**161-3663**	1	SEAL AS	
		1	**151-9497**	45	CLIP	
	12	1	**449-9326**	1	SEAL	
	13	1	**164-0515**	1	JOINT	
	14	1	**167-7039**	1	GROMMET	
M	15	1	**185-8180**	3	SCREW (M6X1X16-MM)	
	16	1	**8T-4224**	2	WASHER-HARD (8.8X16X2-MM THK)	
	17	1	**259-7354**	1	COVER	
M	18	1	**096-2622**	2	SCREW-MACHINE (M4X0.7X8-MM)	
M	19	1	**096-3884**	2	NUT-SPRING (M8X1.25-THD)	
M	20	1	**101-8899**	2	SCREW AS (M6X1.0X16-MM)	
M	21	1	**101-8900**	2	SCREW AS (M6X1X20-MM)	
	22	1	**151-9461**	4	SPACER	
	23	1	**178-5573**	4	SPACER	
	24	1	**178-5574**	3	SPACER	
	25	1	**448-9502**	1	HANDLE	
	26	1	**4I-4286**	1	KNOB (HANDLE)	
M	27	1	**9X-2042**	8	SCREW-TRUSS HEAD (M6X1X12-MM)	

M - METRIC PART
Y - SEPARATE ILLUSTRATION

388-9105 **PARTS GP-DOOR** (contd.) **i06141224**

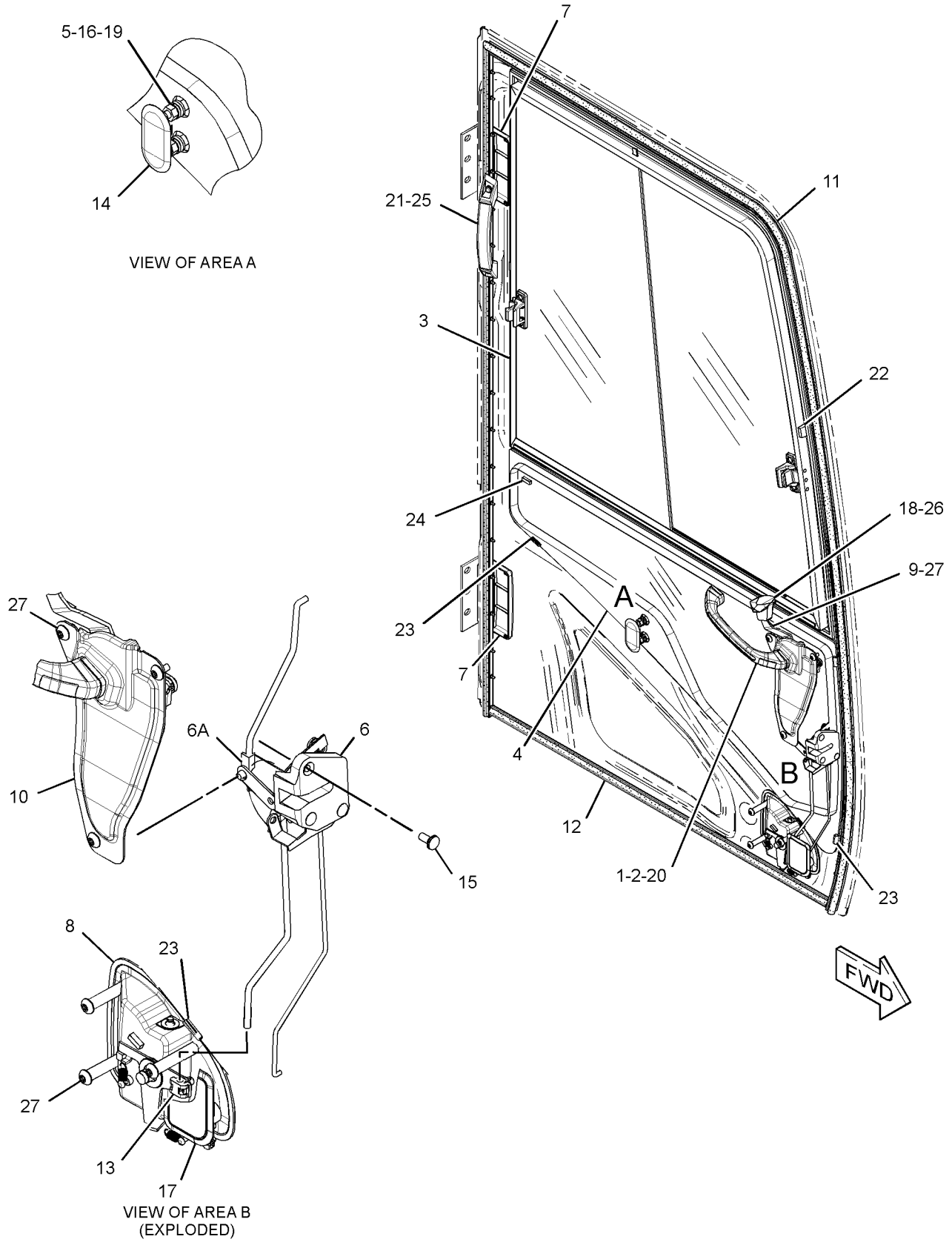

GRAPHIC #1 <END> g02178270

297-6534 PEDAL GP—ELECTRONIC

S/N: CH91-UP

PART OF 252-6685 CONTROL & MTG GP-PEDAL

AN ATTACHMENT

SMCS-5059 **i05527689**

NOTE	REF NO	GRAPHIC REF	PART NUMBER	QTY	PART NAME 1 2 3 4 5 6 (PRODUCT LEVEL)	SEE PAGE
	1	1	**126-8059**	1	CAP-PLASTIC	
	2	1	**117-8700**	1	PEDAL	
	3	1	**201-0502**	1	KIT-PEDAL	
					(INCLUDES PARTS MARKED N IN GRAPHIC)	
	4	1	**299-5879**	2	CAP-PROTECTIVE	
	5	1	**299-5880**	1	PLATE	
	6	1	**299-5881**	1	KIT-PLUNGER	
					(INCLUDES PARTS MARKED J IN GRAPHIC)	
M	7	1	**107-2723**	1	BOLT-SOCKET HEAD (M12X1.75X20-MM)	
	8	1	**151-9272**	1	KIT-RECEPTACLE (2-PIN)	
					(INCLUDES RECEPTACLE AS & WEDGE)	
	9	1	**155-2270**	1	KIT-CONNECTING PLUG (2-PIN)	
					(INCLUDES PLUG AS & WEDGE)	
	10	1	**151-9274**	1	KIT-RECEPTACLE (4-PIN)	
					(INCLUDES RECEPTACLE AS & WEDGE)	
	11	1	**9X-3401**	4	PIN-CONNECTOR (16-GA TO 18-GA)	
	12	1	**9X-3402**	2	SOCKET-CONNECTOR (16-GA TO 18-GA)	
	13	1	**8T-8737**	2	PLUG-SEAL	

M - METRIC PART

297-6534 **PEDAL GP** (contd.) **i05527689**

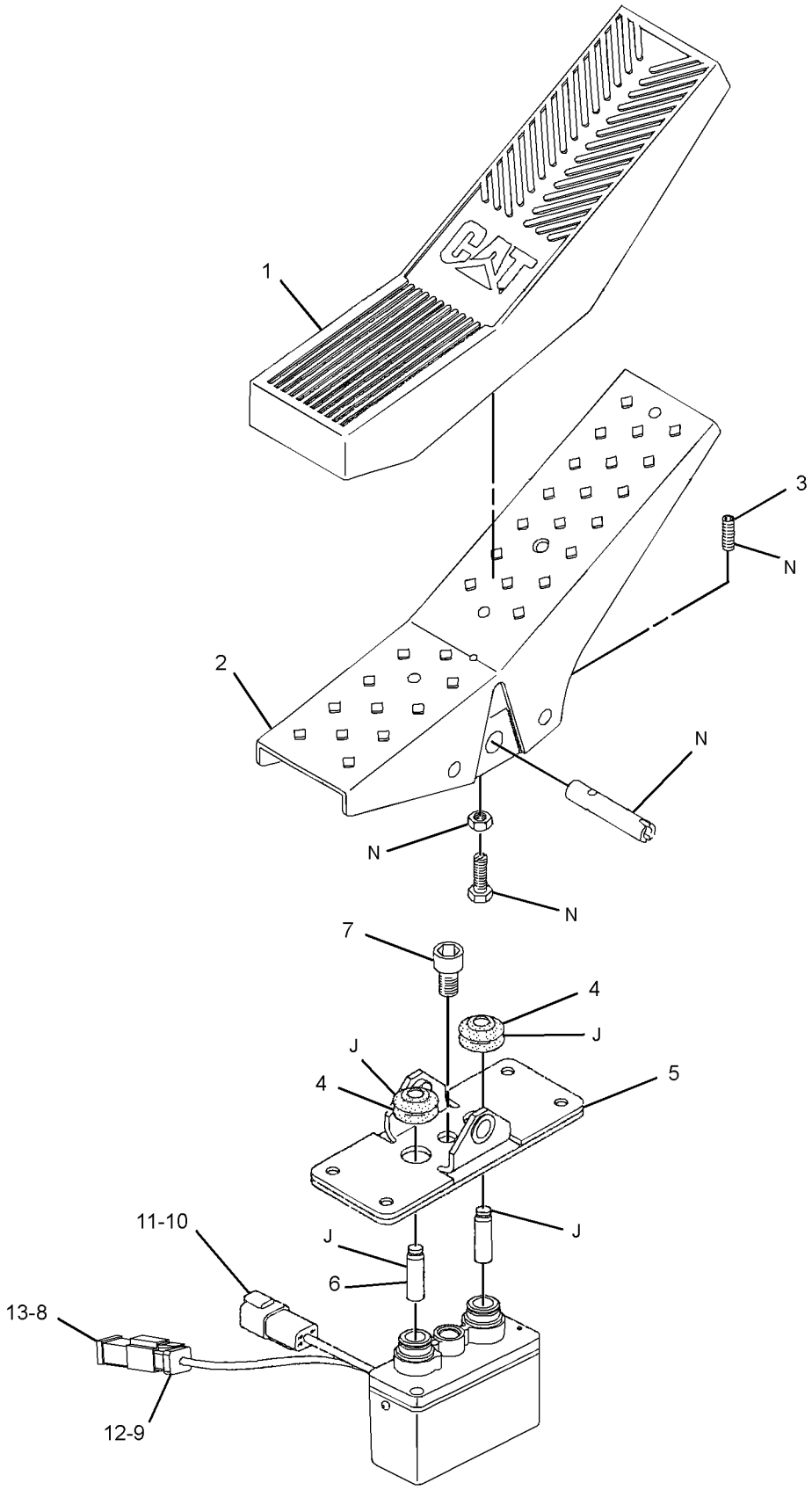

GRAPHIC #1 <END> g01640013

160-1501 PEDAL GP-BRAKE

S/N: CH91-UP
PART OF 322-0099 CONTROL GP-BRAKE
ALSO AN ATTACHMENT

SMCS-4269 **i05534368**

NOTE	REF NO	GRAPHIC REF	PART NUMBER	QTY	PART NAME 1 2 3 4 5 6 (PRODUCT LEVEL)	SEE PAGE
	1	1	**180-6519**	1	BRACKET	
	2	1	**227-8179**	1	PEDAL	
	3	1	**8U-3213**	1	BRACKET	
	4	1	**180-6520**	1	PLATE	
	5	1	**8U-3214**	1	PIN GP-PEDAL	
		1	**5C-5306**	2	RING-RETAINING	
	6	1	**8U-5805**	1	PIN GP-PEDAL	
		1	**096-2323**	2	RING-RETAINING (EXTERNAL)	
	7	1	**8U-5806**	1	DOWEL	
	8	1	**180-6523**	1	PIN-DOWEL	
	9	1	**180-6524**	1	LEVER	
	10	1	**8U-5807**	1	SPRING	
M	11	1	**6V-2317**	2	BOLT (M8X1.25X30-MM)	
M	12	1	**6V-5217**	1	BOLT (M8X1.25X20-MM)	
	13	1	**5W-1259**	2	NUT (M8X1.25-THD)	
M	14	1	**5W-1318**	1	NUT (M8X1.25-THD)	
	15	1	**8U-3216**	1	LOCKWASHER	
	16	1	**116-9945**	1	RETAINER-SPRING	
	17	1	**095-0916**	1	RING-RETAINING	
	18	1	**5W-9431**	1	RING-RETAINING	
	19	1	**8U-5809**	1	RING-WIPER	
	20	1	**180-6526**	1	SPRING	
	21	1	**116-9946**	1	PLATE	

M - METRIC PART

160-1501 **PEDAL GP-BRAKE** (contd.) **i05534368**

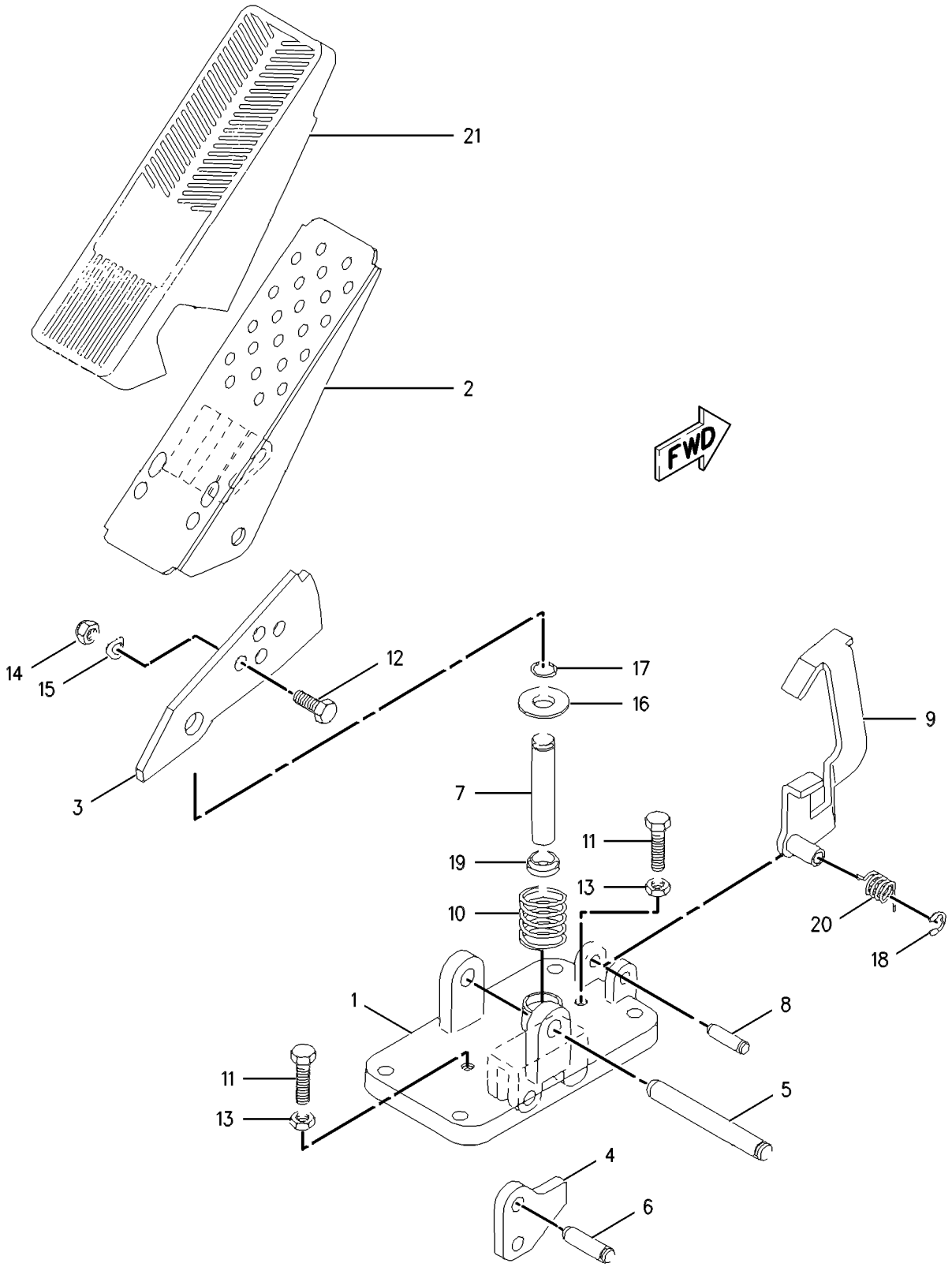

GRAPHIC #1 <END> g00641241

262-2781 PLATE-RADIO

S/N: CH91-UP

AN ATTACHMENT

SMCS-7338 **i06881940**

NOTE	REF NO	GRAPHIC REF	PART NUMBER	QTY	PART NAME 1 2 3 4 5 6 (PRODUCT LEVEL)	SEE PAGE
	1	1	**423-8892**	1	PLATE-RADIO	

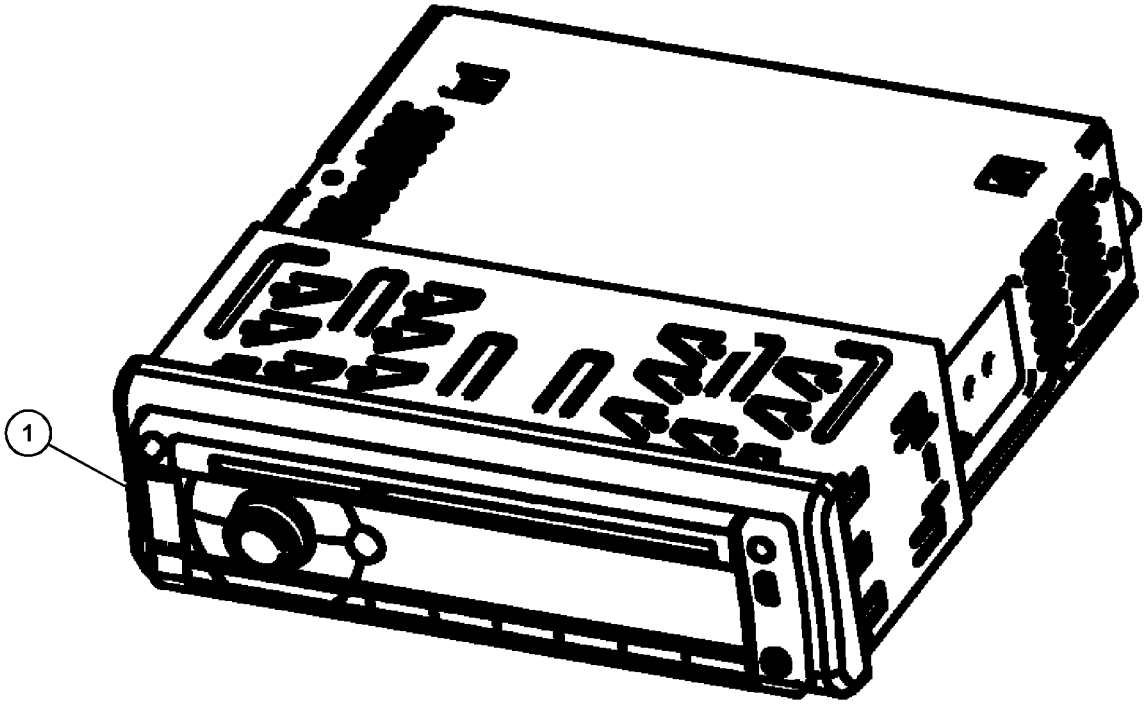

GRAPHIC #1 <END> g06151668

426-2274 PLATFORM GP-OPERATOR

S/N: CH91-UP
PART OF 396-6835 OPERATOR AR
ALSO AN ATTACHMENT

SMCS-7253 **i05510193**

NOTE	REF NO	GRAPHIC REF	PART NUMBER	QTY	PART NAME 1 2 3 4 5 6 (PRODUCT LEVEL)	SEE PAGE
	1	1	**8U-4683**	1	COVER	
	2	1	**135-8966**	1	GROMMET	
	3	1	**227-6008**	1	PIN AS	
	4	1	**240-6946**	1	FLOOR MAT (PLATFORM)	
	5	1	**426-2273**	1	PLATFORM AS	
M	6	1	**099-2374**	3	BOLT-SOCKET HEAD (M5X0.8X12-MM)	
	7	1	**8T-4224**	4	WASHER-HARD (8.8X16X2-MM THK)	
M	8	1	**8T-4908**	4	BOLT (M8X1.25X25-MM)	

M - METRIC PART

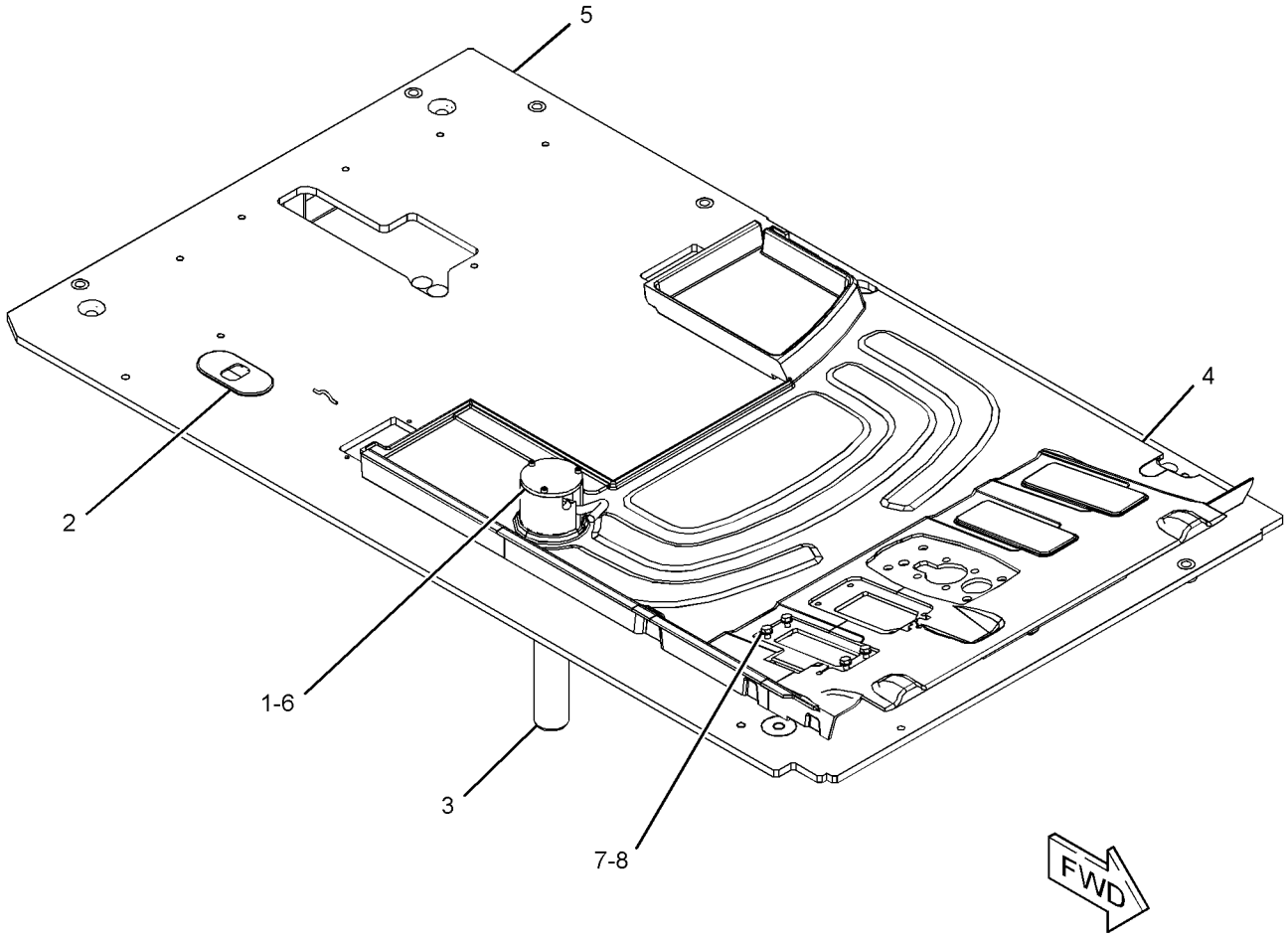

GRAPHIC #1 <END> g03506429

427-8462 SCREEN GP-SUN

S/N: CH91-UP
PART OF 426-2270 CAB GP
ALSO AN ATTACHMENT

SMCS-7165 **i06575761**

NOTE	REF NO	GRAPHIC REF	PART NUMBER	QTY	PART NAME 1 2 3 4 5 6 (PRODUCT LEVEL)	SEE PAGE
	1	1	**156-6656**	1	RAIL	
	2	1	**156-6657**	1	RAIL	
	3	1	**176-1946**	1	PLATE	
	4	1	**176-1947**	1	PLATE	
	5	1	**383-5706**	1	VISOR	
	6	1	*432-5826*	1	SCREEN GP-SUN	
M		1	**153-3568**	6	BOLT-SOCKET HEAD (M5X0.8X10-MM)	
		1	**255-4410**	1	SCREEN-SUN (CAB)	
		1	**259-7214**	3	HOOK-RETAINER	
		1	**259-7215**	3	HOOK-RETAINER	
M	7	1	**9X-2044**	6	SCREW-TRUSS HEAD (M6X1X16-MM)	
D	8	1	**5P-5927**		SEAL (0.02-M EACH)	

D - ORDER BY THE METER
M - METRIC PART

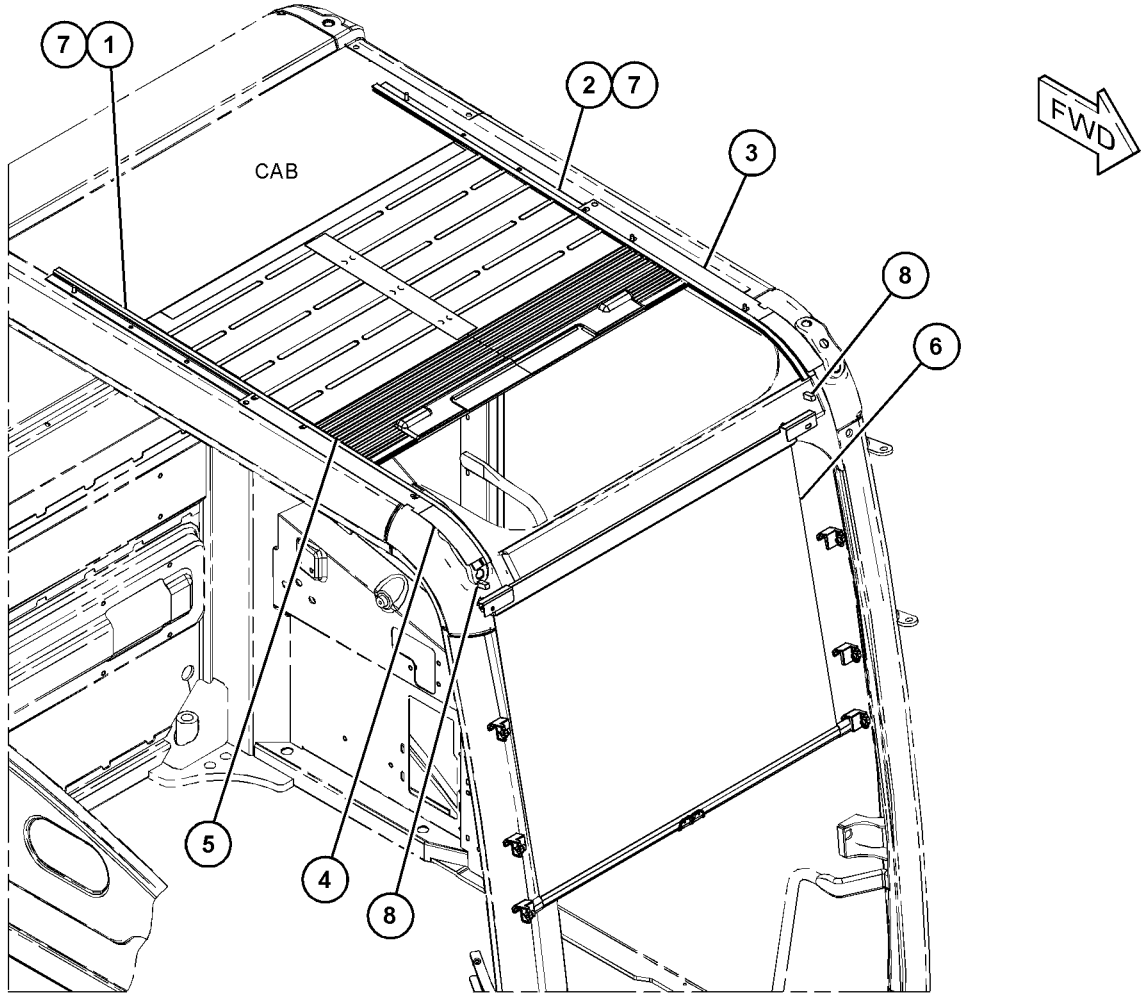

GRAPHIC #1 <END> g06133078

205-6210 SEAT BELT GP–RETRACTABLE, 2-IN

S/N: CH91-UP

PART OF 356-1638, 452-6951 SEAT GP-SUSPENSION

AN ATTACHMENT

SMCS-7327 **i05496632**

NOTE	REF NO	GRAPHIC REF	PART NUMBER	QTY	PART NAME 1 2 3 4 5 6 (PRODUCT LEVEL)	SEE PAGE
					(NO SERVICED PARTS)	

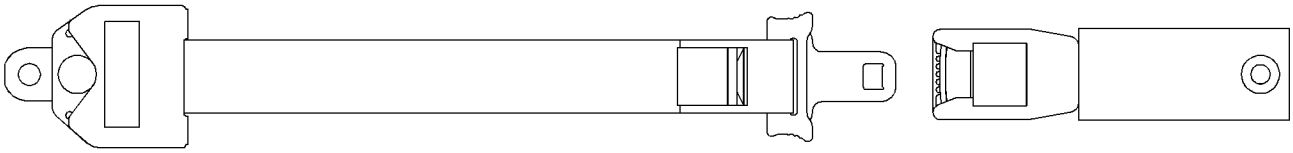

GRAPHIC #1 <END> g01235264

356-1638 SEAT GP-SUSPENSION–COMFORT

S/N: CH91-UP

PART OF 396-4430 CONTROL PEDAL & SEAT AR

AN ATTACHMENT

SMCS-7324, 7336 **i07449150**

NOTE	REF NO	GRAPHIC REF	PART NUMBER	QTY	PART NAME 1 2 3 4 5 6 (PRODUCT LEVEL)	SEE PAGE
Y	1	1	**366-1890**	1	SUSPENSION GP-SEAT (COMFORT)	883
	2	1	**366-1879**	1	KIT-BACK CUSHION (SUSPENSION SEAT)	
					(INCLUDES BACKREST CUSHION, SCREW & COVER)	
	3	1	**366-1880**	1	KIT-SEAT CUSHION	
					(INCLUDES CUSHION SEAT & SCREWS)	
	4	1	**250-9603**	1	HEADREST AS-SEAT	
	5	1	**208-0232**	1	HANDLE	
	6	1	**208-0231**	1	COVER (RH)	
	7	1	**208-0233**	1	COVER (LH)	
Y	8	1	**205-6210**	1	SEAT BELT GP (RETRACTABLE, 48-MM)	876
	9	1	**208-0236**	1	HANDLE	
	10	1	**208-0235**	1	KIT-ADJUSTER (SUSPENSION SEAT)	
					(INCLUDES PARTS MARKED L IN GRAPHIC)	
	11	1	**304-5408**	1	KIT-ADJUSTER (SUSPENSION SEAT)	
					(INCLUDES SPRINGS, STRAP, SCREWS & PARTS MARKED N IN GRAPHIC)	
	12	1	**208-0234**	1	KIT-LEVER (SUSPENSION SEAT)	
					(INCLUDES LEVER, SCREWS, BUSHING, STRAP & PARTS MARKED P IN GRAPHIC)	
	13	1	**208-0238**	1	KIT-SEAT COVER (SUSPENSION SEAT)	
					(INCLUDES RIVETS, WASHERS, STRAPS, SCREWS & PARTS MARKED H IN GRAPHIC)	
	14	1	**304-5409**	1	KIT-ADJUSTER (SUSPENSION SEAT)	
					(INCLUDES SCREWS & PARTS MARKED S IN GRAPHIC)	
	15	1	**283-8341**	1	KIT-BEARING (SUSPENSION SEAT)	
					(INCLUDES PLATE AS, BUSHINGS, WASHER & CAP)	
	16	1	**208-0212**	1	KIT-ADJUSTER (SUSPENSION SEAT)	
					(INCLUDES LEVER, ADJUSTERS, INSERT NUTS, LOCKNUTS & WASHERS)	
	17	1	**304-5414**	1	KIT-HARNESS (SUSPENSION SEAT)	
					(INCLUDES HARNESS AS, SCREWS, STRAPS, BOLTS, WASHERS, BOLTS & NUTS)	
	18	1	**208-1133**	1	KIT-SUPPORT (SUSPENSION SEAT)	
					(INCLUDES PLATES, RIVETS, CARRIER, ROD & PARTS MARKED T IN GRAPHIC)	
	19	1	**208-1134**	1	KIT-HANDLE (SUSPENSION SEAT)	
					(INCLUDES HANDLE & PARTS MARKED U IN GRAPHIC)	
	20	1	**300-4417**	1	KIT-BRACKET (SUSPENSION SEAT)	
					(INCLUDES PARTS MARKED V IN GRAPHIC)	
					PARTS SHOWN IN GRAPHIC(S) WITHOUT A REFERENCE NUMBER ARE NOT SERVICED SEPARATELY	
					AVAILABLE REPAIR KIT(S):	
			366-1881	1	KIT-FASTENER (SUSPENSION SEAT)	
					(INCLUDES PARTS MARKED J IN GRAPHIC)	
			208-1163	1	KIT-FASTENER (SEAT BELT)	
					(INCLUDES CAPS, BUSHINGS, BOLTS & PARTS MARKED W IN THE GRAPHICS)	

Y - SEPARATE ILLUSTRATION

356-1638 **SEAT GP-SUSPENSION** (contd.) **i07449150**

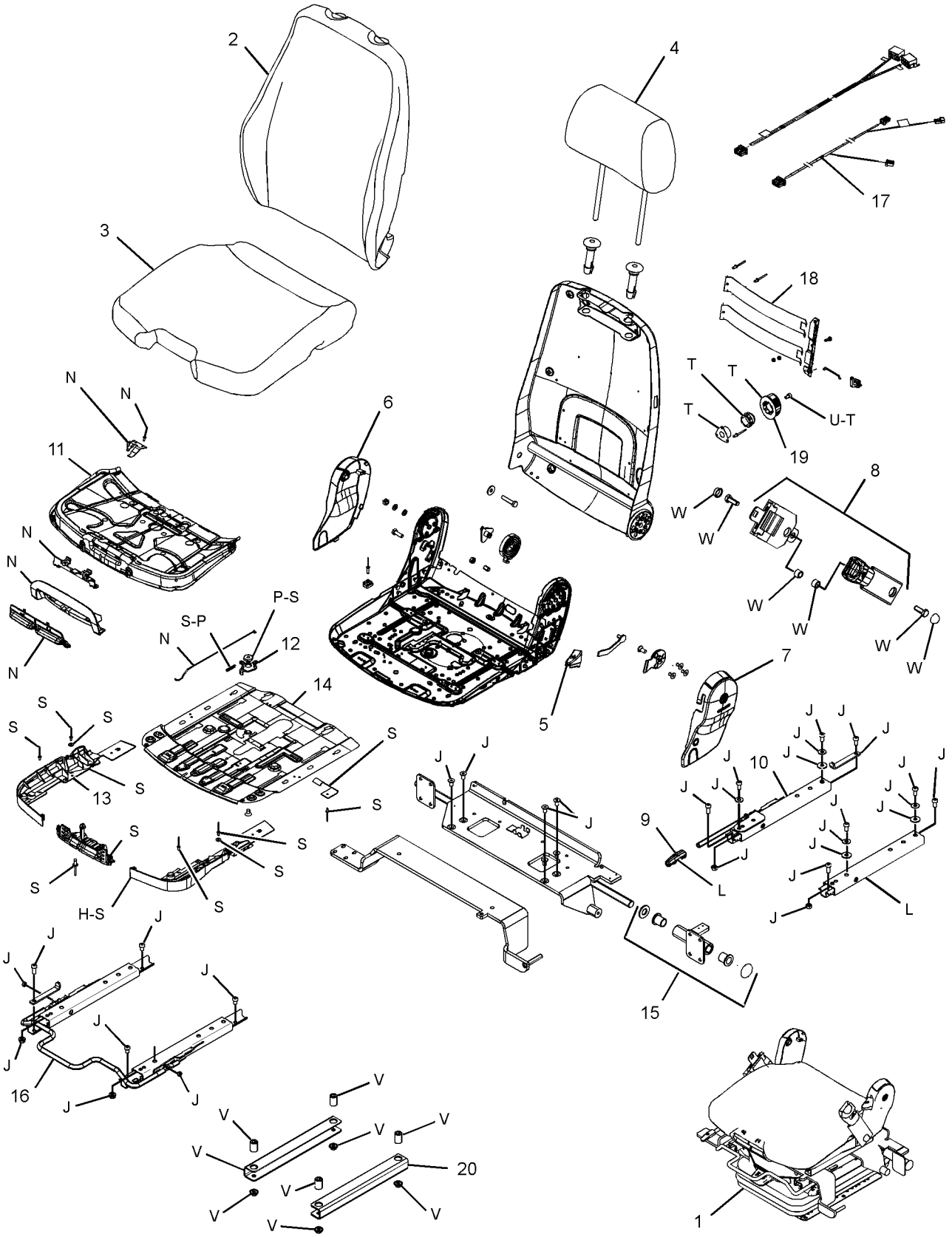

GRAPHIC #1 <END> g03603416

452-6951 SEAT GP-SUSPENSION—FABRIC

S/N: CH91-UP
PART OF 453-8180 CAB AR
AN ATTACHMENT

SMCS-7324, 7336 **i05927678**

NOTE	REF NO	GRAPHIC REF	PART NUMBER	QTY	PART NAME 1 2 3 4 5 6 (PRODUCT LEVEL)	SEE PAGE
Y	1	1	**454-6848**	1	SUSPENSION GP-SEAT	886
N	2	1	**454-6859**	1	KIT-ADJUSTER	
					(INCLUDES HANDLE, NUTS, SLIDE ASSEMBLIES & STOPPER)	
	3	1	**454-6862**	1	KIT-BRACKET	
	4	1	**454-6863**	1	KIT-BRACKET	
					(EACH BRACKET KIT INCLUDES BOLTS, BRACKET, NUTS & TUBES)	
	5	1	**454-6849**	1	CUSHION AS-BACKREST	
	6	1	**454-6850**	1	CUSHION AS-SEAT	
	7	1	**454-6851**	1	HEADREST AS-SEAT	
	8	1	**208-0232**	1	HANDLE	
	9	1	**454-6853**	1	COVER (RH)	
	10	1	**454-6854**	1	COVER (LH)	
Y	11	1	**205-6210**	1	SEAT BELT GP (RETRACTABLE, 48-MM)	876
P	12	1	**208-0236**	1	HANDLE	
	13	1	**454-6858**	1	KIT-BEARING	
					(INCLUDES BUSHINGS, CAP, PLATES AS & WASHER)	
J	14	1	**454-6861**	1	KIT-HANDLE	
					(INCLUDES BOLT & KNOB)	
					AVAILABLE REPAIR KIT(S):	
J			**454-6860**	1	KIT-SUPPORT	
					(INCLUDES PARTS MARKED "H" IN GRAPHIC)	
			454-6847	1	KIT-FASTENER	
					(INCLUDES BOLTS, BUSHINGS & CAPS)	
P			**454-6856**	1	KIT-ADJUSTER	
					(INCLUDES SLIDE ASSEMBLIES, BRACKET, HANDLE, LOCKNUT & STOPPERS)	
N			**225-1221**	18	KIT-MOUNTING (SEAT ADJUSTMENT)	
					(INCLUDES PARTS MARKED "S" IN THE GRAPHIC)	

J - KIT MARKED J SERVICES PART(S) MARKED J
N - KIT MARKED N SERVICES PART(S) MARKED N
P - KIT MARKED P SERVICES PART(S) MARKED P
Y - SEPARATE ILLUSTRATION

452-6951 **SEAT GP-SUSPENSION** (contd.) **i05927678**

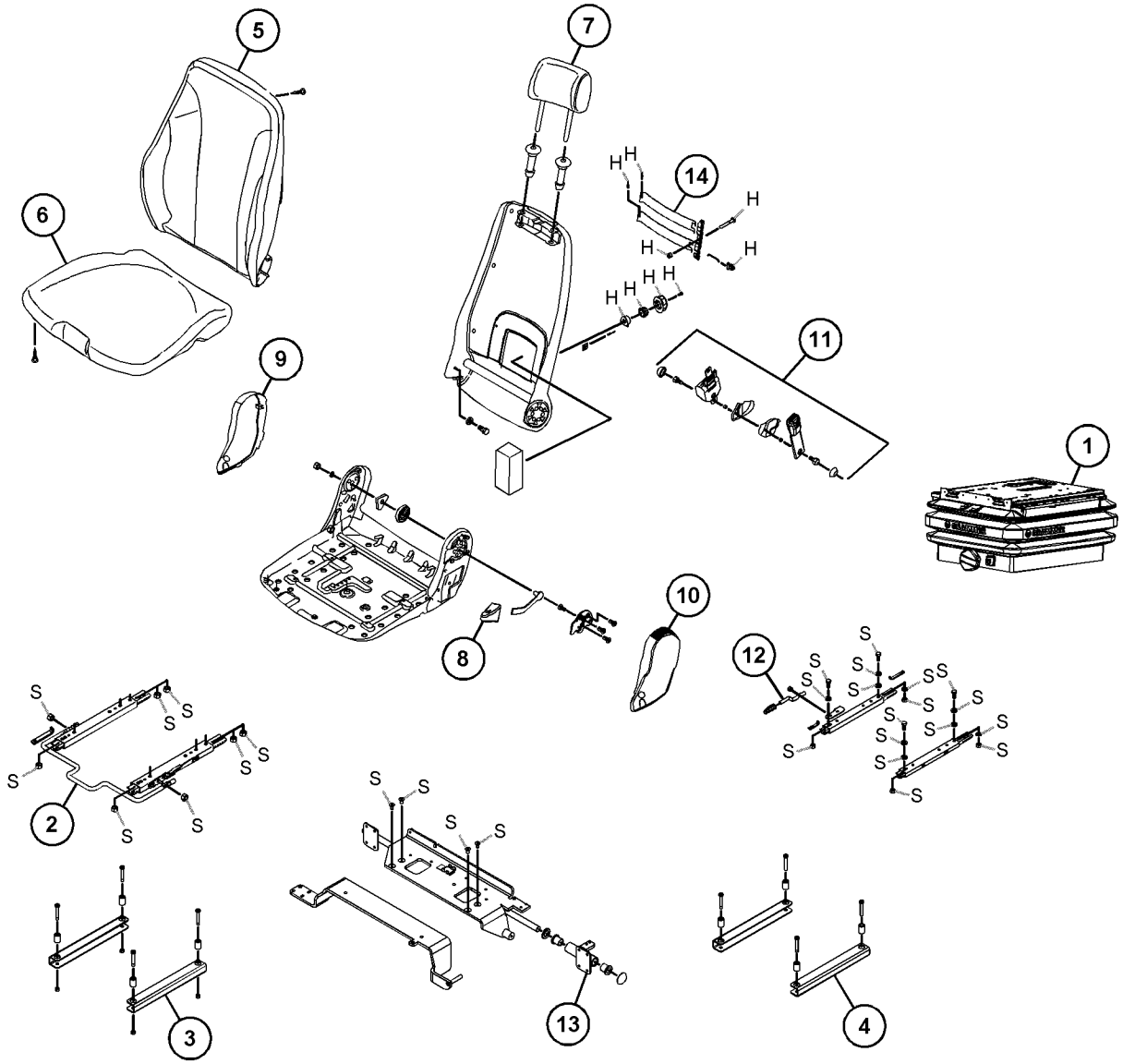

GRAPHIC #1 <END> g03744215

354-6127 STEERING COLUMN GP-ADJUSTABLE

S/N: CH91-UP
PART OF 250-9606 STEERING GP-HYDRAULIC
ALSO AN ATTACHMENT

SMCS-4310 **i06068149**

NOTE	REF NO	GRAPHIC REF	PART NUMBER	QTY	PART NAME 1 2 3 4 5 6 (PRODUCT LEVEL)	SEE PAGE
	1	1	**358-2573**	1	KIT-GAS SPRING (STEERING COLUMN)	
					(INCLUDES WIRE, SPRING AS-GAS, SPACERS, PIN CLIPS & RETAINING RINGS)	
	2	1	**473-7004**	1	SPRING-TORSION	

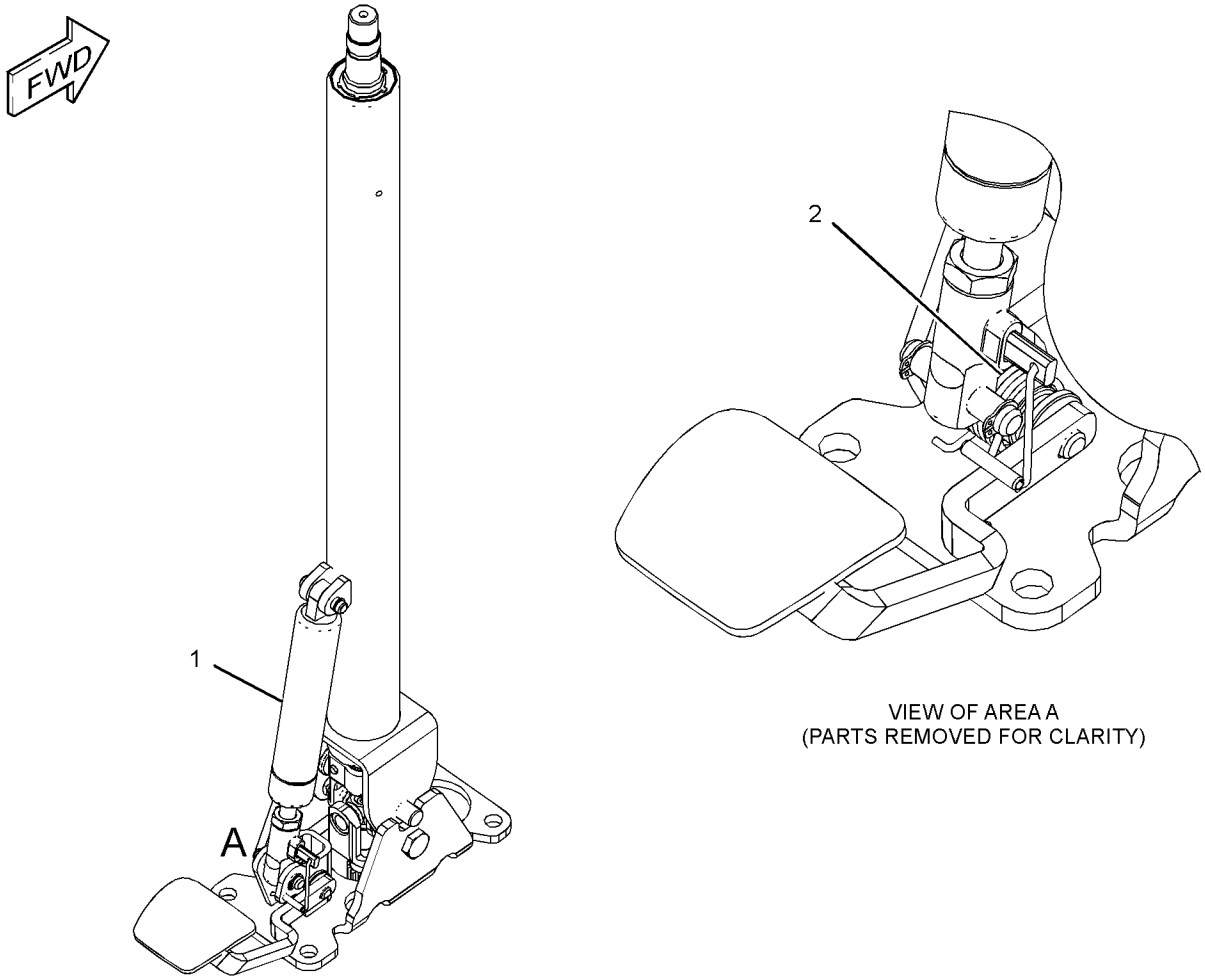

VIEW OF AREA A
(PARTS REMOVED FOR CLARITY)

GRAPHIC #1 <END> g03868363

250-9607 SUPPORT GP-SEAT

S/N: CH91-UP
PART OF 396-6835 OPERATOR AR
ALSO AN ATTACHMENT

SMCS-7321 **i05496635**

NOTE	REF NO	GRAPHIC REF	PART NUMBER	QTY	PART NAME 1 2 3 4 5 6 (PRODUCT LEVEL)	SEE PAGE
M	1	1	**105-3488**	4	BOLT-SOCKET HEAD (M10X1.5X16-MM)	
	2	1	**252-9410**	1	SUPPORT AS-SEAT	
	3	1	**8T-4121**	4	WASHER-HARD (11X21X2.5-MM THK)	
M	4	1	**8T-4191**	4	BOLT (M10X1.5X16-MM)	

M - METRIC PART

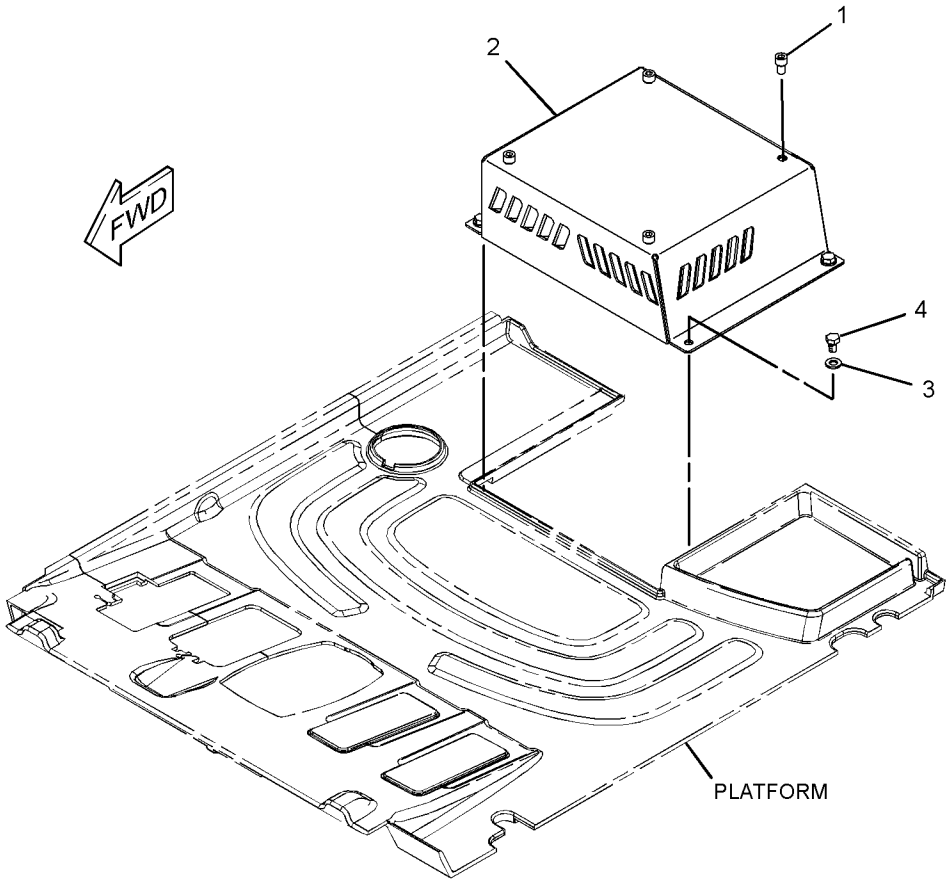

GRAPHIC #1 <END> g01318029

366-1890 SUSPENSION GP-SEAT—COMFORT

S/N: CH91-UP

PART OF 356-1638 SEAT GP-SUSPENSION

AN ATTACHMENT

SMCS-7324 **i05791905**

NOTE	REF NO	GRAPHIC REF	PART NUMBER	QTY	PART NAME 1 2 3 4 5 6 (PRODUCT LEVEL)	SEE PAGE
	1	2	**366-1882**	1	KIT-CONTROL (SUSPENSION SEAT)	
					(INCLUDES LEVEL CONTROL, RIVET, RETAINER PLUGS, BOLTS & PARTS MARKED B IN GRAPHIC)	
	2	1	**304-5418**	1	KIT-GAS SPRING (SUSPENSION SEAT)	
					(INCLUDES GAS SPRING, SCREW & RETAINER PLUGS)	
	3	1	**366-1883**	1	BELLOWS AS	
	4	2	**366-1884**	1	KIT-COMPRESSOR (SUSPENSION SEAT)	
					(INCLUDES COMPRESSOR, RETAINER PLUGS & PARTS MARKED C IN GRAPHIC)	
	5	1	**208-3494**	1	HANDLE	
	6	1	**452-9669**	1	ACTUATOR AS	
					(INCLUDES TORSION SPRING, HANDLES, SCREWS, BEARING BLOCK, BOLT, PLUGS, STRAP CABLE, RIVET BLIND, BOWDEN CABLES RIVET EXPANDING, SOCKET BOLT HEADS & CABLE FASTENER)	
	7	1	**366-1885**	1	KIT-HARNESS (SUSPENSION SEAT)	
					(INCLUDES HARNESS AS, CLIP & RETAINER PLUGS)	
	8	1	**304-5427**	1	KIT-HOSE (SUSPENSION SEAT)	
					(INCLUDES HOSES, PROTECTIVE CAP, HOSE NIPPLE, RETAINER PLUGS & PARTS MARKED D IN GRAPHIC)	
	9	1	**208-3510**	1	KIT-COVER (SUSPENSION SEAT)	
					(INCLUDES COVER, BOLTS & PARTS MARKED H IN GRAPHIC)	
	10	2	**304-5424**	1	KIT-LATCH (SUSPENSION SEAT)	
					(INCLUDES STOP LEVER, RETAINER PLUGS & PARTS MARKED K IN GRAPHIC)	
	11	2	**304-5423**	1	KIT-SUSPENSION (SUSPENSION SEAT)	
					(INCLUDES SPRING BRACKET, RETAINER PLUGS, RIVETS, BOLTS, CABLE STRAP & & PARTS MARKED M IN GRAPHIC)	
	12	2	**304-5422**	1	KIT-SHOCK ABSORBER (SUSPENSION SEAT)	
					(INCLUDES SHOCK ABSORBER, WASHER, RETAINER PLUGS & PARTS MARKED N IN GRAPHIC)	
					PARTS SHOWN IN GRAPHIC(S) WITHOUT A REFERENCE NUMBER ARE NOT SERVICED SEPARATELY	
					AVAILABLE REPAIR KIT(S):	
			304-5419	1	KIT-PARTS (SUSPENSION SEAT)	
					(INCLUDES PARTS MARKED J IN GRAPHIC)	

366-1890 **SUSPENSION GP-SEAT (**contd.**)** **i05791905**

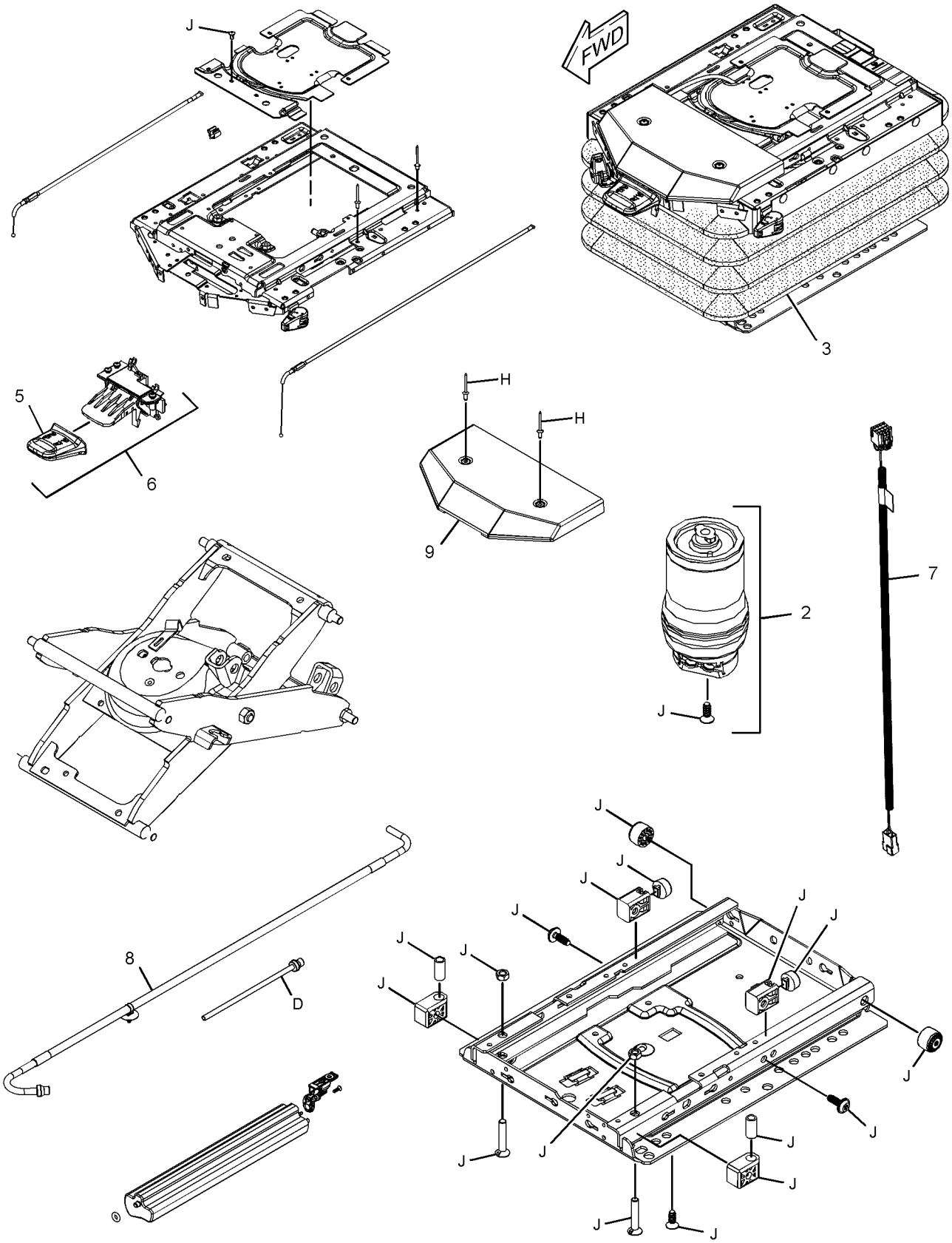

GRAPHIC #1 g02436084

366-1890 **SUSPENSION GP-SEAT (**contd.**)** **i05791905**

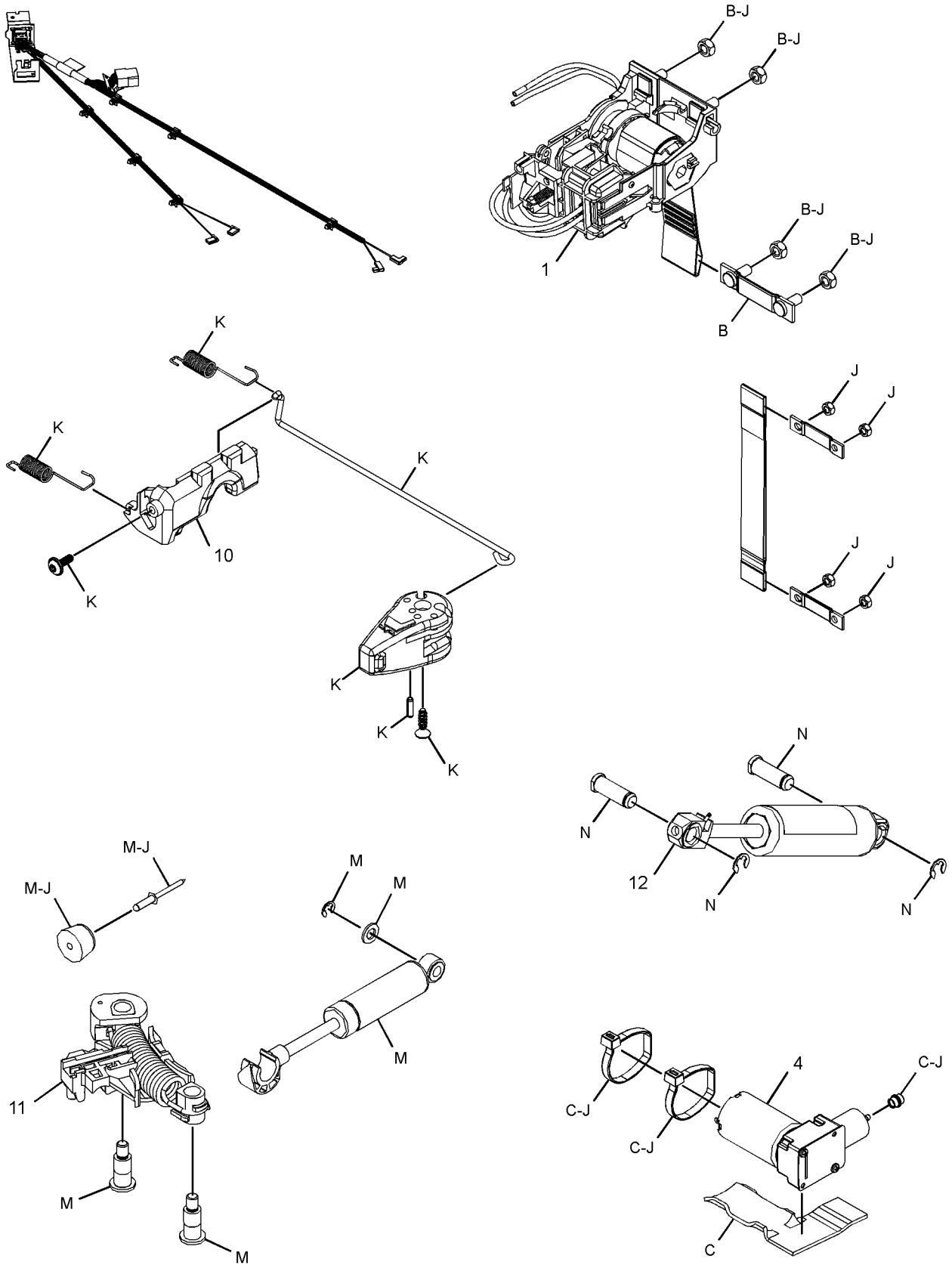

GRAPHIC #2 <END> g02436496

454-6848 SUSPENSION GP-SEAT

S/N: CH91-UP

PART OF 452-6951 SEAT GP-SUSPENSION

AN ATTACHMENT

SMCS-7324 **i05971103**

NOTE	REF NO	GRAPHIC REF	PART NUMBER	QTY	PART NAME 1 2 3 4 5 6 (PRODUCT LEVEL)	SEE PAGE
	1	1	**454-6864**	1	KIT-PLATE	
					(INCLUDES PARTS MARKED "S" IN GRAPHIC)	
	2	1	**454-6865**	1	PLATE	
	3	1	**454-6866**	1	KIT-STRAP	
					(INLCUDES PLATES, STRAP & RIVETS)	
L	4	1	**454-6867**	1	KIT-BEARING	
J	6	1	**454-6870**	1	BEARING-THRUST	
	7	1	**454-6872**	1	BEARING AS	
	8	1	**454-6873**	1	KIT-BUMPER	
					(INCLUDES BUMPERS)	
	9	1	**454-6874**	1	KIT-SHOCK ABSORBER	
					(INCLUDES PARTS MARKED "X" IN GRAPHIC)	
	10	1	**454-6875**	1	TAPE-INDICATOR	
	11	1	**454-6876**	1	BOOT	
L	13	1	**208-0218**	2	SPRING	
L	14	1	**8R-1573**	1	PLATE	
	15	1	**8R-3260**	1	WASHER	
	16	1	**208-0220**	2	SPRING	
	17	1	**208-0222**	1	BRACKET-SPRING	
	18	1	**8R-1577**	1	PLUG-RETAINER	
	19	1	**8R-1585**	1	SPRING-TENSION	
L	20	1	**208-0225**	8	BUSHING-LINKAGE	
	21	1	**8R-1613**	2	SPRING-TENSION	
					PARTS SHOWN IN GRAPHIC(S) WITHOUT A REFERENCE NUMBER ARE NOT SERVICED SEPARATELY	
					AVAILABLE REPAIR KIT(S):	
J			**454-6877**	1	KIT-SPINDLE	
					(INCLUDES SPINDLE, BUSHING, BEARING & PIN)	
L			**454-6869**	1	KIT-LINKAGE	
					(INCLUDES LINKAGE AS, BOLTS, BUSHINGS, RING, ROLLERS & PLATES)	

J - KIT MARKED J SERVICES PART(S) MARKED J
L - KIT MARKED L SERVICES PART(S) MARKED L

454-6848 **SUSPENSION GP-SEAT** (contd.) **i05971103**

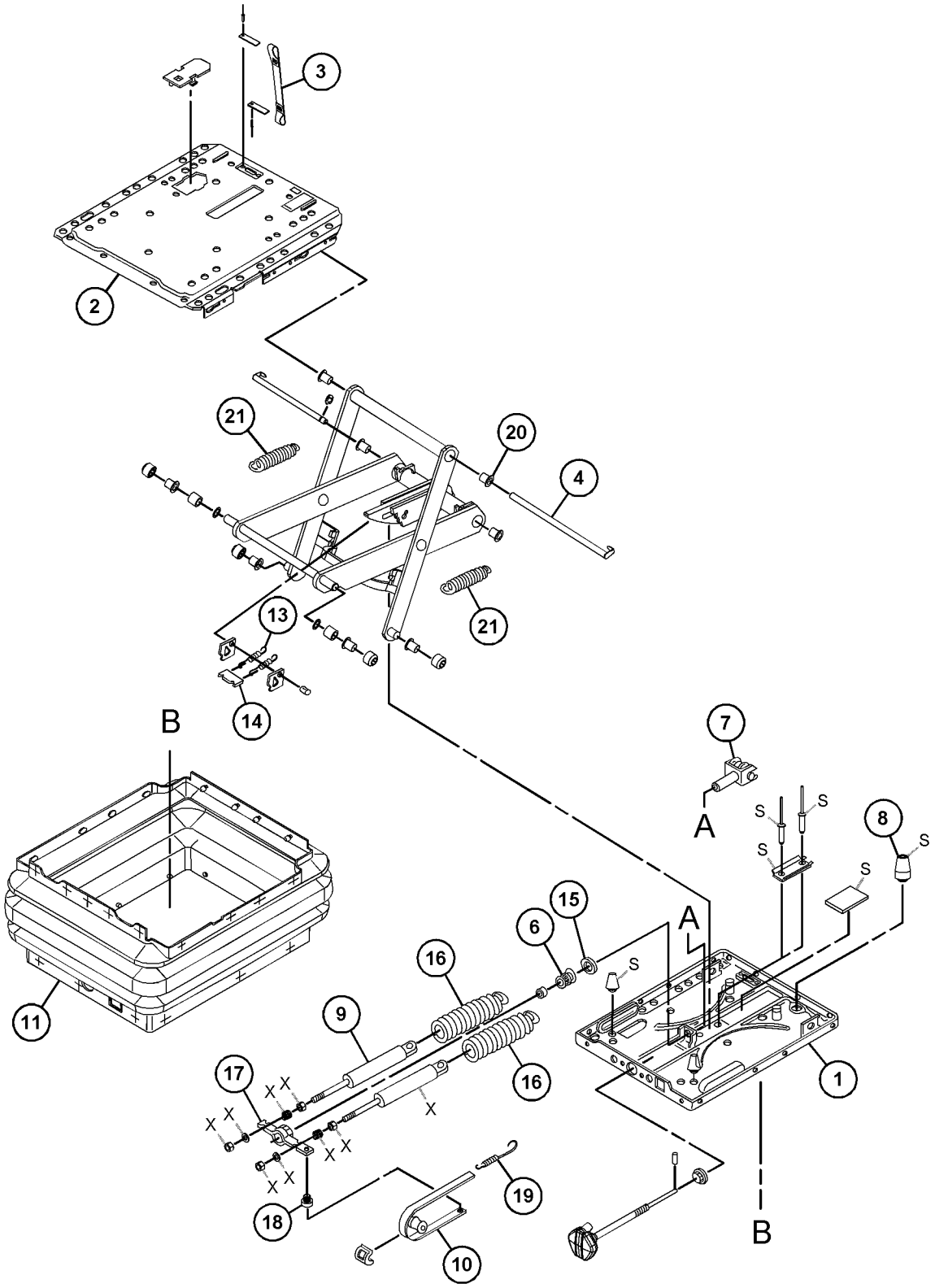

GRAPHIC #1 <END> g03745353

377-1841 TANK GP-WINDOW WASHER

S/N: CH91-UP
3.8-LITER(1-GALLON)
PART OF 396-4423 ELECTRICAL AR
ALSO AN ATTACHMENT

SMCS-7306 **i05867037**

NOTE	REF NO	GRAPHIC REF	PART NUMBER	QTY	PART NAME 1 2 3 4 5 6 (PRODUCT LEVEL)	SEE PAGE
	1	1	**5W-6315**	1	FITTING	
	2	1	**131-3714**	1	TANK AS-WINDOW WASHER	
		1	**7T-8891**	1	PUMP AS-WASHER (24-VOLT)	
		1	**8E-8293**	1	GROMMET	
		1	**322-4964**	1	CAP-VENTED (WINDOW WASHER TANK)	
	3	1	**156-6175**	1	CLIP (LADDER)	
	4	1	**3S-2093**	12	STRAP-CABLE	
	5	1	**4P-7429**	1	CLIP (LADDER)	
M	6	1	**5C-2890**	1	NUT (M6X1-THD)	
M	7	1	**8T-4138**	1	BOLT (M6X1X20-MM)	
	8	1	**9X-8256**	2	WASHER (6.6X12X2-MM THK)	
E	9	1	**144-0195**		HOSE (367-CM)	
E	9A	1	**144-0195**		HOSE (43-CM)	

E - ORDER BY THE CENTIMETER
M - METRIC PART

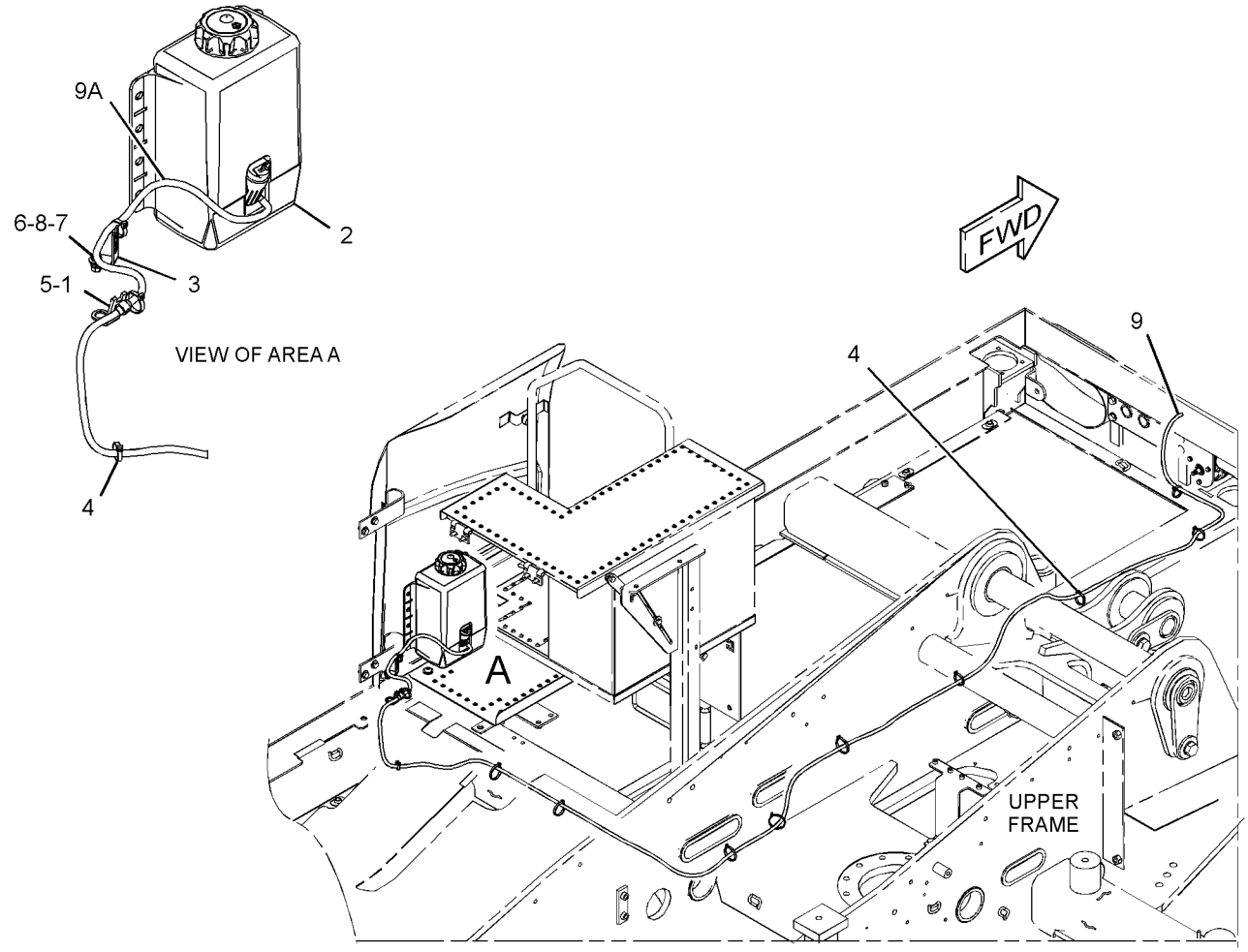

GRAPHIC #1 <END> g03338540

426-2267 TRIM GP-CAB

S/N: CH91-UP
PART OF 426-2270 CAB GP
ALSO AN ATTACHMENT

SMCS-7301, 7329 **i05771068**

NOTE	REF NO	GRAPHIC REF	PART NUMBER	QTY	PART NAME 1 2 3 4 5 6 (PRODUCT LEVEL)	SEE PAGE
	1	1	**4B-4278**	3	WASHER (10.2X20.5X1.6-MM THK)	
	2	1	**4I-1206**	2	GUIDE	
	3	1	**4I-3063**	1	SPRING	
	4	1	**4I-4270**	1	HOLDER-GLASS	
	5	1	**4I-4392**	3	CLIP	
	6	1	**5C-7793**	1	HOOK-COAT	
	7	1	**6V-7636**	4	PIN AS-SPRING	
	8	1	**105-2169**	2	BOLT AS	
	9	1	**133-8016**	1	PACKING	
	10	1	**139-7126**	1	HOLDER	
	11	1	**139-7127**	1	HOLDER	
	12	1	**156-6599**	1	STRIKER	
	13	1	**161-3685**	1	ROD	
	14	1	**434-9163**	1	LEVER AS	
	15	1	**164-0527**	1	ROD	
Y	16	1	*164-0528*	1	LEVER GP-CAB DOOR	856
	17	1	**167-7018**	1	COVER AS	
	18	1	**167-7042**	2	SEAL	
	19	1	**171-7426**	1	CABLE AS	
	20	1	*176-1939*	1	LEVER AS	
M		1	**9X-2044**	1	SCREW-TRUSS HEAD (M6X1X16-MM)	
		1	**176-1937**	1	BRACKET AS	
		1	**176-1938**	1	LEVER	
	21	1	**185-8196**	1	GROMMET	
	22	1	**189-2704**	1	SEAL	
	23	1	**201-4530**	1	BRACKET AS	
M		1	**3E-8020**	4	SCREW-TRUSS HEAD (M6X1X25-MM)	
	23A	1	**205-6295**	1	LATCH AS	
	24	1	**205-0453**	1	BRACKET	
M	26	1	**284-4426**	1	BOLT-WING (M8X1.25X15-MM)	
	27	1	**315-5313**	1	COVER	
	28	1	**416-4309**	1	SEAL	
	29	1	**430-4057**	1	GUARD	
M	30	1	**095-0755**	2	SCREW-MACHINE (M4X0.7X12-MM)	
M	31	1	**099-0823**	3	SCREW-MACHINE (M6X1X6-MM)	
M	32	1	**127-0580**	2	SCREW-FLAT HEAD (M8X1.25X20-MM)	
M	33	1	**129-3180**	2	LOCKNUT (M12X1.75-THD)	
	34	1	**176-1986**	1	LAMP AS-DOME	
		1	**201-4417**	1	LAMP (24-VOLT, 10-WATT)	
	35	1	**1R-5998**	2	LOCKWASHER	
M	36	1	**3E-8020**	6	SCREW-TRUSS HEAD (M6X1X25-MM)	
	37	1	**4I-1205**	2	BUMPER	
	38	1	**4I-3090**	6	SEAL	
	39	1	**7X-0578**	2	WASHER-HARD (10.2X32X2.5-MM THK)	
M	40	1	**8T-4133**	5	NUT (M10X1.5-THD)	
M	41	1	**8T-4190**	4	BOLT (M16X2X25-MM)	

426-2267 **TRIM GP-CAB** (contd.) **i05771068**

NOTE	REF NO	GRAPHIC REF	PART NUMBER	QTY	PART NAME 1 2 3 4 5 6 (PRODUCT LEVEL)	SEE PAGE
	42	1	**8T-4223**	6	WASHER-HARD (13.5X25.5X3-MM THK)	
M	43	1	**8T-4956**	2	BOLT (M12X1.75X35-MM)	
M	44	1	**9X-2041**	1	SCREW-TRUSS HEAD (M10X1.5X20-MM)	
M	45	1	**9X-2042**	5	SCREW-TRUSS HEAD (M6X1X12-MM)	
M	46	1	**9X-2044**	5	SCREW-TRUSS HEAD (M6X1X16-MM)	
M	47	1	**9X-2045**	2	SCREW-TRUSS HEAD (M6X1X20-MM)	
	48	1	**9X-8257**	6	WASHER (17.5X30X3.5-MM THK)	
E	49	1	**6I-5470**		SEAL (150-CM)	
	50	1	**277-3430**	1	PLUG-BUTTON	

E - ORDER BY THE CENTIMETER
M - METRIC PART
Y - SEPARATE ILLUSTRATION

426-2267 **TRIM GP-CAB** (contd.) **i05771068**

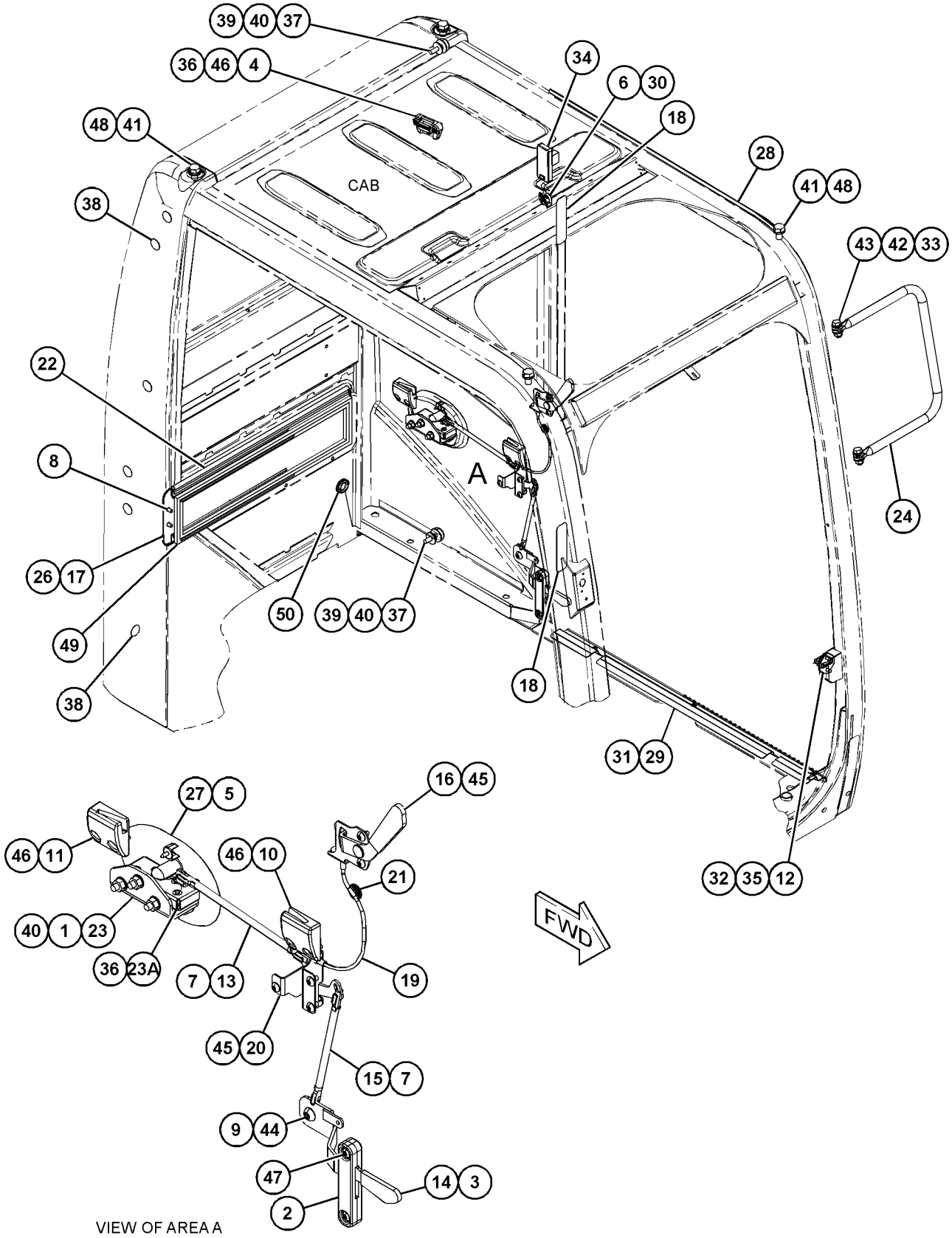

GRAPHIC #1 <END> g03684386

426-2268 TRIM GP-CAB

S/N: CH91-UP
PART OF 426-2270 CAB GP
ALSO AN ATTACHMENT

SMCS-7301, 7329 **i05525110**

NOTE	REF NO	GRAPHIC REF	PART NUMBER	QTY	PART NAME 1 2 3 4 5 6 (PRODUCT LEVEL)	SEE PAGE
	1	1	**170-9724**	5	CLIP	
	2	1	**171-7420**	2	CLIP	
	3	1	**176-1972**	1	COVER	
	4	1	**185-8205**	5	CLIP	
	5	1	**189-2678**	3	SPACER	
	6	1	**234-6491**	1	COVER	
	7	1	**234-6549**	1	COVER	
	8	1	**234-6550**	1	COVER	
	9	1	**235-8922**	1	COVER	
	10	1	**235-8928**	1	LINER	
	11	1	**235-8950**	10	CLIP	
	12	1	**242-1780**	1	BRACKET AS	
	13	1	**303-9447**	2	NUT-SPEED	
	14	1	**388-9091**	1	COVER	
	15	1	**430-4055**	1	BRACKET AS	
M	16	1	**9X-2042**	6	SCREW-TRUSS HEAD (M6X1X12-MM)	
M	17	1	**9X-2044**	2	SCREW-TRUSS HEAD (M6X1X16-MM)	
M	18	1	**9X-2045**	2	SCREW-TRUSS HEAD (M6X1X20-MM)	

M - METRIC PART

426-2268 **TRIM GP-CAB (**contd.**)** **i05525110**

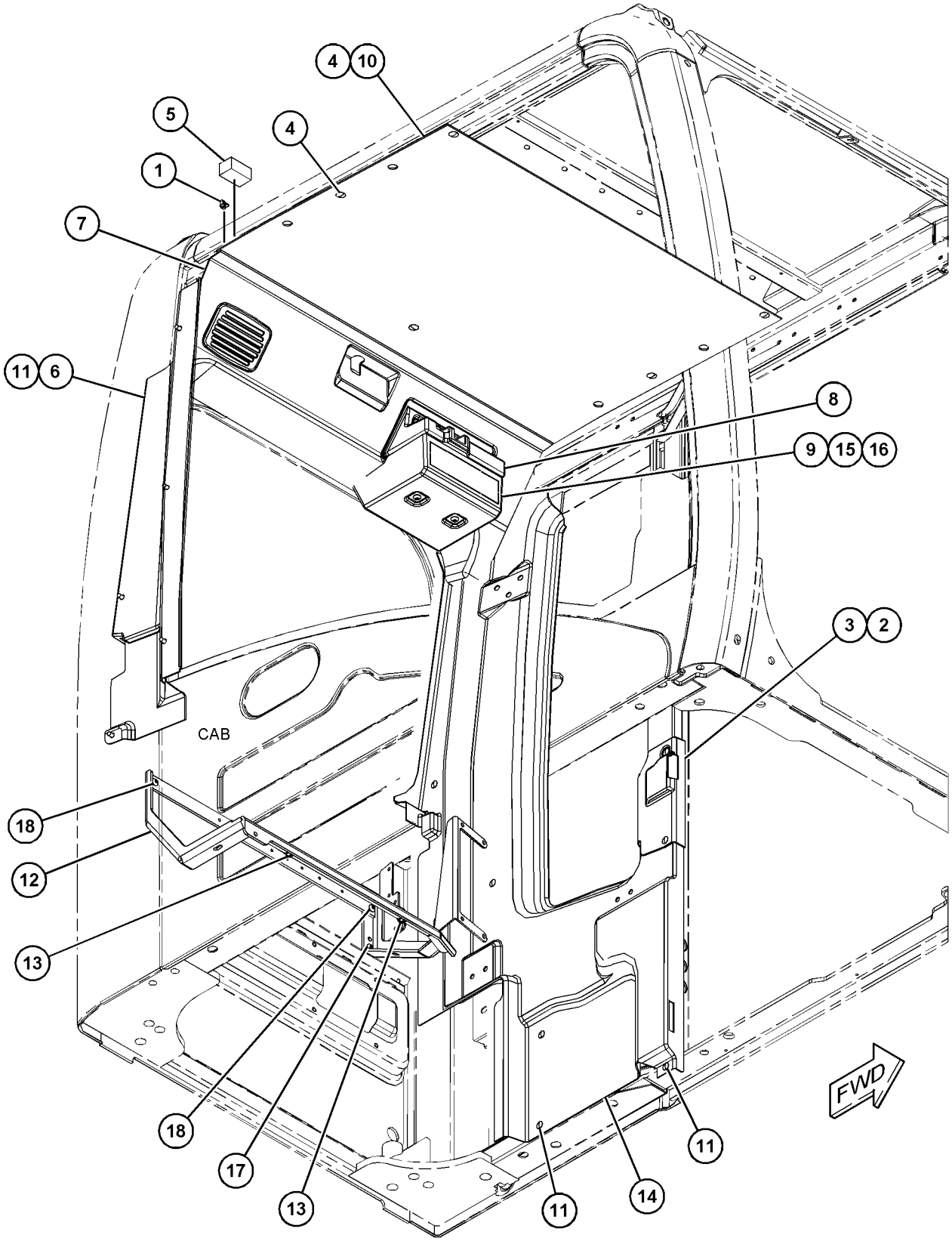

GRAPHIC #1 <END> g03502303

426-2269 TRIM GP-CAB

S/N: CH91-UP
PART OF 426-2270 CAB GP
ALSO AN ATTACHMENT

SMCS-7301, 7329 **i05525111**

NOTE	REF NO	GRAPHIC REF	PART NUMBER	QTY	PART NAME 1 2 3 4 5 6 (PRODUCT LEVEL)	SEE PAGE
	1	1	**234-6468**	1	COVER AS	
		1	**259-7353**	4	CLIP	
	2	1	**234-6470**	1	COVER-MONITOR	
	3	1	**234-6471**	1	COVER-DUCT	
	4	1	**234-6472**	1	COVER	
	5	1	**234-6473**	1	COVER-FRONT (UPPER, RH)	
	6	1	**234-6476**	1	DUCT	
	7	1	**234-6483**	1	BRACKET AS	
	8	1	**234-6485**	1	BRACKET AS	
	9	1	**234-6490**	1	CUP	
	10	1	**234-6497**	1	COVER	
	11	1	**234-6498**	3	RIVET	
	12	1	**234-6521**	1	COVER	
	13	1	**234-6579**	2	NUT-SPEED	
	14	1	**245-7790**	2	SCREW-TAPPING	
	15	1	**253-6914**	1	CASE	
	16	1	**253-6915**	1	INSERT	
	17	1	**253-6919**	1	COVER	
	18	1	**259-7202**	1	ASHTRAY	
	19	1	**352-3206**	1	COVER	
	20	1	**352-3207**	1	PANEL-SWITCH	
	21	1	**396-2351**	1	LOUVER AS	
	22	1	**396-2352**	2	LOUVER AS	
	23	1	*427-8468*	1	BRACKET AS	
M		1	**6V-9632**	3	NUT-WELD (M6X1-THD)	
	24	1	**427-8470**	1	COVER	
M	25	1	**128-2135**	12	SCREW-TRUSS HEAD (M6X1X13-MM)	
M	26	1	**128-2136**	1	SCREW-TRUSS HEAD (M6X1X16-MM)	
	27	1	**234-6469**	1	COVER	
M	28	1	**8T-2396**	1	BOLT (M6X1X60-MM)	
M	29	1	**9X-2042**	12	SCREW-TRUSS HEAD (M6X1X12-MM)	
M	30	1	**9X-2045**	1	SCREW-TRUSS HEAD (M6X1X20-MM)	

M - METRIC PART

426-2269 **TRIM GP-CAB (**contd.**)** **i05525111**

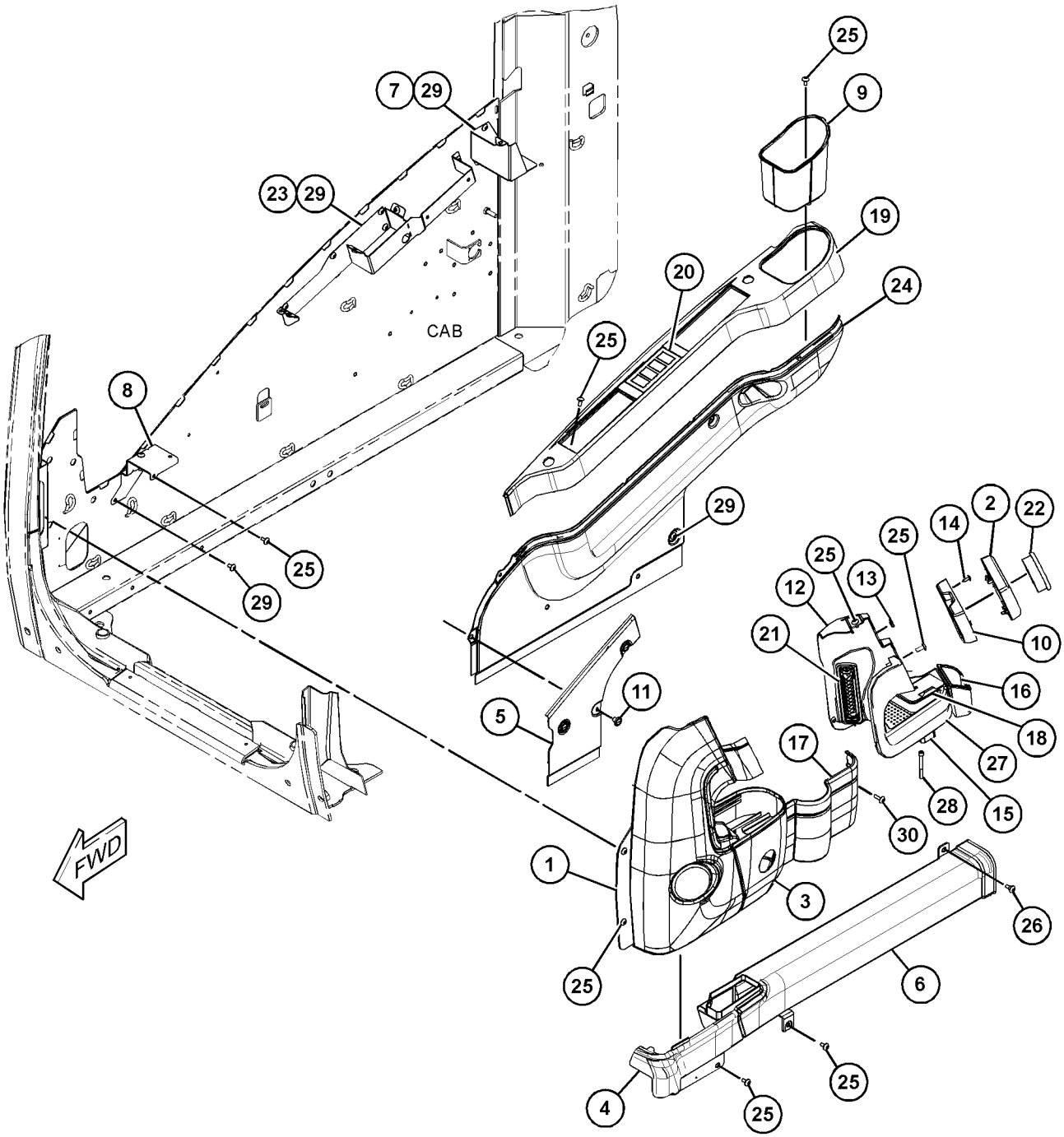

GRAPHIC #1 <END> g03499477

427-8445 VISOR GP-CAB

S/N: CH91-UP
PART OF 426-2270 CAB GP
ALSO AN ATTACHMENT

SMCS-7301 **i05525153**

NOTE	REF NO	GRAPHIC REF	PART NUMBER	QTY	PART NAME 1 2 3 4 5 6 (PRODUCT LEVEL)	SEE PAGE
	1	1	**6C-9089**	5	NUT-CAP	
	2	1	**286-9521**	1	GROMMET	
	3	1	**425-7003**	1	VISOR	
	4	1	**426-2260**	1	BRACKET	
	5	1	**426-2271**	1	BRACKET	
M	6	1	**129-3178**	5	LOCKNUT (M6X1-THD)	
M	7	1	**3E-8020**	1	SCREW-TRUSS HEAD (M6X1X25-MM)	
	8	1	**6C-9130**	15	WASHER (6X18X1-MM THK)	
M	9	1	**8T-4179**	2	BOLT (M12X1.75X20-MM)	
	10	1	**8T-4223**	2	WASHER-HARD (13.5X25.5X3-MM THK)	
M	11	1	**9X-2045**	4	SCREW-TRUSS HEAD (M6X1X20-MM)	

M - METRIC PART

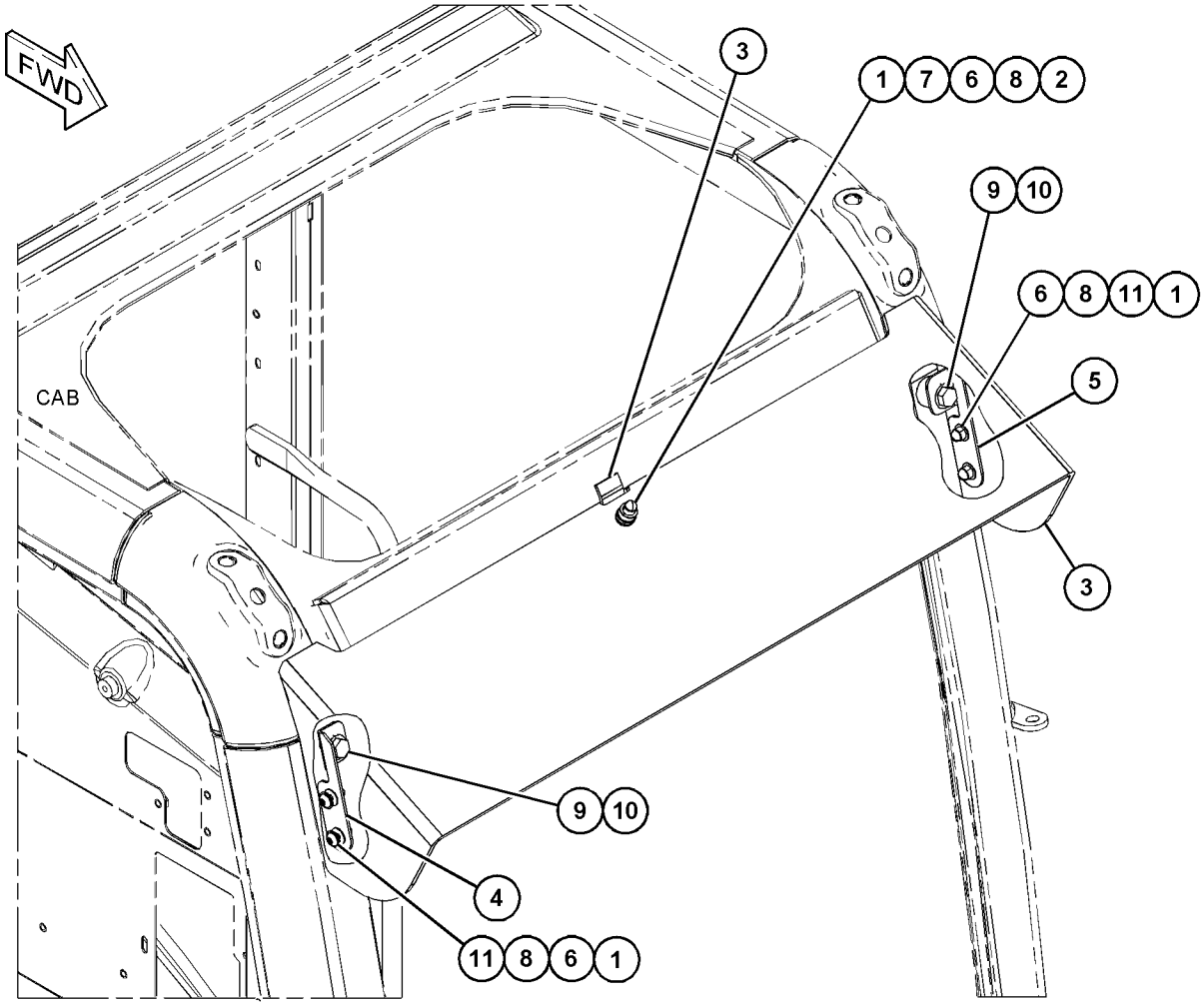

GRAPHIC #1 <END> g03502334

388-9108 WINDOW GP-CAB—FRONT, LOWER

S/N: CH91-UP

PART OF 426-2266 WINDOW GP-CAB

ALSO AN ATTACHMENT

SMCS-7310 **i04665970**

NOTE	REF NO	GRAPHIC REF	PART NUMBER	QTY	PART NAME 1 2 3 4 5 6 (PRODUCT LEVEL)	SEE PAGE
	1	1	**383-6930**	1	GLASS (FRONT, LOWER)	
	2	1	**156-6631**	2	STOP	
	3	1	**305-0361**	1	SEAL	
	4	1	**178-5569**	2	SEAL	
	5	1	**189-2702**	2	SEAL	
	6	1	**139-7119**	2	PLUG	

388-9108 **WINDOW GP-CAB (**contd.**)** **i04665970**

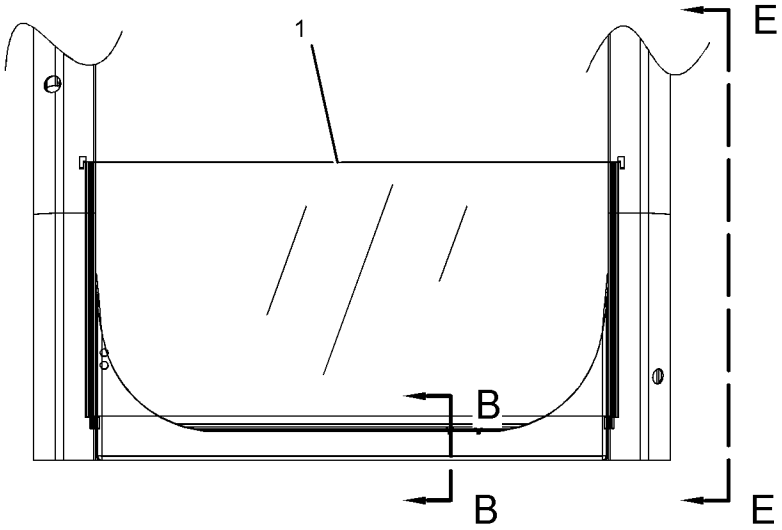

FRONT VIEW

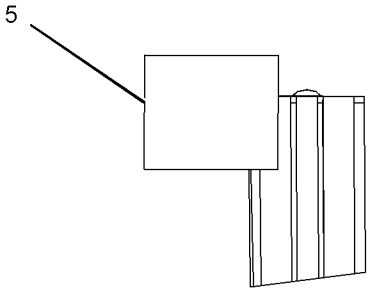

VIEW OF AREA D

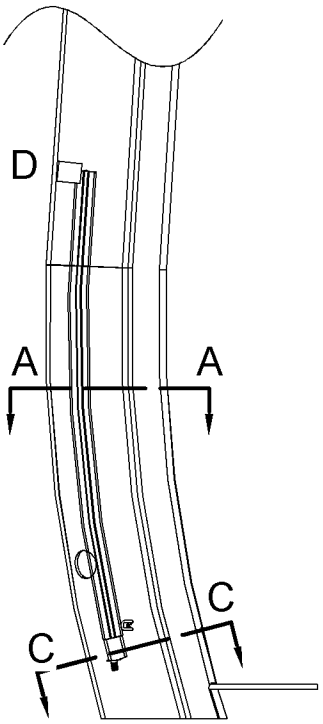

VIEW E-E

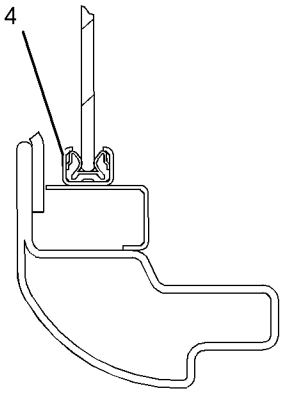

SECTION A-A

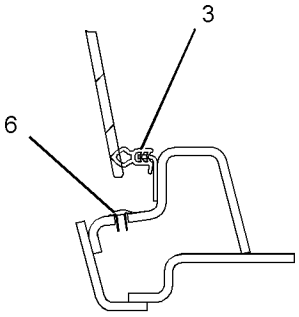

SECTION B-B

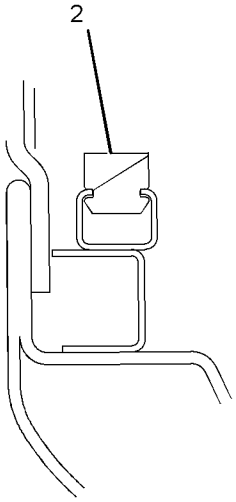

SECTION C-C

GRAPHIC #1 <END> g01398601

426-2265 WINDOW GP-CAB

S/N: CH91-UP
PART OF 426-2270 CAB GP
ALSO AN ATTACHMENT

SMCS-7310 **i05525151**

NOTE	REF NO	GRAPHIC REF	PART NUMBER	QTY	PART NAME 1 2 3 4 5 6 (PRODUCT LEVEL)	SEE PAGE
	1	1	**099-3629**	1	RING-KEY	
	2	1	**164-0666**	1	SEAL	
	3	1	**178-5572**	8	SPACER-SPECIAL (WINDOW)	
	4	1	**383-6929**	1	GLASS	
	5	1	**383-6931**	1	GLASS	
	6	1	**383-6932**	1	GLASS	
	7	1	**426-3899**	1	GLASS	
	8	1	**178-5573**	4	SPACER	
	9	1	**178-5574**	13	SPACER	

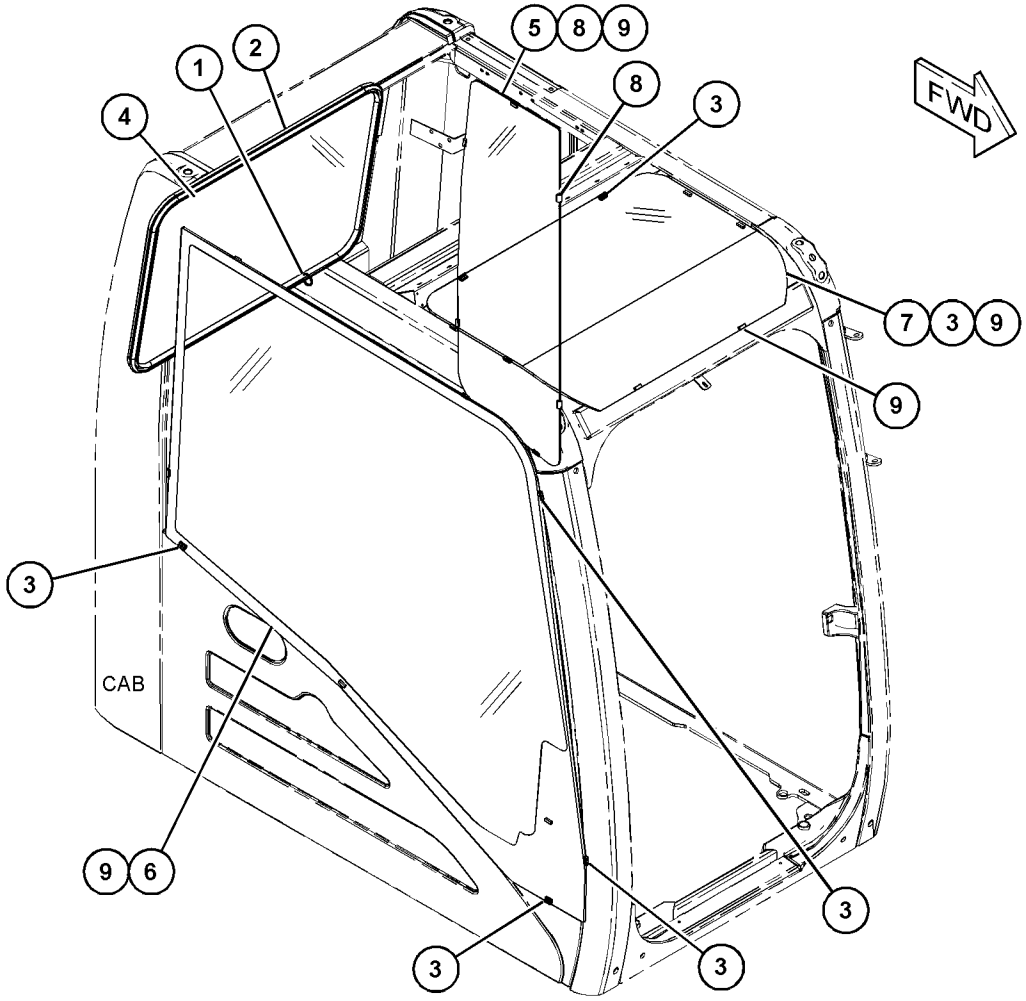

GRAPHIC #1 <END> g03502302

426-2266 WINDOW GP-CAB

S/N: CH91-UP
PART OF 426-2270 CAB GP
ALSO AN ATTACHMENT

SMCS-7310 **i05673469**

NOTE	REF NO	GRAPHIC REF	PART NUMBER	QTY	PART NAME 1 2 3 4 5 6 (PRODUCT LEVEL)	SEE PAGE
	1	1	**170-9722**	1	CUSHION	
	2	2	**4I-0420**	1	STRIP	
	3	1	**7X-0578**	1	WASHER-HARD (10.2X32X2.5-MM THK)	
M	4	2	**8T-6412**	2	SCREW-MACHINE (M6X1X20-MM)	
	5	2	**447-9379**	1	SWITCH AS (WINDOW LOWER LIMIT)	
		2	**6T-3631**	1	NUT-HEX (15/32-32-THD)	
	6	2	**151-6703**	1	HANDLE-PULL	
	7	2	**151-6704**	2	CAP	
	8	2	**151-6813**	1	BRACKET AS	
	9	2	**151-6815**	1	BRACKET AS	
	10	2	**151-6832**	1	LEVER AS	
	11	1	**151-9557**	2	STOP-RUBBER	
	12	1	**156-6554**	1	CABLE AS	
	13	1	**156-6562**	1	BRACKET	
	14	1	**156-6563**	1	CATCH AS	
	15	1	**156-6579**	1	STOP	
	16	1	**156-6627**	1	STOP AS	
	17	2	**161-3684**	2	STOP	
	18	1	**161-3698**	1	SEAL	
	19	1	**164-0648**	1	BRACKET AS	
	20	1	**178-5576**	1	STOP	
M	22	1	**185-8182**	4	BOLT (M10X1.5X20-MM)	
	23	1	**5P-1075**	3	WASHER-HARD (10.2X22.5X3-MM THK)	
	24	2	**185-8221**	1	STOP	
	25	1	**217-6421**	1	PLATE	
	26	2	**273-5345**	1	LINK AS	
	27	2	**273-5346**	1	LINK AS	
	28	1	**438-5685**	1	GLASS-FRONT	
	29	2	**388-9097**	1	COVER	
Y	30	1	*388-9108*	1	WINDOW GP-CAB (FRONT, LOWER)	897
	31	2	**398-7109**	1	LOCK AS	
	32	2	**398-7110**	1	STRIKER AS	
	33	2	**449-2686**	1	BRACKET	
	34	1	**418-8379**	1	SEAL AS	
	35	2	**426-3898**	1	FRAME AS	
M	36	2	**099-0823**	2	SCREW-MACHINE (M6X1X6-MM)	
M	37	1	**142-0485**	1	NUT (M10X1.5-THD)	
	38	1,2	**151-9576**	4	ROLLER	
M	40	1,2	**9X-2042**	18	SCREW-TRUSS HEAD (M6X1X12-MM)	
M	41	2	**9X-2043**	2	SCREW-TRUSS HEAD (M6X1X14-MM)	
M	42	1,2	**9X-2044**	5	SCREW-TRUSS HEAD (M6X1X16-MM)	
M	43	1	**9X-2045**	3	SCREW-TRUSS HEAD (M6X1X20-MM)	
	44	2	**9X-8256**	2	WASHER (6.6X12X2-MM THK)	

M - METRIC PART
Y - SEPARATE ILLUSTRATION

426-2266 **WINDOW GP-CAB** (contd.) **i05673469**

REFER TO ALL ILLUSTRATIONS OF THIS GROUP FOR AUXILIARY VIEWS

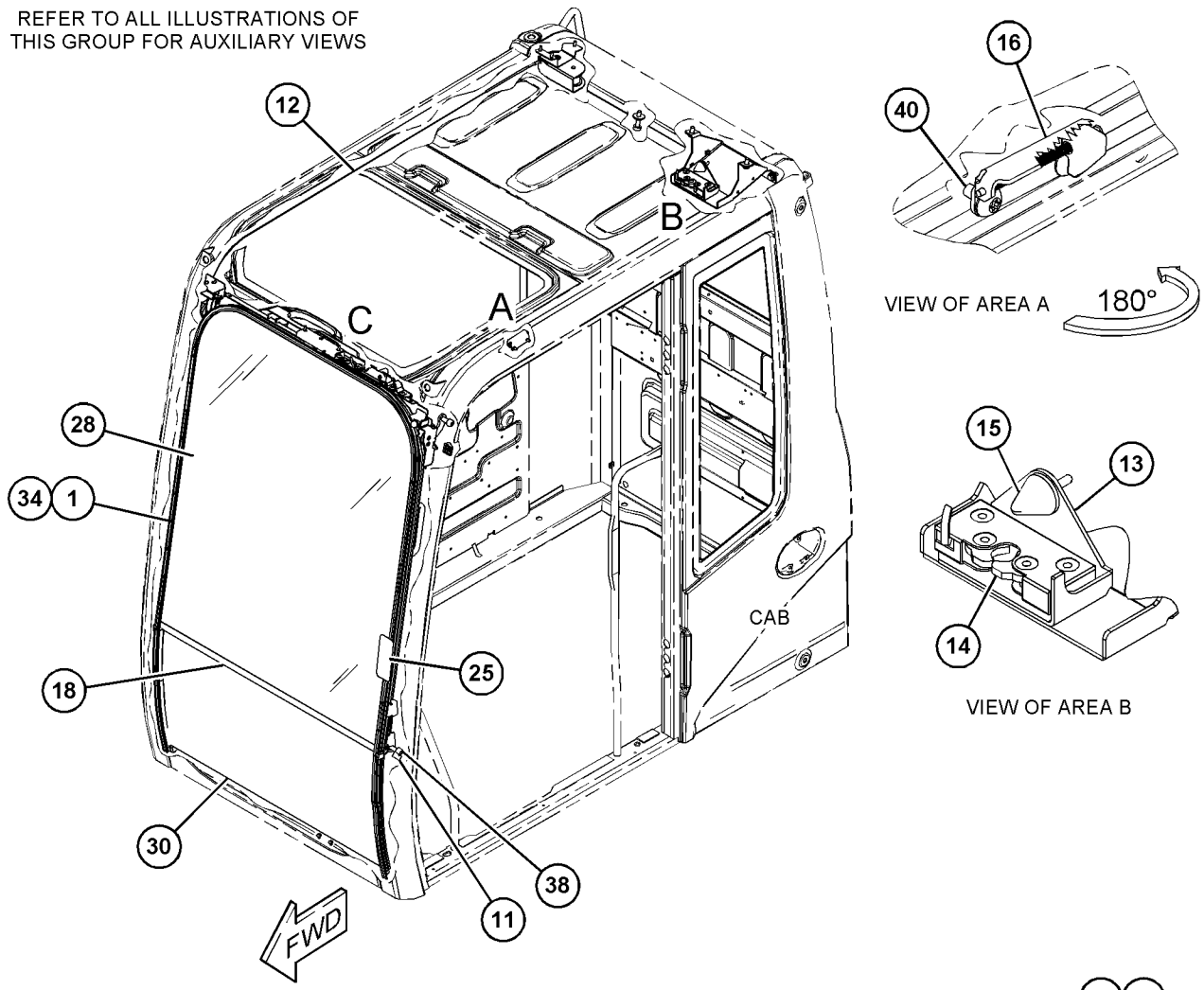

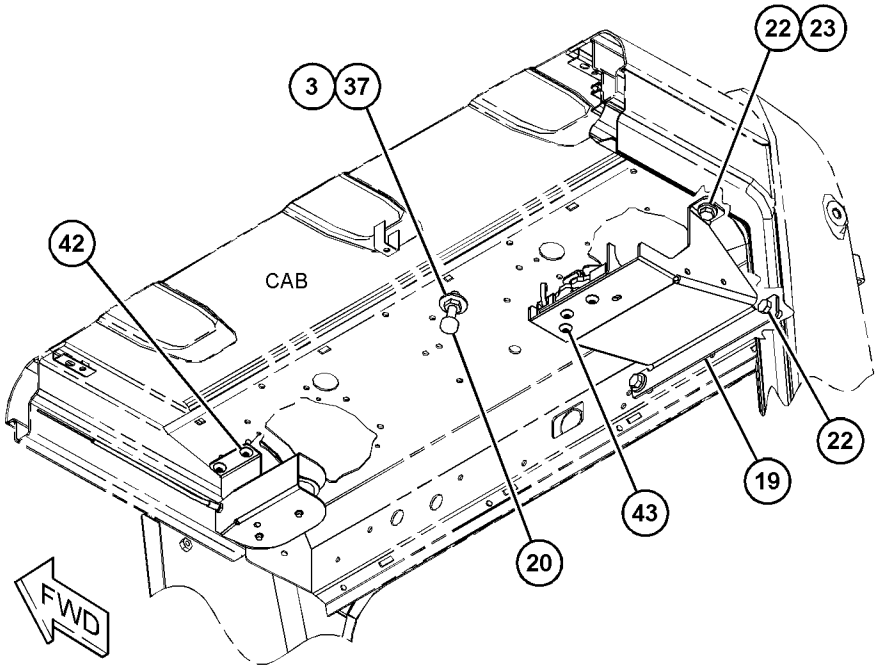

GRAPHIC #1 g03691761

426-2266 **WINDOW GP-CAB (**contd.**)** **i05673469**

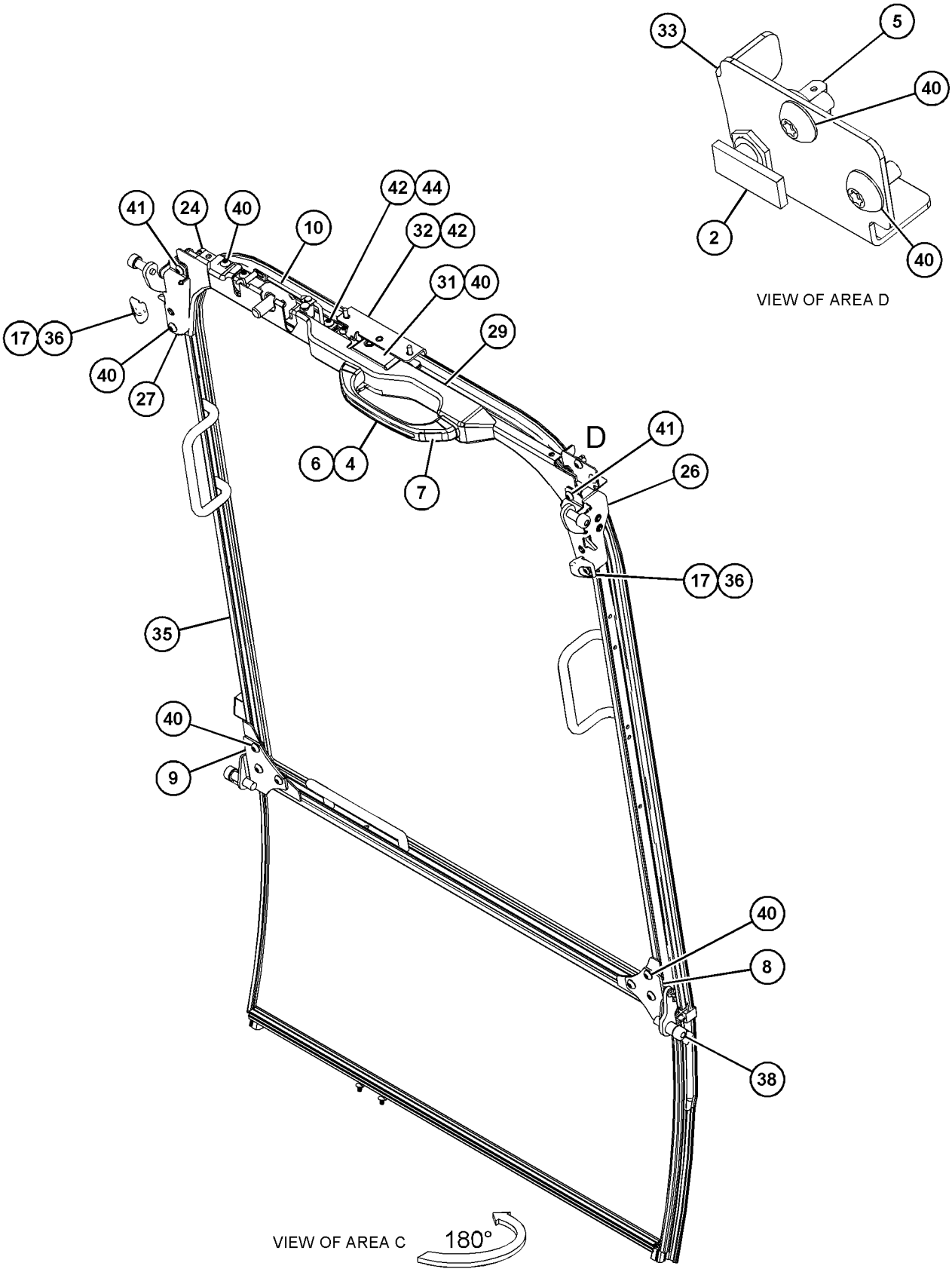

GRAPHIC #2 <END> g03691762

384-6533 WINDOW GP-DOOR

S/N: CH91-UP
PART OF 388-9105 PARTS GP-DOOR
ALSO AN ATTACHMENT

SMCS-7308, 7310 **i05444051**

NOTE	REF NO	GRAPHIC REF	PART NUMBER	QTY	PART NAME 1 2 3 4 5 6 (PRODUCT LEVEL)	SEE PAGE
	1	1	**385-8757**	2	CATCH AS	
	2	1	**387-2846**	1	GLASS	
	3	1	**387-2847**	1	GLASS	
	4	1	**387-2848**	1	PILLAR	
	5	1	**387-2849**	1	HOOK	
	6	1	**438-4951**	1	SEAL	
	7	1	**438-4952**	1	SEAL	
	8	1	**438-4953**	1	SEAL	
	9	1	**438-4954**	1	SEAL	
	10	1	**438-4955**	1	SEAL	
	11	1	**438-4956**	1	SEAL	
	12	1	**438-4957**	1	SEAL	
	13	1	**438-4958**	1	SEAL	
E	14	1	**430-4119**		RUBBER (10-CM)	
E	14A	1	**430-4119**		RUBBER (5.2-CM EACH)	

E - ORDER BY THE CENTIMETER

384-6533 **WINDOW GP-DOOR (**contd.**)** **i05444051**

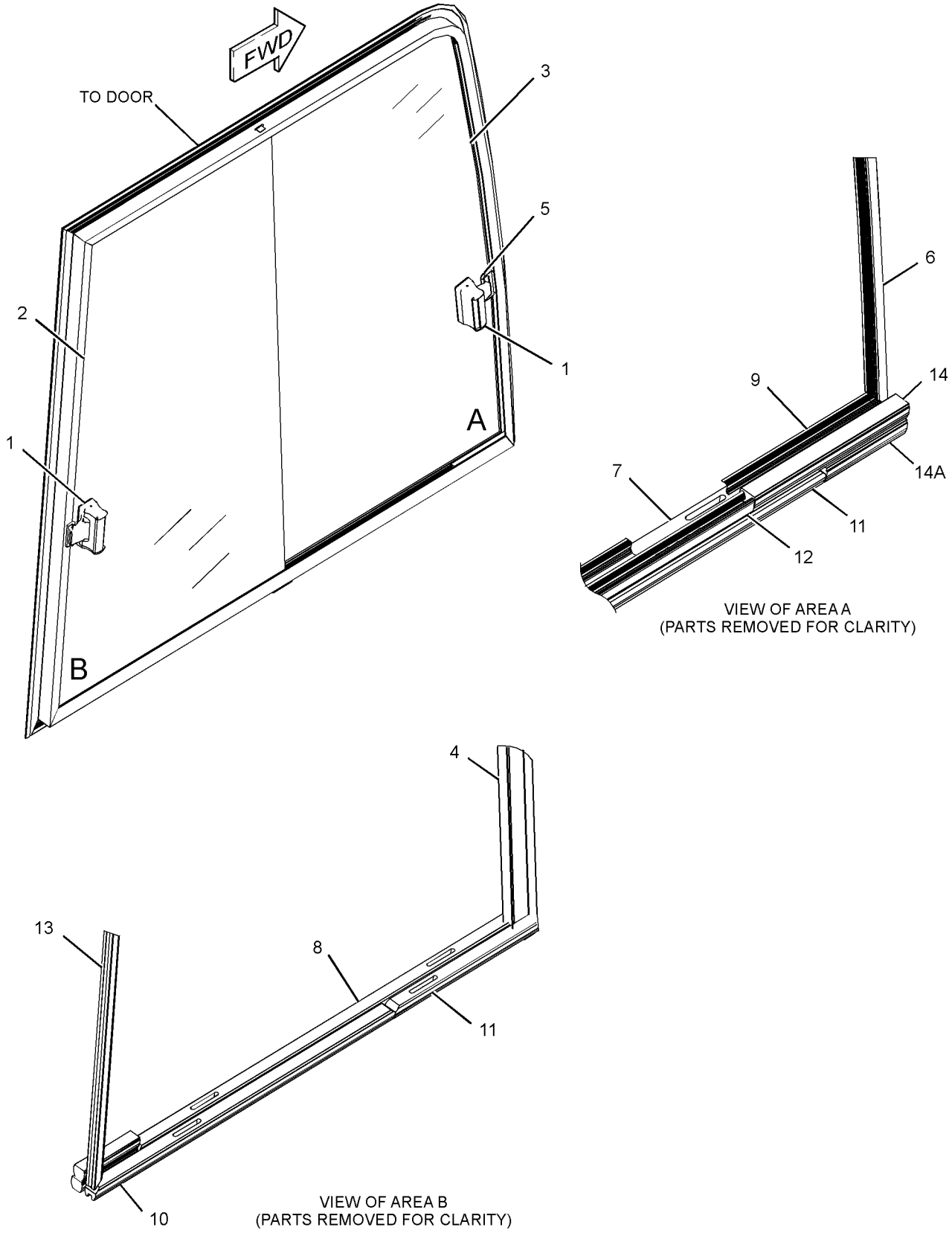

GRAPHIC #1 <END> g03405579

433-1658 WIPER GP-WINDOW

S/N: CH91-UP
PART OF 396-6834 CAB AR
ALSO AN ATTACHMENT

SMCS-7305 **i05553930**

NOTE	REF NO	GRAPHIC REF	PART NUMBER	QTY	PART NAME 1 2 3 4 5 6 (PRODUCT LEVEL)	SEE PAGE
	1	1	**8T-5400**	1	CONNECTOR	
	2	1	**323-3272**	1	MOTOR GP-WINDOW WIPER (24-VOLT)	
		1	**8T-8729**	4	PIN-CONNECTOR (16-GA TO 20-GA)	
		1	**151-9274**	1	KIT-RECEPTACLE (4-PIN)	
					(INCLUDES RECEPTACLE AS & WEDGE)	
	3	1	**357-0994**	1	BRACKET AS	
Y	4	1	**434-6242**	1	BLADE GP	759
	5	1	**434-6243**	1	ARM AS	
	6	1	**434-6244**	1	LINKAGE AS	
		1	**218-2657**	2	COVER	
	7	1	**8T-4121**	4	WASHER-HARD (11X21X2.5-MM THK)	
M	8	1	**8T-4136**	4	BOLT (M10X1.5X25-MM)	

M - METRIC PART
Y - SEPARATE ILLUSTRATION

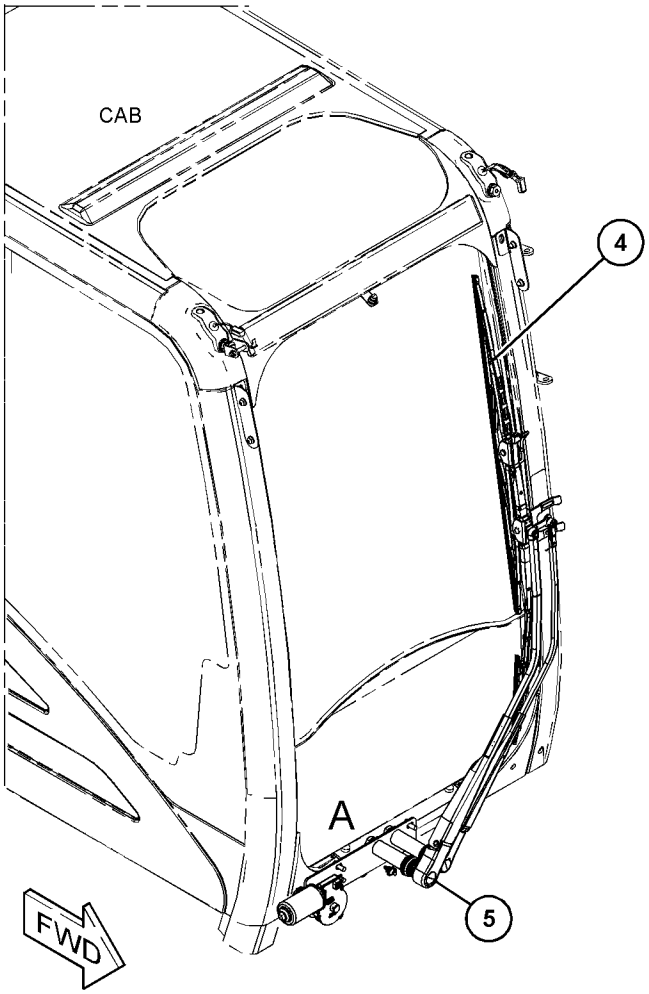

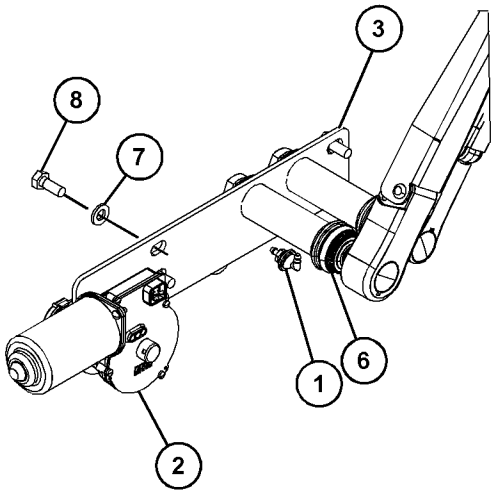

VIEW OF AREA A

GRAPHIC #1 <END> g03519881

276-5560 BOX GP-TOOL

S/N: CH91-UP
PART OF 254-9400 STEP GP-TOOL BOX
ALSO AN ATTACHMENT

SMCS-7259 **i05511549**

NOTE	REF NO	GRAPHIC REF	PART NUMBER	QTY	PART NAME 1 2 3 4 5 6 (PRODUCT LEVEL)	SEE PAGE
	1	1	**203-4464**	2	MOUNT-RESILIENT	
	2	1	**238-7441**	1	LATCH	
	3	1	**252-9844**	1	STEP AS	
	4	1	**265-5331**	1	TOOL BOX AS	
M	5	1	**3T-0851**	2	LOCKNUT (M5X0.8-THD)	
M	6	1	**5C-2890**	2	NUT (M6X1-THD)	
M	7	1	**7Y-7388**	2	SCREW-BUTTON HEAD (M5X0.8X12-MM)	
M	8	1	**8T-4200**	4	BOLT (M8X1.25X16-MM)	
	9	1	**8T-4224**	4	WASHER-HARD (8.8X16X2-MM THK)	
	10	1	**9X-6165**	6	WASHER (6.5X22X2.5-MM THK)	

M - METRIC PART

276-5560 **BOX GP-TOOL (**contd.**)** **i05511549**

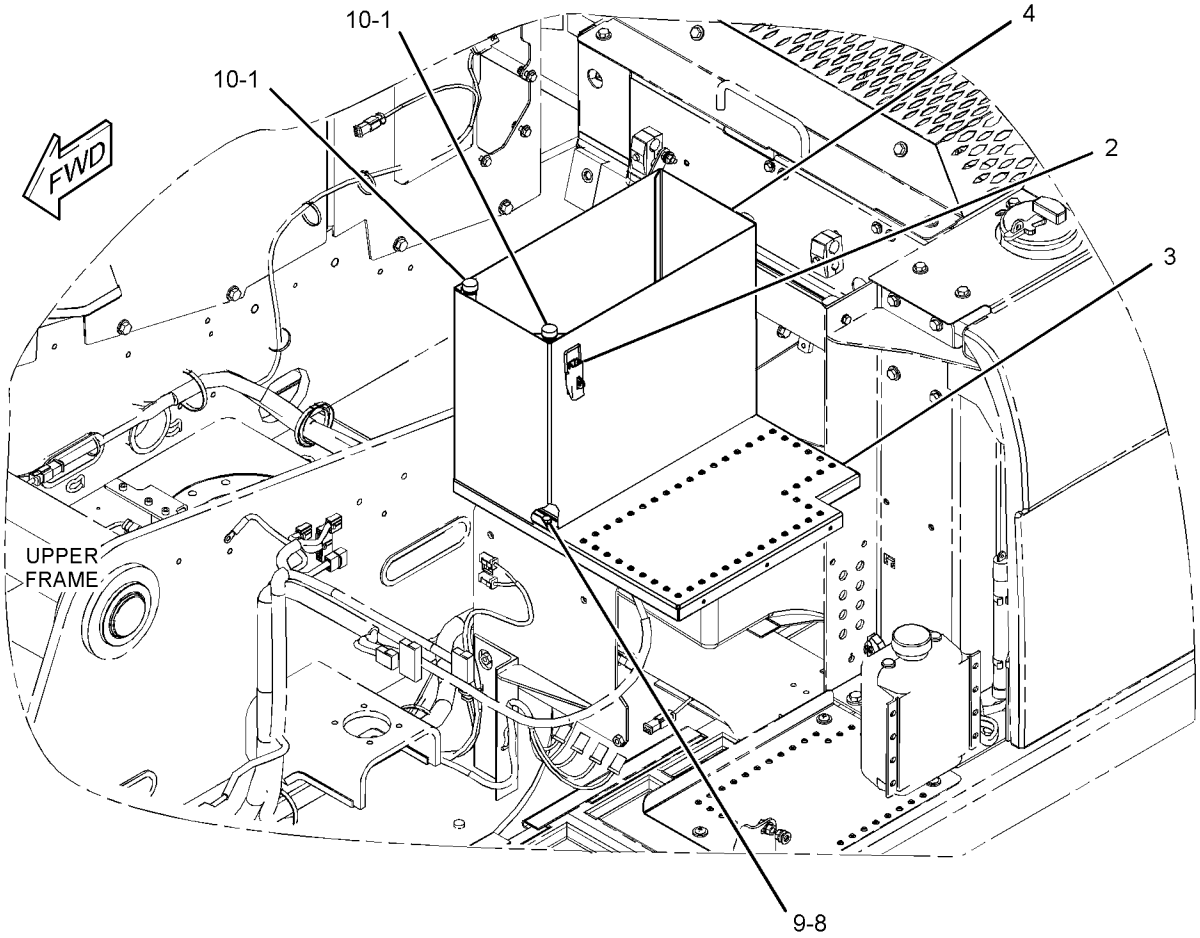

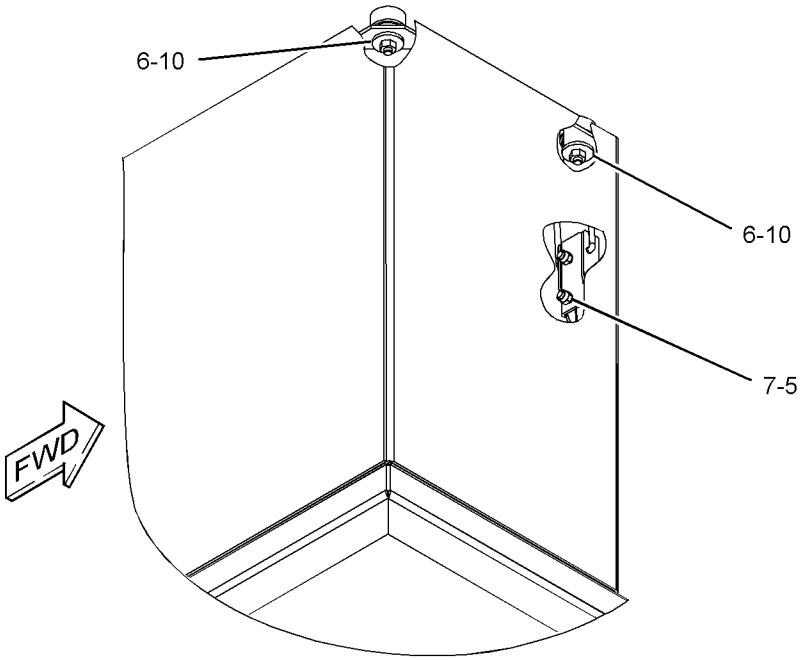

GRAPHIC #1 <END> g01318896

417-8265 BOX GP-TOOL—STEP

S/N: CH91-UP
PART OF 417-8207 MOUNTING GP-STEP & TOOL BOX
ALSO AN ATTACHMENT

SMCS-7259 **i05815589**

NOTE	REF NO	GRAPHIC REF	PART NUMBER	QTY	PART NAME 1 2 3 4 5 6 (PRODUCT LEVEL)	SEE PAGE
	1	1	**238-8015**	1	PIN AS	
	2	1	*364-7010*	1	DOOR GP-TOOL BOX	
		1	**6V-6957**	1	LATCH AS-HANDLE	
		1	**8T-9082**	5	RIVET-POP	
	3	1	**417-8264**	1	BOX AS	
M	4	1	**3T-0852**	2	LOCKNUT (M8X1.25-THD)	
M	5	1	**5C-7261**	8	NUT (M8X1.25-THD)	
M	6	1	**7I-2272**	2	BOLT (M5X0.8X12-MM)	
M	7	1	**7X-2537**	2	BOLT (M8X1.25X35-MM)	
	8	1	**8T-0328**	2	WASHER-HARD (5.5X10X1-MM THK)	
M	9	1	**8T-4189**	8	BOLT (M8X1.25X20-MM)	
	10	1	**8T-4224**	20	WASHER-HARD (8.8X16X2-MM THK)	
E	11	1	**118-7987**		SEAL (224-CM)	

E - ORDER BY THE CENTIMETER
M - METRIC PART

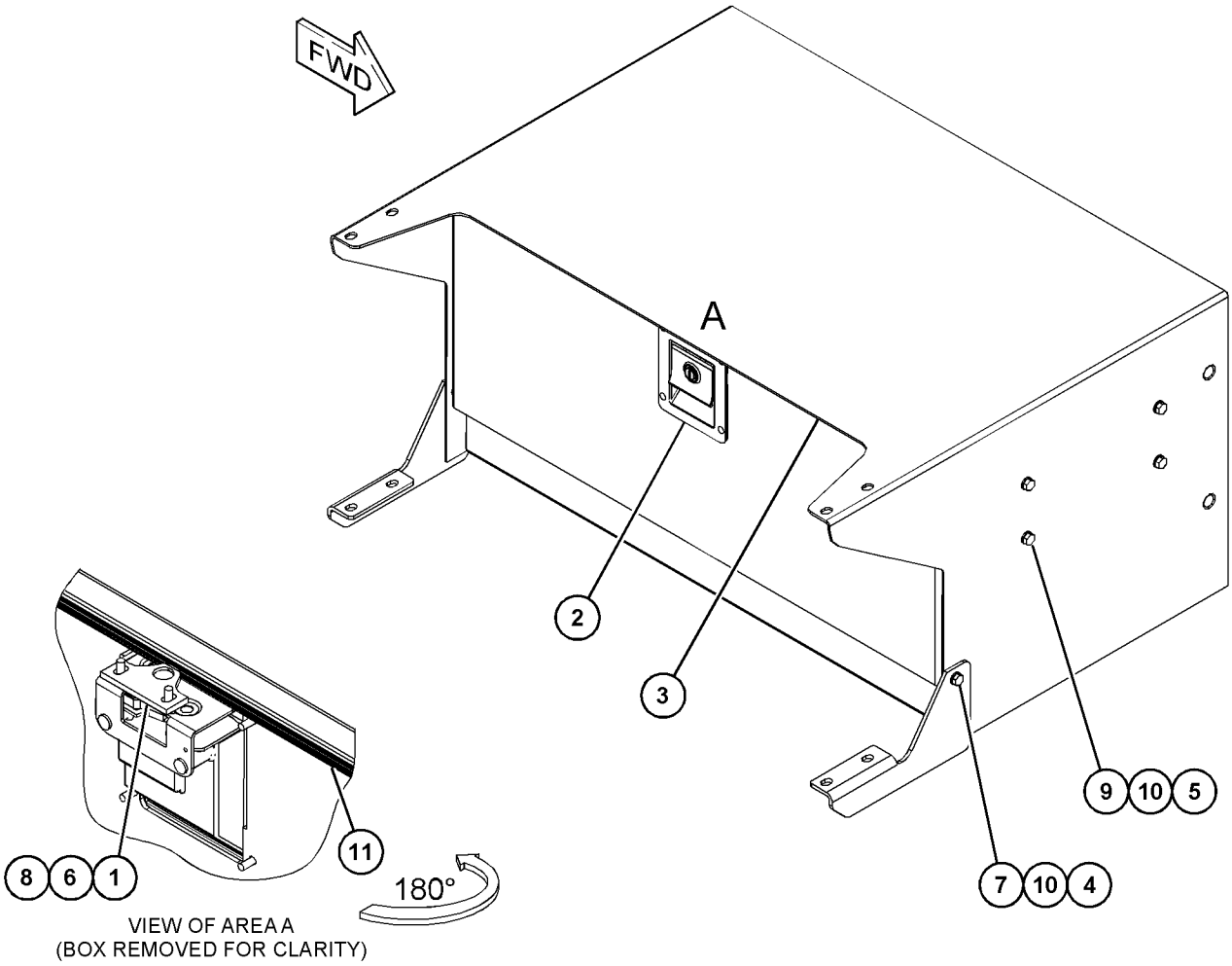

GRAPHIC #1 <END> g03581059

253-2270 FILM GP—MINERAL-BASED HYDRAULIC OIL

S/N: CH91-UP
PART OF 449-2823 COMMON AR
ALSO AN ATTACHMENT

SMCS-7405, 7557 **i05513189**

NOTE	REF NO	GRAPHIC REF	PART NUMBER	QTY	PART NAME 1 2 3 4 5 6 (PRODUCT LEVEL)	SEE PAGE
	1	1	**158-7864**	1	FILM-IDENTIFICATION (HYDRAULIC OIL)	

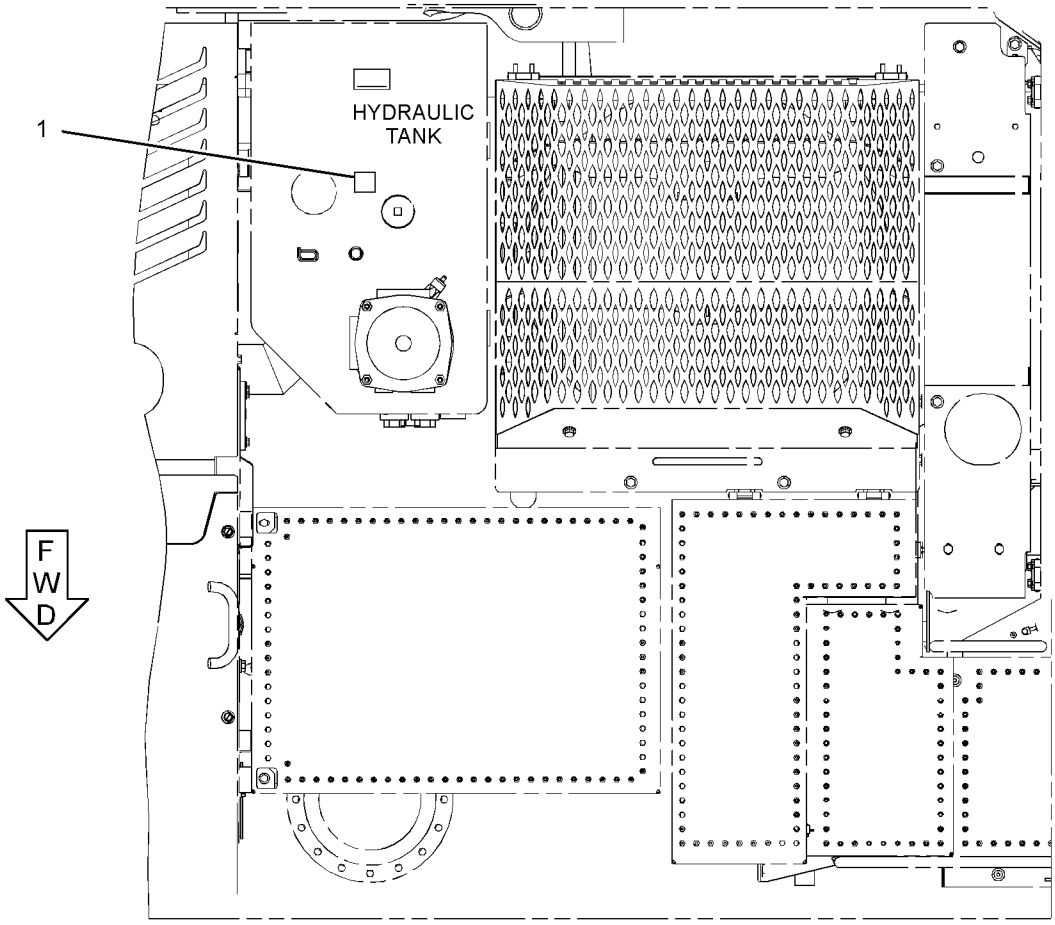

TOP VIEW

GRAPHIC #1 <END> g03340249

415-5625 FILM GP

S/N: E7A1-UP
PART OF 446-6728 ENGINE AR-PRIMARY
ALSO AN ATTACHMENT

SMCS-7405, 7557 **i06041155**

NOTE	REF NO	GRAPHIC REF	PART NUMBER	QTY	PART NAME 1 2 3 4 5 6 (PRODUCT LEVEL)	SEE PAGE
	1	1	**451-7225**	1	FILM-IDENTIFICATION (CAT)	

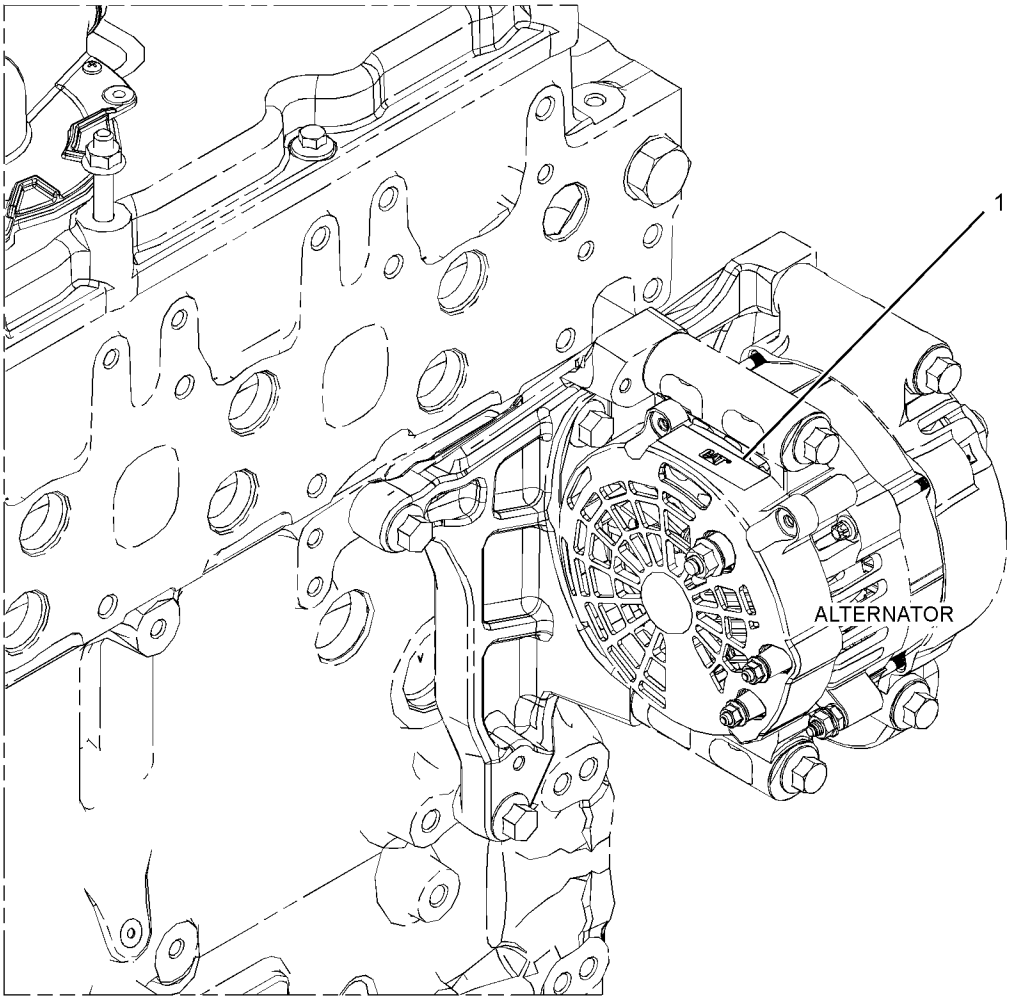

GRAPHIC #1 <END> g02675436

435-3441 FILM GP–1-PIECE BOOM

S/N: CH91-UP
PART OF 425-9130 BOOM AR
AN ATTACHMENT

SMCS-7405, 7557 **i05922286**

NOTE	REF NO	GRAPHIC REF	PART NUMBER	QTY	PART NAME 1 2 3 4 5 6 (PRODUCT LEVEL)	SEE PAGE
	1	1	**230-0859**	1	FILM-IDENTIFICATION (GREASE POINTS, READ OMM)	
	2	1	**292-4450**	1	FILM-IDENTIFICATION (CAT, LH)	
	3	1	**292-4451**	1	FILM-IDENTIFICATION (CAT, RH)	
	4	1	**310-1424**	1	FILM-INSTRUCTION (HYDRAULIC OIL LEVEL CHECK)	

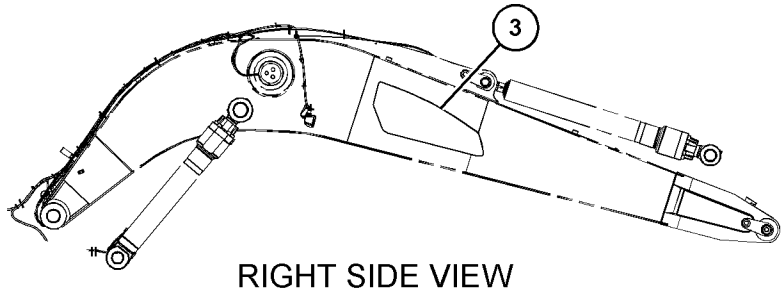

RIGHT SIDE VIEW
(BOOM)

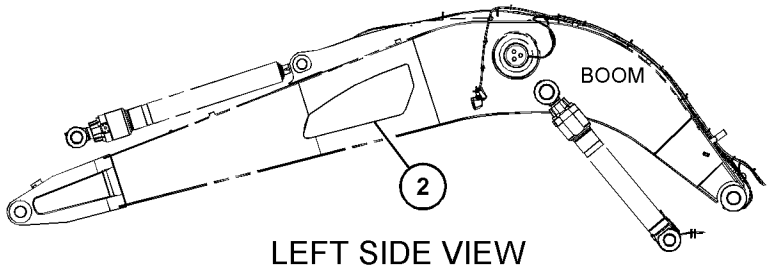

LEFT SIDE VIEW

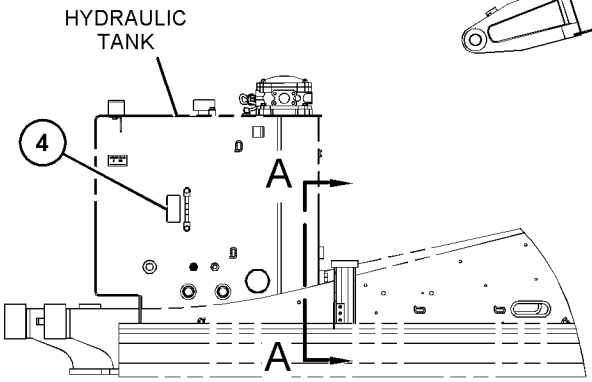

RIGHT SIDE VIEW

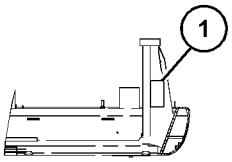

VIEW A-A

GRAPHIC #1 <END> g03572196

435-3504 FILM GP—VARIABLE ADJUSTABLE BOOM

S/N: CH91-UP
PART OF 446-2727 BOOM AR
AN ATTACHMENT

SMCS-7405, 7557 **i05927215**

NOTE	REF NO	GRAPHIC REF	PART NUMBER	QTY	PART NAME 1 2 3 4 5 6 (PRODUCT LEVEL)	SEE PAGE
	1	1	**230-0859**	1	FILM-IDENTIFICATION (GREASE POINTS, READ OMM)	
	2	1	**292-4450**	1	FILM-IDENTIFICATION (CAT, LH)	
	3	1	**292-4451**	1	FILM-IDENTIFICATION (CAT, RH)	
	4	1	**310-1424**	1	FILM-INSTRUCTION (HYDRAULIC OIL LEVEL CHECK)	

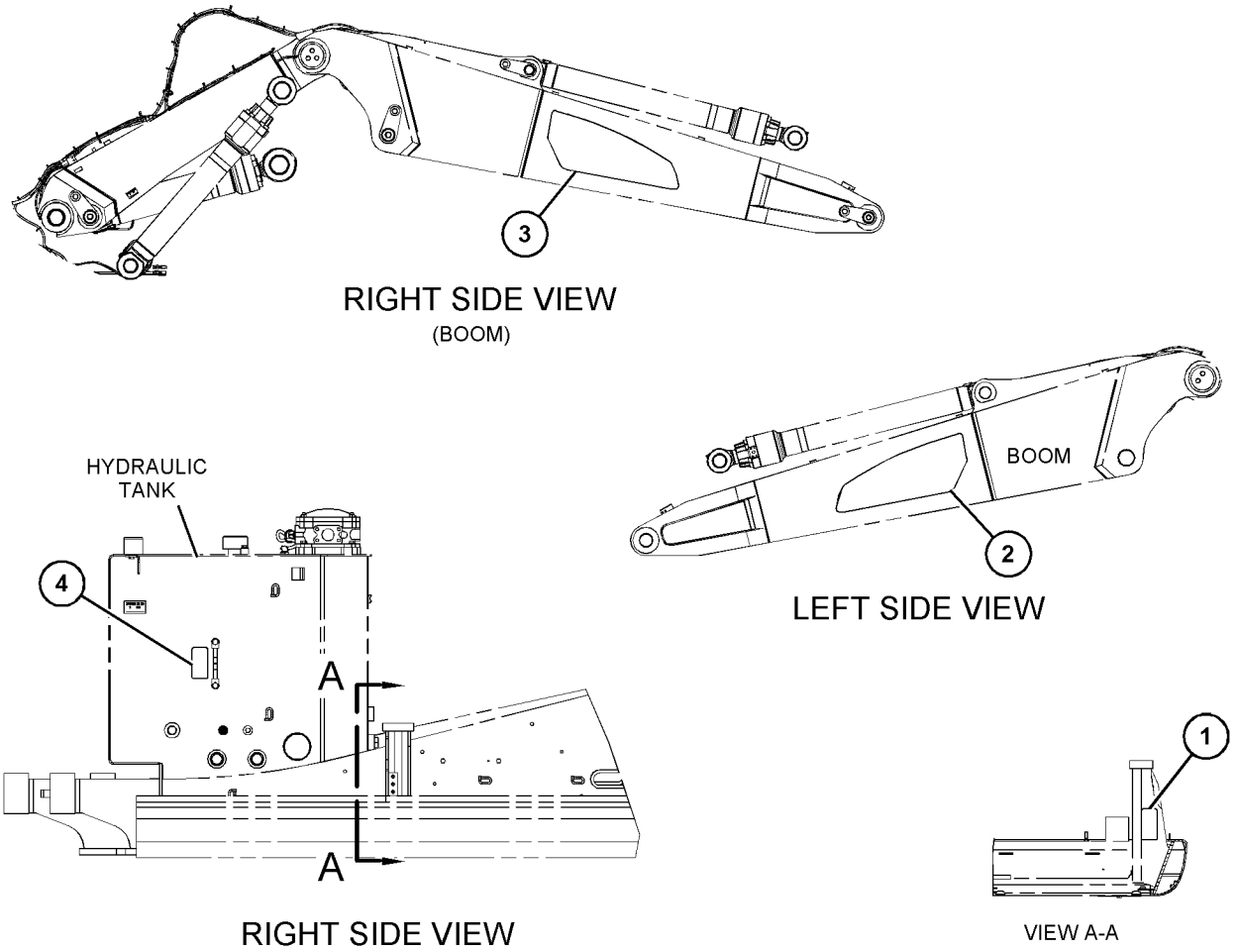

GRAPHIC #1 <END> g03568301

253-2259 PLATE & FILM GP—ENGLISH

S/N: CH91-UP

AN ATTACHMENT

SMCS-7405, 7557 **i06822922**

NOTE	REF NO	GRAPHIC REF	PART NUMBER	QTY	PART NAME 1 2 3 4 5 6 (PRODUCT LEVEL)	SEE PAGE
	1	1	**228-2615**	1	FILM-WARNING (UNIVERSAL, U.S.)	
	2	1	**227-7390**	1	FILM-WARNING (SEAT BELT)	
	3	1	**224-9718**	1	FILM-WARNING (POWER LINES CLEARANCE)	
	4	1	**224-8945**	1	FILM-WARNING (DO NOT USE ETHER, U.S.)	
	5	1	**225-0313**	1	FILM-WARNING (JUMP START, READ OMM, U.S.)	
	6	1	**225-4256**	1	FILM-WARNING (HOT FLUID UNDER PRESSURE, U.S.)	
	7	1	**281-4663**	1	FILM-WARNING (NO CLRN, NO HAND, READ OMM)	
	8	1	**299-6044**	1	FILM-WARNING (CRUSH HAZARD, CAB, READ OMM)	
	9	1	**335-0642**	1	FILM-WARNING (TIPPING HAZARD, READ OMM)	
	10	1	**228-2780**	2	FILM-WARNING (MACHINE SWING, CRUSHING, U.S.)	
	11	1	**279-5016**	3	FILM-WARNING (HIGH PRESS CYLINDER, READ OMM)	
	12	1	**268-8872**	1	FILM-WARNING (CRUSH HAZARD, READ OMM, U.S.)	
	13	1	**372-8052**	1	FILM-WARNING (TIGHTEN WHEEL BOLTS, OMM, U.S.)	
	14	1	**313-2048**	2	FILM-WARNING (CRUSH HAZARD, STAY BACK, U.S.)	
	15	1	**260-7652**	1	FILM-WARNING (PRODUCT LINK 300, U.S.)	
	16	1	**307-0047**	1	FILM-INFORMATION (PRODUCT LINK, READ OMM)	

253-2259 **PLATE & FILM GP (**contd.**)** **i06822922**

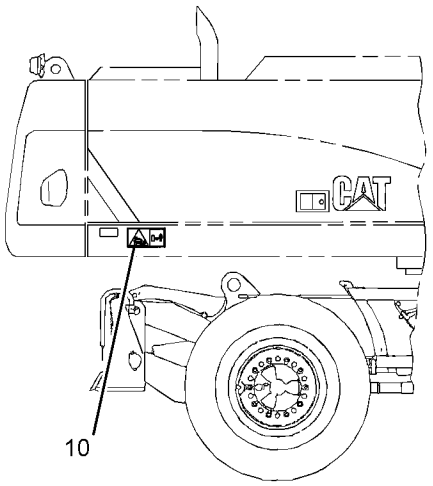

RIGHT SIDE VIEW

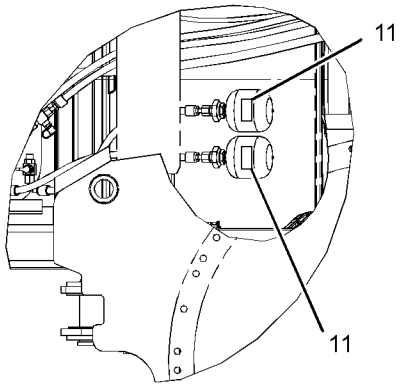

TOP VIEW
(PILOT LINES)

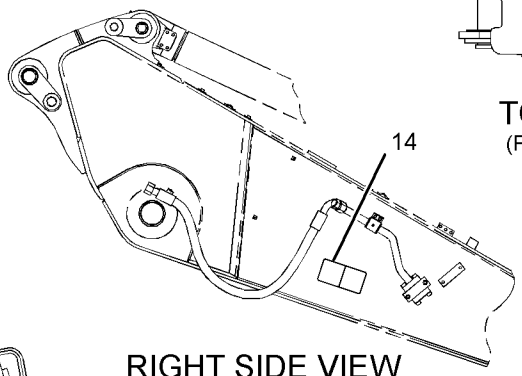

RIGHT SIDE VIEW
(STICK)

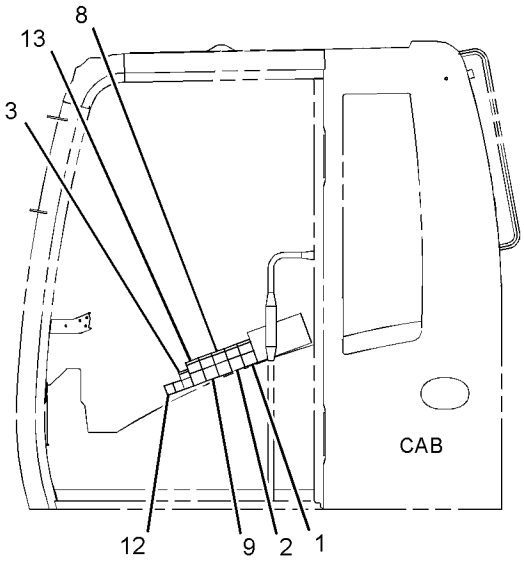

LEFT SIDE VIEW

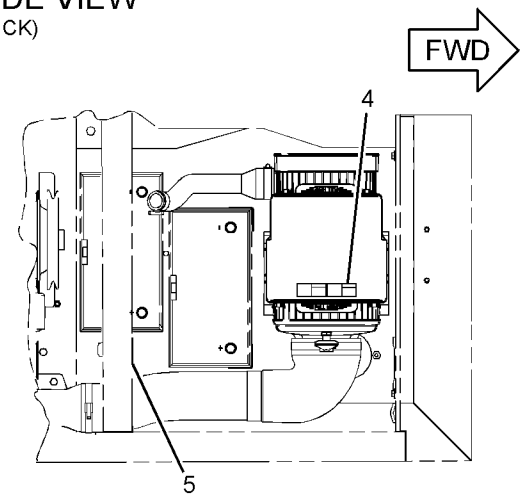

TOP VIEW
(AIR CLEANER)

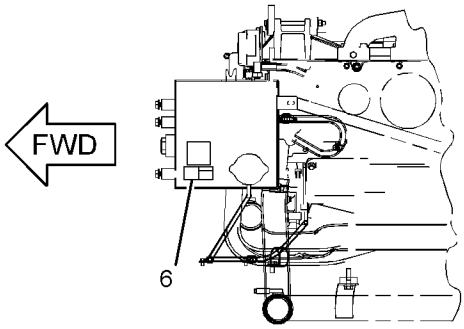

TOP VIEW
(ENGINE)

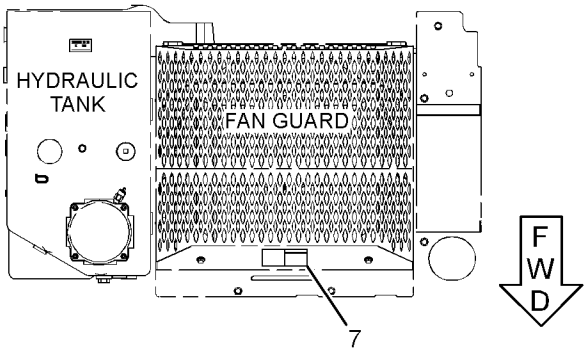

TOP VIEW

GRAPHIC #1 g03236059

253-2259 **PLATE & FILM GP (**contd.**)** **i06822922**

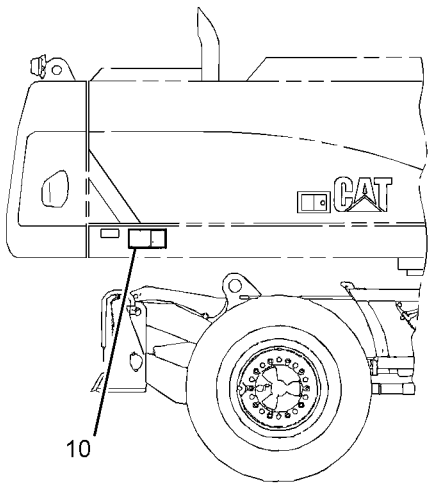

RIGHT SIDE VIEW

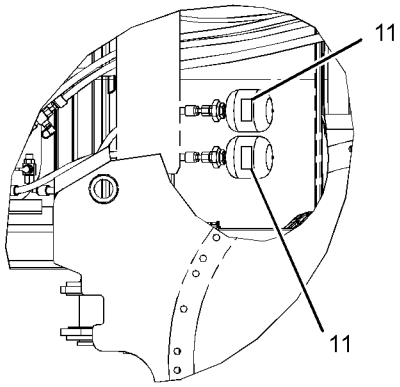

TOP VIEW
(PILOT LINES)

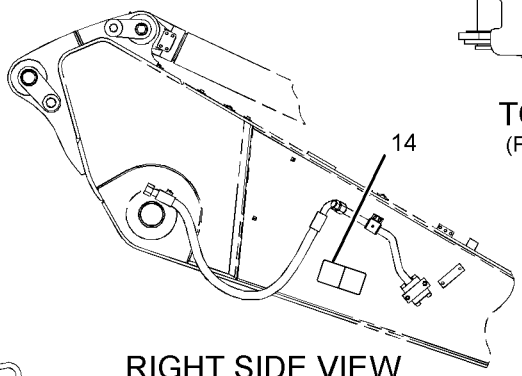

RIGHT SIDE VIEW
(STICK)

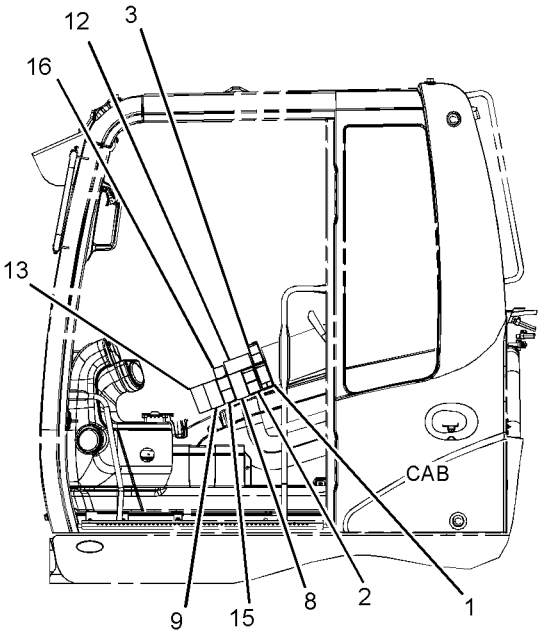

LEFT SIDE VIEW

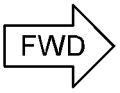

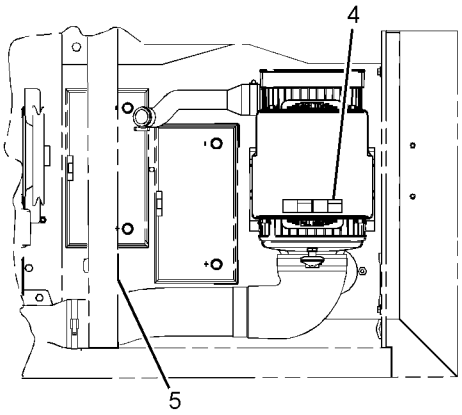

TOP VIEW
(AIR CLEANER)

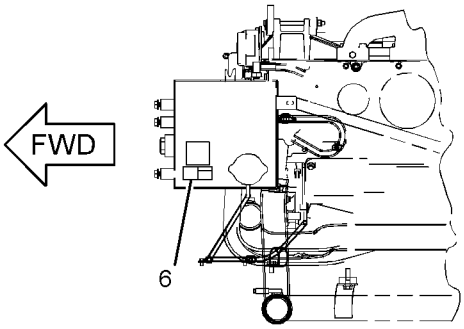

TOP VIEW
(ENGINE)

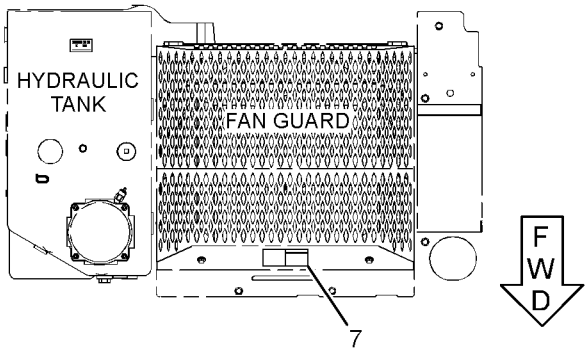

TOP VIEW

GRAPHIC #2 <END> g06132888

253-2262 PLATE & FILM GP—INTERNATIONAL

S/N: CH91-UP

PART OF 453-8185, 473-2841, 517-3262 DISTRIBUTION AR

AN ATTACHMENT

SMCS-7405, 7557 **i05510669**

NOTE	REF NO	GRAPHIC REF	PART NUMBER	QTY	PART NAME 1 2 3 4 5 6 (PRODUCT LEVEL)	SEE PAGE
	1	1	**228-2616**	1	FILM-WARNING (UNIVERSAL, READ OMM)	
	2	1	**227-7391**	1	FILM-WARNING (SEAT BELT, INTERNATIONAL)	
	3	1	**224-9719**	1	FILM-WARNING (ELECTRICAL HAZARD, READ OMM)	
	4	1	**224-8946**	1	FILM-WARNING (NO ETHER SPRAY/AIR INTK, INTL)	
	5	1	**225-0312**	1	FILM-WARNING (JUMP START, READ OMM, INTL)	
	6	1	**225-4257**	1	FILM-WARNING (HOT FLUID UNDER PRESS)	
	7	1	**281-0547**	1	FILM-WARNING (FAN, READ OMM)	
	8	1	**299-6045**	1	FILM-WARNING (CRUSH HAZARD, CAB, READ OMM)	
	9	1	**335-0643**	1	FILM-WARNING (TIPPING HAZARD, READ OMM)	
	10	1	**269-0121**	1	FILM-WARNING (CRUSH HAZARD, READ OMM, INTL)	
	11	1	**372-8053**	1	FILM-WARNING (TIGHTEN WHEEL BOLTS, OMM, INTL)	
	12	1	**228-2781**	2	FILM-WARNING (MACHINE SWING, CRUSHING, INTL)	
	13	1	**276-2334**	3	FILM-WARNING (HIGH PRESS CYLINDER, READ OMM)	
	14	1	**298-4282**	2	FILM-WARNING (CRUSH HAZARD, STAY BACK, INTL)	

253-2262 **PLATE & FILM GP (**contd.**)** **i05510669**

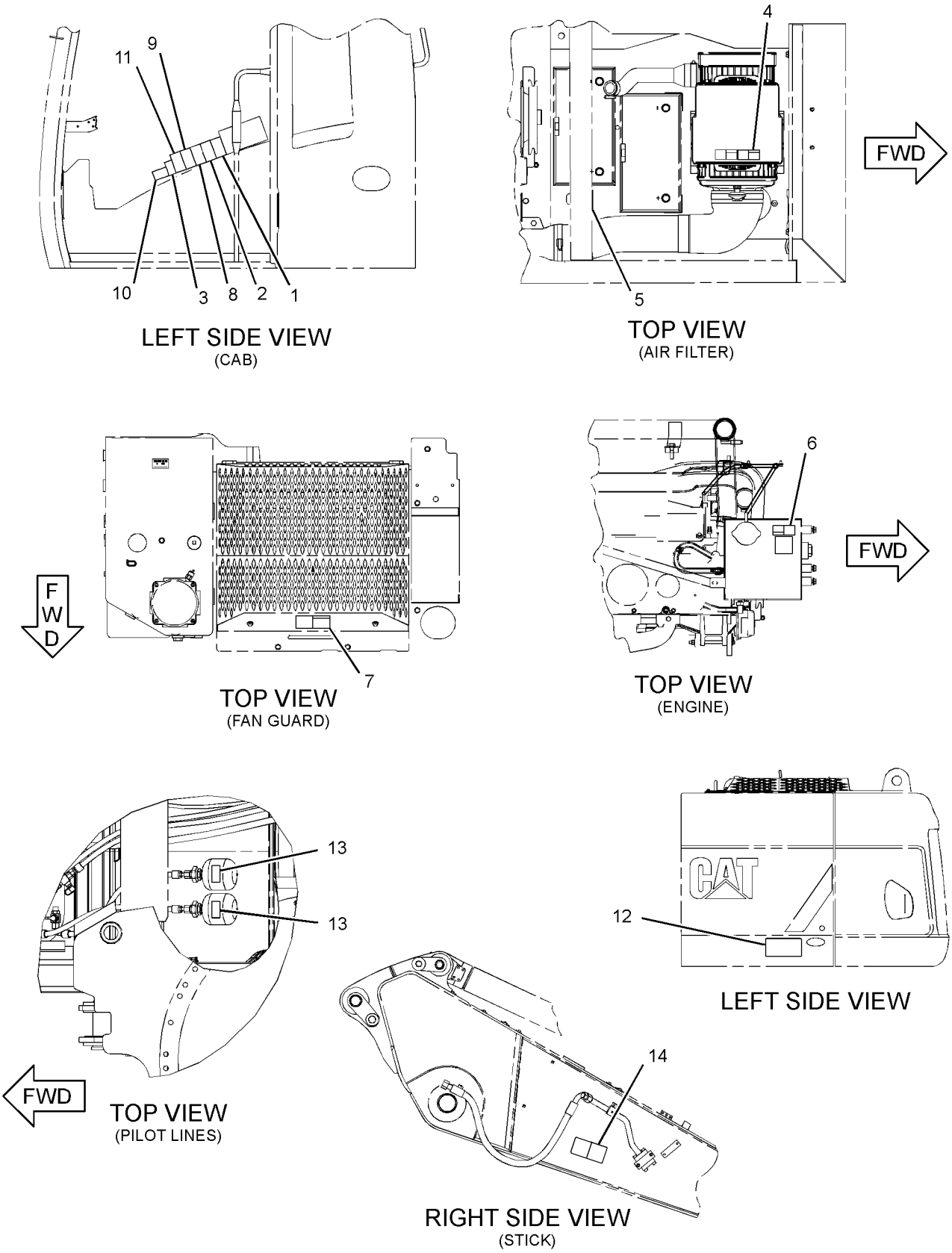

GRAPHIC #1 <END> g03235643

378-8167 PLATE & FILM GP

S/N: E7A1-UP
PART OF 446-6728 ENGINE AR-PRIMARY
ALSO AN ATTACHMENT

SMCS-7405, 7557 **i06731240**

NOTE	REF NO	GRAPHIC REF	PART NUMBER	QTY	PART NAME 1 2 3 4 5 6 (PRODUCT LEVEL)	SEE PAGE
	1	1	**450-9772**	1	PLATE-IDENTIFICATION (CAT)	
	2	1	**326-9053**	1	FILM-WARNING (DO NOT SPRAY, READ OMM)	
	3	1	**346-8219**	2	FILM-WARNING (UNIVERSAL WARNING)	
	4	1	**355-3486**	1	STRIP-ADHESIVE	

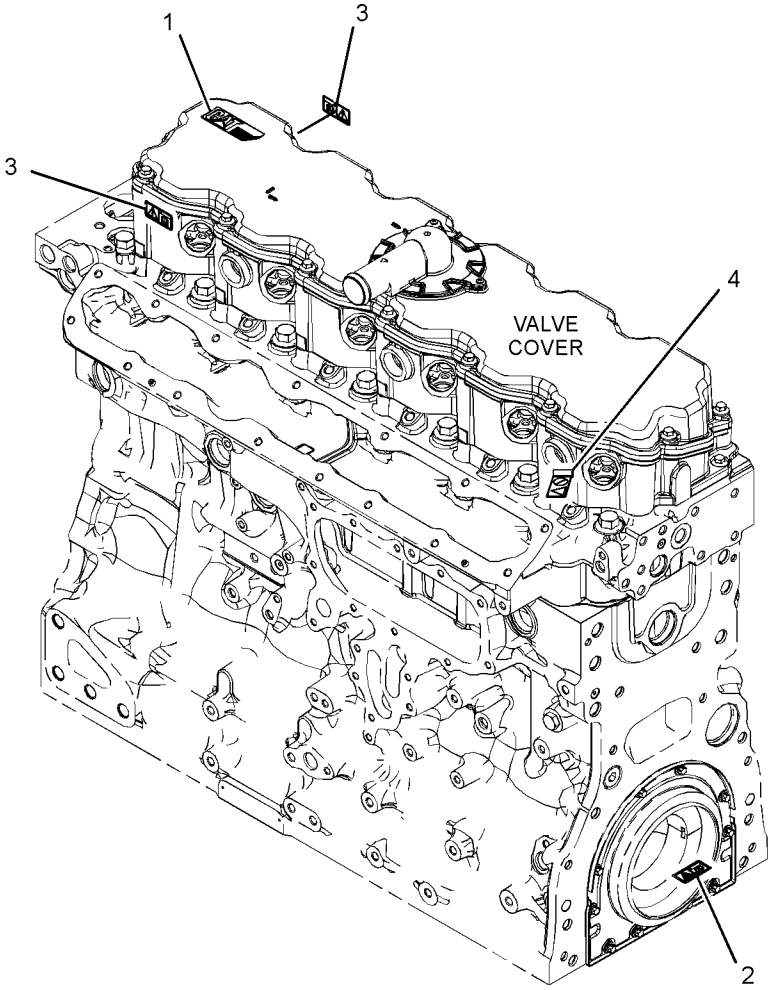

GRAPHIC #1 <END> g03378858

453-7074 PLATE & FILM GP

S/N: CH91-UP
PART OF 449-2824 CHASSIS AR
ALSO AN ATTACHMENT
TYPE 1

SMCS-7405, 7557 **i06125848**

NOTE	REF NO	GRAPHIC REF	PART NUMBER	QTY	PART NAME 1 2 3 4 5 6 (PRODUCT LEVEL)	SEE PAGE
	1	2	**1P-2808**	2	FILM-IDENTIFICATION (LIFT EYE LOCATION)	
	2	1	**5P-8500**	3	KEY	
	3	2	**246-2641**	1	PADLOCK GP	
		2	**5P-8500**	1	KEY	
	4	3	**7X-3229**	2	FILM-IDENTIFICATION (LIFT EYE, TIE-DOWN LOCATION)	
	5	4	**7X-7644**	2	FILM-IDENTIFICATION (TIE-DOWN)	
	6	2	**8T-4999**	1	FILM-INSTRUCTION (BATTERY DISCONNECT)	
	7	2	**8T-6842**	1	FILM-INSTRUCTION (PULL RING, ALTERNATE EXIT)	
	9	1	**117-6549**	1	FILM-INSTRUCTION (SWING LOCK)	
	10	2	**134-7258**	1	FILM-INFORMATION (EXTENDED LIFE COOLANT)	
	11	2	**146-6747**	1	FILM-INFORMATION (24-VOLT)	
	12	2	**167-7270**	1	FILM-INSTRUCTION (NO STEP)	
	13	2	**187-0661**	1	FILM-INSTRUCTION (ALTERNATE EXIT)	
	15	1	**219-0302**	1	FILM-WARNING (NO WELD, NO DRILL, READ OMM)	
	16	2	**224-9029**	1	FILM-INFORMATION (DRY AIR CLEANER)	
	18	1	**239-6986**	1	PLATE-SERIAL NUMBER (MACHINE)	
	19	1	**266-0561**	1	FILM-INSTRUCTION (OPERATOR CONTROLS)	
	20	2	**272-7076**	1	FILM-IDENTIFICATION (PRESSURE TAP)	
	21	1	**296-4125**	1	FILM-IDENTIFICATION (CAT)	
	22	1	**296-4146**	1	FILM-IDENTIFICATION (STRIPE, LH)	
	23	1	**296-4147**	1	FILM-IDENTIFICATION (STRIPE, RH)	
	24	1	**296-4152**	1	FILM-IDENTIFICATION (CATERPILLAR)	
	25	3	**298-4282**	2	FILM-WARNING (CRUSH HAZARD, STAY BACK, INTL)	
	26	2	**304-8923**	1	FILM-INSTRUCTION (ENGINE SHUTOFF)	
	27	1	**318-3028**	1	FILM-IDENTIFICATION (CAT)	
	28	1	**350-2546**	1	FILM-IDENTIFICATION (CAT)	
	30	2	**360-2029**	1	FILM-IDENTIFICATION (RELAY PANEL)	
	31	2	**360-2030**	1	FILM-IDENTIFICATION (FUSE, RELAY PANEL)	
	32	2	**366-3051**	1	FILM-IDENTIFICATION (FUSE PANEL)	
	33	2	**367-0844**	1	FILM-INSTRUCTION (FUEL, READ OMM)	
	35	1	**455-4365**	2	FILM-IDENTIFICATION (M310D2)	
F			**129-3830**	50	CAP-GREASE	
BF			**3S-2093**	34	STRAP-CABLE	
BF			**7K-1181**	60	STRAP-CABLE	
F			**115-8645**	5	GUARD	
F			**266-0982**	2	GUARD	
F			**275-4910**	1	STRAP	
F			**340-3200**	2	GUARD	

B - USE AS REQUIRED
F - NOT SHOWN

453-7074 **PLATE & FILM GP** (contd.) **i06125848**

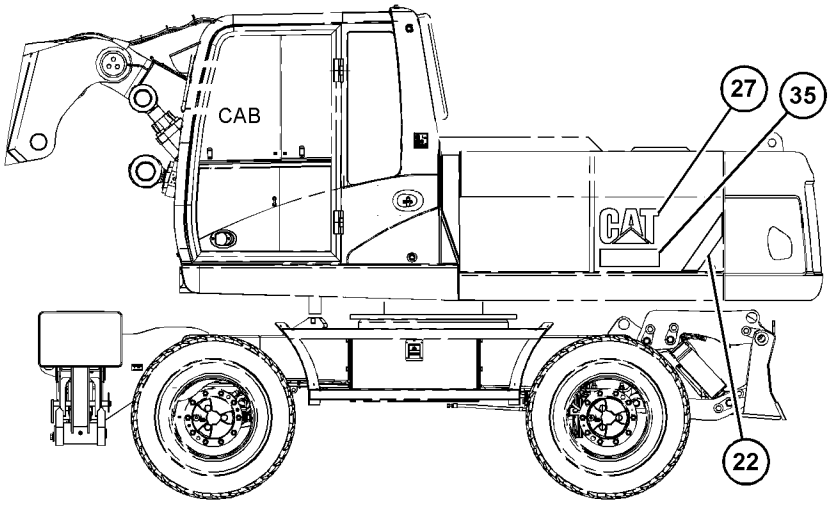

LEFT SIDE VIEW

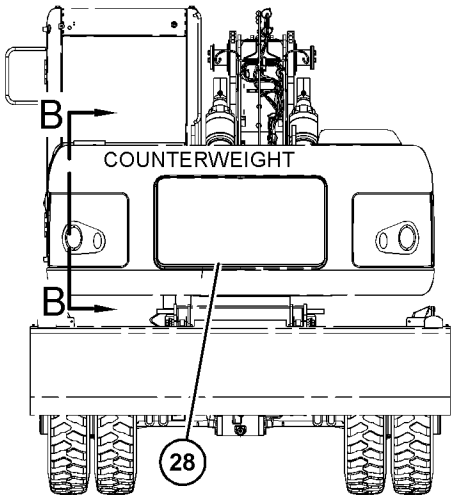

REAR VIEW

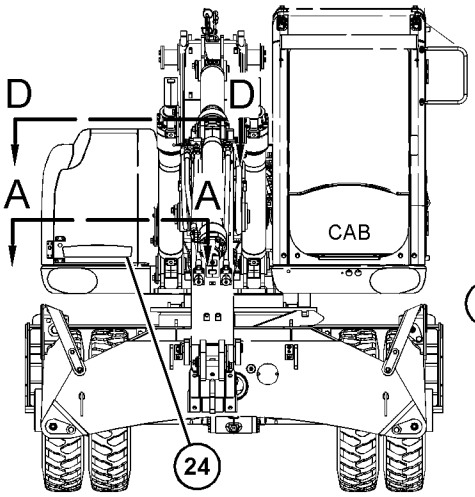

FRONT VIEW

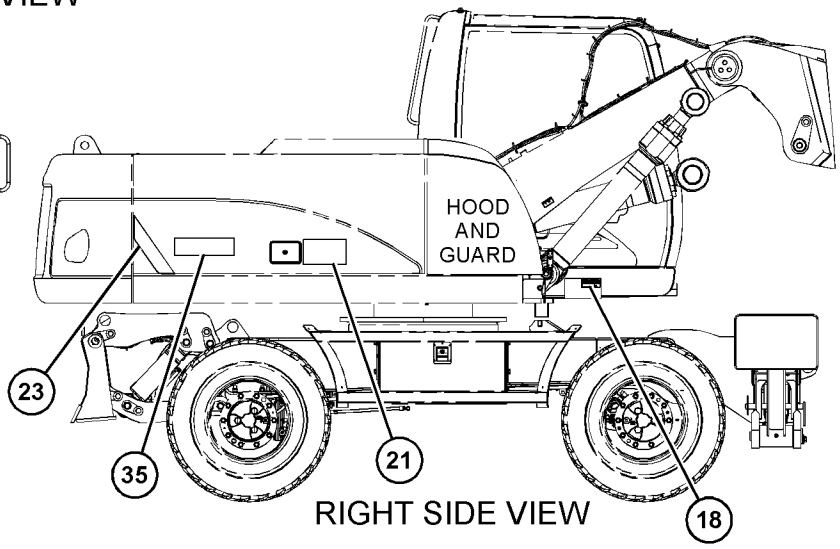

RIGHT SIDE VIEW

REFER TO ALL ILLUSTRATIONS OF
THIS GROUP FOR AUXILIARY VIEWS

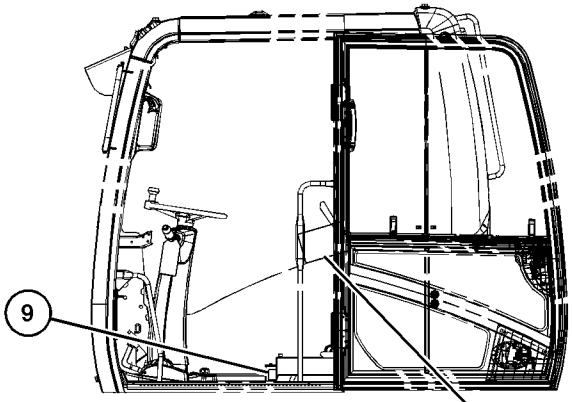

LEFT SIDE VIEW
(CAB)

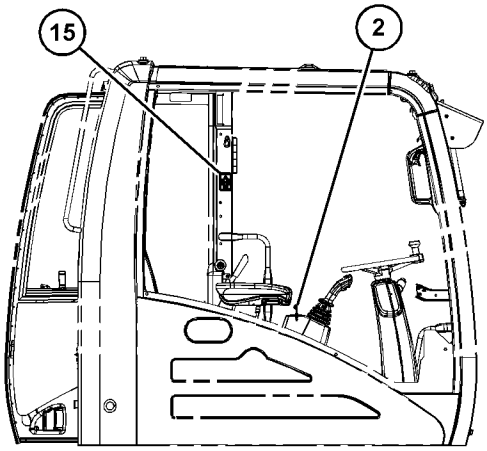

RIGHT SIDE VIEW
(CAB)

GRAPHIC #1 g03883479

453-7074 **PLATE & FILM GP** (contd.) **i06125848**

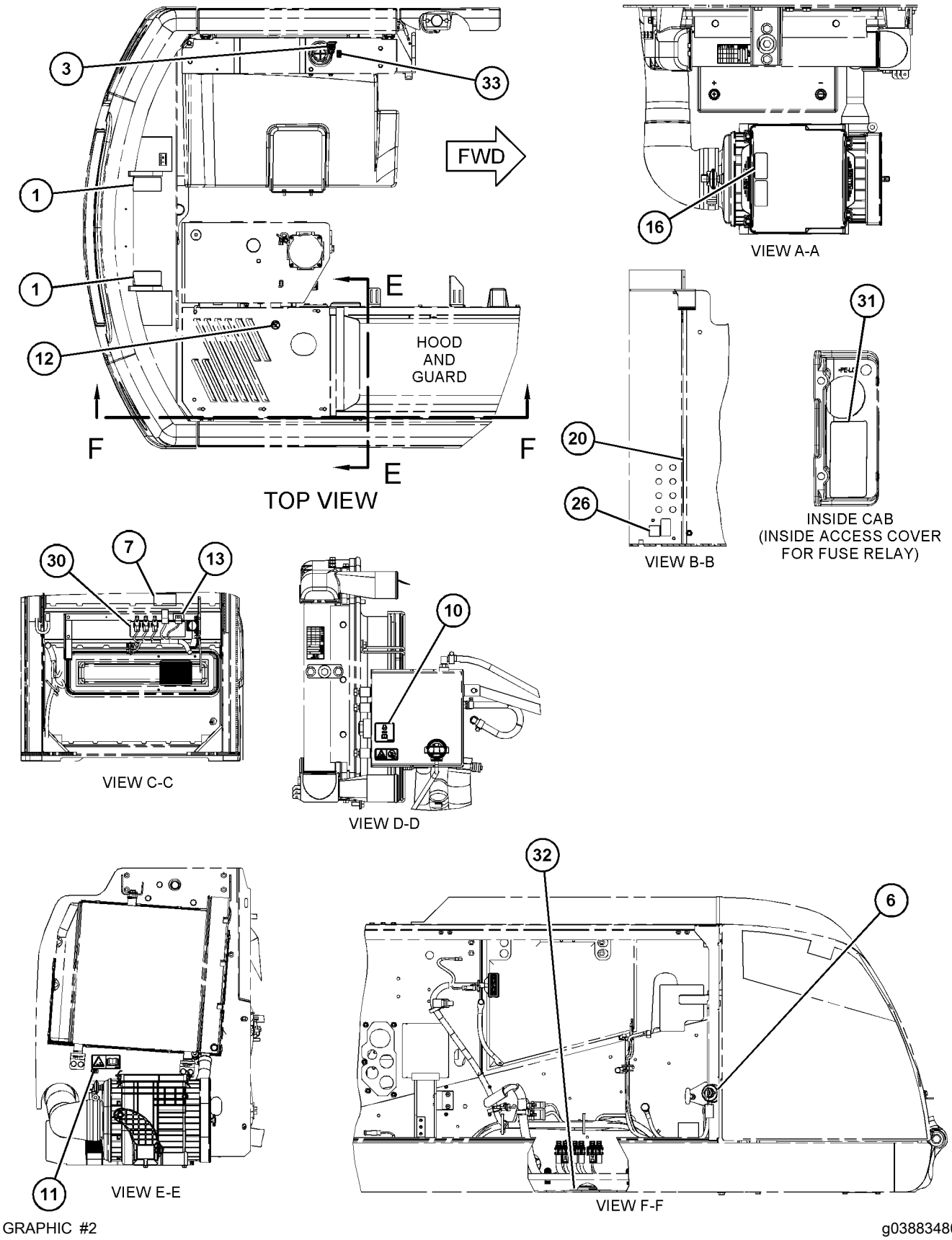

GRAPHIC #2 g03883480

453-7074 **PLATE & FILM GP (**contd.**)** **i06125848**

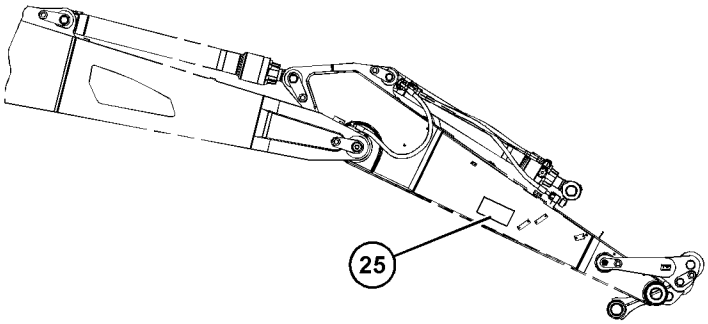

RIGHT SIDE VIEW
(STICK)

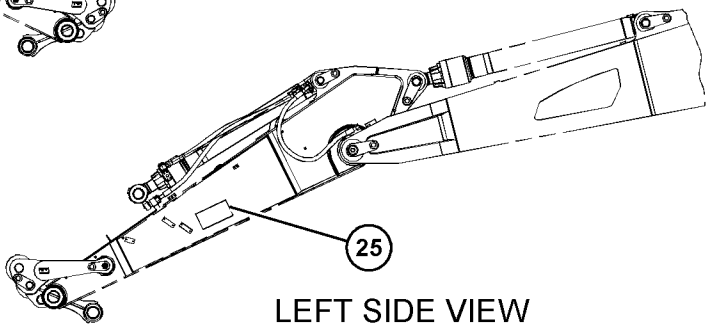

LEFT SIDE VIEW
(STICK)

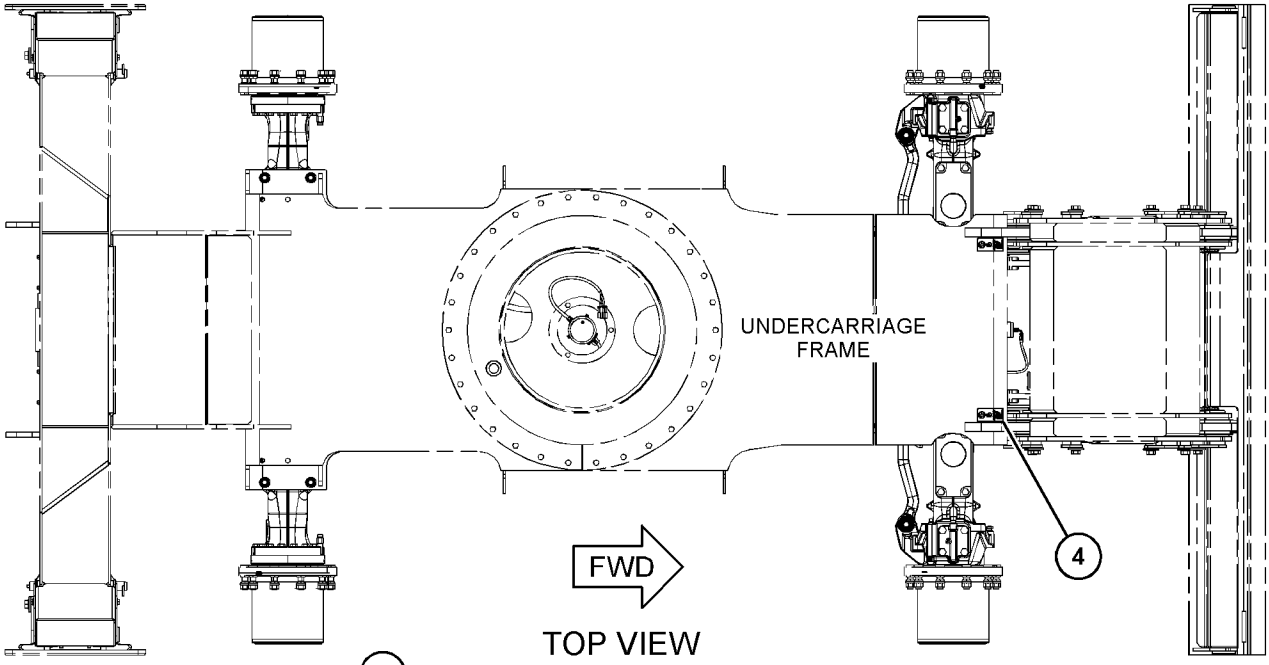

TOP VIEW
(STABILIZER REAR) (BLADE FRONT)

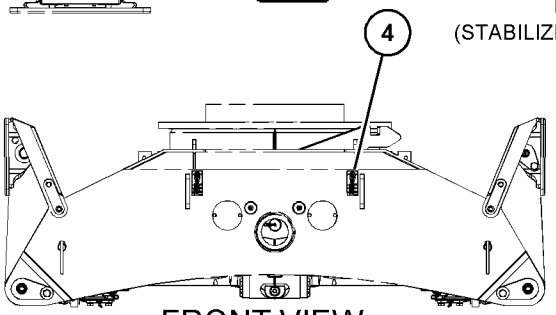

FRONT VIEW
(UNDERCARRIAGE FRAME) (NO ATTACHMENT)

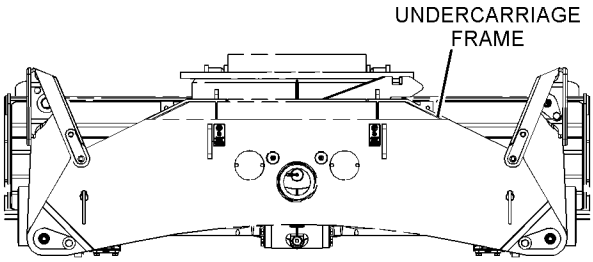

FRONT VIEW
(BLADE REAR) (STABILIZER FRONT)

GRAPHIC #3 g03745214

453-7074 **PLATE & FILM GP (**contd.**)** **i06125848**

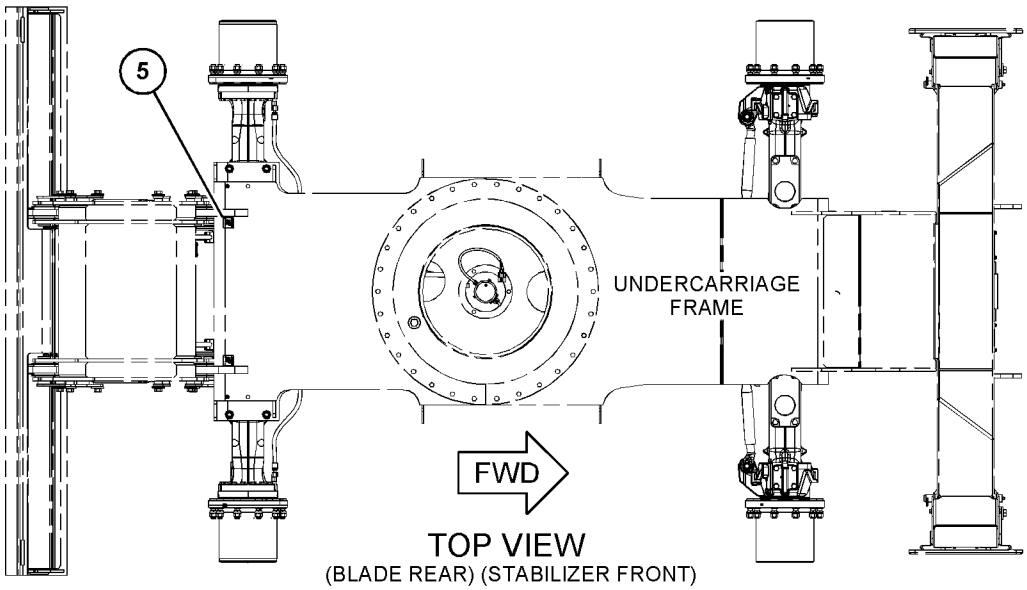

TOP VIEW
(BLADE REAR) (STABILIZER FRONT)

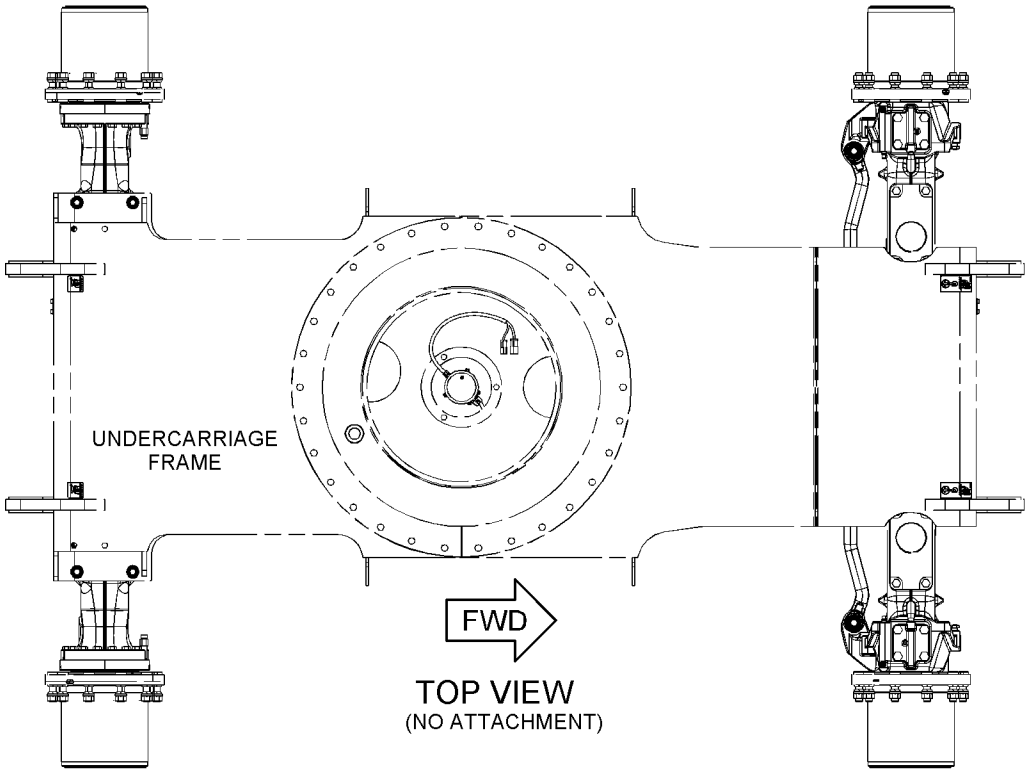

TOP VIEW
(NO ATTACHMENT)

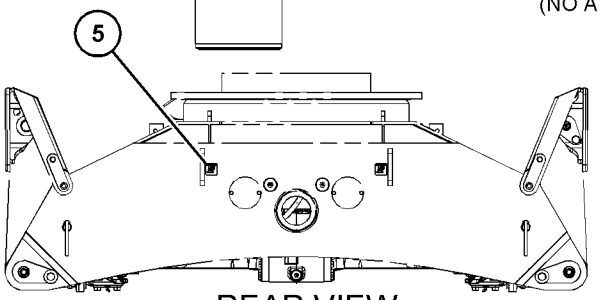

REAR VIEW
(UNDERCARRIAGE FRAME) (NO ATTACHMENT)

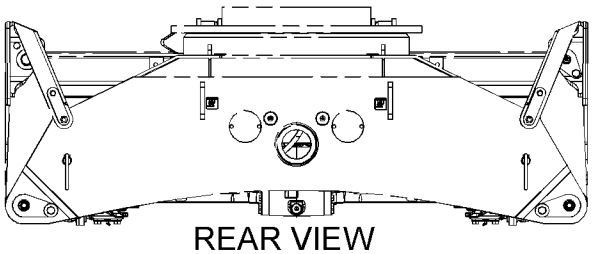

REAR VIEW
(STABILIZER REAR) (BLADE FRONT)

GRAPHIC #4 <END> g03745215

453-7074 PLATE & FILM GP

S/N: CH91-UP
PART OF 449-2824 CHASSIS AR
ALSO AN ATTACHMENT
TYPE 2

SMCS-7405, 7557 **i06907146**

NOTE	REF NO	GRAPHIC REF	PART NUMBER	QTY	PART NAME 1 2 3 4 5 6 (PRODUCT LEVEL)	SEE PAGE
	1	2	**1P-2808**	2	FILM-IDENTIFICATION (LIFT EYE LOCATION)	
	2	1	**5P-8500**	3	KEY	
	3	2	**246-2641**	1	PADLOCK GP	
		2	**5P-8500**	1	KEY	
	4	3	**7X-3229**	2	FILM-IDENTIFICATION (LIFT EYE, TIE-DOWN LOCATION)	
	5	4	**7X-7644**	2	FILM-IDENTIFICATION (TIE-DOWN)	
	6	2	**8T-4999**	1	FILM-INSTRUCTION (BATTERY DISCONNECT)	
	7	2	**8T-6842**	1	FILM-INSTRUCTION (PULL RING, ALTERNATE EXIT)	
	9	1	**117-6549**	1	FILM-INSTRUCTION (SWING LOCK)	
	10	2	**134-7258**	1	FILM-INFORMATION (EXTENDED LIFE COOLANT)	
	11	2	**146-6747**	2	FILM-INFORMATION (24-VOLT)	
	12	2	**167-7270**	1	FILM-INSTRUCTION (NO STEP)	
	13	2	**187-0661**	1	FILM-INSTRUCTION (ALTERNATE EXIT)	
	15	1	**219-0302**	1	FILM-WARNING (NO WELD, NO DRILL, READ OMM)	
	16	2	**224-9029**	1	FILM-INFORMATION (DRY AIR CLEANER)	
	18	1	**239-6986**	1	PLATE-SERIAL NUMBER (MACHINE)	
	20	2	**272-7076**	1	FILM-IDENTIFICATION (PRESSURE TAP)	
	21	1	**296-4125**	1	FILM-IDENTIFICATION (CAT)	
	22	1	**296-4146**	1	FILM-IDENTIFICATION (STRIPE, LH)	
	23	1	**296-4147**	1	FILM-IDENTIFICATION (STRIPE, RH)	
	24	1	**296-4152**	1	FILM-IDENTIFICATION (CATERPILLAR)	
	25	3	**298-4282**	2	FILM-WARNING (CRUSH HAZARD, STAY BACK, INTL)	
	26	2	**304-8923**	1	FILM-INSTRUCTION (ENGINE SHUTOFF)	
	27	1	**318-3028**	1	FILM-IDENTIFICATION (CAT)	
	28	1	**350-2546**	1	FILM-IDENTIFICATION (CAT)	
	30	2	**360-2029**	1	FILM-IDENTIFICATION (RELAY PANEL)	
	31	2	**360-2030**	1	FILM-IDENTIFICATION (FUSE, RELAY PANEL)	
	32	2	**366-3051**	1	FILM-IDENTIFICATION (FUSE PANEL)	
	33	2	**367-0844**	1	FILM-INSTRUCTION (FUEL, READ OMM)	
	35	1	**455-4365**	2	FILM-IDENTIFICATION (M310D2)	
CF		1	**129-3830**	32	CAP-GREASE	
BF		1	**3S-2093**	34	STRAP-CABLE	
BF		1	**7K-1181**	60	STRAP-CABLE	
F		1	**115-8645**	5	GUARD	
F		1	**266-0982**	2	GUARD	
F		1	**275-4910**	1	STRAP	
F		1	**340-3200**	2	GUARD	

B - USE AS REQUIRED
C - CHANGE FROM PREVIOUS TYPE
F - NOT SHOWN

453-7074 **PLATE & FILM GP** (contd.) **i06907146**

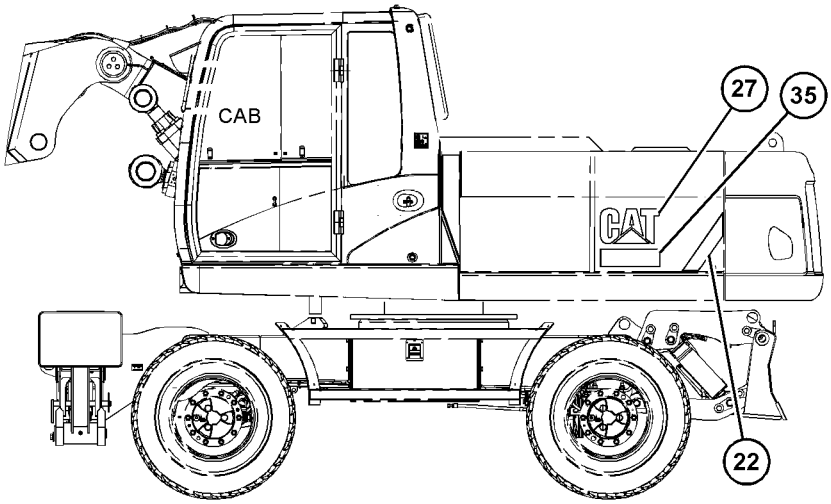

LEFT SIDE VIEW

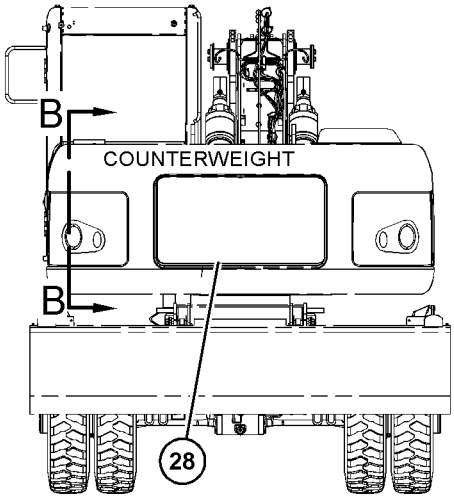

REAR VIEW

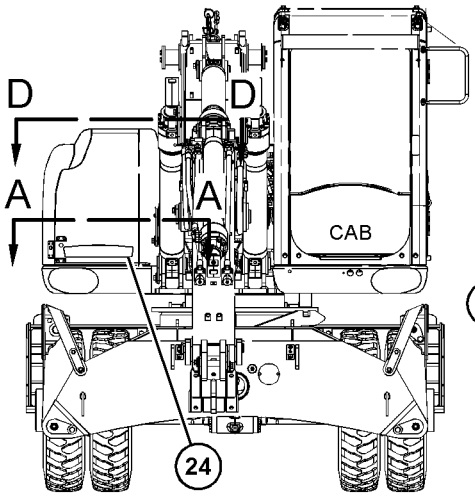

FRONT VIEW

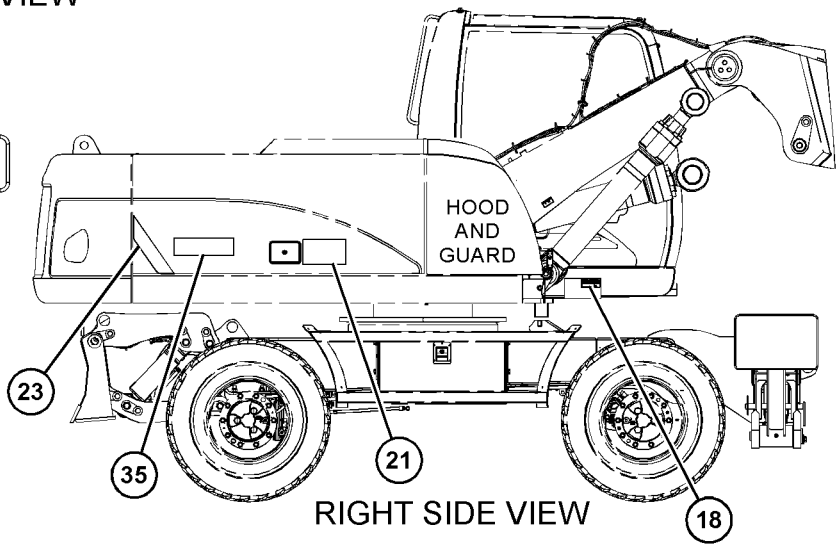

RIGHT SIDE VIEW

REFER TO ALL ILLUSTRATIONS OF
THIS GROUP FOR AUXILIARY VIEWS

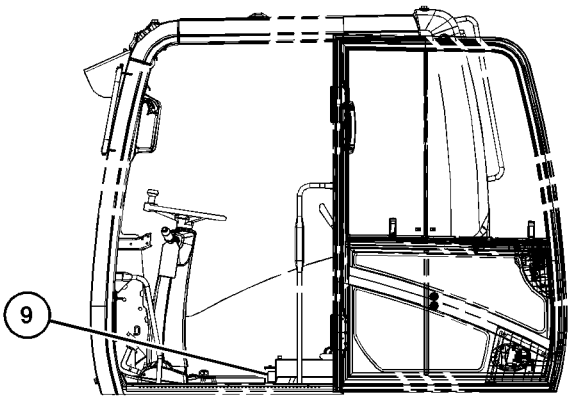

LEFT SIDE VIEW
(CAB)

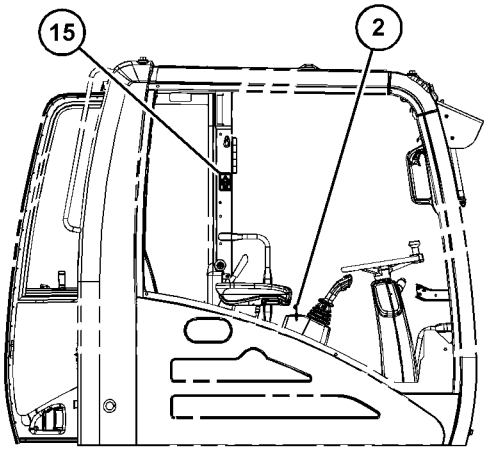

RIGHT SIDE VIEW
(CAB)

GRAPHIC #1 g06153431

453-7074 **PLATE & FILM GP** (contd.) **i06907146**

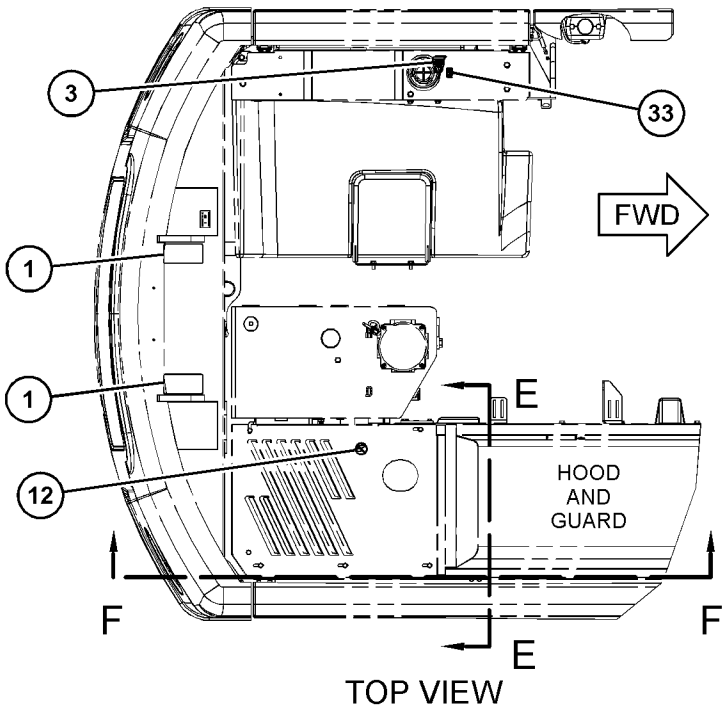

TOP VIEW

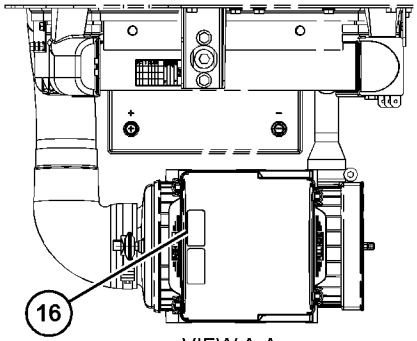

VIEW A-A

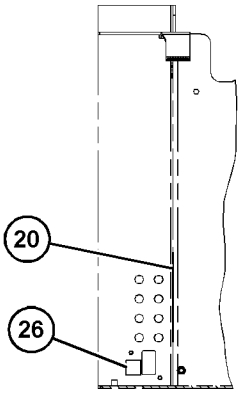

VIEW B-B

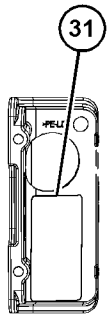

INSIDE CAB
(INSIDE ACCESS COVER
FOR FUSE RELAY)

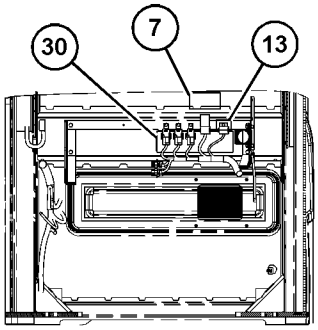

VIEW C-C

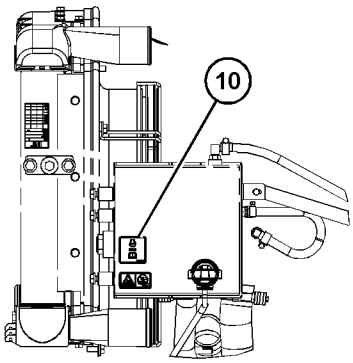

VIEW D-D

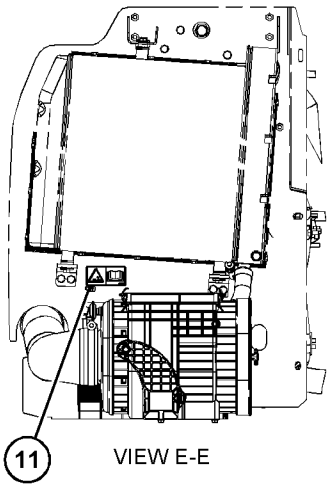

VIEW E-E

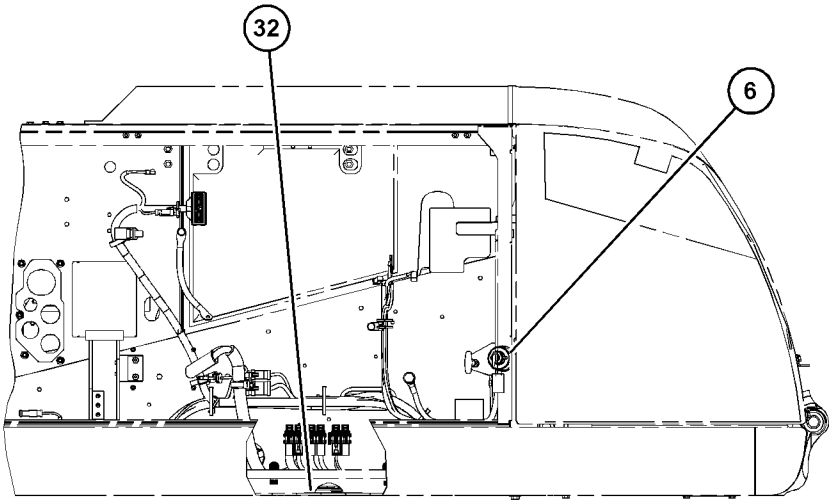

VIEW F-F

GRAPHIC #2 g03883480

453-7074 **PLATE & FILM GP (**contd.**)** **i06907146**

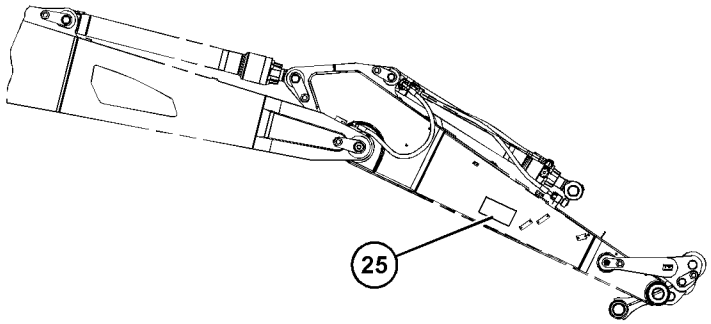

RIGHT SIDE VIEW
(STICK)

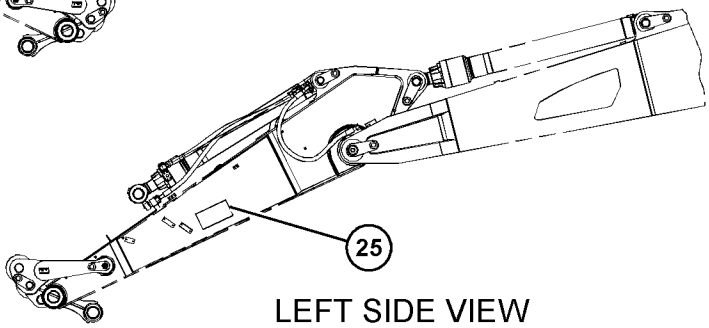

LEFT SIDE VIEW
(STICK)

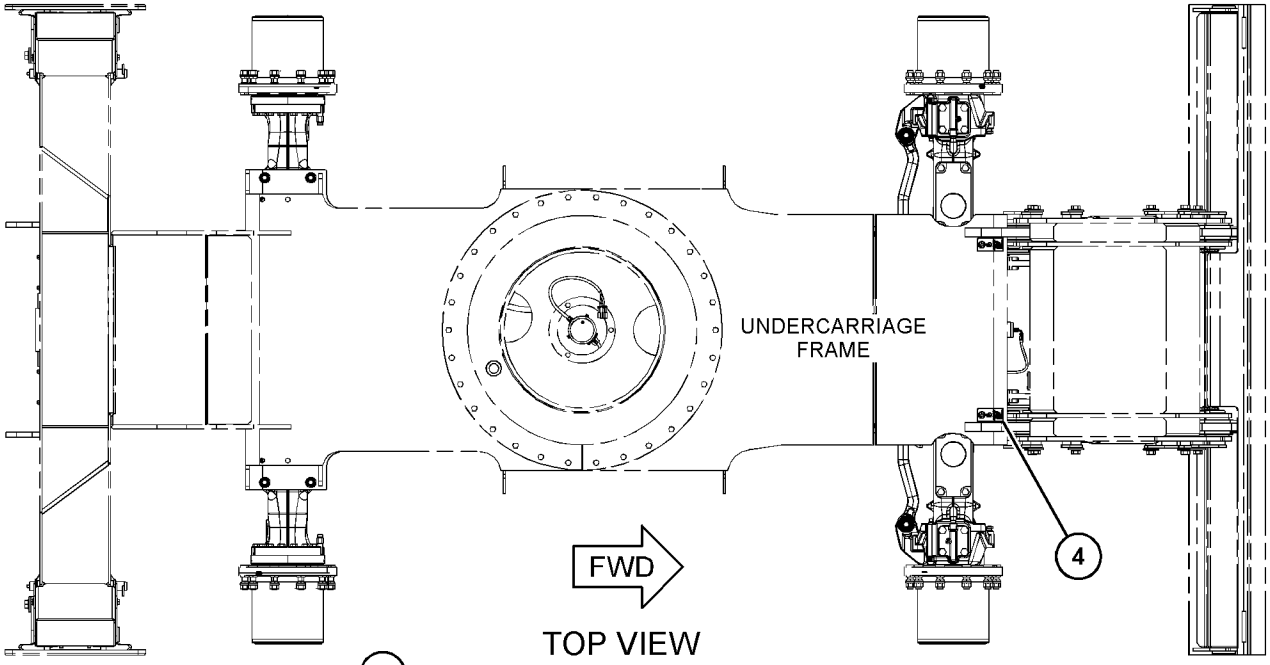

TOP VIEW
(STABILIZER REAR) (BLADE FRONT)

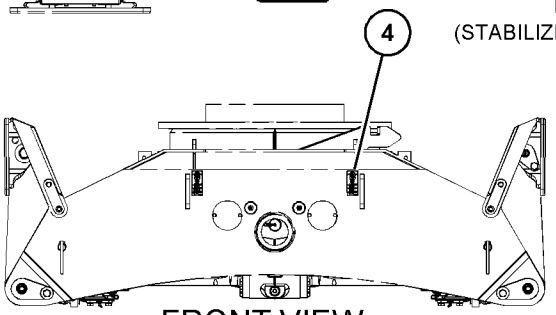

FRONT VIEW
(UNDERCARRIAGE FRAME) (NO ATTACHMENT)

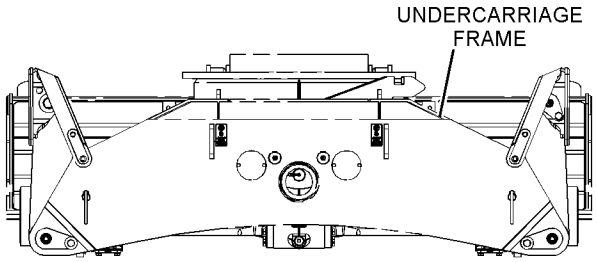

FRONT VIEW
(BLADE REAR) (STABILIZER FRONT)

GRAPHIC #3 g03745214

453-7074 **PLATE & FILM GP** (contd.) **i06907146**

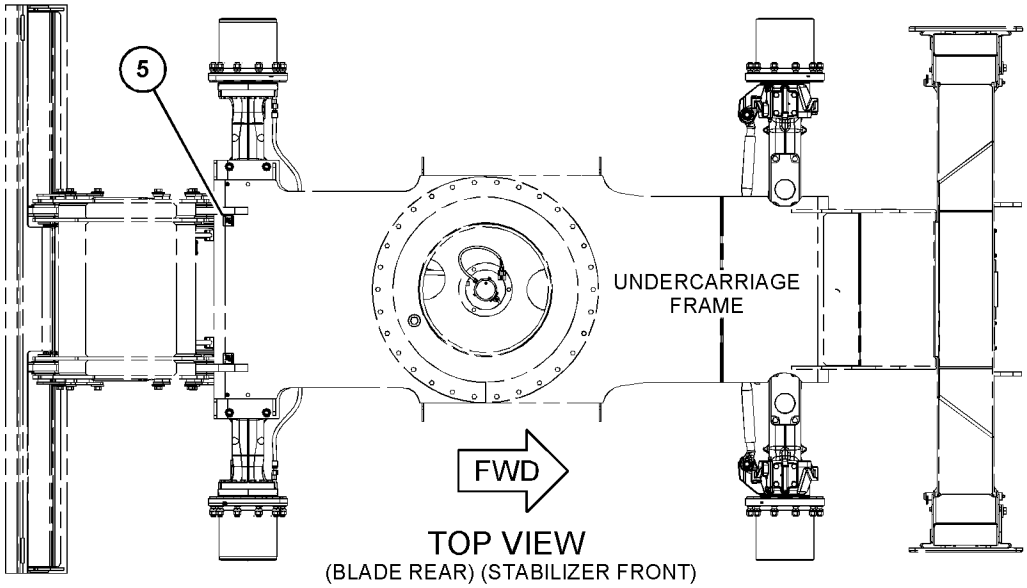

TOP VIEW
(BLADE REAR) (STABILIZER FRONT)

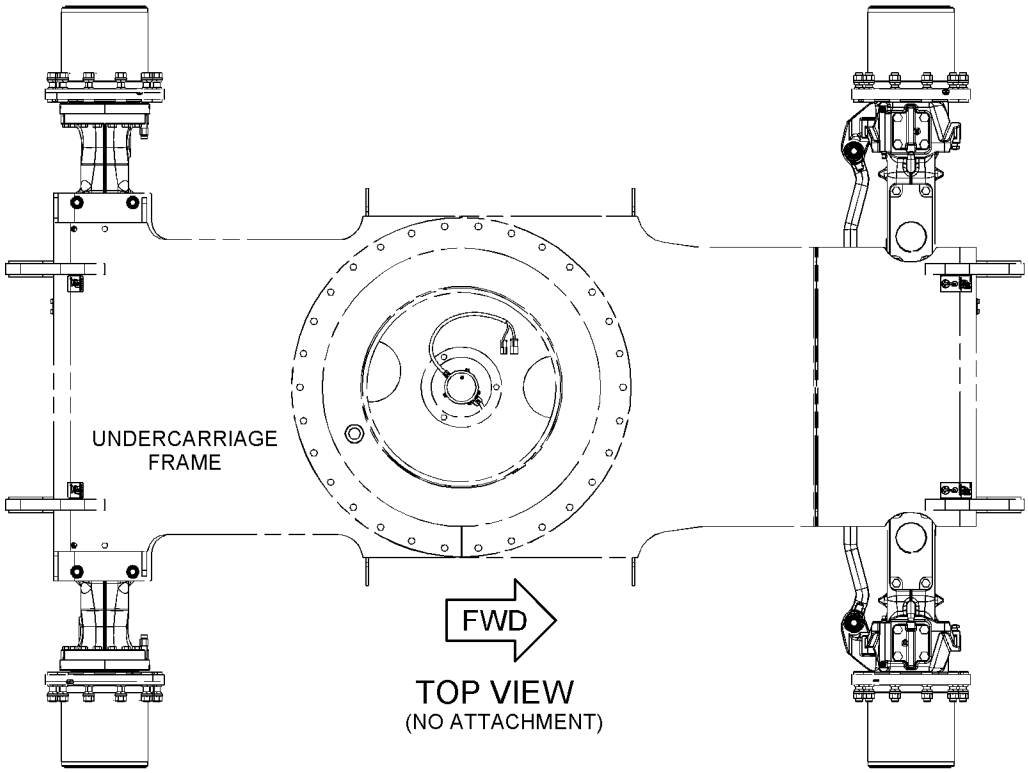

TOP VIEW
(NO ATTACHMENT)

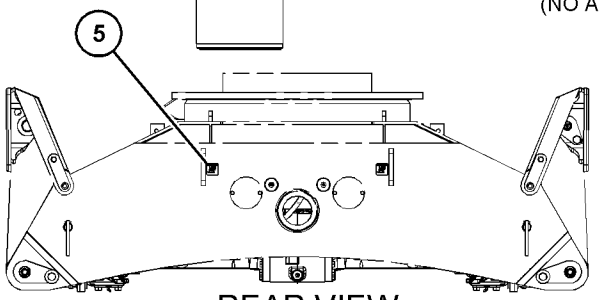

REAR VIEW
(UNDERCARRIAGE FRAME) (NO ATTACHMENT)

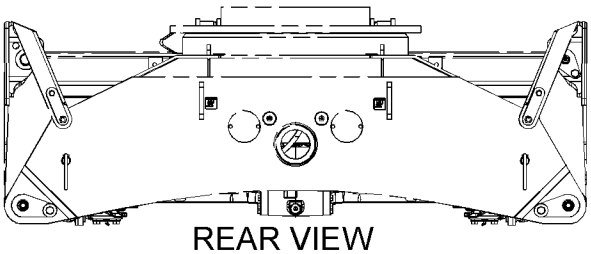

REAR VIEW
(STABILIZER REAR) (BLADE FRONT)

GRAPHIC #4 <END> g03745215

475-2030 PLATE & FILM GP

S/N: CH91-UP
PART OF 473-2841 DISTRIBUTION AR
AN ATTACHMENT

SMCS-7405, 7557 **i06064137**

NOTE	REF NO	GRAPHIC REF	PART NUMBER	QTY	PART NAME 1 2 3 4 5 6 (PRODUCT LEVEL)	SEE PAGE
	1	1	**437-2594**	1	PLATE-SERIAL NUMBER (ENGINE)	

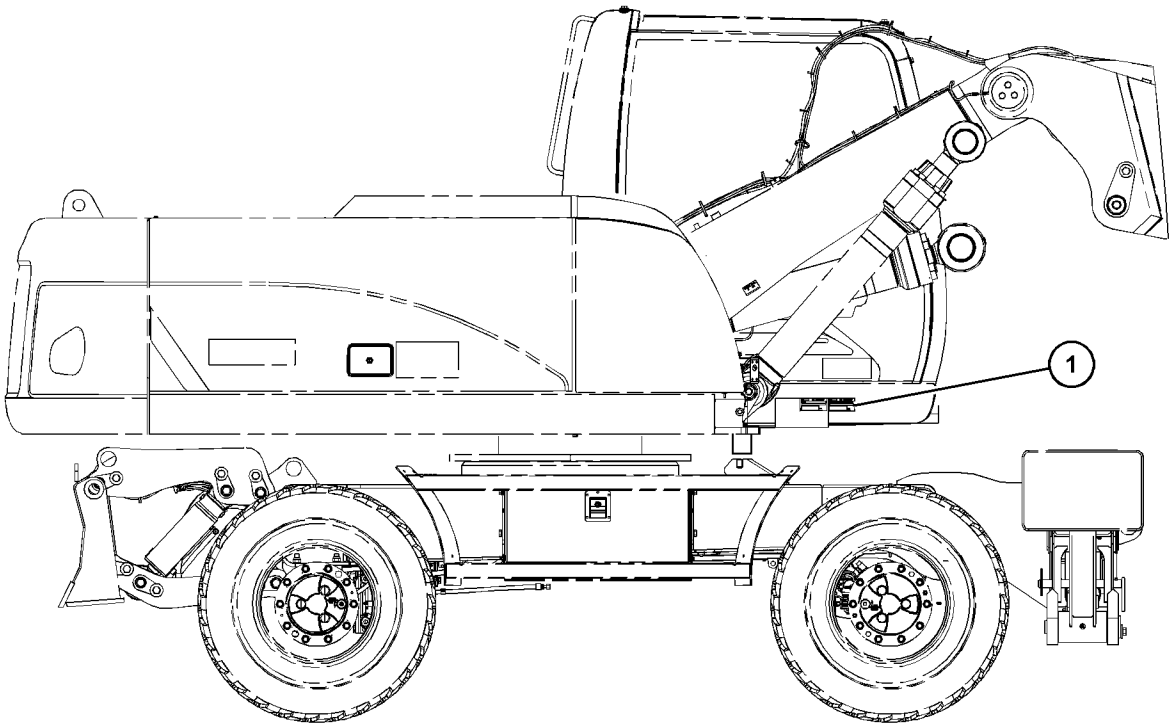

RIGHT SIDE VIEW

GRAPHIC #1 <END> g03823888

231-0146 TOOL GP

S/N: CH91-UP

AN ATTACHMENT

SMCS-0600 **i05520516**

NOTE	PART NUMBER	QTY	PART NAME 1 2 3 4 5 6 (PRODUCT LEVEL)	SEE PAGE
			(INCLUDES RATCHET & 3/4-IN. DRIVE 30-MM SOCKET)	
			<END>	

PART NUMBER INDEX

Part	Page
0	
0S-1603	26
1	
1G-3176	599
1G-3410	335
1H-1023	719
	720
	723
1H-3244	760
1H-3338	187
	188
1M-4543	492
	496
1M-6119	108
1M-6120	108
1P-0810	130
	131
	132
	135
	136
	137
	140
	141
	144
	146
	150
	152
	207
	210
1P-2808	919
	924
1P-3702	440
	503
	507
	511
	549
	550
	555
	557
	571
	573
	574
	576
	578
	580
	640
1P-3703	414
	416
	440
	476
	482
	503
	507
	511
	526
	535
	633
1P-3704	482
	526
1P-4578	492
	496
	529
	532
	623
	630
1P-4579	529
	532
1P-6356	808
	810
1R-5318	674
1R-5998	889
1S-7251	140
1S-7252	108
	140
1U-3302	765
1U-8846	294
	592
2	
2C-9259	761
	762
	763
	764
	770
	771
	772
2D-0388	64
2D-6392	691
2D-6398	776
2H-3922	185
2H-3934	375
2J-2668	529
	532
2L-8049	140
2L-8050	140
	141
	184
2L-8051	132
	136
	140
	141
2L-8052	136
2L-8057	140
2L-8058	140
	141
	184
2L-8060	136
2L-8067	128
	135
	140
	141
2L-8068	128
	130
	132
	135
	136
	145
	146
	210
2L-8069	141
2L-8075	130
	132
2L-8076	141
2L-8077	128
	138
2L-8078	121
	128
	135
2M-7819	840
2M-9780	61
	97
	100
	103
	381
	383
	478
	488
	491
	495
	510
	517
	522
	528
	531
	535
	615
	617
	628
	652
	674
	721
2P-1279	463
	776
2P-4173	22
2S-4078	478
	488
	526
2W-9710	64
	67
2Y-5881	609
3	
3B-4505	611
3B-4509	584
3D-2824	66
	440
	443
	446
	450
	453
	455
	458
	460
	482
	500
	502
	503
	506
	507
	510
	511
	528
	529
	531
	535
	588
	589
	590
	597
	615
	635
	649
	677
3D-7943	656
	672
3E-3371	191
	823
3E-3383	821
	823
3E-4297	701
3E-4298	443
	446
	449
	452
	455
	457
	460
	500
3E-4299	609
3E-4321	859
3E-4333	584
3E-4988	163
	165
3E-5169	190
3E-6749	658
3E-6766	698
3E-6788	658
	661
	663
	676
3E-8007	654
3E-8020	864
	889
	896
3E-8025	691
3F-9556	109
	197
	199
	204
	219
3H-0120	776
3J-0634	586
3J-1907	61
	64
	338
	361
	399
	443
	446
	449
	452
	455
	457
	460
	466
	468
	470
	472
	478
	479
	482
	485
	488
	492
	496
	498
	500
	502
	503
	506
	507
	510
	511
	513
	515
	517
	518
	520
	523
	525
	526
	527
	528
	529
	531
	532
	535
	537
	540
	541
	544
	587
	597
	623
	626

► PRIMARY REFERENCE

PART NUMBER INDEX

Part	Page
	630
	633
	635
	638
	640
	642
	644
	646
	648
	649
	674
	677
	680
	686
	687
	691
	776
3J-7354	61
	354
	361
	526
	547
	596
	687
	776
3K-0360	21
	22
	324
	328
	354
	381
	383
	440
	466
	468
	470
	472
	478
	482
	485
	488
	491
	492
	495
	496
	513
	517
	518
	528
	529
	531
	532
	537
	540
	544
	547
	578
	580
	649
	652
	674
	686
	687
	712
	713
3P-1155	659
	663
3S-1223	387
3S-2093	61
	84
	105
	108
	112
	116
	130
	135
	138
	139
	141
	148
	150
	152
	154
	156
	169
	175
	192
	195
	197
	199
	201
	202
	204
	206
	207
	209
	210
	215
	216
	217
	219
	225
	305
	338
	503
	507
	511
	615
	617
	633
	687
	798
	819
	857
	888
	919
	924
3S-6050	108
3S-8665	84
3T-0851	906
3T-0852	159
	848
	908
3T-6376	263
3V-2431	507

4

Part	Page
4B-4278	889
4B-4863	848
4D-1322	776
4D-7794	776
4D-8648	237
4E-0041	66
4F-2294	189
4F-4974	74
4I-0420	900
4I-0575	728
4I-0576	728
4I-0577	728
4I-1205	889
4I-1206	889
4I-3063	889
4I-3090	889
4I-4270	889
4I-4286	867
4I-4392	889
4I-6766	227
4I-7690	691
4I-9521	515
	517
	523
	547
4I-9522	515
	517
	520
	523
	547
4I-9523	513
	515
	517
	523
	547
4I-9524	513
	515
	520
	523
4I-9525	513
	515
	520
	523
	547
4I-9526	515
4I-9527	513
	515
	523
	547
4I-9528	513
	515
	518
	523
4J-0520	341
	474
	475
	476
	492
	496
	526
	567
	569
	623
	630
	642
	644
	646
	656
4J-0522	492
	496
	529
	532
	567
	569
	623
	630
	683
4J-0524	529
	532
	623
	630
4J-0526	386
4J-2677	601
4J-5267	352
	424
	426
	428
	430
	432
	434
	436
	438
	440
	443
	446
	449
	450
	452
	453
	455
	457
	458
	460
	476
	482
	499
	500
	502
	503
	506
	507
	511
	549
	550
	555
	557
	571
	573
	574
	576
	635
	638
	640
	672
	674
	712
	713
4J-5309	338
4J-5351	354
	362
	364
	370
4J-5477	462
	463
	776
4M-6921	294
	547
4P-7428	204
4P-7429	888
4P-7581	59
	201
4P-8134	59
	109
	195
	592
4Y-1636	150
	152
	154

5

Part	Page
5B-0935	776
5C-2874	279
	822
	855
5C-2890	97
	100
	109
	150
	152
	154
	156
	184
	187

PART NUMBER INDEX

Part	Page
	188
	192
	197
	279
	281
	515
	787
	813
	822
	848
	888
	906
5C-5306	871
5C-7261	70
	105
	109
	160
	161
	162
	172
	197
	199
	204
	219
	251
	252
	276
	279
	282
	285
	287
	309
	311
	314
	315
	317
	338
	381
	383
	633
	822
	850
	852
	861
	863
	908
5C-7793	889
5C-7883	830
5C-8312	848
	855
5C-9553	61
	109
	112
	116
	148
	190
	202
	219
	782
	798
	816
5C-9583	167
5E-6955	397
5F-3106	375
5K-1094	485
5K-5221	656
5K-9090	352
	414
	416
	424
	426
	428
	430
	432
	434
	436
	438
	440
	443
	446
	450
	453
	455
	458
	460
	474
	475
	476
	478
	488
	489
	491
	492
	495
	496
	500
	503
	507
	511
	526
	549
	550
	555
	557
	567
	569
	571
	573
	574
	576
	623
	631
	644
	723
5P-0767	859
5P-1046	61
5P-1075	900
5P-1076	282
	285
	308
	309
5P-1480	654
5P-3454	136
	140
5P-3455	136
	140
	141
5P-3456	676
	694
5P-4116	55
	59
	84
	105
	109
	197
	199
	201
	204
	219
	276
	278
	279
	282
	285
	287
	288
	291
	308
	309
	311
	314
	315
	317
	649
	863
5P-4924	61
	64
5P-4961	61
5P-5623	105
5P-5874	688
5P-5926	173
5P-5927	875
5P-6006	121
	128
	130
	132
	145
5P-6264	109
5P-6271	130
	132
5P-7177	60
5P-7466	424
	426
	428
	430
	432
	434
	436
	438
	443
	446
	450
	453
	456
	458
	460
	500
5P-7467	424
	426
	428
	430
	432
	434
	436
	438
	443
	446
	450
	453
	456
	458
	460
	500
5P-7468	416
	424
	426
	428
	430
	432
	434
	436
	438
	444
	446
	450
	453
	456
	458
	460
	500
5P-7469	416
	424
	426
	428
	430
	432
	434
	436
	438
	444
	446
	450
	453
	456
	458
	460
	500
5P-7530	658
	663
5P-7958	860
5P-7970	611
	701
	826
5P-8112	424
	426
	428
	430
	432
	434
	436
	438
	444
	446
	450
	453
	456
	458
	460
	500
5P-8356	676
	694
5P-8444	416
	424
	426
	428
	430
	432
	434
	436
	438
	444
	446
	450
	453
	456
	458
	461
	500
5P-8500	103
	919
	924
5P-9186	22
5P-9436	776
5P-9617	687
5V-9155	337
5W-0116	244
5W-0118	244
5W-0119	244
5W-0122	244
5W-0965	226
	227
5W-1112	319
	321
5W-1119	175
	299
	305

► PRIMARY REFERENCE

PART NUMBER INDEX

Part	Page
5W-1250	397
5W-1259	871
5W-1274	370
5W-1318	871
5W-1341	841
5W-1418	244
5W-1419	244
5W-1420	244
5W-1422	244
5W-1437	689
5W-1693	244
	263
5W-1696	338
	615
	617
5W-1701	735
	738
	782
5W-1987	130
	133
	137
	207
5W-2072	234
	265
5W-2073	234
	265
5W-2074	234
	265
5W-2173	237
5W-2234	254
	259
	260
5W-2750	244
5W-2795	266
5W-2817	303
	348
	349
	351
	352
	734
	735
	738
	741
	745
	749
	751
	781
	782
5W-2888	819
5W-2998	237
5W-3644	234
	265
5W-5002	611
5W-5049	159
5W-5066	674
5W-5095	610
5W-5121	254
	259
	260
5W-5123	253
	254
	259
	260
5W-5475	263
5W-5627	230
	236
5W-5682	230
	237
5W-6315	888
5W-6355	244
5W-6378	715
	716
5W-6388	370
5W-6405	237
5W-6408	237
5W-7258	274
	275
5W-7641	237
5W-7642	237
5W-7643	237
5W-7644	237
5W-8017	393
5W-8380	244
5W-8650	81
5W-8655	81
5W-8656	81
5W-8657	81
5W-9413	658
	663
5W-9420	656
	672
	674
	721
	723
5W-9431	871
5W-9857	443
	446
	449
	452
	455
	457
	460
	476
	499
	549
	550
	555
	557
	571
	573
	574
	576
	635
	638
	640
5Y-0660	814
5Y-2425	282
	315
	317

6

Part	Page
6C-9089	202
	896
6C-9130	896
6C-9237	864
6D-3479	84
6E-0715	603
6E-0719	603
6E-0720	603
6E-0721	603
6E-0722	603
6E-0723	603
6E-0726	603
6E-1569	603
6E-1570	603
6E-1571	603
6E-1580	399
6E-1607	690
	696
6E-3283	586
6E-3337	586
6E-3861	690
6E-4240	599
6E-4401	696
6E-4928	681
6E-5060	701
6E-5479	654
6F-7045	185
6H-3592	130
6H-3616	36
6H-3957	10
6I-0217	11
	12
	28
	33
	63
	75
	76
	88
	90
	96
6I-0254	63
6I-0260	33
	41
	51
	53
	73
	88
	90
	101
	337
6I-0289	44
6I-0364	5
6I-0423	27
6I-0456	53
	124
6I-0563	75
	76
6I-0572	33
6I-0594	96
6I-0631	92
	93
6I-0645	28
6I-0650	28
6I-0654	31
	33
	88
	90
	96
6I-0839	63
6I-0917	73
6I-1090	46
	47
6I-1418	113
	114
6I-1497	44
6I-4200	88
	90
6I-4374	177
6I-4681	33
6I-4793	51
	53
6I-5470	890
6J-7836	776
6M-5062	719
	720
	723
6S-8584	848
6T-3631	900
6T-6308	263
6T-6408	263
6V-0400	414
	416
	440
	476
	503
	507
	511
	526
6V-0401	527
6V-0405	61
6V-0852	482
	517
	526
	687
6V-1179	587
6V-2317	84
	871
6V-2369	108
6V-2652	238
6V-2722	108
6V-3668	231
	238
6V-3823	237
6V-3922	354
	690
	693
	714
	721
6V-4429	340
6V-4433	518
	526
	687
6V-4589	584
	658
6V-5049	663
6V-5055	388
6V-5196	338
6V-5200	335
6V-5210	197
	199
	848
	855
6V-5215	609
6V-5217	871
6V-5320	324
	328
6V-5326	674
	690
	695
	714
6V-5391	674
6V-5586	696
6V-5654	848
6V-5683	661
6V-5738	291
6V-5778	599
6V-5842	264
6V-6317	610
6V-6560	226
	227
6V-6936	265
6V-6957	908
6V-7238	21
	22
6V-7357	175
	281
	857
6V-7636	889
6V-7676	304
6V-7688	227
6V-7723	335
6V-7744	159
6V-8002	587
6V-8149	163
	165
	230
6V-8200	654
	683
6V-8201	395
	601
6V-8202	689
6V-8227	606

PART NUMBER INDEX

Part	Page
6V-8352	700
6V-8367	482
	485
6V-8397	381
	383
	397
	405
	407
	410
	412
	418
	422
	443
	446
	449
	450
	452
	453
	455
	457
	458
	460
	463
	466
	468
	470
	472
	478
	479
	482
	485
	488
	489
	491
	492
	495
	496
	498
	500
	502
	503
	506
	507
	510
	511
	513
	515
	517
	518
	520
	523
	525
	527
	528
	529
	531
	532
	537
	540
	541
	544
	547
	551
	553
	561
	565
	578
	580
	623
	626
	630
	633
	635
	638
	640
	642
	644
	646
	648
	649
	686
	776
6V-8398	227
	391
	404
	405
	407
	409
	412
	420
	422
	478
	482
	485
	488
	491
	492
	495
	496
	513
	517
	518
	522
	526
	529
	532
	535
	547
	559
	561
	563
	565
	628
	649
	652
	686
	687
	703
	706
6V-8399	656
	672
	703
	706
6V-8400	623
	631
6V-8625	517
	547
	686
6V-8634	381
	383
	466
	468
	470
	472
	517
	537
	540
	544
	578
	580
6V-8636	443
	446
	449
	452
	455
	457
	460
	466
	468
	470
	472
	478
	485
	488
	498
	500
	503
	507
	510
	513
	515
	520
	523
	525
	528
	531
	537
	540
	544
	623
	626
	630
	633
	635
	640
	642
	644
	646
	649
	686
	776
6V-8637	440
	482
	502
	506
	510
	528
	531
6V-8638	478
	488
	491
	495
	517
	652
6V-8639	478
	482
	488
	513
	547
	649
	652
	686
6V-8640	528
	531
6V-8642	510
6V-8647	776
6V-8675	263
6V-8713	443
	446
	450
	453
	455
	458
	460
	500
	503
	507
	511
	535
	635
6V-8715	381
	383
6V-8716	526
6V-8721	478
	488
	522
	628
	652
6V-8723	466
	468
	470
	472
	517
	537
	540
	544
6V-8724	466
	468
	470
	472
	478
	488
	513
	515
	517
	529
	531
	537
	540
	544
	626
	630
	633
	635
	638
	640
	644
	646
	648
6V-8734	526
6V-8774	642
	644
6V-8775	529
	532
6V-8781	479
	489
	503
	507
	630
	633
	646
6V-8789	559
	561
	563
	565
6V-8936	492
	496
	518
	649
6V-8938	443
	446
	450
	453
	455
	458
	460
	500
	503
	507
	635
6V-8941	482
6V-8943	491
	495
6V-8944	526
6V-8978	599
6V-8979	463

► PRIMARY REFERENCE

PART NUMBER INDEX

Part	Page
	776
6V-8980	463
	551
	553
	561
	565
	776
6V-8981	491
	495
6V-8984	526
6V-9001	485
	642
6V-9002	491
	495
6V-9004	440
	503
	507
	511
6V-9005	491
	495
6V-9007	503
	507
6V-9023	130
6V-9168	463
	482
	485
	525
	551
	553
	561
	565
	776
6V-9169	485
	492
	496
	559
	561
	563
	565
6V-9172	527
6V-9632	894
6V-9746	424
	426
	428
	430
	432
	434
	436
	438
	440
	444
	447
	450
	453
	456
	458
	461
	474
	475
	476
	482
	492
	496
	500
	502
	503
	506
	507
	510
	511
	526
	528
	529
	531
	532
	555
	557
	574
	576
	636
	638
	640
	646
6V-9807	551
	553
	561
	565
6V-9808	559
	561
	563
	565
6V-9828	776
6V-9829	482
	523
	529
	532
	551
	553
	561
	565
	687
	776
6V-9830	486
	529
	532
6V-9836	503
	507
	511
	523
	529
	532
	623
	626
	630
	635
	640
	687
6V-9837	485
	492
	496
	649
6V-9838	511
6V-9843	529
	532
6V-9844	485
	518
6V-9846	482
	529
	532
6V-9850	381
	383
	478
	488
	498
	503
	507
	515
	517
	528
	531
	635
	640
	646
6V-9851	485
	517
	526
	649
6V-9872	547
6V-9873	526
6V-9874	528
	531
6Y-2942	229
	236
6Y-2943	229
	236

7

Part	Page
7C-4616	28
7D-7233	61
7E-6087	813
7I-1352	366
	368
	373
7I-2272	908
7J-9108	443
	446
	450
	453
	455
	458
	460
	491
	496
	500
	503
	507
	510
	511
	535
	635
7J-9933	674
7K-1181	150
	152
	154
	192
	197
	199
	201
	202
	204
	206
	210
	217
	218
	225
	440
	444
	447
	450
	453
	456
	458
	461
	463
	465
	466
	468
	470
	472
	486
	495
	500
	503
	507
	511
	515
	518
	523
	525
	537
	540
	544
	578
	580
	636
	734
	735
	738
	781
	782
	919
	924
7L-2180	263
7M-8485	354
	491
	495
	526
7N-0718	109
	►185
7N-5274	108
7T-0508	609
7T-0510	265
7T-0552	229
	236
7T-0558	229
	236
7T-0560	229
	236
7T-0561	229
	236
7T-0562	229
	236
7T-0563	229
	235
7T-0564	229
	235
7T-4532	807
	812
7T-6799	207
	209
7T-8891	888
7W-1176	27
7W-2632	124
7X-0510	527
7X-0578	889
	900
7X-0579	113
	114
	311
7X-0591	608
7X-0605	848
7X-0613	251
	252
	255
	256
	257
	258
	261
	262
	529
	532
	633
7X-0622	163
	165
7X-0623	808
	810
	861
7X-0796	159
7X-0818	113
	114
7X-0851	790
7X-2459	527
7X-2475	226

PART NUMBER INDEX

Part	Page
	865
7X-2489	304
7X-2533	112
	116
	148
	404
	405
	407
	409
	410
	412
	418
	420
	422
	444
	447
	450
	453
	456
	458
	461
	482
	500
7X-2534	466
	468
	470
	472
	500
	537
	540
	545
	636
	638
7X-2535	466
	468
	470
	472
	551
	553
	561
	565
7X-2537	264
	908
7X-2539	57
	58
7X-2543	555
	557
	574
	576
7X-2550	646
7X-2551	642
7X-2552	307
	608
	651
	787
7X-2553	726
	730
7X-2554	850
	852
7X-2556	32
	847
	865
7X-2557	847
7X-2565	246
7X-2619	113
7X-2621	615
	617
7X-2906	395
7X-3174	242
7X-3229	919
	924
7X-3387	578
	580
7X-4744	677
7X-4803	726
	730
	749
	751
7X-5762	230
	237
7X-6315	120
	121
	122
7X-7644	919
	924
7X-7700	103
7X-7729	59
	60
	64
	67
	74
	282
	285
	288
	311
	416
	424
	426
	428
	430
	432
	434
	436
	438
	444
	447
	450
	453
	456
	458
	461
	500
	583
	798
7X-7958	61
	69
7X-8592	681
7Y-0623	850
	852
7Y-1647	294
7Y-1648	294
7Y-1863	294
7Y-2219	►755
	761
	762
	763
	764
7Y-2397	730
7Y-2496	741
	749
	751
7Y-2497	291
	726
	728
7Y-2498	291
	726
	728
	749
	751
7Y-3355	730
7Y-3591	356
7Y-3950	216
7Y-3951	129
	130
	133
7Y-3952	128
	130
	132
7Y-3953	216
7Y-3962	131
	144
7Y-3963	131
	144
7Y-3964	131
	144
7Y-3965	131
	144
7Y-3966	131
	144
7Y-3967	131
	144
7Y-4622	366
	368
	373
7Y-4633	366
	368
	373
7Y-5116	356
7Y-5119	356
7Y-5216	358
	366
	368
	373
7Y-5219	696
7Y-5227	744
7Y-5239	356
7Y-6190	287
	315
7Y-7388	173
	606
	906
7Y-7992	428
	430
	434
	436
	450
	453
	458
	500
7Y-8165	291
8	
8B-5972	244
8C-3078	676
8C-3085	721
8C-3098	719
	720
8C-3114	602
8C-3131	721
8C-3445	48
8C-3451	578
	580
8C-3681	61
8C-5064	112
	148
8C-5608	112
	116
	148
	156
8C-5918	108
8C-6354	197
8C-6854	482
8C-6855	527
8C-7563	535
8C-8451	112
	116
	148
	156
	503
	507
	511
8C-8988	640
8C-8989	518
8C-9660	191
8E-6259	765
8E-8293	888
8E-9490	769
8G-4189	370
8H-5303	185
8H-5306	185
8I-0685	485
8J-1256	492
	496
8L-2786	33
8L-8413	108
	130
	132
	218
8M-2773	466
	472
	540
8P-9770	766
	767
	768
	769
	770
	771
	772
8R-1573	886
8R-1577	886
8R-1585	886
8R-1613	886
8R-3260	886
8T-0075	511
	686
8T-0076	537
	540
	544
8T-0077	649
	687
8T-0087	192
8T-0249	492
	496
8T-0269	33
	658
	663
	721
8T-0271	676
8T-0286	192
8T-0289	103
8T-0328	103
	192
	798
	855
	908
8T-0379	482
	485
8T-0389	102
	288
	307
	808
	810
	819
	861
8T-0664	790
8T-0707	370
	377
	586
8T-1120	526
8T-1159	587
8T-1686	485
8T-1687	518
	652

► PRIMARY REFERENCE

PART NUMBER INDEX

Part	Page
8T-1779	492
	496
	529
	532
	623
	630
8T-1905	466
	472
	541
8T-2224	265
8T-2352	578
	580
8T-2396	658
	663
	894
8T-2659	848
8T-2922	676
	688
8T-2997	611
8T-3425	116
	291
8T-3490	64
	112
	116
	148
	285
	313
	850
8T-3597	850
	852
8T-3612	285
8T-3647	513
	626
8T-3844	535
8T-3957	375
8T-3998	719
	720
8T-4121	61
	67
	74
	84
	109
	112
	113
	116
	148
	150
	152
	154
	172
	204
	210
	299
	307
	311
	313
	388
	428
	430
	434
	436
	440
	450
	453
	458
	463
	485
	492
	496
	500
	503
	507
	511
	529
	532
	535
	549
	550
	555
	557
	571
	573
	574
	576
	578
	580
	592
	606
	615
	617
	623
	631
	640
	709
	776
	819
	854
	859
	865
	882
	905
8T-4123	227
	246
	291
	342
	559
	561
	563
	565
	726
	728
	730
	741
	745
	749
	751
	756
8T-4132	744
	789
	865
8T-4133	74
	109
	282
	311
	338
	387
	535
	709
	889
8T-4136	32
	60
	112
	113
	116
	148
	172
	282
	285
	288
	299
	307
	311
	428
	430
	434
	436
	450
	453
	458
	500
	535
	583
	606
	615
	617
	776
	798
	854
	905
8T-4137	59
	61
	64
	74
	84
	109
	285
	291
	294
	299
	311
	463
	486
	500
	547
	615
	617
	636
	638
	776
8T-4138	97
	100
	109
	192
	281
	486
	816
	848
	857
	888
8T-4139	32
	210
	285
	377
	745
8T-4140	32
	230
8T-4167	850
	852
8T-4171	156
	279
	282
	291
	503
	507
	511
	813
8T-4172	102
	503
	507
	511
8T-4173	32
8T-4174	745
8T-4179	848
	896
8T-4181	116
	150
	152
	154
8T-4182	503
	507
	511
	555
	557
	574
	576
	578
	580
	640
8T-4183	230
	244
	474
	475
	527
	529
	532
	567
	569
	623
	644
	785
	787
8T-4184	414
	416
	440
	476
	503
	507
	511
	567
	569
8T-4185	74
	440
	504
	511
	808
	810
8T-4186	84
	652
8T-4189	56
	69
	105
	116
	278
	279
	282
	287
	311
	315
	317
	520
	732
	819
	863
	908
8T-4190	109
	150
	152
	154
	889
8T-4191	64
	67
	150
	152
	154
	204
	859
	882
8T-4192	102
	282
	308
	309
	864
8T-4193	288
	582
	755
8T-4194	482

PART NUMBER INDEX

Part	Page
	527
8T-4195	60
	61
	67
	84
	244
	592
	808
	810
	861
	865
8T-4196	64
	67
	282
	288
	313
	492
	496
	529
	532
	549
	550
	571
	573
	623
	631
	636
	638
8T-4197	285
8T-4198	549
	550
	555
	557
	567
	569
	571
	573
	574
	576
	594
8T-4199	294
8T-4200	60
	84
	202
	291
	745
	830
	832
	833
	834
	835
	857
	906
8T-4223	102
	210
	282
	414
	416
	440
	476
	504
	507
	511
	527
	529
	532
	567
	569
	608
	642
	745
	785
	787
	850
	852
	890
	896
8T-4224	56
	57
	58
	59
	60
	69
	70
	84
	97
	100
	116
	127
	160
	161
	162
	172
	202
	279
	282
	287
	311
	315
	317
	338
	381
	383
	478
	489
	520
	583
	626
	732
	745
	814
	819
	822
	848
	850
	852
	857
	861
	863
	867
	874
	906
	908
8T-4226	109
8T-4241	603
8T-4244	210
	282
8T-4648	864
8T-4754	191
8T-4779	226
8T-4780	291
	726
	728
	730
	741
	745
	749
	751
	756
8T-4908	55
	59
	201
	282
	285
	291
	308
	311
	314
	381
	383
	478
	489
	583
	649
	733
	819
	848
	874
8T-4956	282
	608
	850
	852
	890
8T-4970	109
	150
	152
	154
	192
	315
	317
	381
	383
8T-4971	315
	317
	857
8T-4984	61
8T-4987	69
8T-4999	919
	924
8T-5005	440
	504
	507
	511
	527
	808
	810
8T-5041	642
	644
8T-5063	338
8T-5381	338
8T-5400	905
8T-5429	649
8T-5436	808
	810
8T-5460	745
	787
8T-6338	517
8T-6385	789
8T-6412	900
8T-6466	102
8T-6467	299
8T-6628	399
8T-6685	535
	595
8T-6693	855
8T-6699	181
8T-6703	61
	69
	70
8T-6725	478
	489
	529
	532
8T-6726	527
8T-6842	919
	924
8T-6850	84
	227
	478
	489
	529
	532
8T-6868	511
	535
	864
8T-6870	633
	649
8T-6895	485
8T-6912	529
	532
8T-6974	535
8T-7329	465
8T-7488	227
8T-7524	528
	531
	615
	617
8T-7547	160
	161
	162
	172
	311
	338
8T-7909	61
8T-7934	523
8T-7942	399
8T-8549	808
	810
8T-8729	105
	128
	130
	138
	144
	146
	159
	167
	172
	181
	187
	188
	190
	207
	209
	218
	225
	606
	686
	828
	905
8T-8730	128
	130
	144
	146
	172
	189
	207
	210
	215
	225
8T-8737	128
	130
	131
	132
	134
	135
	136
	137
	138
	139
	141
	146
	150
	152
	154
	207
	210

► PRIMARY REFERENCE

PART NUMBER INDEX

Part	Page
	216
	218
	606
	831
	836
	869
8T-8887	503
	507
	630
8T-8899	492
	496
8T-8902	502
	506
	517
	633
	686
8T-8987	478
	488
8T-9082	908
8T-9402	94
	97
	99
	100
8T-9403	440
	504
	508
	511
	549
	550
	555
	557
	571
	573
	574
	576
	578
	580
	640
8T-9534	825
8T-9597	236
8T-9756	108
8U-0119	686
8U-0198	►389
	528
8U-0215	478
	488
	492
	495
8U-0216	492
	495
8U-0235	491
	495
8U-0236	491
	495
8U-0241	491
	495
8U-0284	474
	475
	476
	482
	526
	567
	569
	623
	644
	646
8U-0722	389
8U-0723	389
8U-0724	389
8U-0754	230
	238
8U-0767	611
8U-0966	390
	►393
8U-0967	390
8U-1218	656
	672
	674
	721
	723
8U-1242	319
	321
8U-1278	263
8U-1361	599
8U-1366	611
8U-1368	611
8U-1369	611
8U-1371	611
8U-1372	611
8U-1373	611
8U-1378	611
8U-1862	387
8U-1958	362
	364
8U-1961	263
8U-1967	354
8U-2354	237
8U-2506	235
8U-2738	108
8U-2743	393
8U-2744	393
8U-3213	871
8U-3214	871
8U-3216	871
8U-3284	265
8U-3591	230
	238
8U-3592	230
	238
8U-4683	874
8U-5005	377
8U-5056	387
8U-5801	338
8U-5805	871
8U-5806	871
8U-5807	871
8U-5809	871
8U-5923	227
8U-5927	230
8U-5983	263
8U-5988	263
8U-6065	266
8U-6068	265
8U-6069	265
8U-6072	265
8U-6074	265
8U-6075	265
8U-6079	230
	236
8U-6120	61
	545
8U-6457	665
	701
8U-6465	656
	672
8U-6849	354
8U-7203	525
8U-7339	253
	254
	259
	260
8U-7383	656
	672
8U-7389	656
	672
8U-7965	609
8U-8074	584
8U-9215	609
8U-9216	609
8Y-6967	864

9

Part	Page
9D-3768	64
	105
9F-2167	361
9F-5644	185
9G-0002	108
9G-0005	108
9G-4336	108
	140
9G-4343	108
9G-4344	140
9G-8909	108
9J-0705	697
9J-3167	765
9M-5024	597
9M-7958	337
9P-7121	103
9R-2613	777
9R-2821	150
	152
	154
9R-3176	263
9R-5615	861
	863
9R-7941	195
	204
9R-7942	168
	175
9R-7958	168
9R-7980	195
	204
9S-4183	588
	589
	590
	615
9S-4185	33
9S-4190	103
9S-8002	354
	361
	596
9S-8004	361
	399
	482
	513
	529
	532
	587
	597
	626
	674
	677
	691
9S-8005	354
	440
	466
	468
	470
	472
	513
	537
	540
	544
	586
	674
	712
	713
9S-8006	674
	721
9S-8008	586
	597
	599
	677
9S-9334	354
9T-2584	264
9T-2837	684
9T-2905	294
9T-3721	690
9T-3726	599
	688
9T-3853	681
9T-3928	597
	599
	667
9T-3929	654
	688
9T-3930	667
	691
9T-4817	693
9W-0844	169
9W-0852	94
	99
	138
	169
9W-1951	130
9W-4926	263
9X-0630	263
9X-0656	377
9X-1813	105
	187
	188
	686
9X-2041	842
	890
9X-2042	192
	760
	817
	867
	890
	892
	894
	900
9X-2043	900
9X-2044	176
	814
	875
	889
	890
	892
	900
9X-2045	176
	760
	890
	892
	894
	896
	900
9X-2201	70
9X-2205	103
9X-2609	688
9X-3401	128
	130
	131
	132
	134
	136
	137
	138
	139
	141
	145
	146
	147

► PRIMARY REFERENCE

PART NUMBER INDEX

Part	Page
	191
	197
	199
	207
	210
	338
	615
	617
	686
	812
	821
	823
	831
	836
	869
9X-3402	128
	130
	131
	132
	135
	136
	137
	138
	139
	141
	143
	144
	145
	146
	191
	207
	210
	216
	218
	869
9X-3404	108
9X-3463	159
9X-3595	366
	368
	373
9X-3604	356
9X-3959	49
9X-4244	160
	161
	162
9X-4597	343
	344
	345
	730
9X-4598	345
9X-4617	654
9X-4619	658
9X-4626	658
	663
9X-6154	691
9X-6165	112
	116
	148
	156
	906
9X-6381	848
9X-6550	528
	531
9X-6574	377
9X-6579	527
9X-6580	483
9X-6581	444
	447
	450
	453
	456
	458
	461
	500
	504
	508
	636
9X-6772	303
9X-7301	358
9X-7345	492
	496
9X-7385	807
	812
9X-7454	529
	656
	672
9X-7680	395
9X-7849	168
9X-8139	168
9X-8256	61
	84
	97
	100
	109
	112
	113
	116
	128
	148
	150
	152
	154
	175
	190
	192
	197
	202
	279
	281
	486
	535
	798
	813
	816
	830
	832
	833
	834
	835
	857
	888
	900
9X-8257	109
	150
	152
	154
	170
	171
	226
	288
	307
	582
	651
	726
	730
	755
	785
	847
	850
	852
	865
	890
9X-8290	317
9X-8600	103
9X-9896	112
	116
	148
	156
0	
005-8592	672
012-0380	187
	188
030-1705	108
031-4392	615
	617
033-5879	659
	697
033-6028	586
033-6034	214
	661
	663
033-6036	586
033-6039	395
033-6041	681
033-7687	26
054-6512	229
	235
054-6513	229
	235
054-6514	229
	235
061-8639	329
	330
	331
	661
	663
067-2551	84
067-6043	17
067-6070	184
067-6135	9
	13
	15
067-6179	28
067-6823	17
	49
082-3084	377
082-3085	377
085-7539	491
085-9311	294
086-0321	755
086-0322	755
087-4772	397
	399
087-5548	356
087-5550	356
087-5805	743
	744
087-6444	726
	730
089-7435	814
	822
089-7436	814
	822
091-2436	130
	133
091-4537	285
092-3635	537
	540
	544
092-5524	282
093-0065	741
	756
093-0083	291
	726
	728
	749
	751
093-0084	291
	726
	728
093-0086	741
	749
	751
093-0090	726
	730
093-0097	741
093-0115	291
	726
	728
	749
	751
093-0116	291
	726
	728
093-0118	741
	749
	751
093-0122	726
	730
093-0349	291
	726
	728
	730
	741
	745
	749
	751
	756
093-1433	749
	751
093-1434	348
	349
	741
093-1571	366
	368
	373
095-0662	584
095-0703	349
	785
095-0723	197
	207
	209
095-0742	128
	192
095-0755	889
095-0758	814
	817
095-0882	263
095-0916	871
095-0919	377
	584
095-0929	373
095-0930	264
095-0933	681
095-0934	264
095-0941	335
095-0944	587
095-0948	787
095-1207	838
095-1267	356
095-1393	787
095-1608	320
	321
	615
	617
095-1631	366
	368
	373
095-1635	356
095-1716	358
095-1750	703
	706
095-9785	787
096-0007	346
	352

► PRIMARY REFERENCE

PART NUMBER INDEX

Part	Page
096-0015	776
096-0061	592
	606
096-0192	181
096-0433	787
096-0854	343
	344
	346
	351
	352
	741
	749
	751
096-1054	358
096-1588	366
	368
	373
096-2323	264
	871
096-2622	867
096-2626	150
	152
	154
096-3884	867
096-5962	207
	209
096-6095	320
	321
	615
	617
096-6100	354
	656
096-6166	197
	199
	855
096-8139	358
098-2982	377
098-5747	785
099-0169	785
099-0823	889
	900
099-2374	606
	798
	874
099-3094	587
099-3629	158
	899
099-3645	860
099-3649	70
099-5845	599
099-6418	101
099-7091	741
099-7127	855
099-8232	672

1

Part	Page
100-3751	28
100-4458	88
	90
100-4830	10
	28
	75
	76
	591
100-4841	30
100-7740	281
	287
101-2846	195
101-3895	11
	12
	28
101-4639	61
	103
	615
	617
101-7398	352
	416
	424
	426
	428
	430
	432
	434
	436
	438
	440
	443
	446
	449
	452
	455
	457
	460
	500
	502
	510
	555
	557
	574
	576
	635
	638
101-7399	502
	506
101-7400	623
	630
101-7401	404
	405
	407
	409
	410
	412
	418
	420
	422
101-7403	535
101-7404	175
	305
	341
	414
	416
	424
	426
	428
	430
	432
	434
	436
	438
	440
	443
	446
	449
	452
	455
	457
	460
	491
	495
	500
	510
	567
	569
101-8899	844
	867
101-8900	867
102-2073	10
102-2075	10
102-2076	10
102-2078	10
102-7364	688
102-8703	465
102-8704	465
102-8801	138
	139
102-8802	94
	99
	105
	128
	134
	135
	136
	141
	144
	146
	156
	159
	167
	169
	172
	187
	188
	210
	633
	807
	812
	837
102-8803	145
	181
	197
	199
	338
	615
	617
	686
102-8804	135
	136
	145
	146
	147
	156
	218
103-1742	485
103-5687	50
	88
	90
103-5705	11
	12
103-8378	373
103-8379	373
103-8380	373
104-1995	128
	130
	131
	133
	136
	137
	207
	218
104-3173	61
104-6692	134
	136
	146
105-2169	889
105-2740	73
105-3477	440
	510
105-3478	416
	424
	426
	428
	430
	432
	434
	436
	438
	440
	443
	446
	449
	452
	455
	457
	460
	476
	499
	549
	550
	571
	573
105-3484	84
	593
	808
	810
105-3486	478
	488
	491
	495
105-3487	478
	488
	491
	495
105-3488	559
	561
	563
	565
	882
105-3489	630
	642
105-7360	358
105-7366	349
	358
107-0269	547
107-2348	71
107-2723	826
	828
	869
107-2724	808
	810
107-3116	395
107-3308	765
107-4316	526
107-5665	263
107-6738	615
	617
107-9403	527
108-1029	2
	3
	4
	►168
108-1781	376
108-4282	84
	523
	584
	635
	638
108-5678	686
108-7516	633
	686
109-2354	814
109-2356	814
109-5700	266
109-7288	381

► PRIMARY REFERENCE

PART NUMBER INDEX

Part	Page
	►385
109-7411	388
110-0120	234
	265
110-0121	234
	265
110-0122	234
	265
110-0124	234
	265
110-0137	234
110-0138	234
110-0139	234
110-0140	234
110-0142	235
110-0144	234
110-0146	234
110-0148	234
110-0150	234
110-0151	234
110-0152	234
110-0153	234
110-0154	234
110-0155	234
110-0156	234
110-0157	234
110-0158	234
110-0846	237
110-0848	235
110-0858	237
110-1991	491
	495
110-2170	226
110-4737	231
	238
	377
110-4743	237
110-6135	►244
	246
110-6349	526
110-6628	608
111-0859	23
	107
111-1857	1
	►860
111-1858	1
	►376
111-1896	403
	►608
111-1897	►342
	403
111-3999	745
111-4063	745
111-7604	741
	749
	751
111-7605	749
	751
111-7898	130
	132
	137
	207
	218
111-7899	197
	199
	466
	468
	470
	472
	538
	541
	544
	855
112-4628	397
	599
112-4657	335
112-4719	695
112-5704	520
	►826
112-6921	356
112-7704	184
112-8624	299
112-8625	299
112-9145	246
112-9837	277
113-0434	523
	623
	626
	630
113-0435	523
113-0436	515
113-0440	528
	531
	648
113-0442	523
113-0454	578
	580
	630
113-0489	515
113-0490	523
113-0693	610
113-2003	376
	613
	614
113-2004	476
113-2127	291
	726
	728
113-4630	147
113-4686	299
113-7584	90
113-7617	594
	595
	596
113-8129	63
113-8490	192
113-8491	192
113-8492	192
113-8493	192
114-0203	676
114-0204	676
114-0205	676
114-0207	659
	663
114-0215	676
114-0217	676
	►694
114-0755	358
114-0756	356
114-0758	366
	368
	373
114-0787	658
	661
	663
	676
114-2943	633
	676
	677
114-2999	329
	330
	331
	661
114-3025	329
	330
	331
	661
114-3070	694
114-4363	27
114-6658	150
	152
	154
114-8843	108
	145
	197
	199
	215
114-8907	175
	305
114-9153	391
114-9155	391
114-9324	404
	405
	407
	409
	410
	412
	418
	420
	422
	491
	495
	559
	561
	563
	565
114-9325	404
	405
	407
	409
	410
	412
	418
	420
	422
115-1624	850
	852
115-5579	210
115-6850	661
	676
115-7764	676
	694
115-8634	535
115-8645	919
	924
115-9114	485
115-9530	697
116-0118	172
	210
116-1119	826
116-1132	828
116-4481	825
116-4484	825
116-6325	279
	314
116-7286	424
	426
	428
	430
	432
	434
	436
	438
	443
	446
	449
	452
	455
	457
	460
	499
	635
	638
	640
116-8151	485
116-9945	871
116-9946	871
117-0121	60
	64
	848
117-0125	282
117-0345	338
117-0669	315
	317
117-0670	315
	317
117-0951	385
117-1266	526
117-1495	385
117-1755	609
117-1805	470
	472
	544
117-1823	466
	468
	537
	540
117-4874	609
117-4875	609
117-5716	597
117-5718	597
117-5761	603
117-5762	603
117-5764	603
117-5765	603
117-5787	691
117-5789	691
117-5790	691
117-5899	690
117-5900	690
117-5905	690
117-5911	691
117-5912	691
117-5913	691
117-5917	332
117-5920	332
117-5923	333
117-5924	333
117-5925	333
117-5926	333
117-6549	919
	924
117-6716	528
	531
117-7002	485
117-7235	599
117-7236	599
117-7238	335
117-7239	335
117-7240	335
117-7241	335
117-7242	335
117-7245	335
117-7246	335
117-7247	335
117-7248	335
117-7249	335
117-7250	335
117-7251	335
117-7273	689
117-7275	397
	►695
117-7276	397
	►696
117-7278	397
117-7279	397

► PRIMARY REFERENCE

PART NUMBER INDEX

Part	Page
117-7280	397
117-7282	397
117-7511	559
	561
	563
	565
117-7524	690
	693
117-7629	737
	739
117-7630	734
	737
	739
	784
117-7631	734
	737
	739
	784
117-7634	303
	734
	735
	738
	781
	782
117-7635	734
	735
	738
	782
117-8683	838
117-8699	826
117-8700	826
	828
	869
117-9081	188
117-9896	320
	321
	745
	756
118-2716	370
118-2717	370
118-2727	370
118-2730	370
118-2731	362
	364
	370
118-2732	370
118-3113	362
	364
118-3114	362
	364
118-3116	370
118-3117	362
	364
	370
118-3119	362
118-3120	362
	364
118-3121	362
	364
118-3122	362
	364
118-3123	362
	364
118-3124	362
	364
118-3125	362
	364
118-3126	362
	364
118-3127	362
	364
118-3128	362
118-3129	362
	364
118-3130	362
	364
	370
118-3131	362
	364
	370
118-3132	362
	364
	370
118-3133	362
	364
118-3134	362
118-3135	362
	364
118-3139	474
	475
118-3534	108
	▶186
118-7987	908
118-8599	517
118-8984	474
	475
	623
	630
	644
	646
118-8985	474
	475
	623
	630
	635
	638
	640
	644
	646
119-0744	517
119-3662	131
	137
	207
120-0090	197
120-4162	525
120-4204	603
120-4394	395
	397
120-9729	94
	99
121-0528	525
121-0530	525
121-0883	27
121-0987	855
121-2970	140
121-5327	61
	97
	204
121-5977	338
121-7098	857
121-7136	805
	857
121-7137	805
	857
121-7138	857
121-7196	669
	670
121-7677	229
	235
121-7678	229
	236
121-7679	229
	235
121-7680	229
	235
121-8088	264
	377
121-8089	264
121-8093	264
121-8094	265
121-8097	264
121-8098	264
121-8101	264
121-8112	721
121-8116	266
121-8117	265
121-8118	265
121-8119	265
121-8120	265
121-8121	265
121-8122	265
121-8123	265
121-8126	265
121-8129	265
121-8167	230
	237
122-1233	523
	646
122-1904	684
122-7252	745
122-7945	677
122-7946	661
	676
122-8912	141
122-9068	335
122-9070	335
122-9071	335
122-9363	696
122-9657	857
122-9718	599
123-0173	721
123-0175	721
123-0179	721
123-2017	395
	397
123-2341	659
123-2342	354
123-2899	31
	50
123-3605	305
123-4801	2
	3
	4
	▶744
123-4954	586
123-4968	2
	▶789
123-5102	282
123-5786	395
123-5787	395
123-5798	683
123-5799	683
123-5800	395
	718
123-7575	599
123-7615	131
	136
123-8303	640
	646
123-8642	32
	865
123-8838	108
	140
123-9769	681
124-2634	693
124-3536	34
124-3598	385
124-3815	28
	75
	76
	88
	90
	182
	183
	212
	213
	214
	337
	813
124-7346	105
	109
	204
124-9850	586
124-9853	334
124-9855	334
124-9856	334
124-9857	334
124-9858	334
124-9859	334
124-9860	334
124-9881	395
124-9882	395
124-9884	395
124-9887	681
124-9888	681
124-9948	681
124-9950	681
125-1379	586
125-2205	395
125-3249	606
125-3553	681
125-4784	130
	132
125-4785	131
	132
125-6083	606
	814
	817
125-6084	814
	817
125-6996	362
	364
125-6998	362
	364
125-7874	129
	131
	133
	135
	136
	137
	138
	139
	142
	143
	144
	145
	146
	207
	225
125-7875	129
	131
	133
	135
	136
	137
	142
	146
	207
	218
125-7876	133
125-8601	597
	599
125-8689	691
125-9095	332
125-9096	332
125-9108	333

▶ PRIMARY REFERENCE

PART NUMBER INDEX

Part	Page
125-9134	335
126-1529	294
126-1766	130
126-1767	128
	131
	132
	134
	136
	137
	139
	141
	146
	147
	633
	686
	812
126-1768	128
	131
	132
	135
	136
	137
	138
	139
	141
	143
	144
	146
126-1774	134
	138
	139
	210
126-3212	10
126-3831	175
	305
126-5211	861
126-5648	279
126-7574	120
126-8059	826
	828
	869
126-9093	80
	84
127-0580	889
127-2091	291
127-4613	341
127-4996	482
	567
	569
127-8987	377
127-9580	64
	305
	319
	321
	756
	814
128-0994	291
128-1041	108
128-1423	64
128-1465	59
128-1733	237
128-1734	237
128-2135	894
128-2136	894
128-3031	352
	373
128-4168	130
128-4178	128
	130
	132
	145
128-5858	726
	730
128-7675	229
128-7676	229
	236
128-7677	229
	236
128-7680	229
	236
128-7681	229
	236
128-7683	229
	236
128-7684	229
	236
128-7685	229
	236
128-7686	229
	236
128-7687	229
	236
128-7688	229
	236
128-7689	229
	236
128-7690	229
	236
128-7691	229
	236
128-7692	229
	236
128-7693	229
	236
128-7694	229
	236
128-7695	229
	236
128-7901	226
128-8364	282
128-8389	291
	745
128-8537	175
	305
129-3178	175
	281
	315
	317
	896
129-3180	889
129-3181	482
129-3830	919
	924
129-4508	828
129-4682	502
	506
	630
	644
129-9111	291
129-9912	234
	265
129-9913	234
	265
129-9914	234
	265
129-9915	234
	265
129-9916	234
	265
129-9959	537
	540
130-0252	857
130-0270	857
130-0458	246
130-1151	515
130-1152	515
	635
130-1153	502
	506
130-3881	810
130-8153	513
130-8154	515
130-8155	498
130-8233	649
131-0432	825
131-1497	135
	136
	146
131-3539	279
	282
	814
	861
	863
131-3540	308
	649
	814
	861
131-3714	888
131-3983	127
131-3990	814
	817
131-5492	127
131-6454	276
132-1805	204
132-3056	103
132-4262	377
132-4263	377
132-4265	377
132-4266	377
132-4268	377
132-4292	377
132-4295	264
132-5789	192
	202
	212
	213
	214
133-1011	28
133-2154	478
	489
	515
	623
	630
133-2424	749
	751
133-2425	291
	726
	728
	749
	751
133-2427	726
	730
133-2428	728
133-2717	756
133-4419	291
133-5813	517
	523
	547
133-8016	889
133-8831	251
	252
	255
	256
	257
	258
	261
	262
133-9469	71
134-3355	108
134-4126	120
	121
	122
134-7258	919
	924
134-8948	755
134-9680	242
	►340
134-9682	340
135-2442	753
	754
	784
135-2443	753
	754
	784
135-2444	753
	754
135-3437	237
135-4990	499
	635
	638
135-7454	395
135-7455	395
135-7933	370
135-7934	370
135-7935	370
135-7936	370
135-7937	370
135-7938	370
135-7939	370
135-8966	874
136-0155	773
	774
136-1613	491
	495
136-1862	515
136-4184	681
136-4192	354
136-7701	►335
	599
136-7703	335
137-4234	761
	763
	764
137-7249	387
137-9373	510
137-9629	525
138-1898	528
	531
	630
	642
138-5184	130
	132
138-7948	528
	531
	633
	644
	649
138-9355	520
138-9357	515
138-9358	515
	635
138-9359	515
139-1942	502
	506
	520
139-2840	587
139-4016	440
	502
	506
	510
	526
139-5751	440
	502
	506
	510
	526

► PRIMARY REFERENCE

PART NUMBER INDEX

Part	Page
139-6911	121
139-7119	897
139-7126	889
139-7127	889
139-7392	528
	531
139-8929	599
	▶688
139-9220	688
139-9222	688
139-9223	688
139-9224	688
139-9225	688
139-9227	688
140-1250	520
	633
140-1983	491
	495
140-6312	277
140-7197	299
140-7583	633
140-7599	440
	502
	506
	510
141-2759	192
141-2778	735
	738
	753
	754
	782
	784
141-2785	737
	739
	784
141-2786	737
	739
	784
141-7742	628
141-7812	676
	▶697
141-9203	311
142-0485	900
142-1412	683
142-1623	362
	364
142-2946	362
142-7425	440
	502
	510
142-7433	737
	▶753
142-7434	739
	▶754
142-9117	130
	132
143-5906	636
	638
143-5907	819
143-8031	358
143-8034	358
143-8150	358
144-0195	888
144-0367	70
144-1636	130
144-6060	478
	488
	510
144-7122	299
144-8070	478
	488
144-9102	399
145-2513	387
145-3542	599
	▶689
145-3543	▶397
	599
145-3810	689
145-3811	689
145-3812	689
145-3813	689
145-4911	26
145-5004	482
145-6735	387
145-7118	547
145-7713	440
145-7750	▶386
	478
145-8746	681
146-6346	60
146-6553	▶332
	597
146-6554	332
146-6555	332
146-6747	919
	924
146-9039	478
	488
147-1445	134
147-1446	134
147-5044	264
147-5819	358
148-4685	296
148-7786	486
148-8315	510
148-8318	381
	383
	466
	468
	470
	472
	517
	537
	540
	544
	578
	580
148-8319	381
	383
148-8322	528
	531
148-8324	528
	531
148-8326	547
148-8327	440
	482
	502
	506
	510
	528
	531
148-8336	443
	446
	449
	452
	455
	457
	460
	466
	468
	470
	472
	478
	485
	488
	498
	500
	502
	506
	510
	513
	515
	520
	523
	525
	528
	531
	537
	540
	544
	623
	626
	630
	633
	635
	640
	642
	644
	646
	649
	686
148-8338	510
	686
148-8339	526
148-8340	478
	482
	488
	513
	547
	649
	652
	686
148-8341	443
	446
	450
	452
	455
	458
	460
	500
	503
	507
	511
	535
	635
148-8343	528
	531
148-8345	478
	488
	491
	495
	517
	652
148-8346	485
148-8347	503
	507
148-8353	485
	642
148-8354	491
	495
148-8355	491
	495
148-8364	517
	547
	686
148-8367	381
	383
	478
	488
	498
	503
	507
	515
	517
	528
	531
	635
	640
	646
148-8370	485
	517
	526
	649
148-8371	640
148-8372	478
	488
	522
	628
	652
148-8374	466
	468
	470
	472
	517
	537
	540
	544
148-8375	491
	495
148-8377	551
	553
	561
	565
148-8378	466
	468
	470
	472
	478
	488
	513
	515
	517
	528
	531
	537
	540
	544
	626
	630
	633
	635
	638
	640
	644
	646
	648
148-8381	649
148-8384	463
148-8391	478
	488
148-8395	440
	466
	468
	470
	472
	513
	537
	540
	544
148-8408	588
	589
	590
	615
148-8410	103
148-8412	526
148-8414	491

▶ PRIMARY REFERENCE

PART NUMBER INDEX

Part	Page
	495
148-8415	492
	496
	517
	649
148-8417	482
148-8420	517
148-8424	502
	506
	517
	633
	686
148-8427	485
148-8433	503
	507
	511
	523
	529
	531
	623
	626
	630
	635
	640
	686
148-8434	529
	532
148-8435	479
	488
	503
	507
	630
	633
	646
148-8436	529
	532
148-8439	642
	644
148-8443	527
148-8444	485
	492
	496
	649
148-8446	511
148-8454	559
	561
	563
	565
148-8458	551
	553
	561
	565
148-9037	674
148-9042	674
148-9044	674
148-9045	674
148-9047	674
148-9050	674
148-9051	674
148-9053	674
148-9054	674
148-9561	299
149-4076	703
	706
149-4077	703
	706
149-5050	192
149-5051	128
149-5069	129
149-5070	129
149-5071	129
149-5881	264
149-6246	386
150-3024	61
	64
150-3036	466
	472
	541
150-3954	640
150-4033	482
	529
	532
150-4034	482
	485
150-4037	485
	518
150-4043	526
150-4044	492
	496
	529
	532
	623
	630
150-5311	140
150-5884	366
	368
	373
150-8896	773
	774
151-4522	831
	836
151-6282	787
151-6703	867
	900
151-6704	867
	900
151-6813	900
151-6815	900
151-6832	900
151-8865	352
	424
	426
	428
	430
	432
	434
	436
	438
	443
	446
	450
	453
	455
	458
	460
	499
151-8866	440
	499
	555
	557
	574
	576
	635
	638
151-9272	633
	686
	869
151-9274	191
	869
	905
151-9275	606
151-9461	867
151-9497	867
151-9557	900
151-9576	900
152-1809	599
152-7372	376
	►377
153-3568	875
153-4708	265
153-4709	265
153-4710	265
153-4711	265
153-4712	265
153-6199	551
	553
	561
	565
153-6237	440
	503
	507
	511
153-6241	518
153-6243	526
153-6249	630
153-6256	535
153-6257	559
	561
	563
	565
153-6262	526
154-0172	723
154-9822	478
155-0576	113
	114
	124
155-0824	377
155-0849	377
155-0850	377
155-0851	377
155-0852	377
155-0855	377
155-0856	377
155-0857	377
155-0858	377
155-0864	377
155-0865	377
155-0866	377
155-0867	377
155-0868	377
155-0869	377
155-0870	377
155-0872	377
155-0874	377
155-0875	377
155-0876	377
155-0877	377
155-0878	377
155-2255	134
	137
	139
155-2256	132
155-2260	134
	137
	207
	219
155-2265	136
	150
	152
	154
	156
155-2270	128
	131
	134
	136
	141
	144
	146
	156
	169
	172
	189
	210
	215
	225
	869
155-2271	128
	130
	132
	134
	136
	137
	143
	145
	207
	219
155-2274	131
	136
	207
155-6985	513
	517
	649
156-1785	488
156-4282	443
	446
	450
	453
	455
	458
	460
	500
	503
	507
	635
156-5306	465
156-6175	888
156-6554	900
156-6562	900
156-6563	900
156-6579	900
156-6598	867
156-6599	889
156-6600	867
156-6627	900
156-6631	897
156-6642	856
156-6643	867
156-6645	867
156-6656	875
156-6657	875
157-0055	587
157-0056	587
157-0489	84
157-2348	535
158-7864	909
159-3042	74
159-3046	279
159-3727	102
159-4700	323
	326
	328
159-5255	22
159-7463	109
159-8036	776
159-8049	108
159-8050	108
159-9322	134
	138
	139
	210
159-9540	64
	282
	285
159-9541	88
	90
160-1501	338

► PRIMARY REFERENCE

PART NUMBER INDEX

Part	Page
	►871
160-3518	606
160-7689	210
160-7690	138
	139
160-8290	775
160-8499	689
160-8758	677
160-9192	102
161-3128	105
	192
161-3639	867
161-3650	867
161-3663	867
161-3684	900
161-3685	889
161-3698	900
161-6149	656
	672
161-6154	443
	446
	449
	452
	455
	457
	460
	500
	502
	506
	671
	721
161-6578	265
161-6987	150
	152
	154
161-9820	107
162-0177	482
	513
	529
	532
	626
162-1381	84
162-1415	633
162-6816	462
	667
	691
163-6795	195
	197
	199
163-7180	226
163-7181	226
164-0514	867
164-0515	867
164-0519	867
164-0527	889
164-0528	►856
	889
164-0648	900
164-0664	856
164-0666	899
164-5562	61
164-5577	526
164-5605	537
	540
	544
164-5608	518
	652
164-5629	633
	686
164-5912	237
164-6872	535
164-7468	88
	107
164-8908	649
	687
165-2273	22
165-6005	785
165-6006	785
165-6007	785
	787
165-9285	358
165-9286	356
165-9287	366
	368
	373
165-9383	693
166-0036	735
	738
	782
166-1496	346
166-8553	528
	531
166-8637	715
	716
167-3593	197
167-3630	131
167-3631	131
167-7018	889
167-7039	867
167-7042	889
167-7270	919
	924
167-7782	785
168-3158	735
	738
	782
168-6666	808
	810
168-7790	785
168-8242	785
	787
168-8672	773
	774
168-9204	513
168-9604	491
	495
169-0328	785
169-0329	►360
	785
169-0700	785
169-0701	773
	►785
169-3923	360
169-5660	808
	810
169-8323	734
	737
	739
	784
169-8324	737
	739
	784
169-8397	263
169-8432	264
169-8433	264
170-0271	522
170-0831	263
170-1350	340
170-5121	462
170-5707	745
170-6888	192
170-6890	128
170-6891	129
170-7721	861
	863
170-9394	128
170-9722	900
170-9724	892
170-9843	358
170-9844	356
170-9845	366
	368
	373
170-9859	358
170-9860	356
171-0596	191
	823
171-3689	774
	►787
171-3691	787
171-3693	787
171-3694	787
171-3695	787
171-3697	787
171-3698	787
171-3700	787
171-3702	787
171-4474	787
171-6728	492
	496
171-7420	892
171-7426	889
171-7566	808
	810
172-1102	779
172-3565	808
	810
173-8277	703
	704
	705
	706
	711
	714
173-9956	779
	►780
173-9970	780
174-2525	►773
174-2526	►774
174-3091	831
	836
174-5159	787
174-6945	787
174-7875	854
174-9972	597
175-0137	594
175-2308	186
	►187
175-2309	186
	►188
175-3355	821
	823
175-4291	160
	161
	162
175-4807	94
	99
175-7141	5
176-1902	857
176-1937	889
176-1938	889
176-1939	889
176-1941	856
176-1946	875
176-1947	875
176-1972	892
176-1986	889
176-1996	844
176-2947	219
176-5158	689
176-5311	226
177-0358	109
177-1997	518
177-2215	462
	635
177-6628	703
	704
	705
	711
	714
177-6629	703
	706
177-6854	397
177-6970	703
	704
	705
	706
	708
	711
	714
177-8628	►743
	775
177-9853	854
178-2823	►333
	597
178-2844	332
178-3586	854
178-5569	897
178-5572	899
178-5573	867
	899
178-5574	867
	899
178-5576	900
178-9029	537
179-0464	599
179-3151	377
179-3152	377
179-3154	377
179-3341	551
	553
	561
	565
179-4169	656
	672
179-4170	656
	672
179-4171	656
	672
179-4173	656
	672
179-4176	656
	672
179-4177	672
179-4178	656
179-4180	656
	672
179-4648	672
179-4649	656
179-4650	672
179-4651	656
179-4652	656
	672
179-4654	656
	672
179-4656	656
	672
179-4657	656
	672
179-4658	656
	672
179-4661	656
	672
179-4666	656
	672
179-4667	656
	672

► PRIMARY REFERENCE

PART NUMBER INDEX

Part	Page
179-4668	656
	672
179-4669	656
	672
179-4670	656
	672
179-4671	672
179-4672	656
179-6919	654
179-6922	690
179-6924	693
179-7071	24
179-9046	128
	131
179-9316	404
	405
	407
	409
	410
	412
	418
	420
	422
179-9625	358
179-9771	366
	368
	373
180-1375	587
180-1376	587
180-6519	871
180-6520	871
180-6523	871
180-6524	871
180-6526	871
180-9339	807
183-7754	131
183-8452	603
185-0230	356
185-0231	356
185-0884	17
185-1860	143
185-1861	141
185-3379	►440
	619
	620
185-6066	741
185-6632	528
185-6791	428
	430
	434
	436
	449
	452
	457
	499
185-6792	428
	430
	434
	436
	449
	452
	457
	499
185-6793	428
	430
	434
	436
	449
	452
	457
	499
185-6794	640
185-6798	424
	426
	432
	438
	443
	446
	455
	460
185-6799	424
	426
	432
	438
	443
	446
	455
	460
185-6801	476
185-6802	476
185-6803	476
185-6804	414
	424
	426
	432
	438
	444
	447
	456
	461
185-6805	424
	426
	432
	438
	444
	447
	456
	461
185-6807	502
	506
	510
185-6808	502
	506
	510
185-6809	440
	510
185-6810	440
	502
	506
	510
185-6820	551
	561
185-6824	409
	412
	420
	422
185-6825	409
	412
	420
	422
185-6826	410
	412
	418
	422
185-6827	410
	412
	418
	422
185-8180	867
185-8182	900
185-8196	889
185-8205	892
185-8221	900
185-8280	856
185-8281	856
185-8293	857
185-8300	800
	824
185-8302	800
186-0484	125
	►854
186-0499	402
	►593
186-0507	54
	►56
186-3140	482
187-0661	919
	924
187-3764	32
	865
187-5076	424
	426
	428
	430
	432
	434
	436
	438
	443
	446
	449
	452
	455
	457
	460
	499
187-5078	440
	502
	506
	510
187-5079	428
	430
	434
	436
	449
	452
	457
	499
187-5080	409
	410
	412
	418
	420
	422
187-5081	428
	430
	434
	436
	449
	452
	457
	499
187-8001	597
	599
	667
	668
187-9305	730
187-9307	728
188-1361	726
	728
188-1792	404
	407
188-1793	404
	407
188-1794	404
	407
188-1795	404
	407
188-1798	405
	407
188-1799	405
	407
188-1800	405
	407
188-1801	405
	407
188-1813	381
	383
188-1814	547
188-3351	726
	730
188-3352	291
188-3354	730
188-3357	728
188-3761	291
188-3917	749
	751
188-4991	►370
	605
188-6042	741
188-6374	528
	531
188-7607	402
	►476
189-2055	428
	430
	434
	436
	449
	452
	457
	499
189-2059	499
	635
	638
189-2060	428
	430
	434
	436
	449
	452
	457
	499
189-2061	291
189-2062	428
	430
	434
	436
	449
189-2678	892
189-2702	897
189-2704	889
189-3014	676
189-3016	676
189-3158	128
	808
	810
189-4208	291
189-5681	661
189-6154	677
189-6159	677
189-9977	329
	661
190-0284	►741
	747
	748
190-4375	207
	209
190-5334	728
190-5335	349
	358
	741
190-8199	►599

► PRIMARY REFERENCE

PART NUMBER INDEX

Part	Page
	601
190-8206	1
	►294
190-8207	►296
	298
190-8532	440
190-8537	510
190-8539	510
190-8544	450
	453
	458
	500
190-8545	526
190-8546	526
190-8547	526
190-8548	526
190-8550	578
	580
190-8551	578
	580
190-8552	499
	635
	638
190-8553	547
190-8557	547
190-8558	547
190-8560	547
190-8561	234
	265
190-8563	234
	265
190-8565	234
	265
190-8566	234
	265
190-8567	234
	265
190-8657	395
190-8718	395
190-9752	658
	663
	676
190-9825	741
191-1641	416
	428
	430
	434
	436
	449
	452
	457
	499
191-1642	416
191-2708	654
191-2710	654
191-2711	654
191-2712	654
191-2713	698
191-2714	698
191-2715	698
191-2716	698
191-2809	654
191-2962	654
191-3539	597
191-3952	654
	►698
191-3954	698
191-3956	698
191-8920	584
192-0705	677
192-4522	855
192-5239	779
192-7111	697
192-7117	661
	676
192-7120	595
	596
192-9074	559
	561
	563
	565
192-9075	559
	561
	563
	565
192-9076	559
	561
192-9207	80
193-1123	234
	265
193-1124	234
	265
193-1454	235
193-1455	235
193-1458	235
193-1460	235
193-1461	235
193-1462	235
193-1463	235
193-1464	235
193-1465	235
193-1466	235
193-1467	235
193-1469	235
193-1470	235
193-1471	235
193-3973	148
	202
193-5014	755
193-5015	755
193-5970	651
193-9056	197
	199
193-9057	197
	199
193-9063	466
	468
	470
	472
	538
	541
	544
193-9064	538
	541
	544
194-1983	335
194-5039	749
	751
194-5226	143
194-5227	143
194-6989	537
	540
	544
194-7841	676
194-7843	207
	209
194-7845	528
	531
194-7849	615
194-9386	404
	405
	407
	409
	410
	412
	418
	420
	422
194-9387	404
	405
	407
	409
	410
	412
	418
	420
	422
194-9388	510
	535
194-9389	443
	446
	449
	452
	455
	457
	460
	499
	502
	506
	510
	535
194-9390	510
	535
194-9391	428
	430
	434
	436
	449
	452
	457
	499
194-9394	499
	635
	638
194-9395	499
	635
	638
194-9396	499
	635
	638
194-9397	428
	430
	434
	436
	449
	452
	457
	499
195-0168	563
	565
195-0176	563
	565
195-0799	518
195-1907	510
	►671
195-2186	337
195-3042	596
195-7685	404
	405
	409
	410
	418
	420
	551
	553
195-7691	814
195-7747	703
	706
	708
	711
	714
195-7873	606
195-9089	704
	705
195-9245	11
	12
195-9396	276
195-9397	276
196-1666	824
196-1757	56
196-1767	102
196-1770	102
196-3533	741
196-4760	745
196-5380	549
	555
	571
	574
196-5381	549
	555
	571
	574
196-5382	555
	557
	574
	576
196-5383	555
	557
	574
	576
196-5384	555
	557
196-5387	462
196-5388	551
	553
	561
	565
196-5390	567
196-5650	97
	100
196-5693	281
196-6803	654
196-7486	►703
	721
196-7515	84
196-7543	537
	540
	544
	►704
196-7544	466
	468
	470
	472
	►705
196-7925	414
196-8426	518
196-8427	491
	495
196-8804	654
196-9060	520
196-9710	287
196-9711	287
196-9720	287
196-9728	287
197-3800	99
	169
197-4858	583
197-5319	404
	405
	407
	409
	410
	412
	418
	420
	422

► PRIMARY REFERENCE

PART NUMBER INDEX

Part	Page
	482
197-5681	814
197-5688	848
197-5689	848
197-5690	848
197-6054	377
197-6076	97
	100
197-6082	97
	100
197-6548	56
197-8159	57
	58
197-9990	745
197-9995	478
	488
	491
	495
198-0143	535
198-2532	482
198-4054	482
198-4777	626
198-5389	156
198-8262	10
198-8263	10
198-9084	387
198-9085	387
198-9124	841
199-1153	►706
	721
199-1155	704
	705
199-2441	603
199-2455	551
	561
199-2457	551
	553
	561
	565
199-2458	553
	565
199-2459	553
	565
199-3060	691
199-3109	27
199-4128	274
	275
199-6978	219
199-7479	485
	628
199-7552	594
199-7560	595
199-7618	84
199-8026	491
	495
199-9252	182
	183
199-9267	182
	183
199-9751	20
	182
	183
2	
200-0916	370
200-0917	370
200-0918	370
200-0919	370
200-0920	370
200-4050	569
200-4051	550
	557
	573
	576
200-4052	550
	557
	573
	576
200-5125	156
200-6181	502
	506
	510
200-6345	578
	580
	857
200-7499	482
201-0048	547
201-0502	826
	869
201-0533	826
	828
201-0895	826
201-0901	826
	828
201-1395	828
201-2484	825
201-2485	825
201-3088	278
201-3976	861
	863
201-3977	861
	863
201-3999	861
201-4014	855
201-4021	140
201-4022	136
	140
201-4024	108
201-4391	867
201-4417	889
201-4530	889
201-7153	502
	506
	510
201-7473	444
	447
	456
	461
201-8752	513
201-8754	814
201-8755	513
201-8756	523
201-8758	523
201-8759	515
201-8768	814
201-8780	64
202-3165	726
	728
	749
	751
202-4100	►462
202-4990	141
202-5466	59
202-7201	175
202-7570	405
	407
202-7897	360
202-8137	229
	236
202-8138	229
	236
202-8139	229
	236
202-8140	229
	236
202-8141	229
202-8142	229
	236
202-8143	229
	236
202-8144	229
	236
202-8145	237
202-8149	237
202-8517	658
	663
202-8518	658
	663
202-8519	658
	663
202-8520	661
202-8522	676
202-8523	676
202-8524	658
202-8525	658
202-9635	235
202-9636	235
202-9637	235
202-9643	235
202-9644	235
202-9669	235
202-9670	235
202-9671	235
202-9673	235
202-9679	235
202-9680	235
202-9681	235
202-9683	691
203-0213	721
203-0215	230
	236
203-1911	502
	506
	642
203-1913	510
203-1920	502
	506
	510
203-1921	518
203-1926	528
	531
203-1930	491
	495
203-2917	551
	553
203-3840	466
	472
203-4464	281
	315
	317
	906
203-4561	735
203-4562	735
203-5417	230
	237
203-9007	132
204-0317	537
	540
	544
204-0682	559
	561
	563
	565
204-1297	141
204-2281	109
	112
	116
	217
	503
	507
	511
	578
	580
	857
204-3975	230
	235
204-4951	659
204-4964	663
204-5099	706
	708
204-6353	658
	699
	702
204-6354	663
205-0453	889
205-0826	156
205-1414	704
	705
205-2453	630
	642
205-3930	491
	495
205-3931	491
	495
205-4015	684
205-5690	684
205-6210	►876
	877
	879
205-6215	547
205-6218	802
	803
205-6219	803
205-6295	889
205-6308	305
205-8257	156
206-1345	143
206-1826	101
206-2423	466
	468
	470
	472
	486
	496
	502
	506
	510
	537
	540
	544
206-2725	288
206-3623	279
206-5007	661
206-5008	661
206-5010	661
206-5011	661
206-5013	661
	►699
206-5162	158
206-5208	156
206-6921	108
206-7094	676
206-7106	676
206-7124	676
206-7125	676
206-7126	676
206-7127	676
206-9348	279
	282
206-9349	287
207-0416	658
	663
207-0418	658

► PRIMARY REFERENCE

PART NUMBER INDEX

Part	Page
207-0805	663
207-0807	658
207-0983	658
207-1219	140
207-1706	32
207-1707	32
207-1716	658
	663
207-2159	94
	99
207-2607	658
207-3085	658
207-3164	658
	663
207-5209	684
208-0212	877
208-0218	886
208-0220	886
208-0222	886
208-0225	886
208-0231	877
208-0232	877
	879
208-0233	877
208-0234	877
208-0235	877
208-0236	877
	879
208-0238	877
208-1133	877
208-1134	877
208-1163	877
208-1658	97
	100
208-3494	883
208-3510	883
208-7047	478
	488
208-8469	184
208-9756	491
	495
209-3062	291
209-3565	688
209-4853	163
	165
209-8296	863
209-9219	18
209-9719	681
210-0603	287
	▶302
210-0605	302
210-0606	302
210-0613	302
210-1330	724
210-1331	802
210-1925	710
	711
	721
210-1939	291
210-8236	850
	852
211-6062	626
211-7560	163
	165
212-6679	397
	▶700
212-6763	440
	502
	506
	510
212-6831	861
212-6833	861
213-4636	848
213-8350	131
213-8351	131
213-8433	361
213-9100	105
213-9243	721
213-9908	319
	321
214-0864	135
	136
214-3402	658
	663
214-3403	659
	663
214-3413	659
	663
214-5087	661
214-5088	661
214-7568	503
	507
	659
	686
214-9350	32
214-9376	32
215-1187	676
215-1193	677
215-4723	485
215-9415	281
215-9632	84
215-9986	366
	368
	373
216-0003	366
	368
	373
216-0084	375
216-0086	375
216-0088	375
216-2178	848
216-2180	848
216-4191	299
216-4193	299
216-4197	32
216-4199	32
216-7523	661
216-9633	48
217-0099	124
217-0288	395
217-3403	282
	291
217-3850	684
217-6421	900
217-7877	10
217-9039	143
	184
	212
	213
	214
218-0404	156
218-2619	848
218-2657	905
219-0302	919
	924
219-0305	847
	850
	852
219-5628	676
219-5762	197
	199
219-6714	654
220-2593	236
220-5815	207
	209
220-8311	177
220-9081	791
220-9084	766
	767
	768
	770
	771
	772
220-9090	791
	792
	793
	794
221-2760	654
221-3491	654
221-3539	370
221-3541	354
	370
221-3546	362
	364
222-5792	377
222-5793	377
222-8625	10
223-1394	825
223-3572	311
224-6474	251
	252
	255
	256
	257
	258
	261
	262
224-6475	253
	254
	259
	260
224-8831	676
224-8945	913
224-8946	916
224-9029	919
	924
224-9210	661
224-9718	913
224-9719	916
225-0312	916
225-0313	913
225-1221	879
225-1943	483
225-3150	5
225-4256	913
225-4257	916
225-6522	41
225-7738	63
225-7944	53
225-8019	63
225-8524	71
225-8526	71
225-8698	370
225-8858	17
226-4195	663
226-8766	28
226-8767	28
227-6000	491
227-6007	606
227-6008	874
227-6009	606
227-7390	913
227-7391	916
227-8179	871
228-2615	913
228-2616	916
228-2780	913
228-2781	916
228-3369	773
	774
228-3839	243
	▶246
228-4947	182
	183
228-5615	726
228-7089	44
	503
	507
228-7100	88
	90
229-2800	491
229-2801	491
229-6964	▶791
229-6965	▶793
229-6966	▶794
229-6969	▶792
229-9082	▶844
	866
230-0859	911
	912
230-4009	128
	130
	132
	136
	141
230-4010	128
	130
	131
	132
	134
230-4011	134
	141
	143
230-4012	130
	132
	134
	141
230-4013	128
	134
	141
230-4014	190
230-5008	137
	207
	218
230-5009	136
230-5010	134
	141
	216
230-5011	130
	132
	134
	225
230-7732	503
	507
	511
230-8022	502
	506
230-8094	33
231-0146	▶930
231-2295	134
	137
	207
	210
231-2296	134
231-2297	136
231-2300	128
	130
	132
	146
	210
231-2301	130
	132
231-9230	814
	817
232-0893	134
	146

▶ PRIMARY REFERENCE

PART NUMBER INDEX

Part	Page
232-1322	18
	20
232-1693	202
	212
	213
	214
232-2085	766
	767
	768
	770
	771
	772
232-2086	766
	767
	768
	770
	771
	772
232-3666	28
232-3751	53
232-6314	140
232-6315	108
	140
232-7449	18
232-7596	17
232-7597	17
232-7599	17
233-8732	266
233-8738	229
233-8739	230
233-9615	626
234-1097	197
234-3242	354
234-3243	354
234-4186	304
234-4855	354
234-6468	894
234-6469	894
234-6470	894
234-6471	894
234-6472	894
234-6473	894
234-6476	894
234-6483	894
234-6485	894
234-6490	894
234-6491	892
234-6497	894
234-6498	894
234-6521	894
234-6549	892
234-6550	892
234-6579	894
234-9356	676
234-9357	677
235-0455	787
235-1838	659
	661
	663
	677
235-2175	659
	661
	663
	677
235-3599	528
235-4123	141
235-5646	▶325
	517
235-5763	759
235-8873	798
235-8874	798
235-8875	798
235-8876	844
235-8877	844
235-8878	844
235-8879	844
235-8880	813
235-8891	857
235-8922	892
235-8928	892
235-8950	892
235-9014	859
236-0562	633
236-2428	▶394
	615
	617
236-5189	394
236-5193	394
236-5511	33
236-6366	743
236-8009	668
236-9838	658
	663
237-0075	▶145
	219
237-0227	134
237-0947	361
237-1925	▶323
237-2228	311
237-4163	244
237-5175	828
237-7251	266
238-0120	182
238-2318	197
	199
238-2319	128
238-3298	230
	237
238-3303	230
	238
238-3304	230
	238
238-3305	230
	238
238-3307	230
	238
238-3308	230
	238
238-3309	230
	238
238-4672	263
238-4673	263
238-4674	263
238-4676	263
238-4677	263
238-4678	263
238-4680	263
238-4682	263
238-4683	263
238-4684	263
238-4685	263
238-4686	263
238-4687	263
238-4689	263
238-4690	263
238-4691	263
238-4692	263
238-4694	263
238-4695	263
238-4696	264
238-4697	264
238-4698	264
238-4699	264
238-4700	264
238-4701	264
238-4702	264
238-4703	264
238-4704	264
238-4705	264
238-4709	264
238-4710	264
238-4711	264
238-4713	264
238-4714	264
238-4715	264
238-4717	264
238-4718	264
238-4719	264
238-4721	264
238-4722	266
238-4723	265
238-4725	265
238-4726	265
238-4729	265
238-4731	264
238-5087	263
238-5088	264
238-5653	264
238-6588	264
238-7441	906
238-8015	908
238-8245	134
	143
238-8247	134
	143
238-8288	73
238-8292	72
239-3798	59
239-5723	399
239-6986	919
	924
239-7349	128
239-7352	128
	134
239-7353	128
	137
	207
239-7356	128
	136
239-7357	128
	130
	132
239-9683	819
239-9686	819
239-9688	819
239-9689	819
239-9690	831
	836
	838
239-9954	116
	▶120
240-1366	207
240-4131	266
240-5074	844
240-6946	874
240-6953	515
240-6964	540
240-7879	134
	146
240-8464	782
240-8552	▶68
	69
241-2488	820
	▶821
241-2489	606
241-3125	526
241-6157	88
	90
241-6192	227
241-6199	227
241-7435	▶226
	243
241-7436	▶227
	243
241-8122	237
241-8368	97
	100
	108
	▶189
	192
241-8834	130
	132
241-8835	137
	207
242-0262	395
242-0588	163
	165
242-1780	892
242-1975	828
242-1978	826
	828
242-1979	826
242-2176	828
242-2608	681
242-2609	681
242-2610	681
242-2611	681
242-2612	681
242-2962	864
242-8004	395
242-9251	681
243-0378	230
	237
243-0905	236
243-0906	236
243-0909	236
243-0910	237
243-0911	237
243-0917	237
243-0918	237
243-0919	226
243-0920	372
243-0923	372
243-0925	372
243-0926	372
243-4046	▶684
	831
	836
	838
243-4051	606
243-4052	606
243-4053	606
243-4507	207
	209
243-5336	231
	238
244-1432	68
244-2418	282
244-2422	279
245-1042	141
245-1043	143
245-1044	141
	143
245-1048	141
	143
245-1729	615
245-2758	718
	▶723
245-3661	▶395
	586
245-3664	395
	▶681
245-3665	395
	▶683
245-3666	395
245-3668	681

▶ PRIMARY REFERENCE

PART NUMBER INDEX

Part	Page
245-3669	681
245-3671	681
245-3672	681
245-3673	683
245-3868	630
245-6397	299
245-6490	291
245-7760	195
245-7790	894
245-7791	844
245-7792	844
245-7793	844
245-7813	824
245-7814	824
245-7815	824
245-7816	824
245-7817	800
245-7818	800
245-7819	800
245-7820	800
245-7823	800
245-7824	800
245-7825	800
245-7826	800
245-7827	800
245-7828	800
245-7829	800
245-7830	800
245-7831	800
245-7833	800
245-7834	800
245-7835	800
245-7837	805
245-7838	800
245-7839	800
245-7846	800
	▶824
245-7847	800
245-7856	800
245-7872	844
245-7873	844
245-7905	805
246-2641	103
	919
	924
246-4361	87
246-5862	485
246-5863	482
246-5864	486
247-3222	633
247-4928	87
	88
	90
247-8455	440
248-7990	759
249-1278	▶609
	610
249-3948	838
250-1041	609
250-1042	609
250-1044	609
250-1045	609
250-1047	609
250-1656	528
	531
250-1744	725
	▶726
250-2078	725
	▶730
250-2150	725
	▶728
250-9603	877
250-9606	▶606
	866
250-9607	866
	▶882
250-9614	▶830
	866
250-9615	799
	▶859
250-9616	799
	▶857
250-9619	▶840
	866
250-9621	804
	▶837
	839
251-0637	195
251-4162	760
251-4169	201
251-4336	28
251-5594	▶708
	721
251-7921	619
	620
	▶642
251-7932	401
	▶623
251-7934	402
	▶649
251-7942	401
	402
	▶628
251-7947	402
	▶648
251-7950	402
	▶528
251-8038	635
	638
	▶661
252-5001	68
252-5002	68
252-5003	68
252-5004	68
252-5984	623
	▶663
252-6615	125
	▶179
252-6642	▶163
	173
252-6643	▶165
	173
252-6645	179
252-6646	179
252-6653	147
	▶156
252-6654	156
252-6685	▶819
252-6687	401
	▶820
252-6688	401
	402
	▶820
252-6689	401
	▶820
252-8921	681
252-9410	882
252-9767	▶424
252-9828	1
	▶102
252-9829	102
	▶103
252-9836	2
	3
	4
	▶277
252-9841	287
252-9844	906
252-9846	282
253-2259	▶913
253-2262	2
	3
	4
	▶916
253-2270	1
	▶909
253-3919	747
	▶749
253-3920	747
	748
	▶751
253-3982	334
253-6010	▶399
	597
253-6914	894
253-6915	894
253-6919	894
253-6922	857
253-6923	857
253-7769	690
253-7770	690
253-7771	690
253-7772	693
253-7773	693
253-7774	693
253-7775	693
253-7776	693
253-9834	▶32
	147
253-9836	54
	▶583
253-9837	54
	▶59
253-9841	799
	▶813
253-9843	54
	▶57
253-9844	54
	▶60
253-9845	▶69
	147
253-9846	▶70
	147
253-9848	▶22
	147
253-9849	54
	▶215
254-0394	▶549
	747
254-0395	▶550
	748
254-0403	▶551
254-0404	▶553
254-0470	402
	▶513
254-0477	402
	▶515
254-0485	402
	▶525
254-0488	630
	642
	644
	646
	▶656
254-0489	640
	▶672
254-2631	402
	▶547
254-2635	709
254-2639	▶665
	709
254-2643	652
	▶709
254-2649	513
	528
	531
254-2663	402
	▶517
254-2675	511
	▶674
254-2685	▶828
	837
254-2692	▶303
	403
254-3476	708
254-3633	212
254-7550	67
254-7611	728
254-7612	730
254-7614	749
254-7615	751
254-7873	69
254-9393	282
254-9394	282
254-9395	282
254-9397	282
254-9399	282
254-9400	301
	▶311
254-9404	279
254-9405	279
	285
	311
	315
	317
254-9409	279
254-9412	308
254-9413	282
254-9414	287
255-4410	875
255-8548	▶326
256-6392	282
256-6393	108
256-6419	309
256-6420	279
256-6454	182
	183
	615
	617
257-0384	605
	▶745
257-1709	243
	▶582
257-2216	730
257-2251	817
257-6104	▶825
	830
	832
	833
	834
	835
257-7619	▶814
	816
257-7621	814
258-0504	356
258-5131	64
258-5137	60
258-5140	813
258-6336	745
258-6358	745
258-6360	745
258-6391	745
258-6392	745
258-6396	745
258-7554	745
258-8506	346

▶ PRIMARY REFERENCE

PART NUMBER INDEX

Part	Page
	366
	368
258-8507	346
	366
	368
259-0134	▶167
	305
259-0891	399
259-2355	281
259-2385	281
259-2735	59
259-4883	195
259-6559	402
	▶478
259-6764	277
259-6765	314
259-6767	285
259-6772	285
	314
259-6773	285
259-6783	314
259-6797	311
259-6812	55
259-6813	311
259-7202	894
259-7214	875
259-7215	875
259-7353	894
259-7354	867
260-3526	69
260-3527	70
260-3530	69
260-3531	70
260-3534	74
260-3540	70
260-5083	814
260-5084	814
260-5085	▶802
	814
260-5086	814
260-5087	814
260-5104	817
260-5108	▶803
	817
260-5111	817
260-5112	830
	▶838
260-6439	813
260-7389	410
	412
	418
	422
260-7390	405
	407
260-7505	684
260-7506	684
260-7652	116
	148
	913
260-7653	112
	116
	148
260-8394	32
260-8398	863
260-8738	523
260-9280	803
260-9297	802
261-0698	64
	67
261-2992	64
	67
261-3529	60
261-3608	2
	3
	4
	725
	▶841
261-4201	661
261-4704	108
261-4773	57
	58
261-7117	828
261-7641	156
262-2714	60
262-2781	2
	3
	4
	▶873
262-4729	59
262-6678	60
262-6686	74
262-7741	515
	715
	716
262-7954	850
	852
263-2336	426
263-3629	230
	236
263-3630	230
	236
263-3701	230
	237
263-3704	230
	238
263-4057	230
	237
263-4725	130
	132
263-4911	263
263-5129	424
	426
	432
	438
	455
	460
263-5130	428
	430
	436
	449
	452
	457
	499
263-5131	414
	416
263-5132	416
	424
	428
	430
	432
	434
	436
	449
	452
	455
	457
	499
	567
	569
263-5133	414
	416
	424
	428
	430
	432
	434
	436
	443
	449
	452
	455
	457
	499
	567
	569
263-5134	414
	416
	567
	569
263-5618	416
	424
	428
	430
	432
	434
	436
	443
	449
	452
	455
	457
	499
	567
	569
263-5619	416
	567
	569
263-5621	414
	416
263-6333	424
	426
	432
	438
	443
	446
	455
	460
263-6335	424
	426
	432
	438
	443
	446
	455
	460
263-6336	424
	428
	430
	432
	434
	436
	438
	443
	446
	449
	452
	455
	457
	460
	499
263-6337	414
	416
	424
	428
	432
	434
	443
	449
	455
	457
	499
263-7038	424
	428
	432
	434
	443
	449
	455
	457
	499
	502
	506
	510
	919
	924
263-7058	414
	416
263-7116	428
	430
	434
	436
	449
	452
	457
	499
263-7512	215
263-9293	103
263-9294	285
263-9441	855
264-0513	156
264-3541	84
264-3542	84
	857
264-4737	721
264-7029	130
	132
	134
	141
	143
264-7030	128
	146
264-7031	128
	137
	207
	218
264-7032	128
	216
264-7033	137
	207
	210
264-7034	128
	130
264-8993	402
	▶578
264-8996	402
	▶526
265-3742	▶329
	676
265-3784	676
265-5331	906
265-5571	201
265-7156	633
	▶710
265-7163	633
265-7964	74
266-0554	820
	835
266-0556	628
	832
266-0558	833
266-0559	820
	834
266-0561	919
266-0982	440
	502
	506
	510
	919
	924
266-9565	677
266-9581	409

▶ PRIMARY REFERENCE

PART NUMBER INDEX

Part	Page
	412
	420
	422
266-9582	523
266-9583	523
266-9590	404
	407
266-9593	651
267-2477	61
267-2483	61
267-2486	94
	99
267-2488	▶81
	97
	100
267-7207	141
	143
267-7208	143
267-9572	141
	143
268-1554	528
	531
268-1555	528
	531
268-2550	181
268-8872	913
269-0121	916
269-2394	537
	540
269-2407	235
269-9105	54
	▶55
270-0174	362
	364
270-2679	132
270-3845	825
270-9433	84
271-2682	649
271-2683	440
271-5306	108
271-6282	▶690
	691
271-6283	690
271-6284	690
271-7649	535
272-2773	54
	▶491
272-4873	676
272-4965	814
	817
272-7076	919
	924
272-9660	693
272-9800	168
273-0847	658
	663
273-0849	658
	663
273-3623	108
273-4833	311
273-4835	▶278
	301
273-4838	181
273-4839	181
273-4840	103
	▶181
273-5345	900
273-5346	900
273-5711	43
273-8350	192
273-8351	192
274-1931	37
274-1935	25
274-3779	132
	135
274-3833	739
274-4990	143
274-5423	▶520
	620
	621
274-8353	735
	738
	782
275-2428	184
275-2431	184
275-4899	▶127
	147
275-4903	▶94
	100
275-4904	94
	99
275-4905	94
	99
275-4907	81
275-4909	810
275-4910	84
	919
	924
275-4912	147
	▶242
275-4913	22
275-4918	97
	100
275-4945	70
275-8157	586
	▶602
275-8158	▶334
	602
275-8159	602
275-8160	334
275-8161	334
275-8162	334
275-8163	334
275-8164	334
275-8165	334
275-9891	44
275-9897	33
276-2334	916
276-2336	804
276-3461	491
	495
276-4053	122
276-5271	491
	495
276-5278	515
276-5280	515
276-5281	515
276-5282	515
276-5548	285
	▶314
276-5560	311
	▶906
276-5600	17
276-5602	17
276-5603	18
	182
	183
276-7391	13
	15
276-7394	13
	15
276-7476	34
276-7478	34
276-8116	19
276-8117	19
276-8123	40
276-8133	40
276-8134	20
276-8614	▶145
	215
276-9200	38
276-9201	38
276-9206	38
276-9207	38
276-9230	38
277-2500	51
277-2923	63
277-2925	63
277-3012	28
277-3013	28
277-3430	890
277-4223	10
277-4302	20
277-4409	184
277-4993	86
	88
	90
277-5064	213
277-5065	213
	214
277-5307	38
277-9602	75
277-9603	75
277-9938	45
277-9940	45
278-0017	41
	75
	76
278-0964	606
278-3242	63
278-5111	38
278-5112	38
278-5113	38
278-5125	9
278-5170	82
278-5203	124
278-5278	760
278-5284	2
	3
	4
	▶105
278-6963	▶276
	282
278-6964	279
278-6967	282
278-6968	282
278-6977	311
279-5016	913
279-6422	61
279-9121	715
	716
279-9651	31
280-1911	▶38
	40
280-1912	38
280-1913	38
280-1914	38
280-2747	392
280-8912	440
	503
	511
281-0547	916
281-0791	805
281-1521	163
	165
281-1522	163
281-1523	165
281-1524	163
281-1526	165
281-4482	857
281-4483	857
281-4663	913
281-6268	583
	▶584
281-6269	591
	▶594
281-7039	51
281-7040	51
281-8744	50
281-8801	134
281-8804	143
281-8811	134
281-8812	137
	207
282-0591	606
282-5642	532
283-3190	402
	▶591
283-4148	23
283-5684	515
283-8341	877
283-9146	449
	452
	457
	499
283-9147	449
	452
	457
	499
284-4426	889
284-4651	798
284-4656	▶798
	866
284-8113	721
284-8115	721
284-9959	857
285-1133	120
285-2040	23
285-2991	33
285-3071	303
285-3468	282
285-6223	410
	412
	418
	422
286-0015	337
286-0123	96
286-2890	86
286-4162	861
286-4164	291
286-7851	72
286-9521	896
287-0309	760
287-4036	594
287-4944	676
287-5321	677
287-7334	535
	633
287-8597	27
288-0895	476
288-3658	440
	502
	506
	510
288-8033	658
	663
288-8034	658
	663
288-8035	659
	663
288-8036	659
	663
288-8631	173
288-8632	173
288-8649	125
	▶173

▶ PRIMARY REFERENCE

PART NUMBER INDEX

Part	Page
289-3195	136
289-4232	491
	495
	832
	833
	834
	835
289-7469	►159
	170
	171
	172
289-8336	23
289-9555	97
	100
290-4315	721
290-5479	►387
	615
290-5480	387
290-5562	217
	857
290-5825	686
290-6681	482
290-8448	►147
290-8580	265
290-9589	555
	557
	574
	576
	►669
290-9591	555
	557
	574
	576
	►670
291-3711	582
	►586
291-4623	658
291-4624	659
291-5803	658
	659
291-5804	584
	658
291-5805	658
291-5806	659
291-5807	659
291-9451	264
291-9452	264
292-2769	608
	►610
292-2770	610
	►611
292-2771	611
292-2893	184
292-2896	137
	143
	207
	218
292-3462	73
292-4450	911
	912
292-4451	911
	912
293-0511	586
	►654
293-0512	654
293-0556	147
	►158
293-1136	798
293-1137	800
293-1183	844
293-1184	844
293-2842	718
293-9452	109
	112
	116
	148
	202
	535
294-2566	710
	►711
294-2567	710
295-4155	735
	738
	782
295-4801	584
295-6358	237
295-6535	237
295-6536	237
295-6661	20
295-7688	535
	►712
295-7689	535
	►713
295-8553	712
	713
	►714
	717
295-8554	535
296-1857	315
	317
296-1875	287
296-4057	237
296-4125	919
	924
296-4146	919
	924
296-4147	919
	924
296-4152	919
	924
296-4895	782
297-0142	658
297-1412	694
	699
297-5131	606
297-5862	630
297-6534	819
	►869
297-7987	61
297-8107	535
	640
297-8752	190
298-2314	230
	237
298-2315	230
	238
298-2942	281
298-4282	916
	919
	924
298-4409	►498
	619
298-4479	667
298-4480	667
298-4481	667
298-5048	665
298-5049	665
298-5050	665
	►715
298-5053	665
298-5183	665
	►716
298-5184	715
	716
298-5227	665
298-5277	716
298-5789	131
	132
298-6020	537
	540
	545
	547
299-2149	584
299-2150	584
299-2151	584
299-3657	535
299-3659	535
	►717
299-5448	584
299-5511	40
299-5879	869
299-5880	869
299-5881	869
299-6044	913
299-6045	916
299-8919	285
299-8921	482
299-9227	401
	►522
3	
300-2254	309
300-2255	308
300-2256	315
	317
300-2260	311
300-2262	315
	317
300-2274	317
300-2279	315
300-2280	►315
	619
	620
	621
300-4417	877
301-0589	116
302-1835	759
302-7746	745
303-4154	264
303-9443	294
303-9444	294
303-9445	226
	227
303-9446	226
	227
303-9447	892
304-5062	31
304-5408	877
304-5409	877
304-5414	877
304-5418	883
304-5419	883
304-5422	883
304-5423	883
304-5424	883
304-5427	883
304-7356	277
304-8036	503
	507
304-8923	919
	924
304-9129	342
305-0361	897
305-3606	279
305-3612	282
	►308
305-3615	279
305-3628	308
305-5899	535
305-9192	759
306-2332	27
306-8030	74
307-0047	112
	116
	148
	913
307-2153	784
307-2338	141
307-2787	►381
	578
307-2789	628
	►652
308-4199	597
	►603
308-4200	603
309-0702	677
309-0703	►330
	677
309-2799	330
	331
309-5769	633
	686
309-6678	40
310-1424	911
	912
310-3126	282
	309
310-3130	►279
	282
310-3137	279
310-5053	535
311-1217	266
311-9103	623
	630
312-4585	485
312-5694	761
	762
	763
	764
	770
	771
	772
313-2048	913
313-9304	745
314-2885	510
314-4018	807
	812
314-8467	►331
	677
314-8468	677
315-0489	667
	►701
315-0490	►667
	709
315-5313	889
315-9810	75
316-6564	665
	667
	715
	716
316-6565	665
	667
316-6566	665
	667
316-7897	716
316-8230	246
316-8231	630
316-8846	800
316-8847	800
316-8849	800
316-8916	798
	►800
316-8918	800

► PRIMARY REFERENCE

PART NUMBER INDEX

Part	Page
316-8920	800
316-8921	800
316-9351	143
	337
317-3531	587
317-3663	535
317-5482	34
317-5485	13
317-5486	13
317-6608	732
317-6609	732
317-8429	▶327
	686
318-3028	919
	924
318-4258	▶807
	810
318-4545	342
	▶354
319-0755	146
319-3237	134
	146
319-3527	864
319-8426	9
320-3060	182
	183
320-3062	182
	183
320-4718	354
320-4719	354
320-4720	354
320-4721	354
320-4723	354
320-7146	596
320-9728	230
	237
320-9731	230
	237
321-1233	324
	328
321-5628	399
321-6131	8
321-6697	620
	▶732
321-6701	620
	▶733
321-8731	281
321-8732	278
	▶281
321-8733	285
321-8794	277
321-8798	615
	617
321-8799	613
	▶615
321-8800	301
	▶613
321-8803	285
321-8952	107
322-0099	▶338
	866
322-0100	338
322-4964	888
322-6342	658
	663
	▶724
322-6691	724
322-8964	207
	209
323-3272	905
323-7347	212
323-9312	34
324-0444	28
324-5678	130
	132
	134
	141
325-4471	▶160
	170
326-7289	12
326-7401	▶51
	53
326-7949	248
	255
	257
	261
326-9053	918
327-5108	665
327-5109	665
327-5110	665
327-5111	665
328-0072	140
328-0132	108
328-8804	230
	237
328-9815	782
329-2348	424
	426
	428
	430
329-2352	424
	426
	432
	438
	443
	446
	455
	460
329-2353	424
	426
	432
	438
	443
	446
	455
	460
329-2358	569
329-2367	549
	550
329-2372	416
329-2373	428
	430
	434
	436
	449
	452
	457
	499
329-2374	428
	430
	434
	436
	449
	452
	457
	499
329-2381	414
329-2382	414
	424
	426
	432
	438
	443
	446
	455
	460
329-2383	424
	426
	432
	438
	443
	446
	455
	460
329-2385	567
329-2390	491
	495
329-2391	491
	495
329-2394	416
329-2400	630
329-3734	128
	130
	131
	132
	137
329-3796	30
329-5735	593
	▶595
329-5736	▶596
329-7254	595
329-7255	596
330-4647	644
330-4651	644
330-4655	526
330-4656	476
330-4657	555
	557
	574
	576
330-4658	549
	550
	571
	573
330-4672	569
330-4676	476
330-4677	476
330-4681	440
	510
330-4697	623
330-4698	646
330-4700	474
	475
330-4701	474
	475
330-4702	635
330-4703	635
	638
330-4704	640
330-9723	88
	90
331-0290	34
331-1114	587
331-1371	714
331-1378	234
331-1379	234
331-1380	226
	▶234
331-1381	234
331-1382	234
331-1383	234
331-1384	234
331-1385	227
	▶229
331-1386	234
331-1388	235
331-1391	230
	235
331-1393	230
	235
331-1396	230
	235
331-1397	230
	235
331-1398	230
	235
331-1399	230
	235
331-1409	236
331-6835	17
332-0905	7
332-1393	567
332-7865	147
	212
332-7918	623
	630
333-0113	863
333-0118	863
333-0119	863
333-0120	▶861
333-0122	2
	3
	4
	▶863
333-0124	861
	863
333-1451	855
333-8001	236
333-8005	236
333-8007	263
333-8008	721
333-8009	236
333-8016	237
333-8017	237
333-8023	237
333-8024	237
333-8029	230
	237
333-8037	231
	238
333-8041	229
333-8042	229
333-8048	234
333-9780	808
	810
334-5425	246
334-6621	857
335-0642	913
335-0643	916
335-8611	71
336-3545	116
	▶178
336-6684	760
336-7377	230
	235
337-5750	▶113
	125
337-5751	197
	199
337-5752	125
	▶207
337-5753	207
337-5767	▶134
	206
337-5775	201
	▶760
337-5776	338
337-5778	▶218
	322
337-5779	218
337-5780	125
	▶192
337-5782	125
	▶176
337-5784	▶225
	625

▶ PRIMARY REFERENCE

PART NUMBER INDEX

Part	Page
337-5785	225
337-5786	115
	►210
337-5787	210
337-5788	615
	617
337-5789	►169
	725
337-5790	169
337-5792	►217
	620
337-5793	►146
	217
337-5794	113
337-5811	207
	209
337-5814	125
	►216
337-5816	125
	►201
337-5818	►115
337-5819	►114
	115
337-5829	190
337-5830	125
	►190
337-5847	114
	►125
337-5851	482
337-5852	485
337-5853	485
337-5867	485
337-5868	485
338-2368	197
	199
338-8346	285
338-8347	►285
	301
339-3505	►161
	169
	172
339-6258	658
	►702
339-8780	13
	15
339-9637	40
340-0260	466
	468
340-0261	466
340-0262	466
340-0263	537
340-0264	537
340-0267	403
	►482
340-0270	468
340-0271	468
340-0272	468
340-0275	403
	►485
340-0295	468
340-0353	784
340-0396	►443
340-0397	►499
340-3049	449
	452
	455
	457
	460
	499
	502
	506
340-3050	443
	446
	449
	452
	455
	457
	460
	499
	502
	506
340-3056	►502
	621
340-3060	443
	446
	449
	452
	499
340-3073	►506
	620
340-3125	635
340-3126	635
340-3200	919
	924
340-3235	►626
340-3236	64
340-3251	649
340-3252	649
340-3267	►324
	535
340-3268	►328
340-3327	626
	►668
340-3419	502
	506
340-3459	►588
	621
340-3470	635
340-3491	619
	►633
340-5800	335
340-6790	651
	►676
340-6880	1
	►291
340-6886	1
	►299
340-8343	358
341-9142	►320
	322
341-9145	►321
	322
341-9167	246
341-9196	319
342-2972	134
342-2973	134
342-2974	134
342-2975	134
	210
342-4355	145
342-6502	37
342-6510	37
342-9022	121
	122
342-9290	121
	122
343-9677	58
343-9724	857
344-5674	255
	256
	257
	258
	261
	262
344-5675	388
344-7390	338
345-1237	66
345-4467	463
345-7835	170
	171
345-8838	6
	►27
345-8901	6
	►26
346-0006	96
346-0007	96
346-0097	6
	►53
346-0220	6
	►42
346-0408	28
346-0737	6
	►46
346-1478	6
	►36
346-2911	6
	►49
346-3046	463
346-3047	463
346-4709	40
346-5495	192
346-7763	121
	122
346-8219	918
346-9376	112
	148
347-7580	766
347-7587	768
347-7589	767
347-7599	767
347-7715	►390
	392
347-8645	88
	90
348-0495	88
	90
348-4637	212
	213
	214
349-1178	324
	328
	502
	506
	510
	535
	633
349-6114	776
350-2546	919
	924
350-8546	►816
	866
350-8547	816
	►817
350-8958	7
350-9367	216
351-1724	37
351-4321	84
351-4749	33
351-5174	60
351-5175	127
351-8485	116
351-8488	121
351-8490	►121
	148
351-9780	127
351-9918	160
	161
	162
352-3206	894
352-3207	894
352-3209	197
	199
352-3316	817
352-3318	176
352-3319	176
352-3968	202
353-1601	770
	771
	772
353-1607	770
	771
	772
353-2017	759
353-2018	759
353-2151	800
	►805
353-2636	44
353-2811	770
	771
	772
354-6127	606
	►881
354-6986	176
354-7130	322
	►605
354-7270	1
	►147
354-7286	1
	►403
355-0598	116
355-0632	90
355-1213	112
	148
355-2319	230
	237
355-2511	►770
355-2512	►771
355-2513	►772
355-2518	770
355-2519	771
355-2520	772
355-3486	918
355-4053	84
355-4815	246
	►274
355-4816	246
	►275
355-5804	776
356-1219	143
356-1638	839
	►877
356-3986	88
	90
356-9586	756
356-9592	►319
	320
356-9593	321
356-9596	756
357-0994	905
357-2713	790
357-2714	790
357-9720	772
357-9722	772
357-9723	767
	772
357-9936	584
358-2135	319
358-2573	881
358-2920	756
358-8602	770
358-8605	770
358-8606	769
	770
358-8779	►362
	►364
	756

► PRIMARY REFERENCE

PART NUMBER INDEX

Part	Page
358-9923	630
	▶658
359-1162	540
359-1309	41
359-4768	4
	▶305
359-4769	▶144
	305
359-4773	305
359-4775	▶148
359-4777	112
	▶138
	148
359-4778	112
	148
359-5079	537
	540
	544
359-5080	466
	468
	470
	472
	537
	540
	544
359-5087	537
	540
	544
359-6672	538
	541
359-7115	90
359-9469	658
359-9486	658
360-1712	603
360-1978	13
360-2029	919
	924
360-2030	919
	924
360-2032	847
360-2033	850
360-3692	680
360-4644	61
	▶66
360-4645	66
360-8958	▶77
	78
360-8960	77
360-9510	756
361-1045	112
	148
	150
	152
	154
361-4832	61
361-4833	61
361-7480	385
	386
362-3495	279
362-5412	77
	78
362-9163	771
362-9165	771
362-9274	768
	771
362-9689	78
363-0559	13
	15
363-5813	337
363-8923	▶537
	605
363-8926	▶540
	605
364-0625	770
364-2786	▶146
	219
364-2788	112
	116
	148
364-2790	140
	141
364-2797	112
	116
	148
364-3890	84
364-5145	13
	15
364-7010	908
364-7012	313
364-7018	319
364-8088	443
	446
	449
	452
	455
	457
	460
	499
365-4070	771
365-5823	45
365-7700	▶304
365-7701	304
365-7704	304
366-1879	877
366-1880	877
366-1881	877
366-1882	883
366-1883	883
366-1884	883
366-1885	883
366-1890	877
	▶883
366-1892	263
366-3051	919
	924
366-4326	466
366-5873	668
366-5875	668
366-9373	90
367-0617	745
367-0844	919
	924
367-1817	50
367-3340	72
367-7142	53
367-8466	741
367-8467	741
367-8509	50
367-8512	50
367-9241	649
	▶718
368-2783	376
	▶587
368-3145	184
368-3169	721
368-3219	▶343
	725
368-3220	▶344
	725
368-3221	▶345
	725
368-3222	▶351
	725
368-3224	▶348
	747
	748
368-3243	343
	▶366
368-3244	344
	▶368
368-3245	345
	▶356
368-3246	351
	▶373
368-3248	348
	▶358
368-3267	366
	368
368-3269	356
368-3270	373
368-3272	358
368-5762	362
	364
368-5763	362
	364
368-6792	719
	720
368-6816	366
368-6817	368
368-6818	356
368-6819	373
368-6821	358
368-8559	▶45
	75
	76
369-1658	73
369-7799	82
370-2927	265
370-5236	125
370-5448	847
370-5468	850
	852
370-5469	850
	852
370-5480	850
	852
370-5481	850
	852
370-5487	850
	852
370-5488	850
	852
370-5502	850
	852
370-5513	93
370-5516	92
370-5517	92
370-5518	92
370-5520	▶92
	101
370-6545	17
371-2478	6
	▶30
371-2480	6
	▶40
371-2483	6
	▶82
371-2554	6
	▶37
371-2684	96
371-2691	96
371-2693	6
	▶8
371-2694	6
	▶24
371-2725	6
	▶28
371-2740	6
	▶31
371-2745	7
	▶48
371-3974	82
	▶83
371-7263	96
371-7328	230
	235
372-2297	6
	▶63
372-4119	230
	234
372-4122	234
372-4531	115
	▶122
372-4532	122
372-5012	282
	▶822
372-8052	913
372-8053	916
373-3606	6
	▶50
373-4195	789
373-8014	46
374-0829	2
	▶97
374-0830	97
	▶99
374-2640	124
374-4419	63
374-5162	358
374-5165	356
374-5170	356
374-6300	6
	▶13
	▶15
374-6301	6
	▶34
374-9053	366
	368
374-9055	366
	368
	373
374-9074	373
375-0098	6
	▶25
375-0482	101
375-0483	101
375-0498	172
375-0595	▶191
	219
375-0597	▶128
	192
375-1285	237
	▶372
375-1287	372
375-1289	372
375-1359	231
	238
375-1360	230
	238
375-2548	230
375-2647	▶95
	96
375-2649	101
375-4478	266
375-6310	264
375-6988	101
375-8254	95
375-8264	231
	238
375-8407	▶147
	213
	214
375-9272	27
376-3933	766
376-4068	88
376-4074	13

▶ PRIMARY REFERENCE

PART NUMBER INDEX

Part	Page
	15
376-4078	13
	15
376-4616	112
	►115
376-4761	11
376-6403	83
376-6405	83
376-6409	95
376-6410	95
376-6411	95
376-6464	7
376-9967	88
	90
377-0399	19
377-0400	19
377-0721	6
	►107
377-1293	212
	213
	214
377-1841	125
	►888
377-1843	►108
	125
377-1844	108
	►140
377-1848	►130
	197
377-1851	125
	►209
377-1852	►137
	209
377-1866	116
377-1867	125
	►202
377-1868	►141
	202
377-1869	125
	►204
377-1870	►136
	204
377-1875	116
377-1876	175
377-1878	109
377-1899	►219
	322
377-1913	113
	►126
377-1926	125
	►206
377-1940	►116
377-1941	116
	►139
377-2876	71
377-2877	►71
	75
	76
377-3724	►297
	298
377-4081	772
377-4710	125
377-5988	86
377-6932	143
377-8966	294
	►298
377-9082	8
377-9597	462
378-0594	6
	►33
378-0629	6
	►10
378-3484	6
	►44
378-8166	6
	►21
378-8167	6
	►918
378-8582	6
	►73
379-6626	6
	►41
380-1204	765
	►790
380-2039	7
	►75
	►76
380-2065	34
380-2625	502
	506
380-2626	502
	506
380-3616	470
380-4720	►510
	619
380-4781	291
380-9615	11
	12
381-5002	502
	506
383-1382	11
383-1388	11
	12
383-3581	►17
	18
383-5706	875
383-6929	899
383-6930	897
383-6931	899
383-6932	899
383-6933	867
384-2286	72
384-3888	183
384-4717	502
	506
384-4718	502
	506
384-5313	►19
	20
384-6533	867
	►903
384-7567	184
385-1398	87
385-2572	6
	►20
385-2891	346
385-2899	349
385-2900	349
385-2905	349
385-2920	352
385-2922	346
	352
385-4301	726
385-5363	41
385-5997	►143
	212
	213
	214
385-8201	154
385-8757	903
386-1188	443
	446
	449
	452
	455
	457
	460
	500
386-1864	87
386-2971	95
386-2976	95
386-3819	95
387-2699	313
387-2701	307
	►313
387-2705	313
387-2707	313
387-2708	313
387-2846	903
387-2847	903
387-2848	903
387-2849	903
387-2949	372
387-3577	88
	90
387-6395	820
	►823
388-0067	775
	►776
388-0084	776
388-0085	776
388-0086	776
388-0088	776
388-0090	776
388-0091	776
388-0099	776
388-0105	776
388-0110	776
388-0536	11
388-2516	236
388-4707	20
388-6876	776
388-7608	226
388-9091	892
388-9097	900
388-9105	843
	►867
388-9108	►897
	900
388-9586	►761
388-9591	►762
388-9592	761
	►766
388-9597	762
	►767
388-9604	766
388-9605	766
388-9606	767
	768
388-9607	767
	768
388-9608	766
388-9609	766
388-9610	767
	768
388-9611	767
	768
388-9612	766
388-9617	768
388-9618	767
388-9636	766
	767
	768
	769
389-0254	►763
389-0255	763
	►768
389-0957	766
389-0961	769
389-0962	768
389-0963	767
389-2366	288
389-2407	567
	569
	►680
389-3346	6
	►11
	►12
389-3863	212
	213
	214
389-5743	►797
389-5775	88
	90
390-0854	6
	►18
390-7626	73
390-9505	►361
	776
391-1474	769
391-1817	88
	90
391-2493	88
	90
391-2634	2
	3
	4
	►341
391-3732	34
391-3735	34
391-4811	6
	►96
392-2478	84
392-2480	84
392-2508	5
	►84
392-2510	84
392-2511	84
392-2630	64
392-2780	212
	213
	214
392-2938	►391
392-3970	►392
392-6907	6
	►23
392-7776	►317
	619
393-1539	402
	►651
393-2034	101
393-2035	101
393-4006	27
393-5467	93
393-5468	93
393-7499	776
393-7694	6
	►72
394-0525	►93
	101
394-9639	6
	►101
395-0110	6
	►182
	►183
395-0113	7
	►212
	213
	214
395-0114	7
	►184
395-1091	88
395-1633	92
	93
396-0032	693
396-0050	691

► PRIMARY REFERENCE

PART NUMBER INDEX

Part	Page
396-2351	894
396-2352	864
	894
396-2615	6
	▶9
396-4423	1
	▶125
396-4430	▶839
396-6834	1
	▶804
396-6835	804
	▶866
396-8795	9
398-5646	495
398-6226	101
398-7109	900
398-7110	900
4	
415-1604	31
415-1625	773
	774
	▶779
415-5625	6
	▶910
416-1065	86
416-1069	▶86
	88
	90
416-1277	349
416-1278	349
416-1279	349
416-1280	349
416-1282	349
416-1284	349
416-1285	349
416-1287	349
416-1321	346
	352
416-1322	346
	352
416-1323	346
416-1324	346
416-1325	346
	352
416-1916	229
	▶263
416-2319	230
	235
416-4309	889
416-6996	322
	▶466
416-6998	322
	▶468
416-7151	84
416-7727	72
417-6660	235
417-8207	▶307
	310
417-8237	313
417-8264	908
417-8265	307
	▶908
417-8472	▶555
	747
417-8475	▶557
	747
417-9197	▶559
417-9199	▶561
417-9200	▶563
417-9209	▶565
417-9326	▶404
417-9328	▶405
417-9331	▶407
417-9916	▶409
417-9917	▶410
417-9919	▶412
417-9966	▶845
417-9967	▶401
418-0020	▶414
	621
	622
418-0023	▶426
	621
418-0024	▶446
	622
418-0908	▶428
418-0909	▶449
418-0910	▶416
	622
418-0911	▶430
	622
418-0912	▶452
	622
418-1194	▶474
	621
418-1196	619
	620
	621
	▶644
418-8379	900
418-8587	621
	▶635
418-8616	235
418-8739	625
	▶630
418-8767	▶567
418-8768	2
	3
	4
	▶569
419-1550	756
419-1551	756
419-5484	401
	▶625
419-6583	54
	▶67
419-6584	67
419-6587	54
	▶64
419-6590	64
419-6591	61
419-6592	61
420-0454	47
420-2371	75
	76
420-3151	▶842
	843
420-9020	▶401
421-1952	677
421-7486	769
422-7715	71
422-9120	349
422-9122	349
422-9765	4
	▶175
423-1982	61
423-3064	676
423-8892	2
	3
	4
	873
424-0566	337
424-3214	337
424-4322	132
424-6681	776
425-0196	6
	▶337
425-0197	6
	▶43
425-3925	2
	3
	4
	▶619
425-7003	896
425-7079	842
425-7103	28
425-9130	2
	3
	4
	▶725
425-9134	▶619
426-0345	▶747
426-2237	804
426-2260	896
426-2265	804
	▶899
426-2266	804
	▶900
426-2267	804
	▶889
426-2268	804
	▶892
426-2269	804
	▶894
426-2270	▶804
426-2271	896
426-2273	874
426-2274	866
	▶874
426-2275	▶864
	866
426-2549	▶747
426-2550	▶322
426-2551	2
	3
	4
	▶322
426-3898	900
426-3899	899
426-3987	▶247
426-4076	84
427-8445	804
	▶896
427-8448	804
	▶843
427-8462	804
	▶875
427-8468	894
427-8470	894
427-9771	184
427-9783	▶747
428-6872	263
428-6873	263
428-6874	263
428-6875	263
428-6876	263
428-6877	264
428-6878	264
428-6879	264
428-6880	264
428-6881	264
428-6882	266
428-6883	266
428-6884	266
428-6885	266
428-6886	266
428-6887	266
428-7042	337
430-4055	892
430-4057	889
430-4119	903
430-6686	337
430-9488	▶375
	597
430-9491	375
431-7217	▶535
	620
431-9082	847
431-9095	847
431-9097	▶125
	804
431-9098	125
	▶195
431-9108	125
	▶197
	▶199
431-9110	125
	▶855
431-9113	855
431-9114	855
432-2226	848
432-5826	875
432-6061	617
432-8162	592
	▶601
432-8257	5
	▶592
432-8567	▶597
	601
432-8723	88
	90
433-0190	87
433-1316	▶87
	88
	90
433-1658	804
	▶905
433-2039	337
433-6858	470
	472
433-6909	470
434-2703	845
	846
	▶847
434-3071	472
434-4637	545
434-4887	545
434-6242	▶759
	905
434-6243	905
434-6244	905
434-6269	470
434-6270	472
434-6271	472
434-9163	889
435-1875	470
435-2835	544
435-2836	544
435-2837	544
435-3441	725
	▶911
435-3504	725
	▶912
435-4340	759
436-0521	40
436-1901	842
436-7781	34
436-8723	247
	248
	▶251
436-8724	247

▶ PRIMARY REFERENCE

PART NUMBER INDEX

Part	Page
	248
	▶252
436-8725	251
	252
	▶253
436-8726	251
	252
	▶254
437-0420	191
437-2594	929
437-4170	75
	76
438-4951	903
438-4952	903
438-4953	903
438-4954	903
438-4955	903
438-4956	903
438-4957	903
438-4958	903
438-5685	900
438-6960	264
439-0479	597
	▶691
439-0481	691
	▶693
439-1840	84
439-5037	80
439-5039	80
439-5040	80
440-2105	▶118
	119
	150
440-5314	776
440-5315	776
441-0100	▶5
441-8129	366
	368
	373
442-0106	488
442-0107	488
442-0109	383
442-0110	383
442-0111	383
442-0209	253
	254
442-1579	84
442-7199	▶123
	154
442-7756	850
	852
442-8384	850
	852
442-8385	845
	846
	▶850
	▶852
443-1358	▶388
	617
443-1359	488
443-1362	383
443-1365	531
443-1366	495
443-1773	693
443-2196	399
443-6229	597
443-6345	689
443-7071	397
443-7807	2
	▶248
443-8460	150
	152
443-8462	154
443-9076	28
444-2190	34
444-3851	▶848
444-5015	84
444-5016	84
444-5022	▶80
	84
444-6530	175
444-7604	143
445-0071	6
	▶124
445-2355	2
	3
	4
	▶401
445-2651	388
445-5511	80
446-0105	80
446-0274	6
	▶177
446-1270	177
446-2727	▶725
446-2738	▶620
446-2745	▶620
446-6728	5
	▶6
446-7142	▶719
	721
446-7144	▶720
	721
446-7944	776
447-9379	900
448-4180	463
448-4181	463
448-4217	15
448-4218	15
448-4220	15
448-4222	15
448-4227	15
448-8494	756
448-8649	▶756
	758
448-9499	▶170
	▶171
	804
448-9500	▶172
	845
	846
448-9502	867
449-0348	▶144
	195
449-1136	▶463
	775
449-2161	▶795
449-2162	▶796
449-2686	900
449-2784	1
	▶402
449-2823	▶1
	2
	4
449-2824	▶1
449-3653	282
	▶287
449-9326	867
450-0675	▶131
	195
450-2079	1
	▶865
450-5996	34
450-8372	605
	758
	▶781
450-9772	918
451-0464	668
451-2183	743
451-7225	910
451-8019	132
452-0452	383
452-2557	488
452-5528	800
452-6051	388
452-6052	388
452-6053	388
452-6299	781
452-6951	804
	▶879
452-8547	▶78
	79
452-9669	883
452-9704	73
453-0790	95
453-3004	▶621
453-3005	▶621
453-3264	▶4
453-6400	88
	90
453-6523	361
453-7073	3
	▶112
453-7074	1
	▶919
	▶924
453-7111	1
	▶243
453-7132	322
	▶758
453-7163	6
	▶79
453-8180	2
	3
	4
	▶804
453-8185	▶2
453-9677	7
454-2118	2
	3
	4
	▶621
454-2122	▶622
454-2126	▶622
454-2129	▶622
454-2156	1
	▶310
454-3395	1
	▶301
454-3396	▶282
	301
454-5109	95
454-6847	879
454-6848	879
	▶886
454-6849	879
454-6850	879
454-6851	879
454-6853	879
454-6854	879
454-6856	879
454-6858	879
454-6859	879
454-6860	879
454-6861	879
454-6862	879
454-6863	879
454-6864	886
454-6865	886
454-6866	886
454-6867	886
454-6869	886
454-6870	886
454-6872	886
454-6873	886
454-6874	886
454-6875	886
454-6876	886
454-6877	886
454-7364	1
	▶54
454-7365	54
	▶61
454-7381	61
454-7382	61
454-8156	2
	3
	4
	▶748
454-8880	322
	▶758
455-0466	74
455-0704	134
	141
	143
455-0705	134
	141
	143
455-0707	134
	141
455-0708	134
	136
455-0709	132
	136
	141
455-3909	▶775
455-3910	▶775
455-4365	919
	924
455-4589	725
	▶734
455-4590	734
455-4591	725
	▶735
455-4592	735
	▶737
455-4595	758
	▶782
455-4596	782
	▶784
455-4597	322
	▶605
455-6806	845
455-6807	845
455-9337	725
	▶738
455-9338	738
	▶739
455-9568	132
455-9584	126
456-5832	▶475
	619
	620
456-5833	620
	▶638
456-5834	619
	620
	▶646
456-5835	620
	▶640
457-4857	▶402
458-3267	776
458-3274	776

▶ PRIMARY REFERENCE

PART NUMBER INDEX

Part	Page
458-3275	776
458-3400	26
458-3745	212
458-6572	115
458-8357	76
459-1889	846
459-1890	846
461-1538	139
461-3502	288
461-3503	288
461-3504	288
461-4392	▶846
461-5997	523
	▶686
461-6000	402
	▶523
461-6011	686
	▶721
462-1171	42
462-2235	184
462-6685	6
	▶47
463-1603	776
463-8753	3
	▶288
463-8754	288
463-8765	288
463-8766	288
463-8767	288
464-3050	249
	▶255
	▶256
464-3051	249
	▶257
	▶258
464-3052	255
	256
	257
	258
	▶259
464-3053	255
	256
	257
	258
	▶259
464-3054	259
464-3055	256
	258
	262
465-6315	777
466-4849	34
466-8140	▶765
466-8424	▶764
	765
466-8425	764
	▶769
466-8426	769
466-8427	769
466-9070	1
	▶799
466-9071	799
	▶808
466-9072	808
466-9073	58
466-9074	54
	▶58
466-9092	799
	▶810
466-9093	1
	▶799
469-6441	808
	▶812
470-8038	34
470-8101	15
470-8171	15
471-0607	▶418
471-0610	▶420
471-0613	▶422
472-3500	▶589
	619
	620
472-3510	▶590
	619
	620
473-0868	288
473-2841	▶3
473-2842	3
	▶249
473-4932	282
	▶309
473-4933	309
473-4934	309
473-6336	364
473-7004	881
474-1553	49
475-0019	777
475-2030	3
	▶929
475-2048	301
	▶614
475-2049	614
	▶617
475-2050	402
	▶488
475-2051	402
	▶580
475-2052	▶383
	580
475-2053	402
	▶531
475-2054	54
	▶495
475-4069	2
	3
	4
	▶100
475-5469	793
475-5470	794
475-5473	792
476-0305	197
	199
476-0308	▶132
	199
476-2947	96
476-7093	777
476-9318	121
	122
478-6537	5
	▶74
478-6538	74
479-3169	6
	▶88
	▶90
479-4263	322
	▶470
479-4266	322
	▶472
479-4267	▶544
	605
480-3535	▶119
	152
480-4489	34
480-4490	34
480-4491	34
481-9614	831
481-9615	▶831
	832
	833
	835
482-4529	1
	▶5
482-9790	84
483-1262	197
	199
483-3530	119
484-2773	346
	352
484-2774	346
	352
484-2777	346
	352
484-2779	346
	352
484-2780	346
	352
485-4894	63
485-4895	63
486-1633	209
490-6070	260
490-6071	▶260
	261
	262
490-6072	250
	▶261
	▶262
490-6073	4
	▶250
493-4062	▶465
	775
493-4232	465
493-7872	465
494-0436	465
495-6043	402
	▶832
498-0707	▶775
498-5766	▶150
498-5767	▶152
498-5768	150
	152
	154
499-0214	401
	▶833
499-0216	401
	▶834
499-0217	401
	▶835
5	
502-1521	154
502-1522	154
502-2115	53
502-5311	150
	152
	154
503-9590	150
	152
	154
503-9591	154
503-9592	154
510-3506	349
510-3511	352
510-9426	150
	152
	154
510-9428	▶154
517-3262	▶4
517-8243	82
527-1637	12
527-1641	12
529-8079	▶571
	747
529-8080	▶573
	748
533-1626	526
533-5428	126
533-9612	▶346
	725
533-9617	▶352
	725
533-9620	▶349
	747
	748
535-8994	90
536-7945	143
536-7946	143
539-1039	▶162
	171
539-1698	346
539-1699	346
539-1700	346
	352
539-1701	346
539-1702	346
	352
539-1703	346
539-1710	352
539-1711	352
539-1712	352
539-1713	352
539-1714	352
539-1715	349
539-1716	349
539-1717	349
539-1718	349
539-1719	349
539-1740	346
	352
539-1748	352
539-1755	346
	352
539-2806	571
	573
539-2809	▶574
	747
539-2810	▶576
	747
539-2821	574
	576
539-2823	455
	457
	460
539-6714	832
	833
	834
	▶836
539-6715	836
539-7274	33
540-3994	▶432
540-3995	▶455
540-3997	▶434
540-3998	▶457
540-4001	432
	434
	436
	438
540-4002	▶436
	622
540-4003	▶438
	621
540-4004	▶460
	622
541-1521	346
541-1523	352

▶ PRIMARY REFERENCE

PART NUMBER INDEX

Part	Page	Part	Page	Part	Page	Part	Page
541-1524	349						
545-5867	352						
549-0809	680						
556-3006	352						
558-1612	352						
560-6109	107						
560-7640	76						
564-1945	733						
566-7931	12						
568-5111	118						
568-5140	123						
579-8995	178						

► PRIMARY REFERENCE

MEMORANDA

©2019 Caterpillar
All Rights Reserved

CAT, CATERPILLAR, LET'S DO THE WORK, their respective logos, “Caterpillar Yellow”, the "Power Edge" and Cat "Modern Hex" trade dress as well as corporate and product identity used herein, are trademarks of Caterpillar and may not be used without permission.